Multipurpose Thermostats

- **Reliable**
- **Durable**
- **Accurate**
- **Robust**
- **Cost Effective**

Key Features

Automatic and manual reset

One shot (single operation device)

Environmentally protected options

Broad range of constructions

Materials to suit various applications

Thermostat Application

The correct choice of operating temperatures for a thermostat depends on many parameters. The following factors can have a significant effect on the final operating point of the application:

1. Rate of temperature rise;
2. Location of the thermostat;
3. Electrical load;
4. Mass of the thermal system;
5. Heat transfer medium (air, metal, surface, etc.)

Important Notice

The data contained in this literature is for reference information only. The user must determine the suitability of the product for their application and assumes all risk and liability associated therewith.

Operating Parameters

Dielectric strength:	2000 Vac terminal to cap
Contact resistence:	<50 m Ω, <10 m Ω also available
Standard weight:	6 grammes
Nominal voltage:	up to 24 Vdc and up to 250 Vac
Nominal current:	up to 15 Ampere

Introduction

Honeywell Elmwood's thermostat range has been developed for applications in a large number of industries including Appliance, HVAC and Automotive sectors. The control is non-electronic for incorporation, consisting of two current carrying terminals. These terminals are connected to either a fixed or moving contact. The moving contact is activated by a heat sensitive bi-metallic disc via an insulating transfer pin. The disc is fully electrically insulated from the switch chamber by the disc support. With an operating range from 0 °C to 260 °C, and a tolerancing system suited to customers' exact requirements, Honeywell Elmwood thermostats can provide an accurate solution to your temperature control requirements.

Honeywell Elmwood's 2450, 2455R, 2455RP, 2455RC and 2455RBV series of automatic reset thermostats are manufactured to either open or close at set temperatures.

The 2455RM range of manual reset thermostats has been developed for safety critical and fault condition applications where appliance isolation is required. The appliance can only be re-used when manually reset, however automatic reset may occur at temperatures of 4 °C lower.

The 2455RP series of thermostats use the polyphenylene sulphide (PPS) body material. Offering a higher application temperature of 200 °C and tracking index of PTI250, these thermostats meet the particular needs of the appliance industry and are available with all of the usual construction options.

The S35 series of one-shot (single operation device) thermostats are specifically designed as high limit devices for applications where security of micro-disconnection is mandatory.

Honeywell Elmwood thermostats are built to meet your exact specifications. Our multi-lingual Sales and Customer Service team will be only too pleased to assist.

Standard temperature characteristics

MULTIPURPOSE THERMOSTATS

Thermostat Series	Operating Temperature °C	Tolerance Open ±K	Tolerance Close ±K	Standard Differential Mean K
2450 2455R 2455RP 2455RC 2455RBV	0-25 (-10 min reset temp)	3	6	22-35
		3	5	16-22
		3	4	14-16
		3	4	11-13
		3	4	8-10
	26-95 (-10 min reset temp)	3	6	22-45
		3	5	17-22
		3	5	14-16
		3	4	11-14
		3	4	8-10
2450 2455R 2455RP 2455RC	96-120	4	7	22-45
		4	6	16-22
		4	5	14-16
		4	4	11-14
		3	4	8-11
	121-150	4	8	22-45
		4	6	16-22
		4	5	14-16
	151-170	8	11	39-45
		6	11	34-39
		6	8	28-33
		6	7	22-27
2455RP 2455RC	171-186	14	14	51-56
		11	11	39-50
		8	11	28-39
2455RC ONLY	187-235	14	25	51-56
		14	14	51-56
		11	11	39-50
		8	11	28-39
	236-260	14	25	34-56
		14	14	31-56
		11	11	28-50

MANUAL RESET THERMOSTATS

Thermostat Series	Operating Temperature °C	Tolerance Open Only ±K
2455RM	50-90	5
		4
	91-120	6
		5
		4
	121-150	7
		6
		5

ONE-SHOT THERMOSTATS
Automatic reset below -35 °C

Thermostat Series	Operating Temperature °C	Tolerance Open Only ±K
2450-S35 2455R-S35 2455RP-S35 2455RC-S35	52-93	5
	94-121	6
	122-149	7
	150-170	8
2455RP-S35 2455RC-S35	171-186	10
2455RC-S35	187-204	10
	205-232	11
	233-260	14

THERMOSTAT SERIES	2450	2455R	2455RC	2455RBV	2455RM	2455RP	2455R-S35	2455RP-S35	2455RC-S35
Base material	Phenolic	Phenolic	Ceramic	Phenolic	Phenolic	Polyphenylene Sulphide	Phenolic	Polyphenylene Sulphide	Ceramic
Ambient temp	-30 to 150 °C	-30 to 150 °C	-20 to 290 °C	-20 to 100 °C	-20 to 150 °C	-20 to 200 °C	-30 to 150 °C	-20 to 200 °C	-20 to 290 °C
Operating temp	0 to 150 °C	0 to 150 °C	0 to 260 °C	0 to 95 °C	50 to 150 °C	0 to 186 °C	52 to 150 °C	52 to 186 °C	52 to 260 °C
Characteristic	low profile	standard	high temperatures	splash proof	manual reset	standard tracking index 250 V	one-shot	one-shot tracking index 250 V	one-shot
Electrical approvals	Contact factory for current listings of BEAB, VDE, UL, CSA, KEMA, DEMKO, NEMKO, SEMKO, UTE, OVE, SEV, and BS EN60730-2-9 approvals.								

Standard Terminal and Bracket Guide (All dimensions in mm for reference only)

Standard Sizes

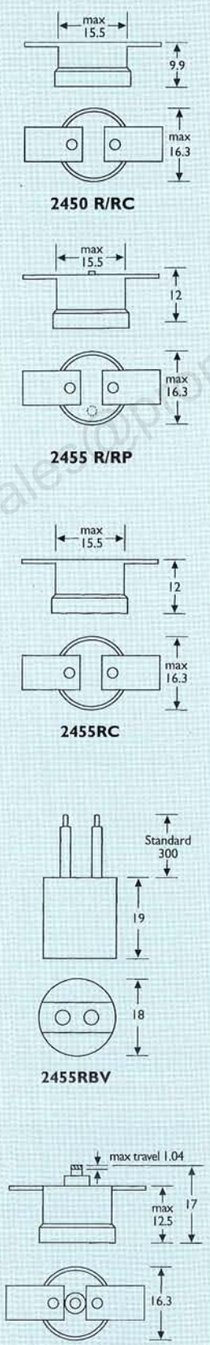

Standard Terminals

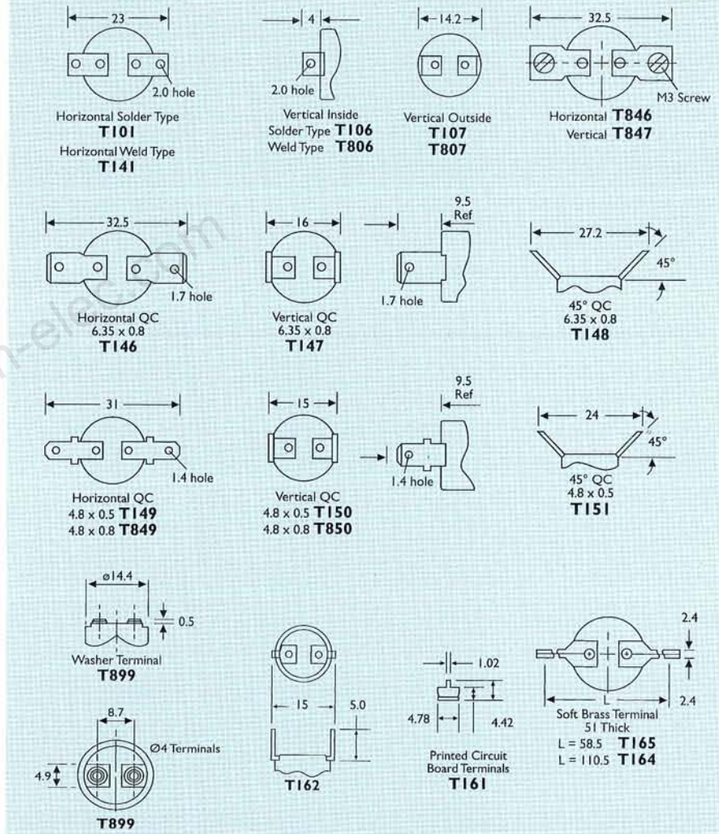

Bracket/Terminal Orientation
Standard Tolerance ± 6°

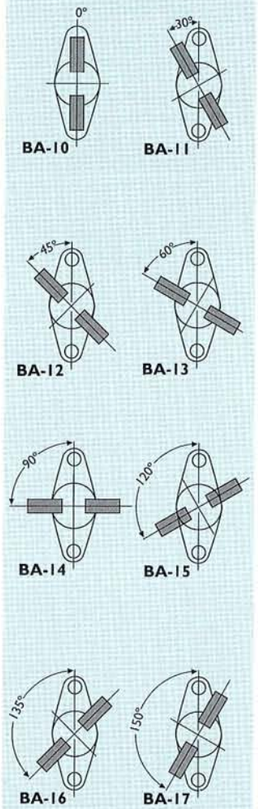

Screw and Stud Fixings

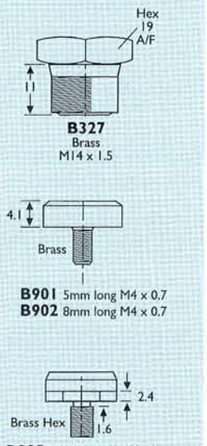

Mounting Brackets

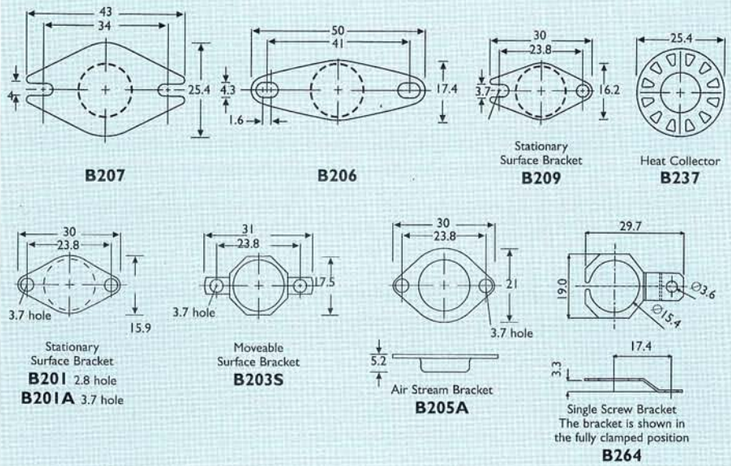

ООО Промэлектроника sales@prom-elec.com