Honeywell

C7027A, C7035A, C7044A, C7927A Minipeeper® Ultraviolet Flame Detectors

PRODUCT DATA

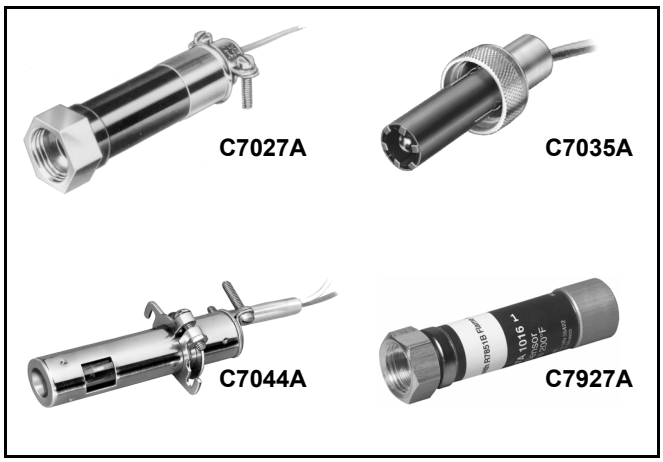

APPLICATION

The C7027A, C7035A, C7044A and C7927A Minipeeper® Ultraviolet Flame Detectors detect the ultraviolet radiation emitted by combustion flames. The flame detectors are used with Honeywell flame safeguard controls to provide flame supervision for gas, oil, or combination gas-oil burners.

FEATURES

- **C7027A, C7035A, and C7044A Flame Detectors are used with RA890G devices or R7249A, R7290A, R7749B and R7849A,B Amplifiers and the appropriate Honeywell controls.**
- **C7927A is used with only the R7851B Flame Amplifier and the 7800 SERIES controls.**
- **C7044A may also be used with the following 50 Hz Honeywell combustion controls/amplifiers:**
  - **— R4341/R7323**
  - **— R4343/R7323**
  - **— R4344/R7323**
- **C7027A/C7927A has an integral collar threaded (internal 1/2-14 NPSM) for mounting on a one-half-inch sight pipe.**
- **C7035A has an integral collar threaded (internal 1-11-1/2 NPSM) for mounting on a one-inch sight pipe.**
- **C7035A housing meets Underwriters Laboratories Inc. requirements for rain tightness and complies with NEMA enclosure standards, types 4 and 4X.**
- **C7044A mounts with a two screw bracket. The UV sensor tube is enclosed in a stainless steel housing.**
- **C7044A has the capability of side or end viewing in flame monitoring applications.**
- **Because of its compact size, the C7044A is particularly suitable for blast tube mounting.**
- **Properly installed, the C7027A, C7035A and C7927 are pressure rated for 5 psi.**
- **C7035A ultraviolet radiation sensor tube is field replaceable.**
- **Two C7027A, C7035A or C7044A Flame Detectors can be wired in parallel for difficult flame sighting installations. (C7927cannot be used in parallel.)**
- **C7927A, C7027A1049, C7027A1064, C7027A1072 come with 1/2-in. spud connection for electrical wiring.**

Contents

Application 1
Features 1
Specifications 2
Ordering Information 2
Wiring (All Models—Fig. 9) 8
Adjustments and Checkout 9
Troubleshooting 12
Maintenance 12

60-2026-14

SPECIFICATIONS

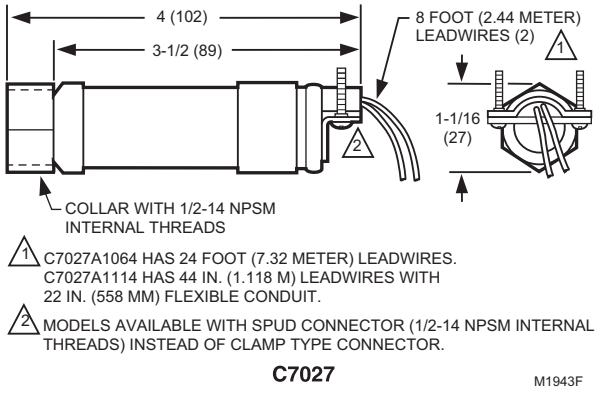

Fig. 1. Installation dimensions of C7027A in in. (mm).

C7027A Minipeeper® Ultraviolet Flame Detector:

Ambient Operating Temperature Ratings: 0°F to 215°F (-18°C to 102°C), or -40°F to 215°F (-40°C to +102°C), depending on model.

Maximum Pressure Rating: 5 psi (34.5 kPa).

Mounting: Collar with 1/2-14 NPSM internal threads for mounting on a 1/2 in. sight pipe.

Wiring Connections: Two 8 ft (2.44 m), color-coded, Plastic-insulated, 18 AWG, NEC Class 1 leadwires, rated for 221°F (105°C). (C7027A1064 has 24 ft [7.32 m] leadwires.) Rear of detector has a clamp type connector for 1/2 in. flexible metallic conduit. (Models are available with 1/2 in. internally threaded spud connector instead of the clamp). C7027A1114 has 44 in. (1.118 m) leadwires and 22 in. (558 mm) flexible conduit.

Dimensions: See Fig. 1.

Replacement Part: 129685 Flange Gasket.

NOTE: The ultraviolet radiation sensing tube is not field replaceable.

Accessory:

136733 Heat Block, laminated plastic, insulating the flame detector from sight pipe temperatures up to 266°F (130°C), 1/2-14 NPSM external threads on one end and 1/2-14 NPSM internal threads on the other end (see Fig. 7). Included with C7027A1080.

390427B Bushing, for mounting to 3/8 in. sight pipe. Included with C7027A1080.

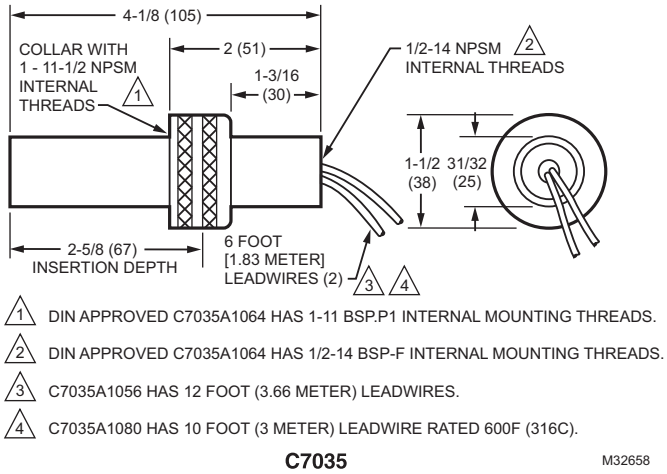

Fig. 2. Installation dimensions of C7035A in in. (mm).

ORDERING INFORMATION

When purchasing replacement and modernization products from your TRADELINE® wholesaler or distributor, refer to the TRADELINE® Catalog or price sheets for complete ordering number.

If you have additional questions, need further information, or would like to comment on our products or services, please write or phone:

1. Your local Honeywell Automation and Control Products Sales Office (check white pages of your phone directory).
2. Honeywell Customer Care
   1885 Douglas Drive North
   Minneapolis, Minnesota 55422-4386
3. http://customer.honeywell.com or http://customer.honeywell.ca

In Canada—Honeywell Limited/Honeywell Limitée, 35 Dynamic Drive, Toronto, Ontario M1V 4Z9.
International Sales and Service Offices in all principal cities of the world. Manufacturing in Australia, Canada, Finland, France, Germany, Japan, Mexico, Netherlands, Spain, Taiwan, United Kingdom, U.S.A.

C7035A Minipeeper® Ultraviolet Flame Detector:

Flame Detection: End viewing.

Ambient Operating Temperature Ratings: 0°F to 250°F (-18°C to +121°C), or -40°F to 250°F (-40°C to +121°C), depending on model.

Maximum Pressure Rating: 5 psi (34.5 kPa).

Mounting: Collar with 1-11-1/2 NPSM internal threads for mounting on a 1 in. sight pipe. (The DIN approved C7035A1064 has 1-11 BSP.P1 threads.)

Wiring Connections: Two 6 ft. (1.83 m), color-coded Silicon Rubber Insulated 18 AWG, NEC Class 1 leadwires rated for 302°F (150°C).
The rear of the detector has 1/2-14 NPSM internal threads for connecting to a conduit. The DIN-approved C7035A1064 has 1/2-14 BSP-F threads.
C7035A1056 has 12 ft (3.66 m) leadwires.
C7035A1080 has 10 foot (3 Meter) leadwire rated for 600°F (316°C).

Dimensions: See Fig. 2.

Replacement Parts:
129808 Flange Gasket.
129464M Ultraviolet Sensing Tube, 0°F to 250°F (-18°C to +121°C).
129464N Ultraviolet Sensing Tube, -40°F to +250°F (-40°C to 121°C).

C7027A, C7035A AND C7044:
Approvals:
Underwriters Laboratories Inc. listed: File No. MP268.
Canadian Standards Association certified: Master Report LR 95329-1.
Factory Mutual approved.
Swiss Re (formerly Industrial Risk Insurers) acceptable.
DIN approved models: C7027A1056, C7035A1049, C7035A1064.

General Accessories:
118367A Swivel Mount; provides adjustable positioning of the C7027A or C7035A.
204342 Ultraviolet mirror, 3/4 in. NPT.
105172C Seal off adapter, 3/4 in. NPT.

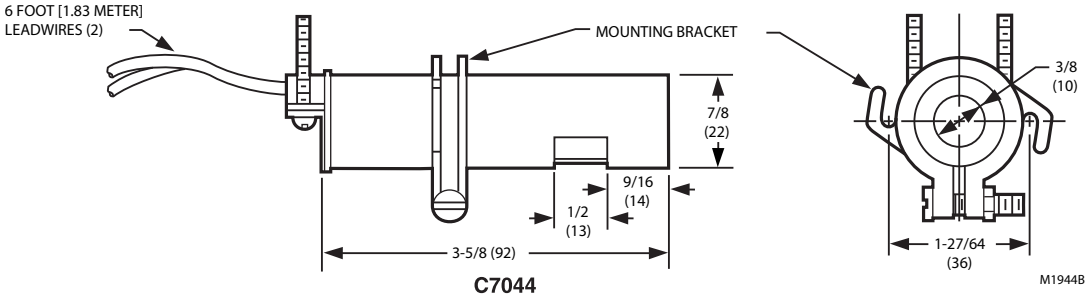

Fig. 3. Installation dimensions of C7044A in in. (mm).

C7044A Minipeeper® Ultraviolet Flame Detector:

Flame Detection: Housing has two openings to permit either side or end viewing. Side viewing is 1/8 as sensitive as end viewing.

Mounting: Bracket (included in 4074BVK Bag Assembly), secured by two 8-32 RHIS (European M-4) screws (not included).

Wiring Connections: Two 8 ft. (2.44 m) color-coded, plastic coated 18 AWG, NEC Class 1 leadwires. Rear of detector has a clamp type connector for 1/2 in. flexible metallic conduit.

Dimensions: See Fig. 3.

C7927A Minipeeper® Ultraviolet Flame Detector:

Ambient Operating Temperature Ratings:
C7927A1016: -40°F to +200°F (-40°C to +93°C).

Storage Temperature Rating: -20°F to +120°F (-28°C to +49°C).

Maximum Pressure Rating: 5 psi (34.5 kPa).

Mounting: Collar with 1/2-14 NPSM internal threads for mounting on a 1/2 in. (13mm) sight pipe.

Wiring Connections: Two 8 ft. (2.4 m) color-coded, plastic coated 18 AWG, NEC Class 1 leadwires. Rear of detector has a 1/2-in. spud-type connector.

Dimensions: See Fig. 4.

Approvals:
Underwriters Laboratories Inc. (cUL), MP268, Volume 30 and 31.
Factory Mutual (FM) Approved, report number 3011020, June 26, 2002.

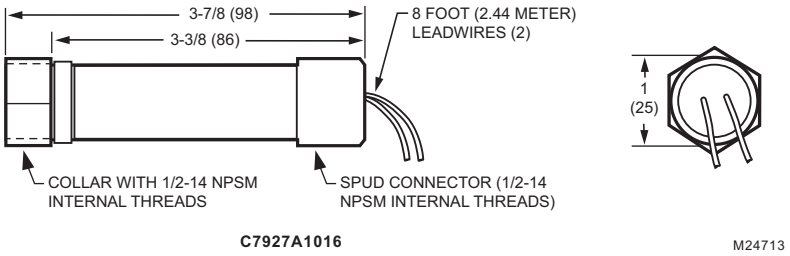

Fig. 4. Installation dimensions of C7927A1016 in in. (mm).

INSTALLATION

When Installing This Product...

1. Read these instructions carefully. Failure to follow them could damage the product or cause a hazardous condition.
2. Check the ratings given in the instructions and on the product to make sure the product is suitable for your application.
3. Installer must be a trained, experienced, flame safeguard control technician.
4. After installation is complete, check out product operation as provided in these instructions.

Disconnect power supply before beginning installation to prevent electrical shock and equipment damage. All wiring must comply with applicable electrical codes, ordinances and regulations. Use NEC Class 1 wiring.

IMPORTANT

The C7027, C7035, and C7044 ultraviolet radiation sensing tubes have a life expectancy of 40,000 hours of continuous use within the flame detector's specified ambient temperature and voltage ratings. When an ultraviolet radiation sensing tube wears out, the UV sensor will fail to properly discriminate between flame conditions.

The C7027A, C7035A, C7044A and C7927 Flame Detectors should only be used on burners that cycle on/off or, in the absence of cycling, are periodically checked for proper operation following the application instructions provided by the equipment manufacturer.

Recommended industry standards for the frequency of sensor checks, either through cycling (employing safe-start check methods) or periodic maintenance. If uncertain, industry guidelines suggest one burner cycle in a 24-hour period.

Consult the equipment manufacturer or the governing standard for recommendations about frequency of checks.

Controls incorporating safe-start checks, and sensors and controls employing constant check means are available from Honeywell. See your Honeywell representative for specific information.

⚠ WARNING

Explosion Hazard and Electrical Shock Hazard. Can cause serious injury, death or property damage.

1. The C7027A, C7035A, C7044A and C7927 Flame Detectors must be used with Honeywell flame safeguard controls (primaries, programmers, and burner management systems). Using with controls not manufactured by Honeywell could result in unsafe conditions.
2. Disconnect power supply before beginning installation to prevent electrical shock or equipment damage, more than one disconnect may be involved.
3. Read the installation instructions before starting the installation.
4. All wiring must be NEC Class 1 (line voltage).
5. The flame detector must be positioned so that it sights the flame and does not respond to the UV radiation emitted by sparks generated by a spark ignitor. The Q624A or Q652B Solid-State Ignitor may be useful in difficult installations.

Basic Requirements For Ultraviolet Detector Installations

All flames emit ultraviolet radiation, invisible to the human eye but detected by the UV sensing tube. There are two important factors in UV detector installation:

The detector must have a line-of-sight view of the flame.

The detector must not be exposed to other sources of ultraviolet radiation, the most common being ignition spark. Other sources are listed in the next section.

Because it is necessary for the detector to actually see the flame, it is desirable to locate the detector as close to the flame as physical arrangement and temperature restrictions permit.

Sighting requirements for different types of flame supervision are:

1. Pilot flame only—Sighting must be along the axis of the pilot flame. The smallest pilot flame that can be sighted must be capable of igniting the main burner (see Pilot Turndown Test, page 10).
2. Main flame only—Sighting must be at the most stable part of the flame for all firing rates.
3. Pilot and main flame—Sighting must be at the junction of both flames.

Other Radiation Sources Sensed By The UV Detector

Examples of radiation sources (other than flame) that could actuate the detection system are:

1. Ultraviolet Sources:
   a. Hot refractory above 2500°F (1371°C); C7927 - 1800°F (982°C).
   b. Spark.
   c. Ignition transformers.
   d. Welding arcs.
   e. Lightning.
   f. Gas lasers.
   g. Sun lamps.
   h. Germicidal lamps.

   In Addition for the C7927:
   a. Solar Radiation
   b. Bright incandescent or fluorescent artificial light.
   c. Bright flashlight held close to the sensing tube.
2. Gamma Ray and X-ray Sources:
   a. Diffraction analyzers.
   b. Electron microscopes.
   c. Radiographic X-ray machines.
   d. High voltage vacuum switches.
   e. High voltage condensers.
   f. Radioisotopes.

Except under unusual circumstances, none of these sources except hot refractory and ignition spark would be present in or near the combustion chamber.

The UV detector may respond to hot refractory above 2500°F (1371°C) [1800°F (982°C) for C7927] if the refractory surface represents a significant percentage of the field of view of the detector. If the temperature of the hot refractory causes the flame relay (in the flame safeguard control) to pull in, re-position the sight pipe so the detector views a cooler area of the refractory.

Ignition spark is a source of ultraviolet radiation. When installing the UV Flame Detector, make sure it does not respond to ignition spark (see Ultraviolet Response Test, page 11.)

For C7027A, C7035, and C7044A applications whose response to ignition spark cannot be avoided, the Q624A or Q652B Solid-State Ignition Transformer may eliminate the ignition spark response. The Q624A or Q652B, when properly installed, prevents C7027A, C7035A and C7044A ignition spark response by alternately activating the spark generator and the UV sensing tube.

Mounting a C7027A, C7927 or C7035A

Locate the Sight Pipe

The location of the sight pipe is the most critical part of the installation. A black iron pipe is recommended. Do not use a stainless steel or galvanized pipe because its internal surface blackens with use as deposits from the combustion chamber settle on it. Initially, its shiny internal surface reflects ultraviolet radiation, which could result in a satisfactory flame signal, even though the pipe may be improperly located. As it blackens, less ultraviolet radiation is reflected and the flame signal may become marginal.

Under optimum sighting conditions, the C7027A, C7927 and C7035A Flame Detectors can detect most common gas and oil combustion flames at a distance of six feet. The critical factors in determining the flame-detector distance separation are the optimized flame signal (current or voltage) and the flame detector temperature. Other factors may be influential and are associated with the specific installation. For minimum flame signals, see Table 1 and for ambient operating temperatures, refer to Specifications, page 2.

Use 1/2 in. pipe for a C7027 or C7927, and 1 in. pipe for a C7035. Since no two situations are likely to be the same, length and sighting angle of the pipe must be determined at the time and place of installation. Generally, it is desirable to have the sight pipe tilting downward to prevent soot or dirt buildup.

If a C7027A or C7927A is to be used for a blast tube installation, its location should be determined by the burner manufacturer; contact the manufacturer before making any modifications to the installation.

In locations where water is usually sprayed on the body of the detector, use a C7035A. Internal threads in its base permit the use of waterproof flexible conduit for this type of application.

Prepare Hole In Wall Of Combustion Chamber

Cut a hole of the proper diameter for the sight pipe in the wall of the combustion chamber at the selected location. Flare the hole to leave room for small adjustments of the sighting angle. The taper of the hole should be about 1 in. for every 3 in. (25 mm for every 76 mm) of wall thickness.

Mounting The Sight Pipe (Fig. 5)

Thread one end of the pipe to fit the mounting collar on the detector. Cut the pipe to the desired length (as short as practicable), and at an angle so it fits flush with the wall of the combustion chamber. Tack-weld the pipe to the wall in a trial position. Do not permanently weld the sight pipe in place until after completing the Adjustments and Checkout beginning on page 9.

NOTE: If you use a swivel mount (part no. 118367A) and you are positive about the location and sighting angle, you can permanently weld the pipe.

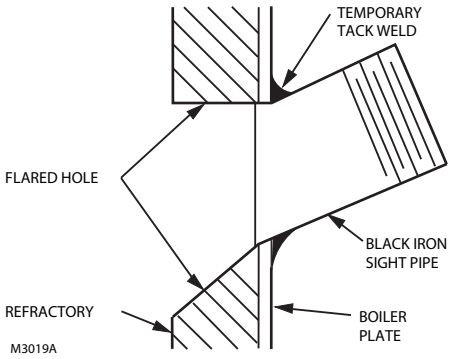

Fig. 5. Mounting sight pipe.

Sight Pipe Ventilation

It may be necessary to ventilate the sight pipe to cool the flame detector or to clear the sight pipe of UV radiation absorbing substances such as smoke, excessive moisture or, in some instances, unburned fuel.

For a negative pressure combustion chamber, drilling a few holes in the section of the sight pipe outside of the combustion chamber will allow air at atmospheric pressure to flow through the sight pipe into the chamber. A perforated pipe nipple between the sight pipe and the detector can also be used (see Fig. 6).

For a positive pressure combustion chamber, connect a supply of pressurized air from the burner blower through the sight pipe into the chamber. The supply air pressure must be greater than the chamber pressure.

Swivel Mount

To facilitate proper sighting of the flame, a swivel mount (part no. 118367A) is available. The swivel mount will require a 3/4 to 1/2 in. reducer and a 1/2 in. close nipple to mount a C7027A or C7927, or a 1 in. pipe at least 2-1/2 in. (63.5 mm) long to mount a C7035A. For mounting details, refer to form 60-0361 for the 118367A Swivel Mount.

Mount The Detector (Fig. 6)

Mount the detector onto the sight pipe, pipe tee, nipple, or other fitting. Make sure the flange gasket is in place inside the mounting collar on the detector, and then screw the collar onto the sight pipe or fitting.

NOTE: If a window is installed between the UV detector and the flame, it must be fabricated from quartz or fused silica. Ordinary glass filters out ultraviolet radiation.

Using a Heat Block With a C7027 or C7927 (Fig. 7)

If the temperature of the sight pipe will become high enough to cause the C7027A or C7927 to overheat (above 215°F (102°C) up to 266°F (130°C), screw a 136733 Heat Block (order separately) onto the sight pipe before mounting the detector.

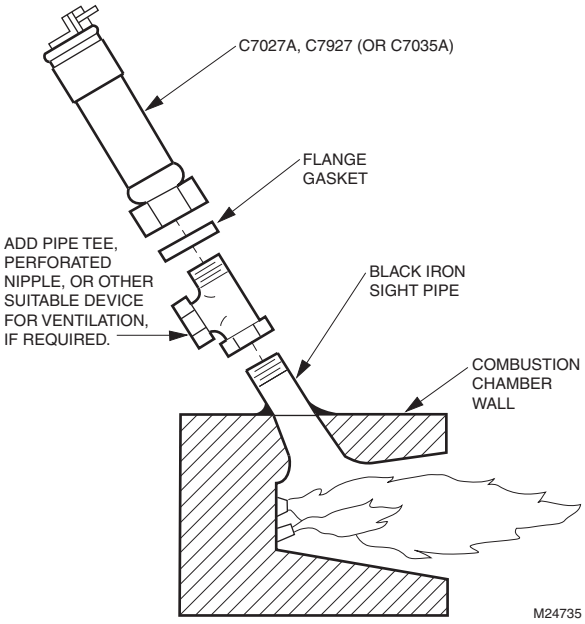

Fig. 6. Mounting a C7027A or C7927A on a combustion chamber (viewed from above). C7035A mounting is similar.

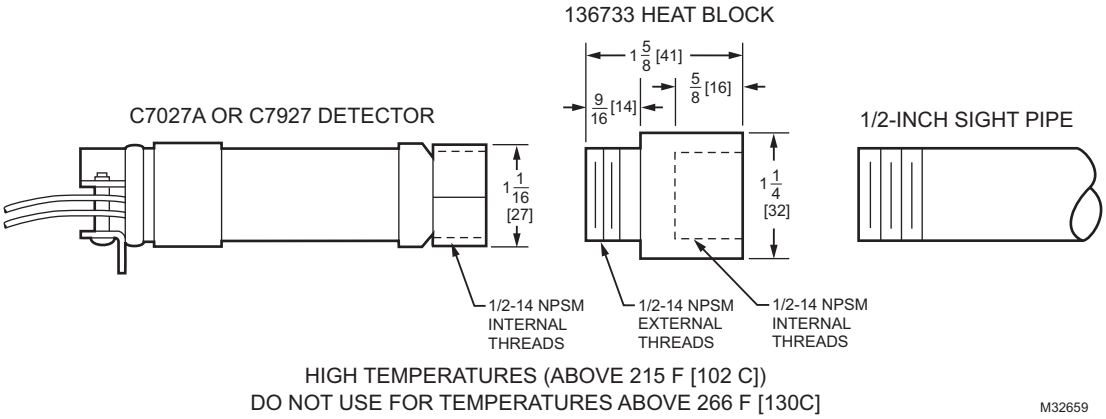

Fig. 7. Mounting dimensions of 136733 Heat Block in in. (mm).

Mounting a C7044A On a Blast Tube (Fig. 8)

The C7044 is designed to be mounted on the blast tube of a burner. The exact location should be determined by the burner manufacturer. Contact the manufacturer before making any modifications to the installation.

⚠ WARNING

Explosion Hazard.
Can cause serious injury or property damage.
The C7044 will allow air leakage through its housing. Do not locate the C7044 in an atmosphere of fuel vapors under positive pressure. The C7027, C7035 or C7927 should be used if internal pressure seal-off is required.

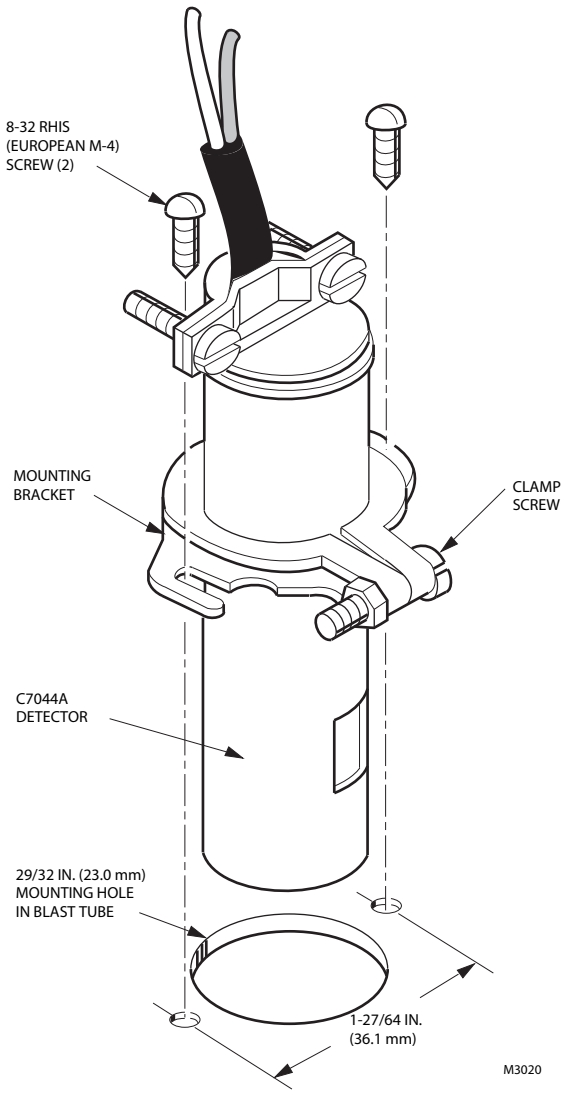

Fig. 8. Mounting C7044A Detector on blast tube.

The C7044 is mounted in a 29/32 in. (23.0 mm) hole in the blast tube. The mounting bracket is fastened to the blast tube with 2 screws on 1-27/64 in. (36.1 mm) centers.

The mounting bracket is designed so that the detector can be removed from the blast tube for cleaning and then replaced without disturbing the sighting angle. Loosen the 2 screws holding the bracket to the blast tube, but do not loosen the clamp screw on the bracket. Twist both the bracket and detector to remove them.

WIRING (ALL MODELS—FIG. 9)

⚠ CAUTION

Equipment Damage Hazard.
Can cause improper operation.
The blue leadwire must be connected to the F terminal of the flame safeguard control subbase or terminal strip and the white to the G terminal (see Fig. 9). Failure to observe the circuit polarity by reversing the leadwires (even momentarily) may cause the flame detector to improperly supervise the combustion flame.

IMPORTANT

All wiring must comply with applicable local electrical codes, ordinances and regulations. Use NEC Class 1 wiring.

The detector has color-coded leadwires. See “Specifications” on page 2 for details.

1. Keep the flame signal leadwires as short as possible from the flame detector to the terminal strip or wiring subbase. Capacitance increases with wire length, reducing the signal strength.

NOTE: The maximum permissible leadwire length depends on the type of leadwire and the conduit type and diameter. The ultimate limiting factor in flame signal leadwire length is the signal current or voltage at the flame safeguard device. See Table 1.

2. If needed, splice detector leadwires for longer leadwire runs, observing the following considerations:
   a. Make required splices in a junction box.
   b. Use moisture-resistant no. 14 wire suitable for at least 167°F (75°C).
   c. For high temperature installations, use moisture-resistant no. 14 wire selected for a temperature rating above the maximum operating temperature.
   d. F and G wires must be run in their own conduit independent of other power carrying leadwires. More than one scanner F and G wire can be run in the same conduit.
   e. A shielded twisted pair wire may be substituted for using conduit for routing the F leadwire. Be advised of the capacitance per foot of shielded wire effectively reduces the flame signal at the flame safeguard device. Be sure to ground the shield to the G terminal at the flame safeguard wiring subbase.
   f. The detector wires need to be run in their own conduit as well, avoiding other electrical noise carrying wiring.
   g. The scanner wires should remain separated a minimum of two in. (51 mm) from other line voltage wires in the main control panel to the flame safeguard device.
3. Avoid installation considerations that can influence detector operation and maximum leadwire length, such as:
   a. Moisture.
   b. Ignition interference.
   c. High resistance connections—poor grounds.
   d. Leadwire capacitance.
   e. Voltage fluctuations.
   f. Induced line transients.
   g. Floating grounds—ground at some voltage above earth ground.

h. No G wire—burner used as ground.
i. Detector output less than maximum attainable for the installation (inadequate sighting.

IMPORTANT:
Do not run the flame detector wiring in the same conduit with high voltage ignition transformer wires.

Connecting Detectors In Parallel (C7927 Can Not be Used in Parallel)

For a flame that is difficult to sight, using two flame detectors connected in parallel will reduce the occurrence of nuisance shutdowns. If only one of the parallel detectors loses the flame signal, the other will continue to indicate the presence of the flame and keep the burner in operation.

When the flame detectors are connected in parallel, the low level background signals are additive. Therefore, no more than two C7027A, C7035A, or C7044A Flame Detectors should be paralleled. Furthermore, the background signal increases as temperature decreases. Because of this, the minimum ambient operating temperature must be increased when the C7027A, C7035A or C7044A Flame Detectors are paralleled. (C7927 can not be used in parallel.)

When using detectors rated for a minimum of 0°F (-18°C), limit the minimum ambient temperature at the detectors to 32°F (0°C). When using detectors rated for a minimum of -40°F (-40°C), limit the minimum ambient temperature at the detectors to -10°F (-23°C).

Connect the blue leadwires of both detectors to the F terminal of the wiring subbase or terminal strip, and the white leadwires of both detectors to the G terminal, as shown in Fig. 9.

Earth Ground

The detector and the flame safeguard control must be connected to earth ground. A convenient method of accomplishing this is to connect the detector to the flame safeguard control with a flexible conduit, or ensure a good ground connection at the mounting bracket.

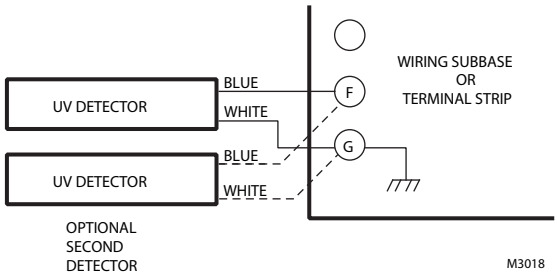

Fig. 9. Wiring C7027A, C7035A, and C7044A flame detectors in parallel.

ADJUSTMENTS AND CHECKOUT

Before welding the C7027A, C7927A or C7035A sight pipe in its final location, or before tightening the C7044A clamp screw, complete both the adjustments and checkout tests that follow and any required by the burner manufacturer.

UV Sensor Tube Test

NOTE: For initial burner lightoff, consult the burner manufacturer instructions or the instructions for the flame safeguard control.

During the initial burner lightoff, make sure the flame safeguard control starts (i.e., the load relay, usually 1K, pulls in). If it does not start, visually check the sensing tube in the C7027A, C7035A, or C7044A flame detector. If the tube continues to glow when no flame is present, replace the sensing tube (C7035A), or replace the detector (C7027A or C7044A).

Adjust Detector Sighting Position

With the flame detector installed and burners running, adjust the position of the flame detector for optimum flame signal. The flame signal will be read in microamps or voltage (Vdc) depending on the Honeywell flame safeguard combustion control used.

Most existing Honeywell flame safeguard controls incorporate a flame current jack on the flame amplifier or on the control itself. The flame signal can be measured with a volt-ohmmeter such as the Honeywell W136A. To measure the flame current (signal), use a cable connector (part number 196146, included with the W136A) in conjunction with the meter. With the W136A (or equivalent) positioned at the zero to 25 microampere scale, make connections from the meter probes to the two ends of the cable connector plug (red to red, black to black). Make these connections before inserting the plug end of the connector plug into the flame jack of the control or control amplifier (see Fig. 10). Read the flame signal in microamperes directly from the W136A meter. Refer to Table 1 for the minimum acceptable flame currents.

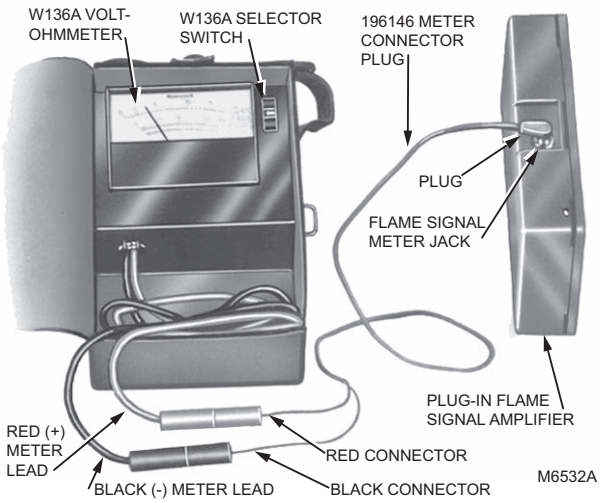

Fig. 10. Measuring microamp flame signal.

The R7749B and R7849A,B; R7851B Amplifiers used with the Honeywell BCS 7700 and 7800 SERIES controls, respectively, have a dc voltage flame signal output.

For the R7749B Amplifier, a volt-ohmmeter with a zero to 5 or 10 Vdc scale and a minimum sensitivity of 20,000 volts/ohm is suggested.

For the R7849A,B or R7851B Amplifiers used with the 7800 SERIES controls, a volt-ohmmeter with a zero to 5 or 10 Vdc scale and a minimum sensitivity of one megohm/volt is recommended, (see Fig. 11).

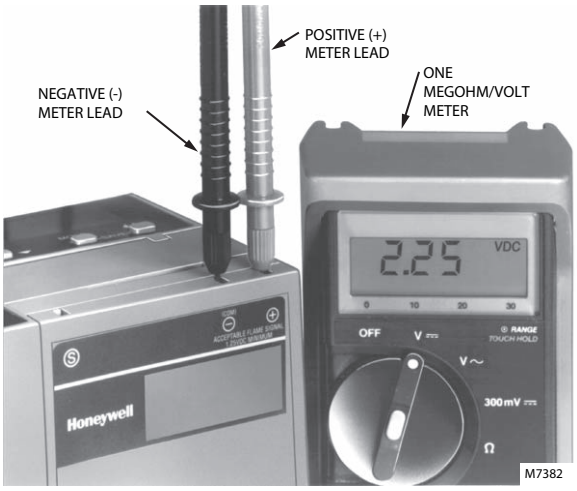

Fig. 11. Measuring flame signal voltage of 7800 SERIES controls.

Measure the flame signal voltage as illustrated in Fig. 11 and 12. Be careful to connect the positive meter lead to the positive (+) amplifier jack and the negative meter lead to the negative (-) amplifier jack (BCS 7700) or the (-Com) jack for a 7800 SERIES control. If the BCS 7700 and Series 7800 controls have the optional Keyboard Display Module, a zero to five Vdc reading will be displayed on the module.

Move the flame detector and sight pipe (if not permanently attached to the burner/boiler) to view the flame from various positions. Allow a few seconds for the meter reading to stabilize. A maximum steady microamp or voltage reading is desirable. The flame signal must be above the minimum acceptable level for the flame safeguard control and associated amplifier as indicated in Table 1.

Measure the flame signal for the pilot alone, the main burner flame alone, and both together (unless monitoring pilot only when using an intermittent pilot or supervising the main flame only when using direct spark ignition). Also, measure the flame signal at low and high firing rates and while modulating (if applicable).

With the flame detector in its final position, all flame signals must be steady with a current/voltage value as indicated in Table 1. If the minimum signal cannot be obtained or is unstable, refer to Troubleshooting, page 12.

Pilot Turndown Test

If the detector is used to prove a pilot flame before the main fuel valve can be opened, perform a Pilot Turndown Test. Follow the procedures in both the Instructions for the appropriate flame safeguard control, and in the burner manufacturer's instructions.

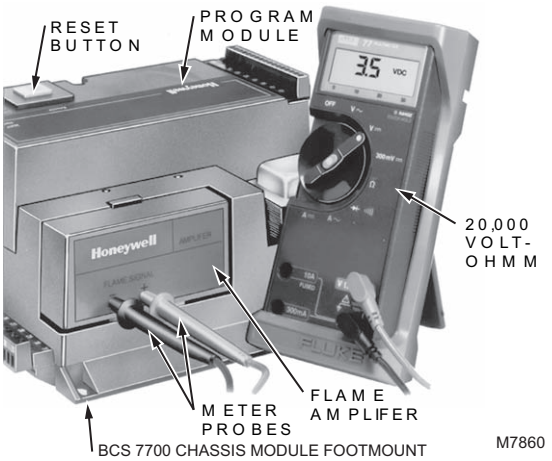

Fig. 12. Measuring the BCS 7700 flame signal voltage.

Table 1. Flame Signal.

Flame Detector	Plug-in Amplifier	Honeywell Flame Safeguard Control	Minimum Acceptable Steady Current (microamps)	Maximum Current Expected (microamps)	Minimum Acceptable Voltage (Vdc)	Maximum Voltage (Vdc)
C7027A, C7035A, C7044A	R7249A	BC7000 + PM720	3.5	7.5	—	—
	R7749B (AMPLICHECK™)	BCS7700A	—	—	2.2	4.98
	R7249A	R4075C[a],D[a],E[a]	3.5	7.5	—	—
		R4138C[a],D[a]	3.5	7.5	—	—
		R4140G,L,M	3.5	7.5	—	—
	R7290A	R4795A,D[a]	1.5	2.25	—	—
	None	R7023C[a]	1.5	2.25	—	—
	NONE	R7795A,C,E,G	1.5	2.25	—	—
	R7849A or R7849B (AMPLICHECK™)	7800 SERIES	—	—	1.25	5.0
	None	RA890G	1.5	2.25	—	—
C7927A	R7851B	7800 SERIES	—	—	1.25	5.0

[a] Currently obsolete.

Ignition Spark Response Test

Test to be sure that ignition spark is not actuating the flame relay (usually 2K) or flame LED in the flame safeguard control.

1. Close the pilot and main burner manual fuel shutoff valves.
2. Connect the appropriate meter to the flame safeguard control amplifier. Start the burner and run through the ignition period. Ignition spark should occur, but the flame relay must not pull in or the flame LED should not light. The flame signal should not be more than 0.25 microamp or 1.25 Vdc with the BC7700 or 0.5 Vdc for the 7800 SERIES.
3. If the flame relay does pull in or the flame LED lights, reposition the flame detector to increase the distance between the flame detector and the ignition spark. If the flame detector is not in the line of sight of the ignition spark but appears to respond to the spark, it may be responding to reflected spark generated UV radiation. If so, relocate the flame detector so it does not receive the reflected UV radiation. It may be necessary to construct a barrier to block the UV radiation generated by the spark from the flame detector view.
4. Continue making the adjustments until the flame signal due to ignition spark is less than 0.25 microamp or 1.25 Vdc on the BC7700, or 0.5Vdc for the 7800 Series.
5. The use of the Q624 or Q652 solid-state ignition transformer may also provide a method to eliminate the C7027A, C7035A, or C7044A flame detector response to UV radiation generated by ignition spark. The Q624 and Q652 prevents flame detector response to ignition spark by providing alternating periods of spark generation and UV sensor activation. If ignition spark is detected, try reversing the leads on the Q624 or Q652.

Response to Other Ultraviolet Sources

Some sources of artificial light produce small amounts of ultraviolet radiation. Under certain conditions, an ultraviolet detector will respond to them as if it is sensing a flame. Do not use an artificial light source to check the response of an ultraviolet detector. To check for proper flame detector operation, test for flame failure response under all operating conditions.

Weld The Sight Pipe (or Tighten the C7044A Clamp Screw)

When the flame signal is acceptable after all adjustments are made, remove the flame detector and weld the sight pipe in its final position. If you are using a swivel mount, the pipe may already be welded. Then reinstall the flame detector.

NOTE: If using a C7044A Detector with no sight pipe, do not remove the detector; tighten the clamp screw securely.

Final Checkout

Before putting the burner into service, check out the installation using the procedures in the Checkout section of the Instructions for the appropriate flame safeguard control. After completing the checkout, run the burner through at least one complete cycle to verify correct operation.

TROUBLESHOOTING

⚠ WARNING

Electrical Shock Hazard.
Can cause serious injury or death.
Be extremely careful while troubleshooting the detector; line voltage is present on some of the terminals when power is on.

Open the master switch to disconnect power before removing or installing the detector.

Inadequate Flame Signal

If a satisfactory flame signal cannot be obtained while adjusting the sighting position of the detector, perform the procedures indicated in steps 1 through 7. If other difficulties are encountered in the system, refer to Troubleshooting in the Instructions for the appropriate Honeywell flame safeguard control.

1. Check for proper line voltage. Make sure the master switch is closed, connections are correct, and power supply is the correct voltage and frequency.
2. Check the detector wiring for defects, including:
   a. incorrect connections.
   b. wiring type or size of wire.
   c. deteriorated wire.
   d. open circuits.
   e. short circuits.
   f. leakage paths caused by moisture, soot, or dirt.
3. With the burner running, check the temperature at the detector. When it exceeds 215°F (102°C) for a C7027, C7927 or C7044, or 250°F (121°C) for a C7035:
   a. use a heat block (part no. 136733) if using a C7027A or C7927 Flame Detector.
   b. add the additional insulation between the wall of the combustion chamber and the detector.
   c. add a shield or screen to reflect radiated heat away from the detector, or
   d. add cooling (refer to Sight Pipe Ventilation, page 6).
4. Remove the detector and clean the viewing window with a soft, clean cloth.
5. Clean the inside of the sight pipe (if one is used) before reinstalling the detector.
6. If the flame signal continues to be too low, replace the plug-in amplifier (if the control has one).
7. If you still cannot obtain a proper flame signal, replace flame detector (C7027A, C7927, C7044A) or UV radiation sensing tube (C7035A).

IMPORTANT:
At the completion of troubleshooting, be sure to perform the Adjustments and Checkout beginning on page 9.

MAINTENANCE

Periodic Maintenance

1. Clean the viewing window and sight pipe (if used) when necessary. Remove the detector and use a soft, clean cloth to remove accumulated contaminants from the UV radiation sensor tube glass envelope.
2. C7027, C7035 and C7044 ultraviolet sensing tubes have a life expectancy of 40,000 hours of continuous use within the ambient temperature and voltage ratings. Replace the sensing tube in the C7035, or replace the C7027, C7927 or C7044 Detector, at appropriate intervals.
3. Keep the flame detection system adjusted for the smoothest, most reliable operation as recommended by the burner manufacturer.

Cleaning the C7044A Detector

When necessary, clean the C7044 Flame Detector by using the following procedure:

1. Loosen the two screws holding the C7044 mounting bracket to the blast tube. To remove, twist the bracket and detector. Do not loosen the clamp screw that holds the mounting bracket to the detector.
2. Clean the viewing window with a soft, clean cloth.
3. Insert the detector into the mounting hole, and to realign it, twist against the mounting screws. Tighten the two mounting screws.

Automation and Control Solutions
Honeywell International Inc.
1985 Douglas Drive North
Golden Valley, MN 55422

Honeywell Limited-Honeywell Limitée
35 Dynamic Drive
Toronto, Ontario M1V 4Z9
customer.honeywell.com

Honeywell

® U.S. Registered Trademark
© 2011 Honeywell International Inc.
60-2026—14 M.S. Rev. 04-11
Printed in U.S.A.