VECTRON

VG4.460 D

www.elco-burners.com

ПРОМЭЛЕКТРОНИКА / sales@prom-elec.com

INNOVATION

Since its foundation in 1928, ELCO has always been a specialist in burners conception and manufacturing. By linking a strong innovative ability to a continued developing drive, ELCO has designed high performing and reliable burners as well as corresponding services throughout the years, and is today one of the leaders in the field of combustion technology.

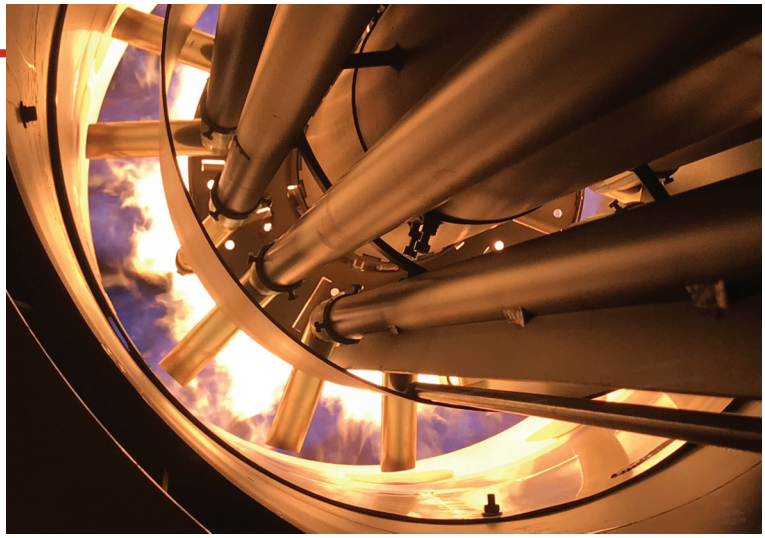

RESEARCH AND DEVELOPMENT

ELCO always looks for the best technologies and continues to develop new ones to improve the efficiency of its solutions.
Our R&D Laboratories are committed to develop innovative technological solutions allowing to:

- optimise the running of the installations lowering costs;
- offer service friendly products easy to maintain;
- preserve the environment lowering acoustic and pollutant emissions.

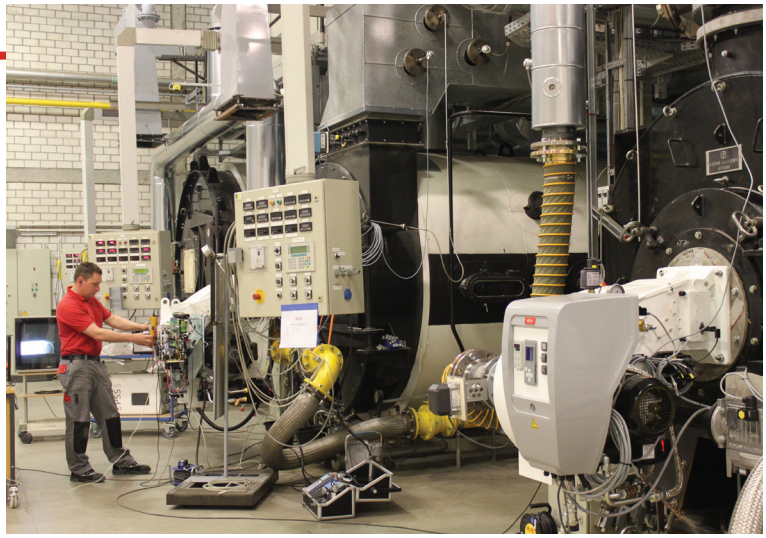

OUR PRODUCT RANGE

Our experience at combustion technology
available in a complete range of burners from 11 kW to 80 MW:

VECTRON	PROTRON	NEXTRON	EK EVO	N
11 - 2300 kW	17 - 550 kW	250 - 11200 kW	250 - 13500 kW	1300 - 22000 kW

CUTTING-EDGE BURNERS FOR HEATING AND INDUSTRIAL APPLICATIONS

KNOW-HOW

Your contacts at ELCO and its partners are recognised experts with years of experience.
Our worldwide support starts from concept creation to planning, design and project management up to commissioning and on-going operation of the plant throughout its life cycle.
As an ELCO customer, you can rely on your installation to perform reliably. Our guarantee is backed up by a service that sets standards in our field.

WORLDWIDE NETWORK

Capitalising on more than 90 years of work experience, ELCO has been capable to build up loyal partnerships and today can count on reliable Partners all over the World.
Combining an instinctively global perspective with a genuinely multicultural approach ELCO today offers you skilled and experienced experts available in more than 70 Countries.

In Europe
3 production plants
6 commercial branches
Strong commercial presence through a network of reliable dealers and partners

Worldwide
2 Sales Offices in Russia and China
Distribution in over 70 Countries

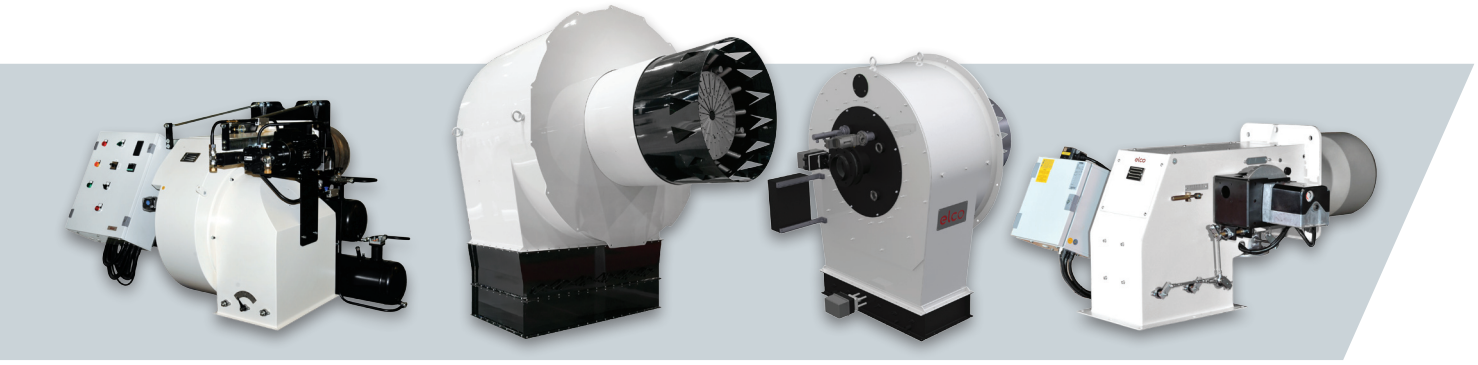

HO/GHO-TRON
68 - 17000 kW

RPD
500 - 80000 kW

EK-DUO
600 - 16000 kW

D-TRON
230 - 34000 kW

MONOBLOCK

VECTRON

Monoblock burners from 11 kW to 2300 kW in gas, light oil, biofuel and dual fuel

- The carachteristic cubic type architecture allows optimal accessibility and compactness to all models, simplifing all the installation and maintenance activities
- Low NOx emissions versions are available and capable not only to respect but also to exceed the requirements of the most stringent European directives

NATURAL

DUAL FUEL

LIGHT OIL

BIOFUEL

All VECTRON burners feature:

- Complete electrical equipment in the body of the burner with MDE2 System and display giving real-time information during the commissioning, the operation and at each operation cycle
- Quiet ventilation and reduced electrical consumption
- Maintenance operation are simplified: the combustion parts can be quickly removed, easily cleaned and easily get back to their position after all the servicing work
- Products are in compliance with EN676 and EN267 European standards and with the following directives: 2016/426/EU Gas Appliances Directive, 2014/30/EU EMC Directive, 2014/35/EU Low Voltage Directive, 2006/42/EC Efficiency Directive, 2011/65/EU RoHS2 Directive

VECTRON _ VG4.460 D

- Operation: two stages;
- Emission class: Low NOx class 3 (<80 mg/kWh) according to EN676

WORKING DIAGRAM

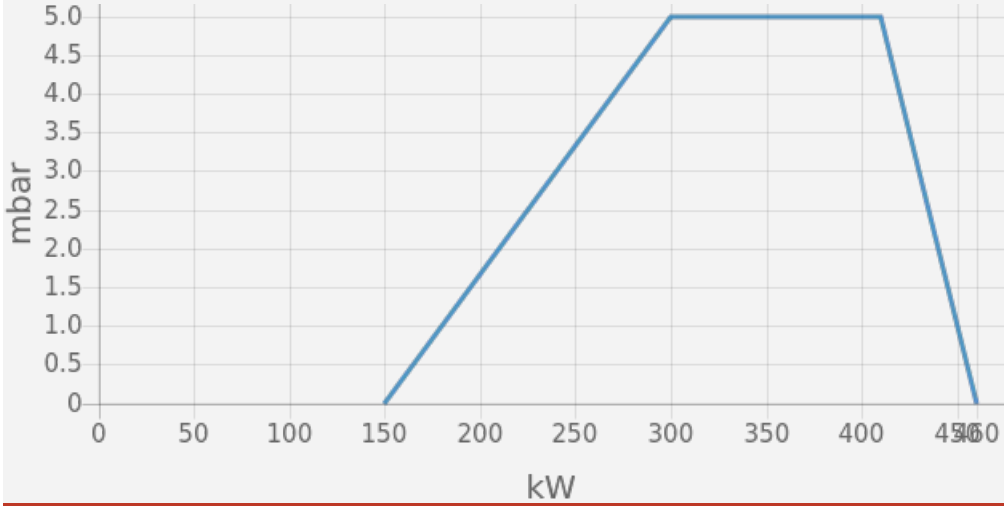

TECHNICAL DATA

Minimum power output (kW)	150
Maximum power output (kW)	460
Minimum gas pressure (mbar)	20
Maximum gas pressure (mbar)	300
Fan motor (kW)	0.42
Protection level	IP41

OTHER AVAILABLE CONFIGURATIONS

- 60 Hz version;
- Version with tightness control;
- Versions for continuous ventilation and post-ventilation

OVERALL DIMENSIONS

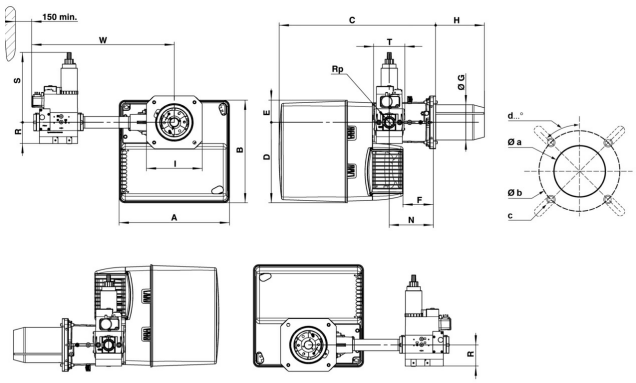

A	B	C	D	E	F	G	H	I	N	Øa	Øb	c	d
465	475	640	377	97	149	150	KN: 220 / KL: 360	245	195	180-240	200-270	M10	45°

Subsidiaries ELCO

GERMANY

ELCO GmbH

Dreieichstraße 10
Mörfelden-Walldorf
Tel.: +49 (0) 6105 287-287
Fax: +49 (0) 6105 287-199

NETHERLANDS

Elco Burners B.V.

Meerpaalweg, 1
1332 BB Almere
P.O. box 30048
1303 AA Almere
Tel. +31 088 69 573 11
Fax +31 088 69 573 90

FRANCE

14, rue du Saule Trapu
Parc d'activité du Moulin
91882 Massy
Tel. +33 01 60 13 64 64
Fax +33 01 60 13 64 65

SWITZERLAND

Elcotherm AG

Sarganserstrasse 100
7324 Vilters
Tel. +41 (0)81 725 25 25
Fax +41 (0)81 723 13 59

AUSTRIA

ELCO Austria GmbH

Aredstraße 16 - 18
2544 Leobersdorf
Tel. +43 (0)2256 639 99 32
Fax +43 (0)2256 644 11

ITALY

Via Roma, 64
31023 Resana (TV)
Tel. +39 0423 719500
Fax +39 0423 719580

UK & IRELAND

Ariston Thermo UK Ltd

Suite 3, The Crown House
Blackpole East, Blackpole Road,
Worcester WR3 8SG
Tel. +44 01905 788010
Fax +44 01905 788011

RUSSIA

Ariston Thermo RUS

Eniseyskaya str. 1, bld 1,
Office Center "LIRA" #438
129344 Moscow
Tel. +7 495 213 0300 #5700
Fax +7 495 213 0302

CHINA

Ariston Thermo (China) Co., Ltd.

F/15, V-Capital Bldg
No. 333 Xian Xia Road
200336 Shanghai
Tel. +86 21 6039 8691
Fax +86 21 6039 8620

Contact us to know more
about our products and solutions

www.elco-burners.com
contact@elco-burners.com