# VECTRON

## VG4.440 M E

www.elco-burners.com

ПРОМЭЛЕКТРОНИКА / sales@prom-elec.com

## INNOVATION

Since its foundation in 1928, ELCO has always been a specialist in burners conception and manufacturing. By linking a strong innovative ability to a continued developing drive, ELCO has designed high performing and reliable burners as well as corresponding services throughout the years, and is today one of the leaders in the field of combustion technology.

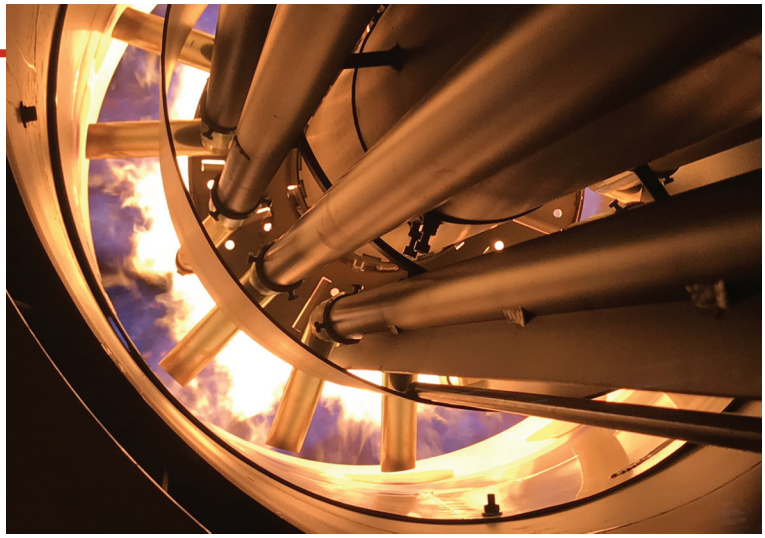

## RESEARCH AND DEVELOPMENT

ELCO always looks for the best technologies and continues to develop new ones to improve the efficiency of its solutions.
Our R&D Laboratories are committed to develop innovative technological solutions allowing to:

- optimise the running of the installations lowering costs;
- offer service friendly products easy to maintain;
- preserve the environment lowering acoustic and pollutant emissions.

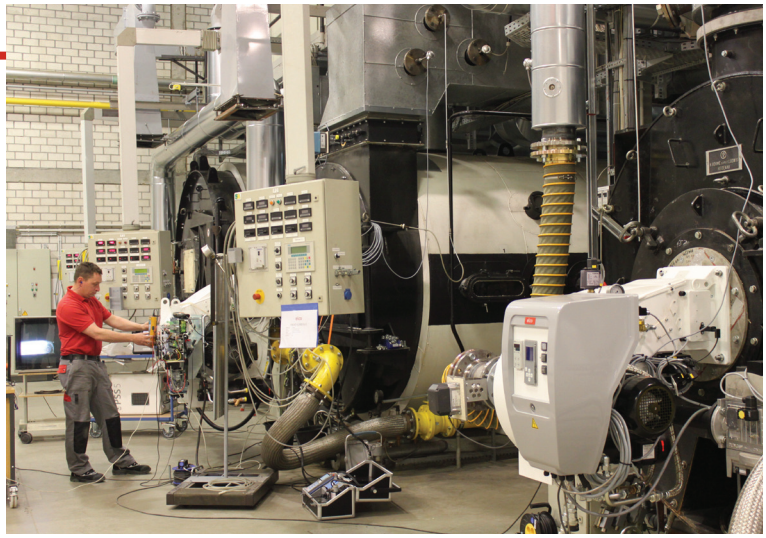

## OUR PRODUCT RANGE

Our experience at combustion technology
available in a complete range of burners from 11 kW to 80 MW:

| VECTRON | PROTRON | NEXTRON | EK EVO | N |
|---|---|---|---|---|
| 11 - 2300 kW | 17 - 550 kW | 250 - 11200 kW | 250 - 13500 kW | 1300 - 22000 kW |

# CUTTING-EDGE BURNERS FOR HEATING AND INDUSTRIAL APPLICATIONS

## KNOW-HOW

Your contacts at ELCO and its partners are recognised experts with years of experience.
Our worldwide support starts from concept creation to planning, design and project management up to commissioning and on-going operation of the plant throughout its life cycle.
As an ELCO customer, you can rely on your installation to perform reliably. Our guarantee is backed up by a service that sets standards in our field.

## WORLDWIDE NETWORK

Capitalising on more than 90 years of work experience, ELCO has been capable to build up loyal partnerships and today can count on reliable Partners all over the World.
Combining an instinctively global perspective with a genuinely multicultural approach ELCO today offers you skilled and experienced experts available in more than 70 Countries.

**In Europe**
3 production plants
6 commercial branches
Strong commercial presence through a network of reliable dealers and partners

**Worldwide**
2 Sales Offices in Russia and China
Distribution in over 70 Countries

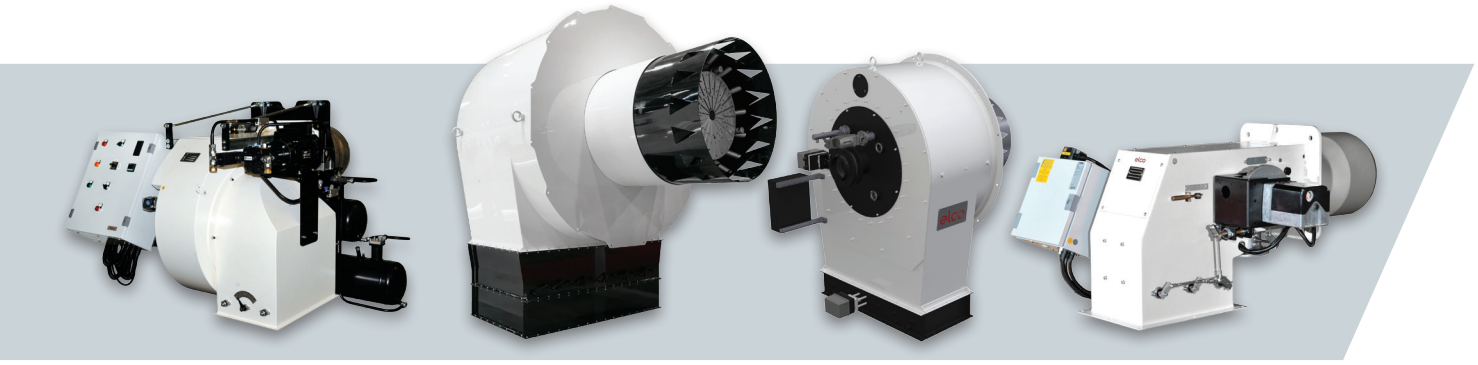

**HO/GHO-TRON**
68 - 17000 kW

**RPD**
500 - 80000 kW

**EK-DUO**
600 - 16000 kW

**D-TRON**
230 - 34000 kW

# MONOBLOCK

# VECTRON

## Monoblock burners from 11 kW to 2300 kW in gas, light oil, biofuel and dual fuel

- The carachteristic cubic type architecture allows optimal accessibility and compactness to all models, simplifing all the installation and maintenance activities
- Low NOx emissions versions are available and capable not only to respect but also to exceed the requirements of the most stringent European directives

NATURAL

DUAL FUEL

LIGHT OIL

BIOFUEL

## All VECTRON burners feature:

- Complete electrical equipment in the body of the burner with MDE2 System and display giving real-time information during the commissioning, the operation and at each operation cycle
- Quiet ventilation and reduced electrical consumption
- Maintenance operation are simplified: the combustion parts can be quickly removed, easily cleaned and easily get back to their position after all the servicing work
- Products are in compliance with EN676 and EN267 European standards and with the following directives: 2016/426/EU Gas Appliances Directive, 2014/30/EU EMC Directive, 2014/35/EU Low Voltage Directive, 2006/42/EC Efficiency Directive, 2011/65/EU RoHS2 Directive

# VECTRON _ VG4.440 M E

- Operation: two stage progressive/modulating electronic;
- Emission class: Low NOx class 5 according to EN676, ErP compliant;
- Integrated tightness control

## WORKING DIAGRAM

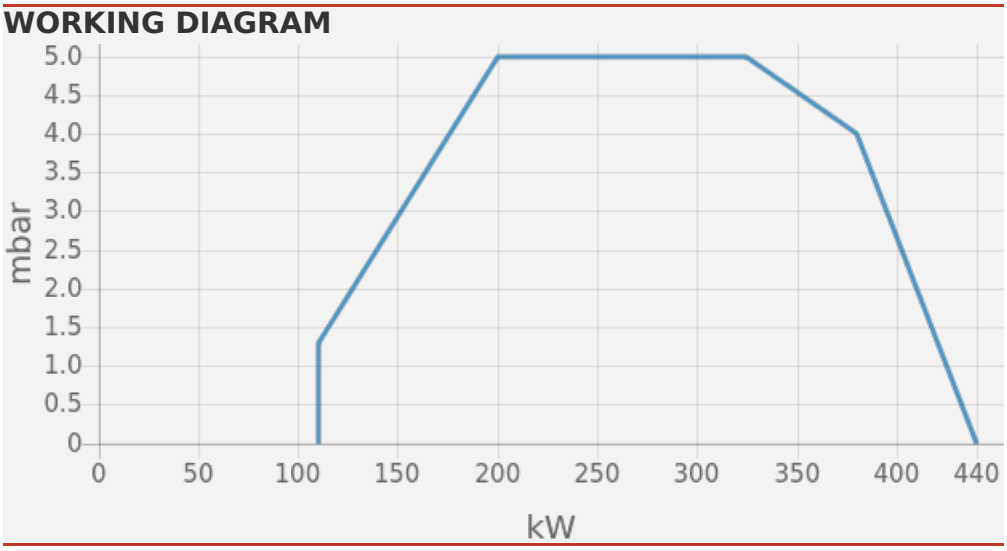


## TECHNICAL DATA

| | |
|---|---|
| Minimum power output (kW) | 110 |
| Maximum power output (kW) | 440 |
| Minimum gas pressure (mbar) | 20 |
| Maximum gas pressure (mbar) | 360 |
| Fan motor (kW) | 0.42 |
| Protection level | IP21 |

## OTHER AVAILABLE CONFIGURATIONS

- Versions for continuous ventilation and post-ventilation

## OVERALL DIMENSIONS

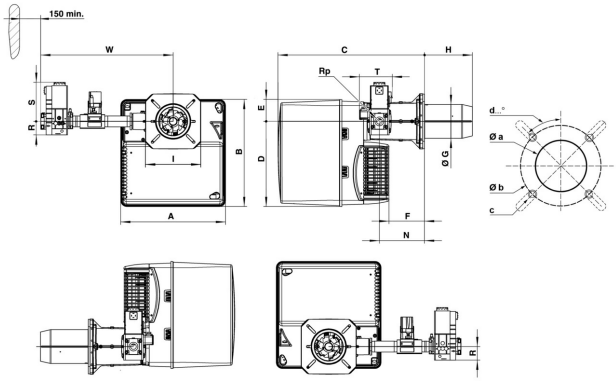


| A | B | C | D | E | F | G | H | I | N | Øa | Øb | c | d |
|---|---|---|---|---|---|---|---|---|---|---|---|---|---|
| 465 | 475 | 640 | 377 | 97 | 149 | 157 | KN: 212 / KL: 352 | 245 | 195 | 190-240 | 200-270 | M10 | 45° |

## Subsidiaries ELCO


**GERMANY**

ELCO GmbH

Dreieichstraße 10
Mörfelden-Walldorf
Tel.: +49 (0) 6105 287-287
Fax: +49 (0) 6105 287-199

**NETHERLANDS**

Elco Burners B.V.

Meerpaalweg, 1
1332 BB Almere
P.O. box 30048
1303 AA Almere
Tel. +31 088 69 573 11
Fax +31 088 69 573 90

**FRANCE**

14, rue du Saule Trapu
Parc d'activité du Moulin
91882 Massy
Tel. +33 01 60 13 64 64
Fax +33 01 60 13 64 65

**SWITZERLAND**

Elcotherm AG

Sarganserstrasse 100
7324 Vilters
Tel. +41 (0)81 725 25 25
Fax +41 (0)81 723 13 59

**AUSTRIA**

ELCO Austria GmbH

Aredstraße 16 - 18
2544 Leobersdorf
Tel. +43 (0)2256 639 99 32
Fax +43 (0)2256 644 11

**ITALY**

Via Roma, 64
31023 Resana (TV)
Tel. +39 0423 719500
Fax +39 0423 719580

**UK & IRELAND**

Ariston Thermo UK Ltd

Suite 3, The Crown House
Blackpole East, Blackpole Road,
Worcester WR3 8SG
Tel. +44 01905 788010
Fax +44 01905 788011

**RUSSIA**

Ariston Thermo RUS

Eniseyskaya str. 1, bld 1,
Office Center "LIRA" #438
129344 Moscow
Tel. +7 495 213 0300 #5700
Fax +7 495 213 0302

**CHINA**

Ariston Thermo (China) Co., Ltd.

F/15, V-Capital Bldg
No. 333 Xian Xia Road
200336 Shanghai
Tel. +86 21 6039 8691
Fax +86 21 6039 8620


Contact us to know more
about our products and solutions

**www.elco-burners.com**
**contact@elco-burners.com**