Installation, Maintenance and Operation Instruction

Industrial pump series - VB

ПРОМЭЛЕКТРОНИКА / sales@prom-elec.com

Contents

1 General Safety Notes 3
1.1 Intended Use 3
2 General Information 3
2.1 hp-Industrepumpe VB-Baureihe 3
2.2 Operational Limits 4
2.3 Materials used 4
2.4 Mechanical seal 4
3 Installation 5
4 Commissioning 6
5 Accessories 7
5.1 hp-Electrical standby and companion heater 7
6 Operation 7
6.1 Inspection and Maintenance 7
6.1.1 hp-Electrical standby and companion heaters 7
6.1.2 Oil filter 7
6.2 Preservation 7
6.3 Troubleshooting 8
7 Environment 8
8 General Information 9
8.1 Application Risk 9
8.2 Usable fuel 9
8.3 Painting 9
8.4 Directives 9
8.5 Documentation 9
9 Dimensional drawing VB – Industrial pump 10
10 Flow characteristics for hp-pumps series VB 11

1 General Safety Notes

⚠ CAUTION	Indicates a potentially dangerous situation. If this is not avoided, small or light injury may result.
NOTICE	Indicates general information on a danger of property damage. Indicates general information on a danger of personal injury.

The notes for installation and maintenance are intended for a specialist!

Pursuant to DIN EN 12514-1 section 4.3.3., the operator of the complete system must provide a pressure controller, e.g. a pressure control device.

The operator shall responsible for complying with general accident prevention, safety and operating provisions.

1.1 Intended Use

In spite of careful safety optimization being performed, there is still some residual danger from operating the pump. The safety notes explained above and in the following must be observed under any case to prevent personal injury and / or damage to the pump. By complying with the instructions at all times, you will increase your pump's service life and retain full warranty claims towards the manufacturer in the case of damage.
Any pumps are subjected to a performance test after manufacture and are equipped with a test card.

2 General Information

2.1 hp-Industrial pump series VB

The VB series pumps are internal gear pumps. They have an integrated overflow valve. The flow rate for normal fuel oil at 20 °C (6 cSt) and motor speed of 1400/2800 min $^{-1}$ (depending on on pump size) is 6700 l/h at 40 bar. The pressure range where the pump works depends on the chosen pressure stage (see Chapter 4). It ranges between 0,5 – 40 bar.
An internal geared rotor drives an excentric mounted outer geared pinion. The pumping medium will conveyed between the tooth gaps of the two gears. For this purpose the conveyor rooms are sealed by a cap with an integrated crescent.
The VB series pumps are intended for transporting heating oils (see Kap. 8.2). Where other media has to be transported, this must be verified by the manufacturer. Otherwise, the pump's service life may be decreased.

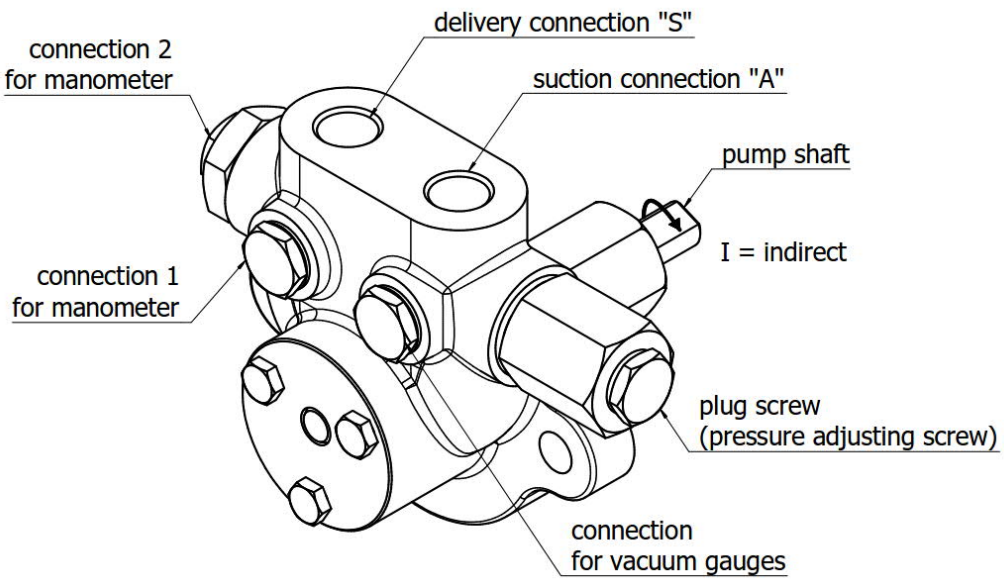

Fig. 1. (Excample for direction of rotation „I“)

For use with pre-heated media - which have a higher viscosity when cooled - the manufacturer recommends the use of an electrical standby and companion heating system H1 without thermostat (see Fig. 3). It is available as an accessory.

The following information is engraved into the pump body:

- Exact description of the pump type
- manufacturing date – MM/YY
- Rotational direction arrow (corresponding to order)
- Manufacturer's pump number
- The side for suction connection will be marked with „A“
- The side for delivery connection will be marked with „S“.

2.2 Operational Limits

Flow	max. 6700 l/h
Max. pressure (adjustable with integrated overflow valve)	40 bar
Min. permitted pre-pressure	- 0,6 bar CAUTION! Gas secretions arise already at -0,4 bar.
Max. permitted pre-pressure	5,0 bar
Max. allowed pump RPM	2800 min^{-1} at 50 Hz
Temperature	Up to 150 °C
Permitted test pressure for approvals	Max. 60 bar with removed mech. seal (Sealing area closed by jack)

2.3 Materials used

Pump housing	EN-GJL-250
Rotor	EGT 88
Pinion gear	16MnCr5
Lower bearing	EN-GJL-250
Mechanical seal	Carbon/ SiC- Viton – CrNiMo-steel
Valve parts	Spring wire steel, 11SMnPb30+C, 16MnCrS5

2.4 Mechanical seal

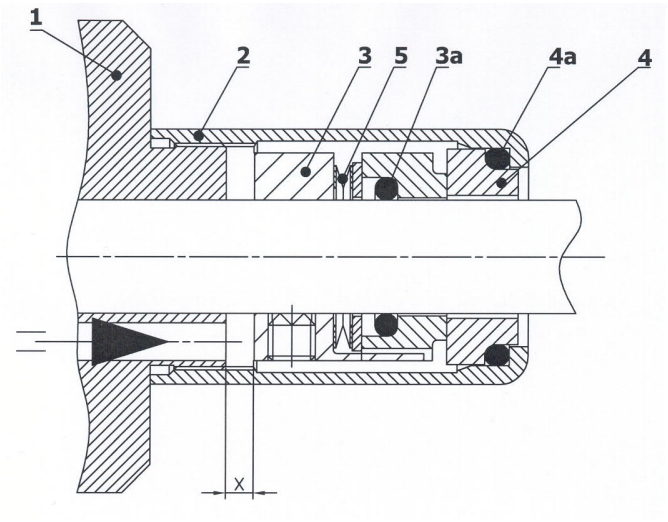

1. Pump housing
2. Union nut
3a. O-Ring
3. Tapet
4a. O-Ring
4. Counter ring
5. Spring

X Installation size*

* - In case of replacement can be found in the documents accompanying the valid installation dimension

Item no. for shaft Ø12: 0190015
Item no. for shaft Ø18: 0190016
Item no. for shaft Ø22: 0190017

Fig. 2.

All hp pumps are equipped with axial face seals. They are temperature-resistant up to 150°C.
These axial face seals are relieved at the pump's suction side.
Maximum pressure load on the GLRD, i.e. suction side, against temperature (see adjacent figure).

For a new pump a max. leakage of 1 cm3/day is regular.

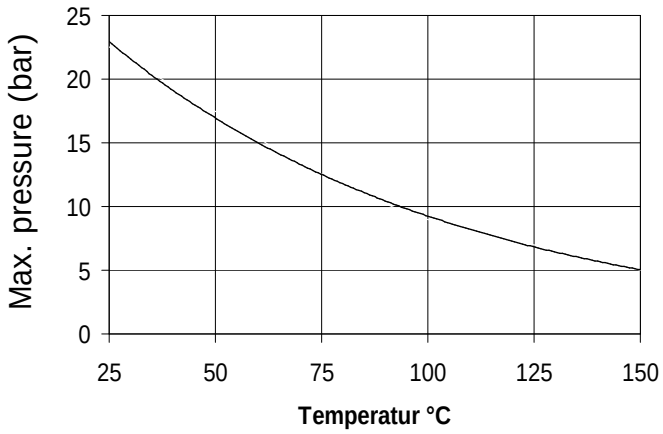

3 Installation

- Installation must be performed so that the pump shaft and drive shaft are perfectly aligned in axial direction and so that there is no radia force. Furthermore, a coupling appropriate for the pump shaft in size and weight and not transferring any imbalances to the pump must be used.
- The axial clearance between the coupling halves should be max. 1,5 mm. Rotation coupling parts must not touch any fixed pump or engine parts axially!
- Before connecting the lines, all plastic caps must be removed.
- All connections and lines must be installed free of tension and tight. We recommend only using sealing rings made of copper, aluminium or plastics. Never use hemp or similar materials. The pipes must be cleaned from any dirt and metal particles before the pump is connected.
- The suction connection (see Fig. 1) of the pump is filled with oil. Then the suction line is connected to thread connection „A“.
- The pressure/delivery line connect to thread connection „S“. (Fig. 1)
- Remove the screw plug for connecting the manometer 1 / vacuum gauge (Fig. 1). The pressure gauge connected to port „A“ it shows the suction pressure and the pressure gauge connected to port „S“ it shows the delivery pressure. Observe using manometers with the right pressure range (according to the pump's pressure range).
- Before switching on the pump, check that all locking valves in the pipes and check whether the pump has sufficient medium is available.
- Ensure that the pump is operated in the intended rotational direction (engraved arrow). Connect the motor according to the information on the type plate and switch it on. Preventively provide a motor protection switch with overload function!
- The pump shaft is sealed to the outside with a mechanical seal made of the materials carbon / SiC and Viton elastomer.

Pumps must never be used as a fix point for the connected pipes. Any forces and moments appearing, e.g.

- Tensions
- Expansion of pipe lines due to temperature influence or reaction forces must be avoided.
- To prevent possible heat expansion of pipe lines, we recommend installing compensators.
- The suction line must be designed so that the flow speed is between 0.5 und max. 1.0 m/sec.
- The pressure line must only reach a maximum of 2 – 2.5 m/sec.
- The suction line must be vacuum-tight and placed in a rising fashion.
- Ensure that the pump and pipe system is not contaminated, e.g. by purging.
- When testing the pipe system for tightness, the max. permissible shaft sealing supply pressure must not be exceeded.

NOTICE

Never use water as purging liquid!
Danger of corrosion!

4 Commissioning

⚠ CAUTION

Ensure that the pump does not start up dry. It must be filled with oil.

Mechanically abrasive and chemically aggressive components in the medium reduce the pump service life.

Clear your pipe lines from any dirt or metal particles before connecting it to the pump.

Ensure correct rotational direction (see engraved arrow).

Only perform the basic settings or adjustment of the pump pressure when the pressure line is closed.

Before installation, ensure that the pump and drive shafts correspond exactly in axial direction. There must not be any radial force.
Use a coupling suitable for the pump shaft in respect of size and weight. This way, you can avoid transferring imbalances onto the pump shaft.

- Before switching on the pump, check that all locking valves in the pipes and check whether the pump has sufficient medium is available.
- For pressure regulation, the plug screw (see Fig. 1) must be removed.
- After removing the cover screw, the pressure regulating screw with hexagon socket (6mm size) is visible. Use a hexagon wrench to:

  - Turn the setting screw to the right (clockwise) to increase the pressure
  - Turn the setting screw to the left (counterclockwise) to decrease the pressure

- When adjusting the desired operational pressure, observe that it may only be set within the permissible pressure range of the included pressure spring (pressure level 0 to 4).

Pressure level	Pressure range	Factory settings
0	from 0,5 - 1,5 bar	1 bar
1	from 1 - 4 bar	2 bar
2	from 2 - 9 bar	6 bar
3	from 6 - 25 bar	15 bar
4	from 15 - 40 bar	15 bar

Attention! Setting an operational pressure exceeding the pressure range will cause the spring to lock and lead to pressure surges and thus to pump outage after a short time.

For oil-burning applications, close the burner's solenoid valve before setting or resetting pump pressure.

- When the pressure is set, the pressure adjustment cover screw and its sealing must be replaced oil-tight.

NOTICE

Non-compliance with the max. pressure range may cause spring blockage. These in turn causes pressure surges and thus pump outage after a short time.

If the medium rotates within the pump for too long, this may cause damage to the valve, overheating and, as a result, mechanical damage.

For highly viscous media, a pump heating is prerequisite. To avoid cavitations and damage to the shaft sealings, the heating times must be observed under any circumstances (abaut 30min starting from 20°C).

Because of heat expansion, all valves must be open when heating.

5 Accessories

5.1 hp-Electrical standby and companion heater

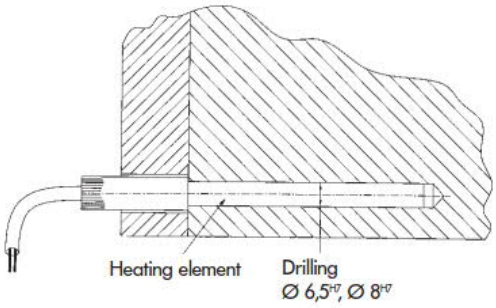

Fig. 3.

hp- Electrical standby and companion heaters

All hp-Pump models can be equipped with electrical heating system without thermostat at the factory.

Using this option is strictly recommend for using the pumps with "heavy fuel oil"!

6 Operation

6.1 Inspection and Maintenance

6.1.1 hp-Electrical standby and companion heaters

When replacing a defect electrical heater it is strongly recommended to insert only electrical heaters designed by the manufacturer. Otherwise:

- the medium can be heated to excessively high temperatures. Consequence thereof is e.g. gas release of the medium.
- The required operating temperature cannot be reached. Consequence thereof is e.g. the required engine power is greater than the available maximum engine power.
- Result of the too low or too high a temperature is, e.g. outage of the mechanical seal after a shorter time.

6.1.2 Oil filter

The pump is provided with a suction filter integrated in the suction line. The filter must be checked for dirt regularly and replaced if required. The mesh width of the filter element depends on the viscosity of the transported medium. Transported media with a high viscosity (heavy heating oil) require a filter element with a mesh width of 500 µm and alternative for media with a low viscosity a filter element with mesh width 100 µm is recommend. The pump supply must be within a pressure range of -0.4 to 5 bar.

NOTICE

Filter elements must be disposed of under environmental considerations.

6.2 Preservation

After the test run, testing oil remains in the pump to preserve it. The parts not treated ex works must be re-treated by the operator according to the local conditions.
If the pump is inactive for an extended period or stored, it must be preserved with acid-free non-resinous oil and stored dryly.

6.3 Troubleshooting

Errors appearing		Possible cause
The pump does not prime		1, 2, 3, 4, 5, 12
The pump does not work at full capacity		3, 4, 5, 8, 9, 10, 11, 17, 18
The pump is operating noisily		3, 4, 5, 6, 7, 10, 11, 13, 17
The motor heats up		9, 10, 13
Uneven transport		3, 5, 8, 10, 11
Shaft seal is not tight		7, 10, 14, 15, 16
No.	Possible cause	Removal
1.	No medium in the pump	Fill pump with medium
2.	Pump has the wrong rotational direction	Set rotational direction according to the engraved arrow
3.	Filter element, valve or lines are clogged	Check and clean parts
4.	Suction line or shaft seal are leaking	Check suction line, connection points and valves or shaft face seal
5.	Suction head too large	- Decrease height difference - Shorten line - Increase line diameter - Decrease medium viscosity by heating
6.	Axis error	Pump, coupling and motor: - Align shaft end precisely - Balance coupling
7.	Vibrations and pulsations in the system	- Use elastic bearings for the aggregate - Use hoses for connections
8.	The overflow valve is jammed or set too low	Check or adjust valve
9.	Wrong speed	- Check motor speed and power consumption - Compare voltage and frequency to the type plate
10.	Medium too viscous	- Increase medium temperature - Lower speed
11.	Air inclusions or gas formation in the medium	- Remove leakages - Decrease suction height - Increase feed pressure
12.	Pump does not vent	Vent pressure line at the highest point
13.	Motor bearing damaged	Renew motor bearings
14.	Shaft seal damaged	Replace shaft seal
15.	Feed pressure too high or too low	- Decrease feed pressure in the system - Insert check valve on the pressure side
16.	Cold start when transporting heavy oil	Install pump heating and observe pre-heating time
17.	Overflow valve fluttering	Set opening pressure higher by turning the setting screw clockwise.
18.	Overflow valve leaking	Clean overflow valve

NOTICE

For economic reasons, we recommend providing a reserve pump right at the burner.

7 Environment

Of course, hp-TECHNIK focuses on Environmental protection for its development work! To ensure that the environment does not take damage from our products - caused, e.g. by environmentally harmful media escaping unnoticed - we will even increase our efforts for the further development of our hp- Program.

We are continuously working to decrease effects on the environment as well as energy and resource consumption - far exceeding the measure required for compliance with environmental protection laws and regulations.
Environmentally compatible actions are not only a task for each and every employee, but must also be supported continuously by the management. We ensure that our environmental policy is effectively implemented. The technical and organizational procedures required for this are inspected regularly and continuously developed.
We support our customers in the environmentally compatible use of our products.

8 General Information

8.1 Application Risk

In case of failure or leakage may occur hazards to humans and the environment.

8.2 Usable fuel

Liquid fuels, mainly fuel oils derived from crude oil distillation, qualities according to DIN 51603 Part 1 – 5.
FAME – mix with fuel oil according to DIN 51603 Part 6 (FAME = Fatty Acid Methyl Ester)
FAME 100% DIN EN 14214 respectively EN 14213
Crude oils (max. fluid temperature 90°C)
Marine fuel ISO 8217 (HFO, MDF Kategorie ISO-F-DMX, DMA, DMB)
Cold-pressed bio fuel according to DIN V 51605

Characteristics for different fuels (reference value)

Fuel	Density (at 20 °C)	Kin. viscosity (at 40°C)	Max. temperature at spraying viscosity *)
Unit	[kg/m³]	[mm²/s]	[°C]
Fuel oil (DIN 51603-1)	max. 856	max. 3,6	15
Havy fuel oil (DIN 51603-3)		max. 1150	160
Re – raffinate (DIN 51603-4)		<45	90
Fuel oil (DIN 51603-6)	max. 860	max. 3,6	15
Marine Fuels (ISO 8217)	890 (15°C)	min: 1,4; max. 11	80
RME (DIN EN 14213)	856,6-896,6	3,5 – 5,0	28
Rape oil (DIN V 51605)	896,6-926,6	max. 36,0	85
Ecoil (Basis Rapsöl)	923,3	39,3	85 – 90
Palm oil	947,6	85,9	100 – 105

*) temperature values are approximate
Chemical resistance of all parts for specified types of fuel. Non-standard fuels are excluded from the warranty.

8.3 Painting

black RAL 9005.
temperature resistant to 150 °C, coating thickness min. 2µm

According to the requisitions, the executed painting may vary from the standard paint.

8.4 Directives

PED 97/23/EG
MD 2006/42/EG
EMC 2004/108/EG (89/336/EWG)
LVD 2006/95/EG (73/23/EWG)
ROHS 2000/53/EG
EU MEPS
WEEE 2002/95/EC
Observe the relevant national regulations.

8.5 Documentation

Test report on leak and functional testing
Installation, maintenance and operating instructions with dimensional drawing and flow characteristics

9 Dimensional drawing VB – Industrial pump

Pipe connections
pipe thread DIN ISO 228-1

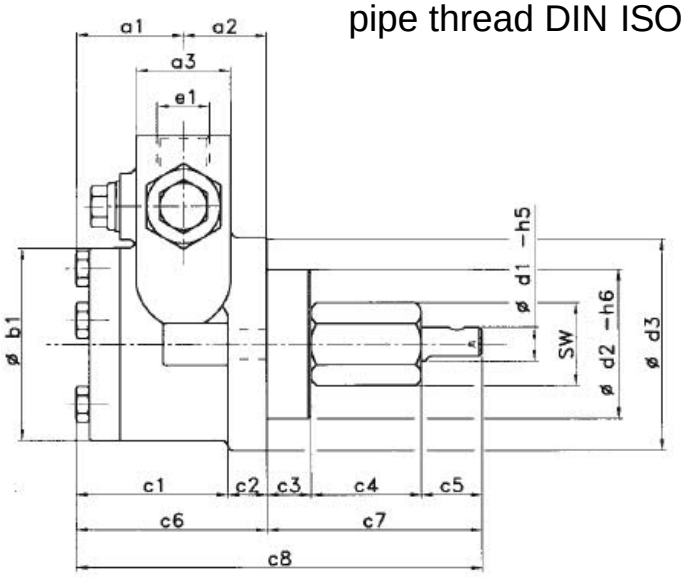

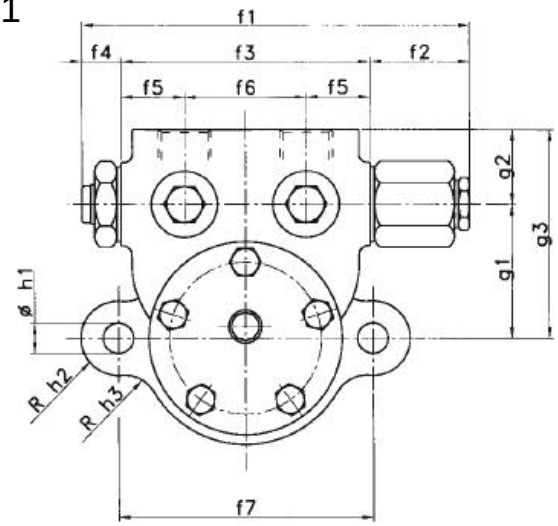

Manometer connection G ¼”

Gear rotor size Ø	Discharge l/h 1400 min⁻¹	Discharge l/h 2800 min⁻¹	a1	a2	a3	b1	c1	c2	c3	c4	c5	c6	c7
25	45 - 160	90 - 320	35,5	20	33	51	41,5	14	16	40	20	55,5	76
38	150 - 600	300 - 1200	39,5	30	38	70	55,5	14	16	40	20	69,5	76
56	1000 - 2000	–	48,5	38	45	96	71,5	15	18	79	27	86,5	124
75	3000 - 6700	–	62,5	85	70	115	129,5	18	25	65	37	147,5	127

Gear rotor size Ø	Discharge l/h 1400 min⁻¹	Discharge l/h 2800 min⁻¹	c8	d1	sw/e	d2	d3	e1	f1	f2	f3	f4	
25	45 - 160	90 - 320	131,5	12	27/31,2	54	80	G 3/8"	139	32	90	17	–
38	150 - 600	300 - 1200	145,5	12	27/31,2	54	80	G 1/2"	139	32	90	17	–
56	1000 - 2000	–	210,5	18	46/53,1	60	100	G 3/4"	162	26,5	118	17,5	–
75	3000 - 6700	–	274,5	22	55/63,5	80	120	G 1"	211	36	150	25	–

Gear rotor size Ø	Discharge l/h 1400 min⁻¹	Discharge l/h 2800 min⁻¹	f5	f6	f7	f8	g1	g2	g3	h1	h2	h3	
25	45 - 160	90 - 320	26	38	92	140	40	27	67	11	13	13	–
38	150 - 600	300 - 1200	23	44	92	140	48	27	75	11	13	13	–
56	1000 - 2000	–	25,5	67	120	171	55	35	90	13	13	25	–
75	3000 - 6700	–	35	80	150	218	80	40	120	14,5	15	–	–

10 Flow characteristics for hp-pumps series VB

Flow characteristics VB for fuel oil L/EL

Gear rotor Ø25

at 1400 min^{-1}

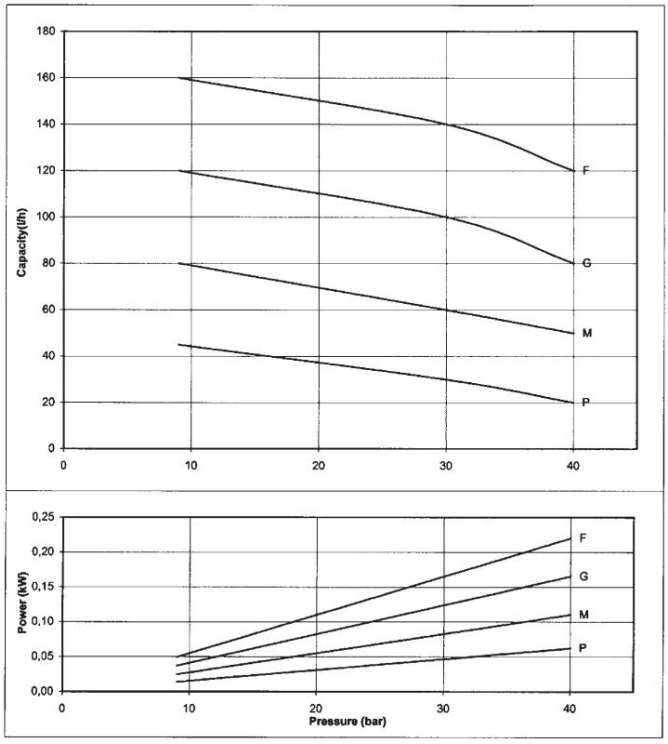

at 2800 min^{-1}

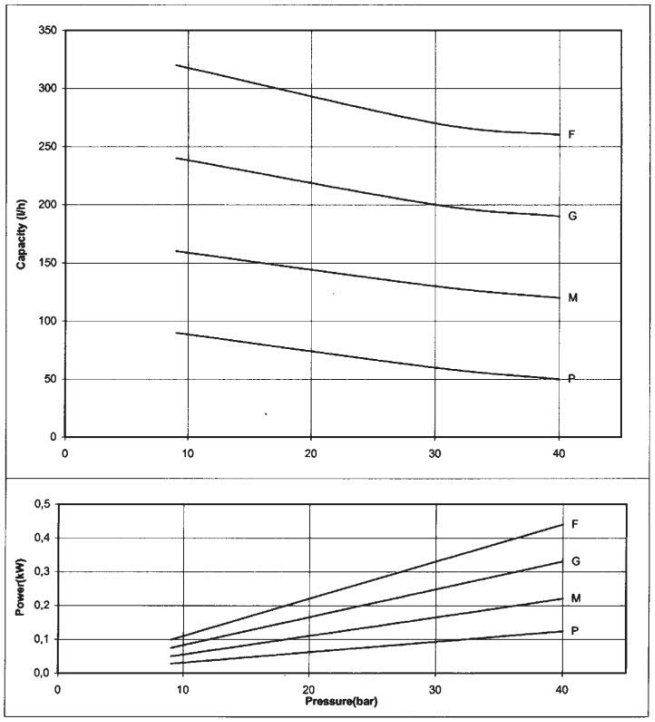

Gear rotor Ø38

at 1400 min^{-1}

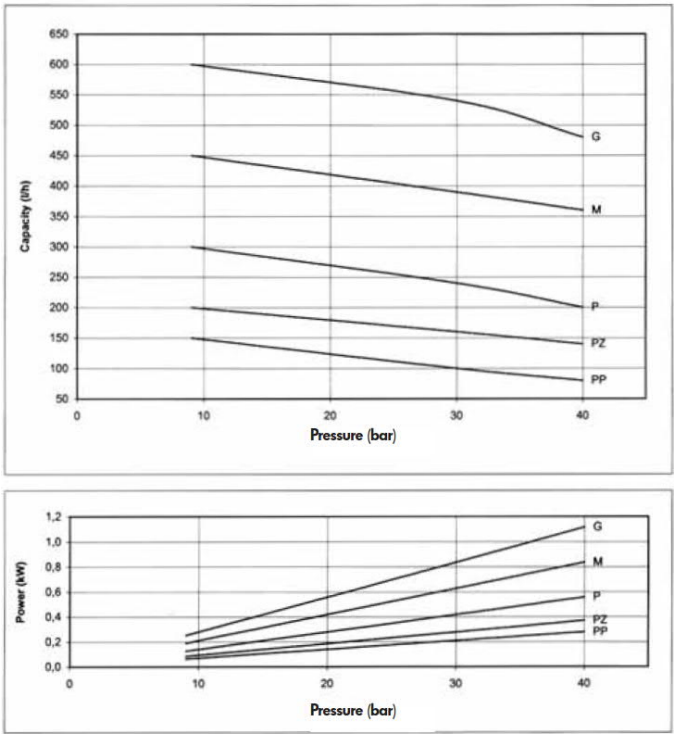

at 2800 min^{-1}

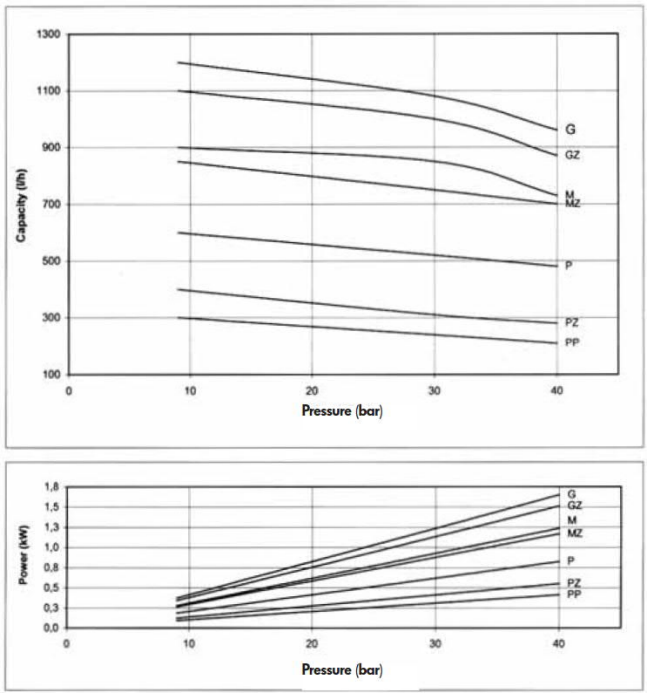

10/2014

Gear rotor size-Ø 56 at 1400 min^{-1}

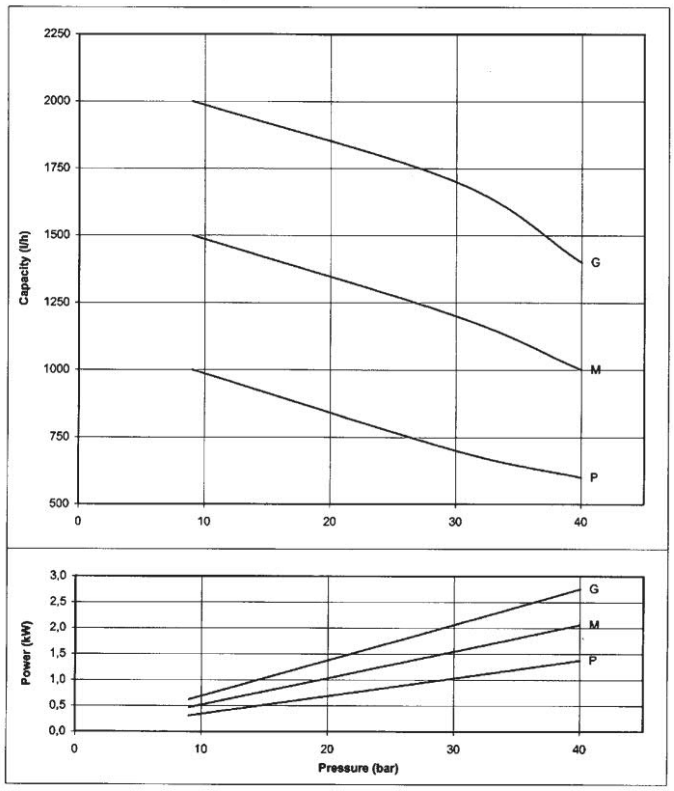

Gear rotor size-Ø 75 at 1400 min^{-1}

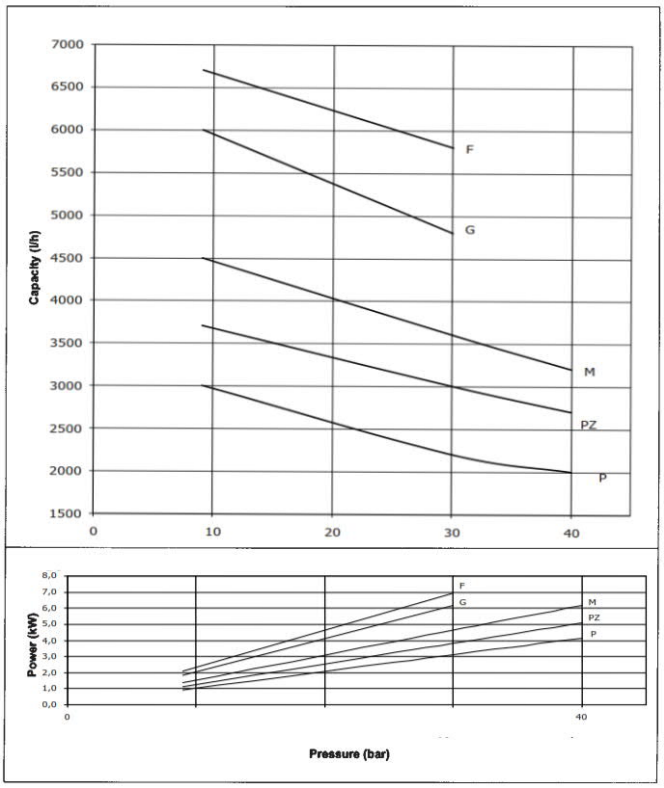

10/2014