Installation, Maintenance and Operation Instruction

Industrial pump series - B

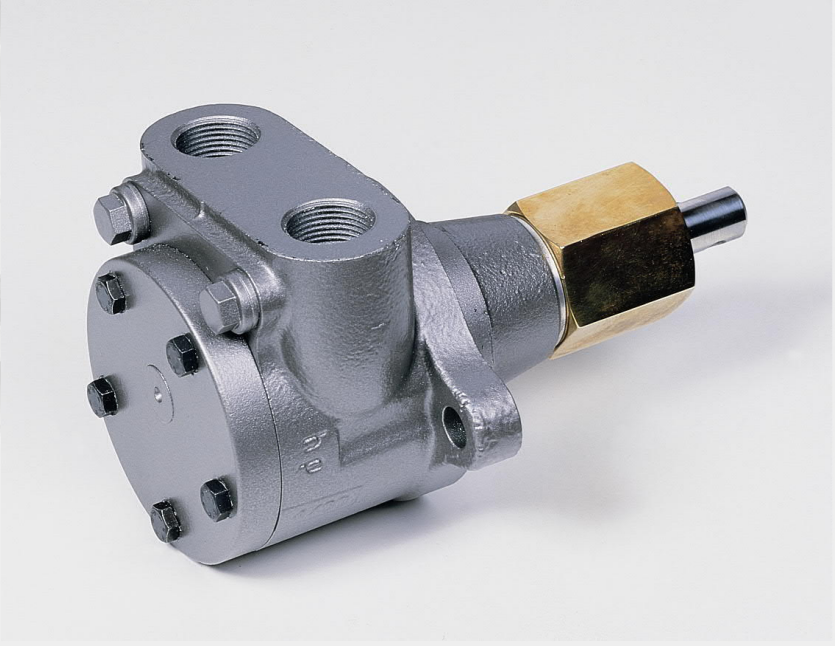

Contents

1 General Safety Notes 3
1.1 Intended Use 3
2 General Information 3
2.1 hp-Industrial pump series B 3
2.2 Operational Limits 4
2.3 Materials used 4
2.4 Mechanical seal 4
3 Installation 5
4 Commissioning 6
5 Accessories 6
5.1 hp-Electrical standby and companion heater 6
6 Operation 6
6.1 Inspection and Maintenance 6
6.1.1 hp-Electrical standby and companion heaters 6
6.1.2 Oil filter 6
6.2 Preservation 7
6.3 Troubleshooting 7
7 Environment 8
8 General Information 8
8.1 Application Risk 8
8.2 Usable fuel 8
8.3 Painting 8
8.4 Directives 8
8.5 Documentation 8
9 Dimensional drawing B – Industrial pump 9
10 Flow characteristics for hp-pumps series B 10

1 General Safety Notes

⚠ CAUTION	Indicates a potentially dangerous situation. If this is not avoided, small or light injury may result.
NOTICE	Indicates general information on a danger of property damage. Indicates general information on a danger of personal injury.

The notes for installation and maintenance are intended for a specialist!

Pursuant to DIN EN 12514-1 section 4.3.3., the operator of the complete system must provide a pressure controller, e.g. a pressure control device.

The operator shall responsible for complying with general accident prevention, safety and operating provisions.

1.1 Intended Use

In spite of careful safety optimization being performed, there is still some residual danger from operating the pump. The safety notes explained above and in the following must be observed under any case to prevent personal injury and / or damage to the pump. By complying with the instructions at all times, you will increase your pump's service life and retain full warranty claims towards the manufacturer in the case of damage.
Any pumps are subjected to a performance test after manufacture and are equipped with a test card.

2 General Information

2.1 hp-Industrial pump series B

⚠ CAUTION

Ensure that no locking valve is connected directly to the pressure line. The pump must never be operated against a closed pressure line.

The B series pumps are internal gear pumps without integrated overflow valve. The flow rate for normal fuel oil at 20 °C (6 cSt) and motor speed of 1400/2800 min $^{-1}$ (depending on on pump size) is 6700 l/h at 40 bar.
An internal geared rotor drives an excentric mounted outer geared pinion. The pumping medium will conveyed between the tooth gaps of the two gears. For this purpose the conveyor rooms are sealed by a cap with an integrated crescent.
The VB series pumps are intended for transporting heating oils (see Kap. 8.2). Where other media has to be transported, this must be verified by the manufacturer. Otherwise, the pump's service life may be decreased.

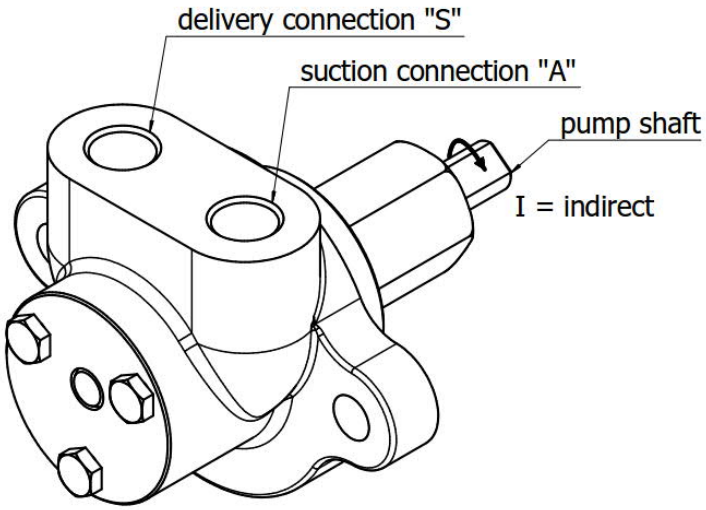

Fig. 1. (Excample for direction of rotation „I“)

For use with pre-heated media - which have a higher viscosity when cooled - the manufacturer recommends the use of an electrical standby and companion heating system H1 without thermostat (see Fig. 3). It is available as an accessory.

The following information is engraved into the pump body:

- Exact description of the pump type
- manufacturing date – MM/YY
- Rotational direction arrow (corresponding to order)
- Manufacturer's pump number
- The side for suction connection will be marked with „A“
- The side for delivery connection will be marked with „S“.

2.2 Operational Limits

Flow	max. 6700 l/h
Max. pressure (adjustable with integrated overflow valve)	40 bar
Min. permitted pre-pressure	- 0,6 bar CAUTION! Gas secretions arise already at -0,4 bar.
Max. permitted pre-pressure	5,0 bar
Max. allowed pump RPM	2800 min^{-1} at 50 Hz
Temperature	Up to 150 °C
Permitted test pressure for approvals	Max. 60 bar with removed mech. seal (Sealing area closed by jack)

2.3 Materials used

Pump housing	EN-GJL-250
Rotor	EGT 88
Pinion gear	16MnCr5
Lower bearing	EN-GJL-250
Mechanical seal	Carbon/ SiC- Viton – CrNiMo-steel
Valve parts	Spring wire steel, 11SMnPb30+C, 16MnCrS5

2.4 Mechanical seal

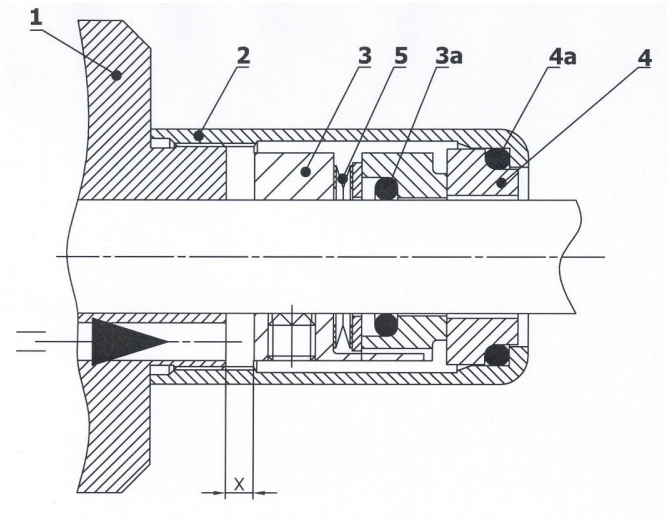

1. Pump housing
2. Union nut
3a. O-Ring
3. Tapet
4a. O-Ring
4. Counter ring
5. Spring

X Installation size*

* - In case of replacement can be found in the documents accompanying the valid installation dimension

Item no. for shaft Ø12: 0190015
Item no. for shaft Ø18: 0190016
Item no. for shaft Ø22: 0190017

Fig. 2.

All hp pumps are equipped with axial face seals. They are temperature-resistant up to 150°C.
These axial face seals are relieved at the pump's suction side.
Maximum pressure load on the GLRD, i.e. suction side, against temperature (see adjacent figure).

For a new pump a max. leakage of 1 cm3/day is regular.

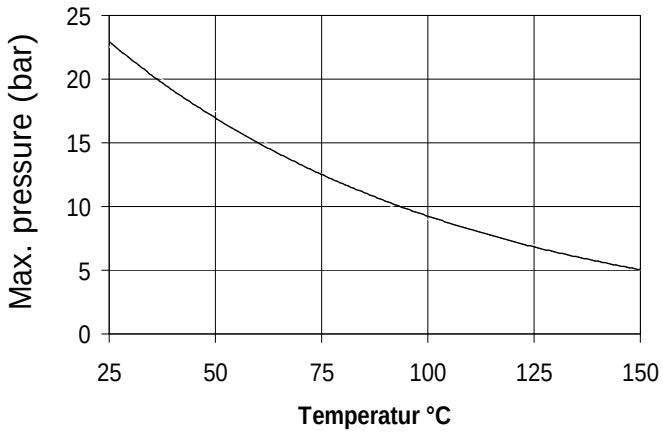

3 Installation

- Installation must be performed so that the pump shaft and drive shaft are perfectly aligned in axial direction and so that there is no radia force. Furthermore, a coupling appropriate for the pump shaft in size and weight and not transferring any imbalances to the pump must be used.
- The axial clearance between the coupling halves should be max. 1,5 mm. Rotation coupling parts must not touch any fixed pump or engine parts axially!
- Before connecting the lines, all plastic caps must be removed.
- All connections and lines must be installed free of tension and tight. We recommend only using sealing rings made of copper, aluminium or plastics. Never use hemp or similar materials. The pipes must be cleaned from any dirt and metal particles before the pump is connected.
- The suction connection (see Fig. 1) of the pump is filled with oil. Then the suction line is connected to thread connection „A“.
- The pressure/delivery line connect to thread connection „S“. (Fig. 1)
- Before switching on the pump, check that all locking valves in the pipes and check whether the pump has sufficient medium is available.
- Ensure that the pump is operated in the intended rotational direction (engraved arrow). Connect the motor according to the information on the type place and switch it on. Preventively provide a motor protection switch with overload function!
- The pump shaft is sealed to the outside with a mechanical seal made of the materials carbon / SiC and Viton elastomer.

Pumps must never be used as a fix point for the connected pipes. Any forces and moments appearing, e.g.

- Tensions
- Expansion of pipe lines due to temperature influence or reaction forces must be avoided.
- To prevent possible heat expansion of pipe lines, we recommend installing compensators.
- The suction line must be designed so that the flow speed is between 0.5 und max. 1.0 m/sec.
- The pressure line must only reach a maximum of 2 – 2.5 m/sec.
- The suction line must be vacuum-tight and placed in a rising fashion.
- Ensure that the pump and pipe system is not contaminated, e.g. by purging.
- When testing the pipe system for tightness, the max. permissible shaft sealing supply pressure must not be exceeded.

NOTICE

Never use water as purging liquid!
Danger of corrosion!

4 Commissioning

CAUTION

Ensure that the pump does not start up dry. It must be filled with oil.

Mechanically abrasive and chemically aggressive components in the medium reduce the pump service life.

Clear your pipe lines from any dirt or metal particles before connecting it to the pump.

Ensure correct rotational direction (see engraved arrow).

Before installation, ensure that the pump and drive shafts correspond exactly in axial direction. There must not be any radial force. Use a coupling suitable for the pump shaft in respect of size and weight. This way, you can avoid transferring imbalances onto the pump shaft.

- Before switching on the pump, check that all locking valves in the pipes and check whether the pump has sufficient medium is available.

NOTICE

For highly viscous media, a pump heating is prerequisite. To avoid cavitations and damage to the shaft sealings, the heating times must be observed under any circumstances.

Because of heat expansion, all valves must be open when heating.

5 Accessories

5.1 hp-Electrical standby and companion heater

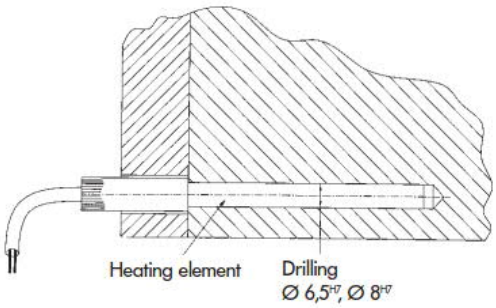

Fig. 3.

hp- Electrical standby and companion heaters

All hp-Pump models can be equipped with electrical heating system without thermostat at the factory.

Using this option is strictly recommend for using the pumps with "heavy fuel oil"!

6 Operation

6.1 Inspection and Maintenance

6.1.1 hp-Electrical standby and companion heaters

When replacing a defect electrical heater it is strongly recommended to insert only electrical heaters designed by the manufacturer. Otherwise:

- the medium can be heated to excessively high temperatures. Consequence thereof is e.g. gas release of the medium.
- The required operating temperature cannot be reached. Consequence thereof is e.g. the required engine power is greater than the available maximum engine power.
- Result of the too low or too high a temperature is, e.g. outage of the mechanical seal after a shorter time.

6.1.2 Oil filter

The pump is provided with a suction filter integrated in the suction line. The filter must be checked for dirt regularly and replaced if required. The mesh width of the filter element depends on the viscosity of the transported medium. Transported media with a high viscosity (heavy heating oil) require a filter element with a

mesh width of 500 µm and alternative for media with a low viscosity a filter element with mesh width 100 µm is recommend. The pump supply must be within a pressure range of -0.4 to 5 bar.

NOTICE

Filter elements must be disposed of under environmental considerations.

6.2 Preservation

After the test run, testing oil remains in the pump to preserve it. The parts not treated ex works must be re-treated by the operator according to the local conditions.
If the pump is inactive for an extended period or stored, it must be preserved with acid-free non-resinous oil and stored dryly.

6.3 Troubleshooting

Errors appearing		Possible cause
The pump does not prime		1, 2, 3, 4, 5, 11
The pump does not work at full capacity		3, 4, 5, 8, 9, 10
The pump is operating noisily		3, 4, 5, 6, 7, 9, 10, 12
The motor heats up		8, 9, 12
Uneven transport		3, 5, 9, 10
Shaft seal is not tight		7, 9, 13, 14, 15
No.	Possible cause	Removal
1.	No medium in the pump	Fill pump with medium
2.	Pump has the wrong rotational direction	Set rotational direction according to the engraved arrow
3.	Filter element, valve or lines are clogged	Check and clean parts
4.	Suction line or shaft seal are leaking	Check suction line, connection points and valves or shaft face seal
5.	Suction head too large	- Decrease height difference - Shorten line - Increase line diameter - Decrease medium viscosity by heating
6.	Axis error	Pump, coupling and motor: - Align shaft end precisely - Balance coupling
7.	Vibrations and pulsations in the system	- Use elastic bearings for the aggregate - Use hoses for connections
8.	Wrong speed	- Check motor speed and power consumption - Compare voltage and frequency to the type plate
9.	Medium too viscous	- Increase medium temperature - Lower speed
10.	Air inclusions or gas formation in the medium	- Remove leakages - Decrease suction height - Increase feed pressure
11.	Pump does not vent	Vent pressure line at the highest point
12.	Motor bearing damaged	Renew motor bearings
13.	Shaft seal damaged	Replace shaft seal
14.	Feed pressure too high or too low	- Decrease feed pressure in the system - Insert check valve on the pressure side
15.	Cold start when transporting heavy oil	Install pump heating and observe pre-heating time

NOTICE

For economic reasons, we recommend providing a reserve pump right at the burner.

7 Environment

Of course, hp-TECHNIK focuses on Environmental protection for its development work! To ensure that the environment does not take damage from our products - caused, e.g. by environmentally harmful media escaping unnoticed - we will even increase our efforts for the further development of our hp- Program.
We are continuously working to decrease effects on the environment as well as energy and resource consumption - far exceeding the measure required for compliance with environmental protection laws and regulations.
Environmentally compatible actions are not only a task for each and every employee, but must also be supported continuously by the management. We ensure that our environmental policy is effectively implemented. The technical and organizational procedures required for this are inspected regularly and continuously developed.
We support our customers in the environmentally compatible use of our products.

8 General Information

8.1 Application Risk

In case of failure or leakage may occur hazards to humans and the environment.

8.2 Usable fuel

Liquid fuels, mainly fuel oils derived from crude oil distillation, qualities according to DIN 51603 Part 1 – 5.
FAME – mix with fuel oil according to DIN 51603 Part 6 (FAME = Fatty Acid Methyl Ester)
FAME 100% DIN EN 14214 respectively EN 14213
Crude oils (max. fluid temperature 90°C)
Marine fuel ISO 8217 (HFO, MDF Kategorie ISO-F-DMX, DMA, DMB)
Cold-pressed bio fuel according to DIN V 51605

Characteristics for different fuels (reference value)

Fuel	Density (at 20 °C)	Kin. viscosity (at 40°C)	Max. temperature at spraying viscosity *)
Unit	[kg/m³]	[mm²/s]	[°C]
Fuel oil (DIN 51603-1)	max. 856	max. 3,6	15
Havy fuel oil (DIN 51603-3)		max. 1150	160
Re – raffinate (DIN 51603-4)		<45	90
Fuel oil (DIN 51603-6)	max. 860	max. 3,6	15
Marine Fuels (ISO 8217)	890 (15°C)	min: 1,4; max. 11	80
RME (DIN EN 14213)	856,6-896,6	3,5 – 5,0	28
Rape oil (DIN V 51605)	896,6-926,6	max. 36,0	85
Ecoil (Basis Rapsöl)	923,3	39,3	85 – 90
Palm oil	947,6	85,9	100 – 105

*) temperature values are approximate
Chemical resistance of all parts for specified types of fuel. Non-standard fuels are excluded from the warranty.

8.3 Painting

black RAL 9005.
temperature resistant to 150 °C, coating thickness min. 2µm
According to the requisitions, the executed painting may vary from the standard paint.

8.4 Directives

PED 97/23/EG
MD 2006/42/EG
EMC 2004/108/EG (89/336/EWG)
LVD 2006/95/EG (73/23/EWG)
ROHS 2000/53/EG
EU MEPS
WEEE 2002/95/EC
Observe the relevant national regulations.

8.5 Documentation

Test report on leak and functional testing.
Installation, maintenance and operating instructions with dimensional drawing and flow characteristics.

9 Dimensional drawing B – Industrial pump

Pipe connections
pipe thread DIN ISO 228-1

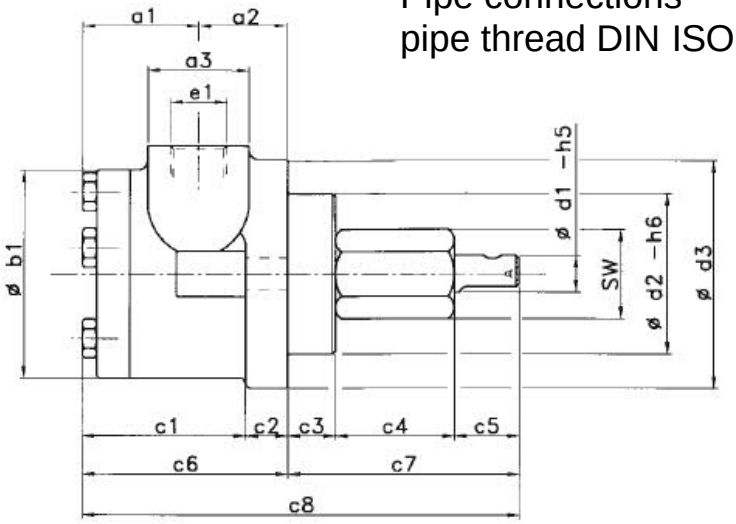

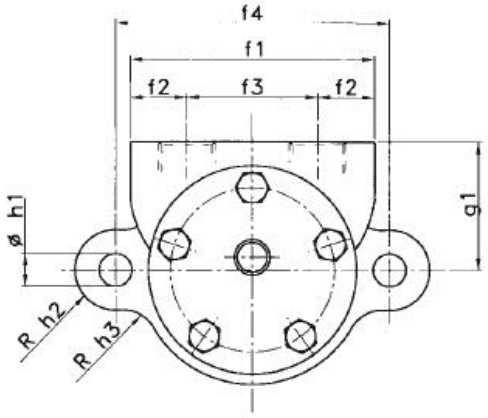

Gear rotor size Ø	Discharge l/h 1400 min⁻¹	Discharge l/h 2800 min⁻¹	a1	a2	a3	b1	c1	c2	c3	c4	c5	c6	c7	c8	d1
25	45 - 160	90 - 320	35,5	20	33	51	41,5	14	16	40	20	55,5	76	131,5	12
38	150 - 600	300 - 1200	43	26,5	38	70	55,5	14	16	40	20	69,5	76	145,5	12
56	1000 - 2000	–	48,5	38	45	96	71,5	15	18	79	27	86,5	124	210,5	18
75	3000 - 6700	–	64,5	83	70	115	129,5	18	25	65	37	147,5	127	274,5	22

Gear rotor size Ø	Discharge l/h 1400 min⁻¹	Discharge l/h 2800 min⁻¹	sw	e	d2	d3	e1	e2	f2	f3	f4	g1	h1	h2	h3
25	45 - 160	90 - 320	27	31,2	54	80	G 3/8"	71	16,5	38	92	43	11	13	13
38	150 - 600	300 - 1200	27	31,2	54	80	G 1/2"	82	19	44	92	43	11	13	13
56	1000 - 2000	–	46	53,1	60	100	G 3/4"	112	22,5	67	120	65	13	13	25
75	3000 - 6700	–	55	63,5	80	120	G 1 1/2"	170	35	100	150	90	14,5	15	–

Given a motive force of 56, the vacuum gauge and manometer connection is G 1/4" at the face.

10 Flow characteristics for hp-pumps series B

Flow characteristics B for fuel oil L/EL

Gear rotor Ø25

at 1400 min^{-1}

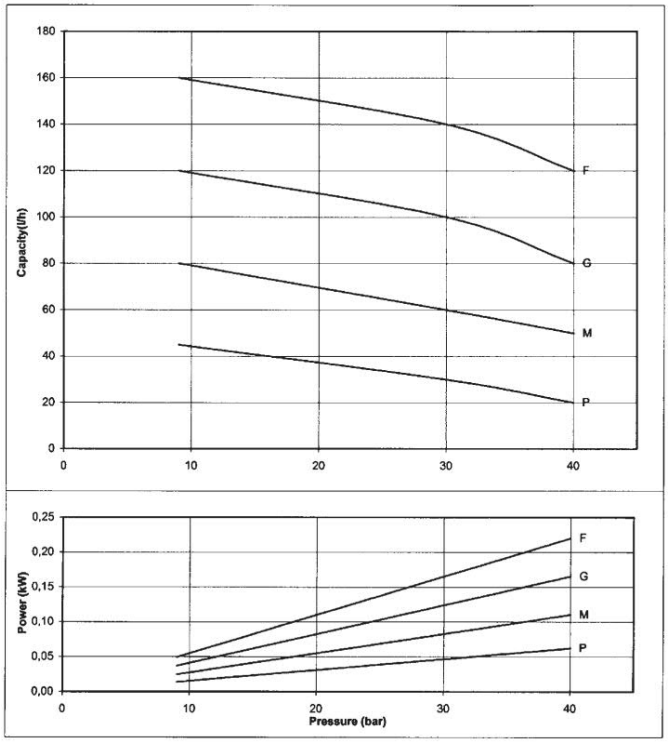

at 2800 min^{-1}

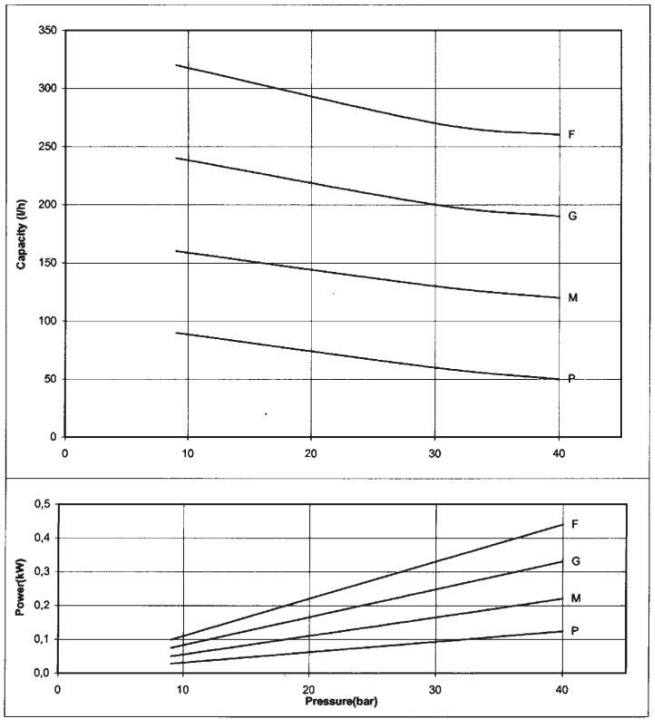

Gear rotor Ø38

at 1400 min^{-1}

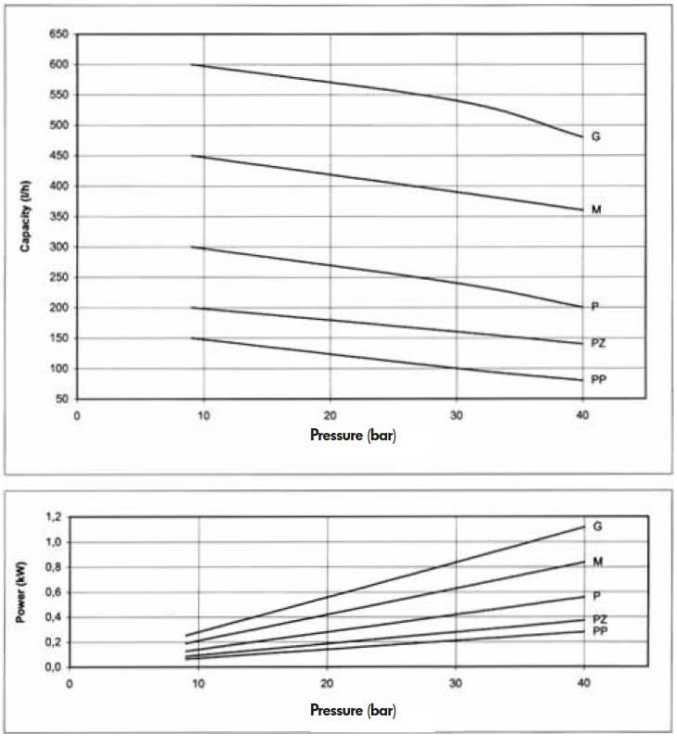

at 2800 min^{-1}

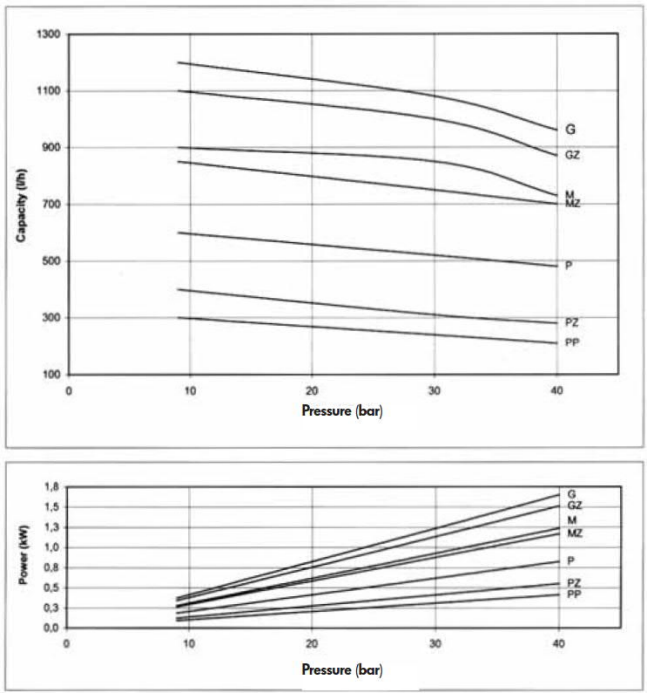

10/2014

Gear rotor size-Ø 56 at 1400 min^{-1}

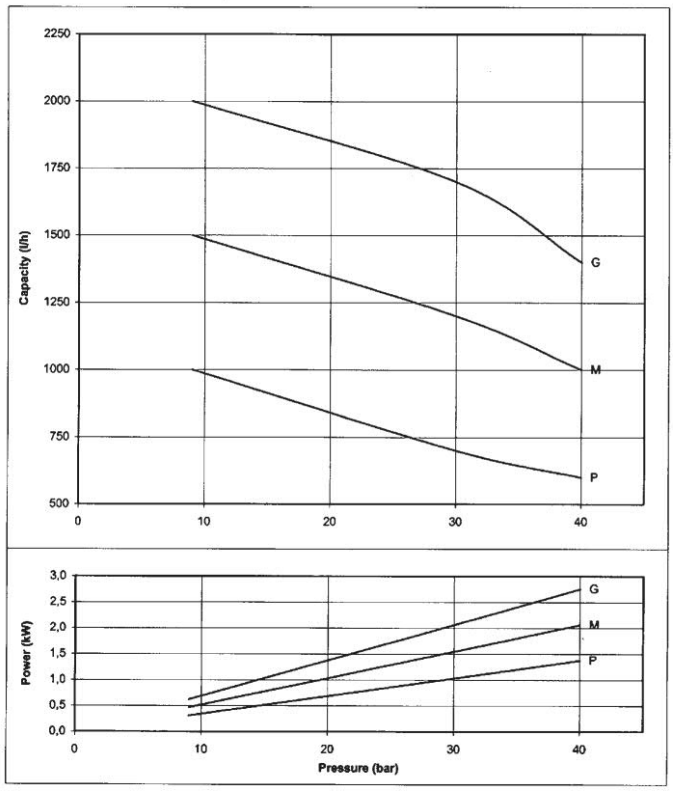

Gear rotor size-Ø 75 at 1400 min^{-1}

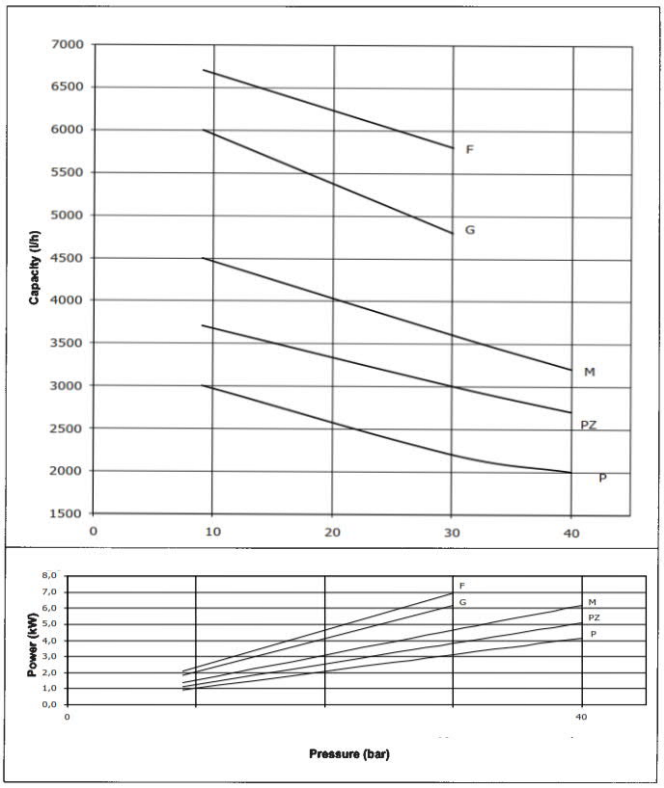

10/2014