UL, C-UL pending BSi pending (AQY280S, AQY284S) (AQY282S, AQW280S, AQW282S, AQW284S)

Panasonic
ideas for life

GU (General Use) Type [1, 2-Channel (Form A) 4, 8-Pin Type]

PhotoMOS RELAYS

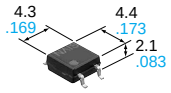

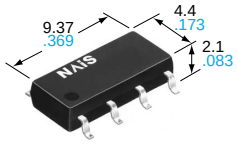

mm inch

FEATURES

1. Low cost type.

2. High sensitivity, Low ON resistance
Can control a maximum 0.5A (AQY282S, AQW282S) load current with a 5mA input current.
Low ON resistance of 2.5Ω (AQY282S, AQW282S).
Stable operation because there are no metallic contact parts.

3. Various package design (DIP4, SOP4, DIP8, SOP8 packages are available)

4. Low-level off state leakage current
The SSR has an off state leakage current of several milliamperes, where as the PhotoMOS relay has only 100pA even with the rated load voltage of 350V (AQY280S, AQW280S).

TYPICAL APPLICATIONS

- Modem
- Telephone equipment
- Security equipment
- Sensors
- Amusement

SOP TYPE

SOP 4pin

Type	Output rating*		Part No.		Packing quantity in tape and reel
	Load voltage	Load current	Picked from the 1/2-pin side	Picked from the 3/4-pin side	
AC/DC type	60 V	500 mA	AQY282SX	AQY282SZ	1,000 pcs.
	350 V	120 mA	AQY280SX	AQY280SZ	
	400 V	100 mA	AQY284SX	AQY284SZ	

*Indicate the peak AC and DC values.
Notes: (1) Tape package is the standard packing style. Also available in tube. (Part No. suffix “X” or “Z” is not needed when ordering; Tube: 100 pcs.; Case: 2,000 pcs.)
(2) For space reasons, the initial letters of the product number “AQY” and “S”, the package type indicator “X” and “Z” are omitted from the seal.

SOP 8pin

Type	Output rating*		Part No.		Packing quantity in tape and reel
	Load voltage	Load current	Picked from the 1/2/3/4-pin side	Picked from the 5/6/7/8-pin side	
AC/DC type	60 V	350 mA	AQW282SX	AQW282SZ	1,000 pcs.
	350 V	100 mA	AQW280SX	AQW280SZ	
	400 V	80 mA	AQW284SX	AQW284SZ	

* Indicate the peak AC and DC values.
Notes: (1) Tape package is the standard style. Also available in tube. (Part No. suffix “X” or “Z” is not needed when ordering; Tube: 50 pcs.; Case: 1,000 pcs.)
(2) For space reasons, the package type indicator “X” and “Z” are omitted from the seal.

ПРОМЭЛЕКТРОНИКА / sales@prom-elec.com

RATING

1. Absolute maximum ratings (Ambient temperature: 25°C 77°F)

SOP 4pin

Item		Symbol	AQY282S	AQY280S	AQY284S	Remarks
Input	LED forward current	I_F	50 mA			
	LED reverse voltage	V_R	5 V			
	Peak forward current	I_{FP}	1 A			f = 100 Hz, Duty factor = 0.1%
	Power dissipation	P_{in}	75 mW			
Output	Load voltage (peak AC)	V_L	60 V	350 V	400 V	
	Continuous load current (peak AC)	I_L	0.5 A	0.12 A	0.1 A	
	Peak load current	I_{peak}	1.5 A	0.3 A	0.24 A	100 ms (1 shot), V_L = DC
	Power dissipation	P_{out}	300 mW			
Total power dissipation		P_T	350 mW			
I/O isolatiom voltage		V_{iso}	1,500 V AC			
Operating temperature		T_{opr}	–40°C to +85°C –40°F to +185°F			Non-condensing at low temperature
Storage temperature		T_{stg}	–40°C to +100°C –40°F to +212°F			

SOP 8pin

Item		Symbol	AQW282S	AQW280S	AQW284S	Remarks
Input	LED forward current	I_F	50 mA			
	LED reverse voltage	V_R	5 V			
	Peak forward current	I_{FP}	1 A			f = 100 Hz, Duty factor = 0.1%
	Power dissipation	P_{in}	75 mW			
Output	Load voltage (peak AC)	V_L	60 V	350 V	400 V	
	Continuous load current (peak AC)	I_L	0.35 (0.5) A	0.1 (0.13) A	0.08 (0.1) A	( ): in case of using only 1 channel
	Peak load current	I_{peak}	1.05 A	0.3 A	0.24 A	100 ms (1 shot), V_L = DC
	Power dissipation	P_{out}	600 mW			
Total power dissipation		P_T	650 mW			
I/O isolatiom voltage		V_{iso}	1,500 V AC			
Operating temperature		T_{opr}	–40°C to +85°C –40°F to +185°F			Non-condensing at low temperature
Storage temperature		T_{stg}	–40°C to +100°C –40°F to +212°F			

2. Electrical characteristics (Ambient temperature: 25°C 77°F)

SOP 4pin

Item			Symbol	AQY282S	AQY280S	AQY284S	Condition
Input	LED operate current	Typical	I_{Fon}	1.8 mA			I_L = Max.
		Maximum		3.0 mA			
	LED turn off current	Minimum	I_{Foff}	0.2 mA			I_L = Max.
		Typical		1.6 mA			
	LED dropout voltage	Typical	V_F	1.14 V (1.25 V at I_F = 50mA)			I_F = 5 mA
		Maximum		1.5 V			
Output	On resistance	Typical	R_{on}	0.85Ω	20Ω	28Ω	I_F = 5 mA I_L = Max. Within 1 s on time
		Maximum		2.5Ω	25Ω	35Ω	
	Off state leakage current	Maximum	I_{Leak}	1μA			I_F = 0 mA V_L = Max.
Transfer characteristics	Turn on time*	Typical	T_{on}	0.9 ms	0.3 ms		I_F = 5 mA I_L = Max.
		Maximum		3 ms			
	Turn off time*	Typical	T_{off}	0.5 ms			I_F = 5 mA I_L = Max.
		Maximum		2 ms			
	I/O capacitance	Typical	C_{iso}	0.8 pF			f = 1 MHz V_B = 0V
		Maximum		1.5 pF			
	Initial I/O isolation resistance	Minimum	R_{iso}	1,000 MΩ			500 V DC

SOP 8pin

Item			Symbol	AQW282S	AQW280S	AQW284S	Condition
Input	LED operate current	Typical	I_{Fon}	1.8 mA			I_L = Max.
		Maximum		3.0 mA			
	LED turn off current	Minimum	I_{Foff}	0.2 mA			I_L = Max.
		Typical		1.6 mA			
	LED dropout voltage	Typical	V_F	1.14 V (1.25 V at I_F = 50mA)			I_F = 5 mA
		Maximum		1.5 V			
Output	On resistance	Typical	R_{on}	0.85Ω	20Ω	28Ω	I_F = 5 mA I_L = Max. Within 1 s on time
		Maximum		2.5Ω	25Ω	35Ω	
	Off state leakage current	Maximum	I_{Leak}	1μA			I_F = 0 mA V_L = Max.
Transfer characteristics	Turn on time*	Typical	T_{on}	0.9 ms	0.3 ms		I_F = 5 mA I_L = Max.
		Maximum		3 ms			
	Turn off time*	Typical	T_{off}	0.5 ms			I_F = 5 mA I_L = Max.
		Maximum		2 ms			
	I/O capacitance	Typical	C_{iso}	0.8 pF			f = 1 MHz V_B = 0V
		Maximum		1.5 pF			
	Initial I/O isolation resistance	Minimum	R_{iso}	1,000 MΩ			500 V DC

*Turn on/Turn off time

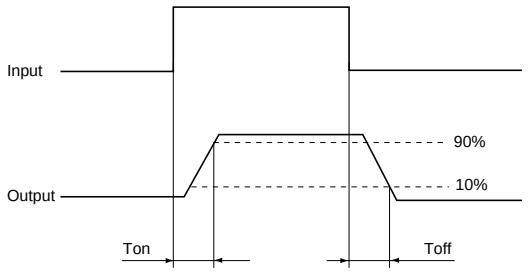

3-4 the terminal leads receive solder plating or solder dip plating.

REFERENCE DATA

[SOP type]

1. Load current vs. ambient temperature characteristics

Allowable ambient temperature: –40°C to +85°C
–40°F to +185°F

Type of connection: A

(1) AQY282S

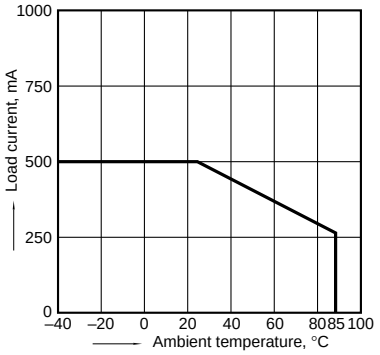

(2) AQY280S, AQY284S

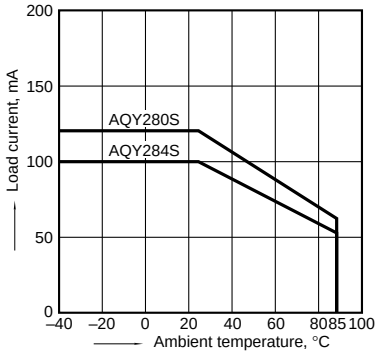

(3) AQW282S

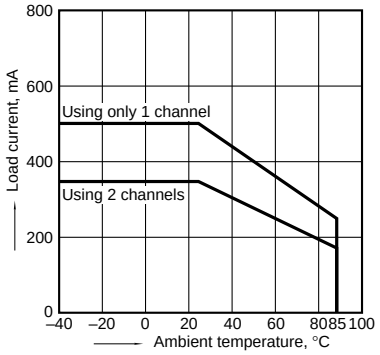

DIMENSIONS

mm inch

AQY28❍S

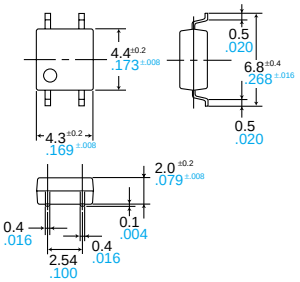

Recommended mounting pad
(Top view)

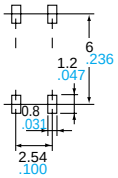

Terminal thickness = 0.15 .006
General tolerance: ±0.1 ±.004

Tolerance: ±0.1 ±.004

AQW28❍S

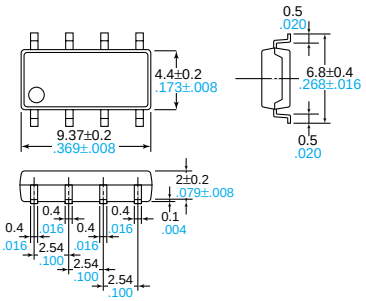

Recommended mounting pad
(Top view)

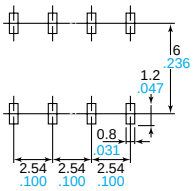

Terminal thickness = 0.15 .006
General tolerance: ±0.1 ±.004

Tolerance: ±0.1 ±.004

AQY28❍EH(A)

Through hole terminal type

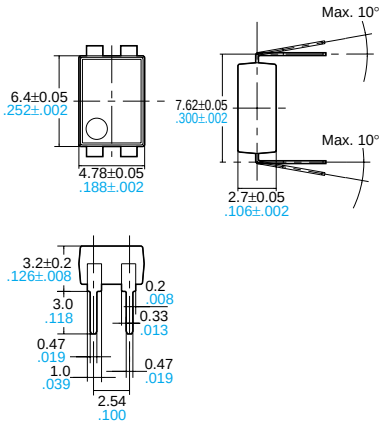

Terminal thickness = 0.2 .008
General tolerance: ±0.1 ±.004

Surface mount terminal type

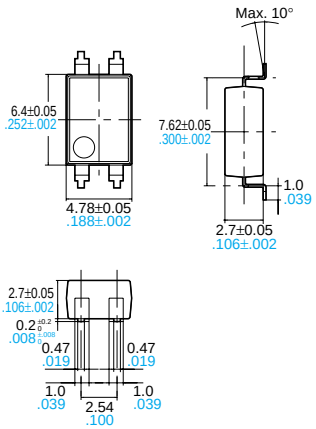

Terminal thickness = 0.2 .008
General tolerance: ±0.1 ±.004

PC board pattern (Bottom view)

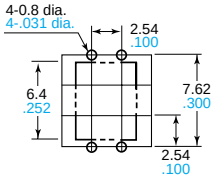

Tolerance: ±0.1 ±.004

Mounting pad (Top view)

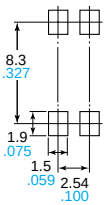

Tolerance: ±0.1 ±.004

AQW28❍EH(A)

Through hole terminal type

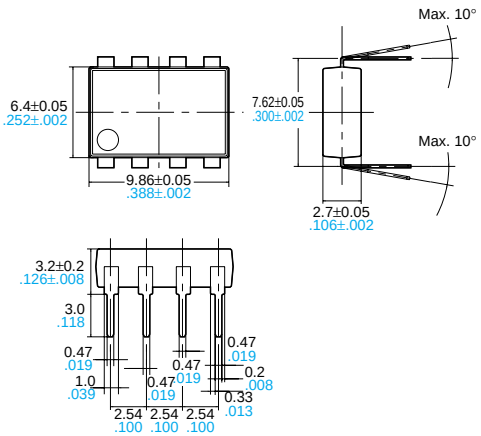

Terminal thickness = 0.2 .008
General tolerance: ±0.1 ±.004

Surface mount terminal type

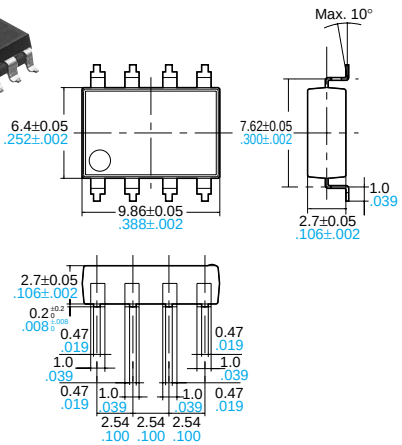

Terminal thickness = 0.2 .008
General tolerance: ±0.1 ±.004

PC board pattern
(Bottom view)

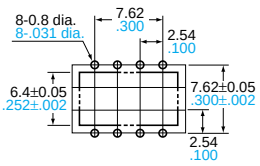

Tolerance: ±0.1 ±.004

Mounting pad (Top view)

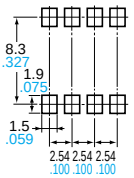

Tolerance: ±0.1 ±.004

Mouser Electronics

Authorized Distributor

Click to View Pricing, Inventory, Delivery & Lifecycle Information:

Panasonic:

AQW280S AQW280SX AQW280SZ