Honeywell

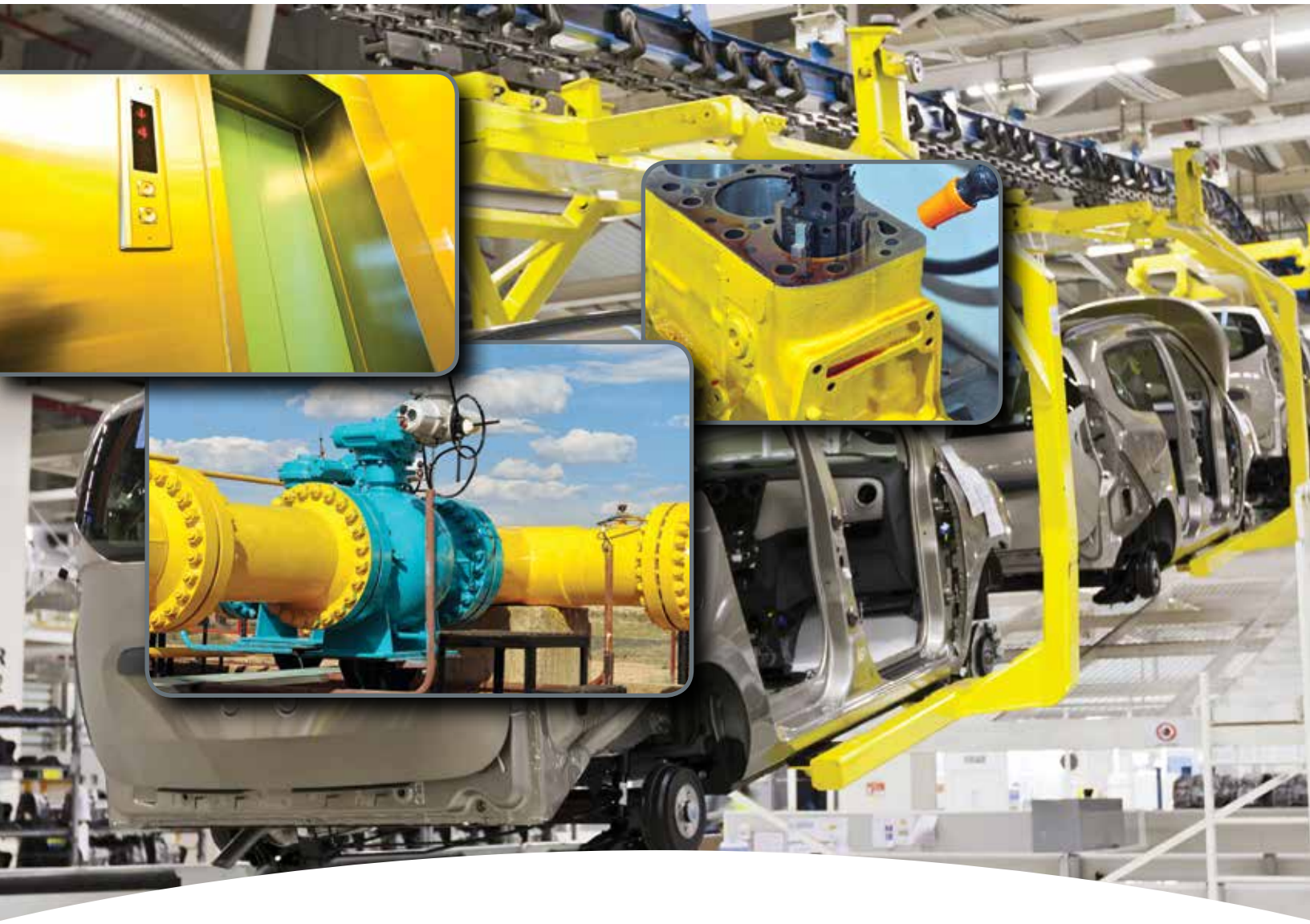

MICRO SWITCH™
General Purpose Limit Switches
SZL-WL Series

Datasheet

ПРОМЭЛЕКТРОНИКА / sales@prom-elec.com

MICRO SWITCH™ SZL-WL Series General Purpose Limit Switches

MICRO SWITCH™ SZL-WL Series general purpose limit switches are cost effective switches that may be used in a wide range of applications from general purpose conveyors to heavy-duty machinery. Rugged and reliable, the SZL-WL Series switches are specially designed for world-wide use and supported by Honeywell's vast experience in serving industries around the globe.

High quality product offerings combined with Honeywell's global sales and service resources makes the SZL-WL Series the smart choice for industries whose goal is to minimize plant downtime and reduce overall maintenance costs.

What makes our switches better?

- Small size and universal mounting footprint typically allows for use in constricted spaces and reduces replacement costs by providing interchangeability with similar style switches
- Wide variety of actuator heads and an assortment of actuators typically allows the SZL-WL Series to be applied in many types of applications
- IP67 construction often allows for use in dusty and dirty indoor and outdoor applications
- Mechanical service life of up to 10,000,000 operations promotes the durability required for use in many types of industries from factory floor to agriculture and/or machinery

COST OPTIMIZATION • EASE OF USE
RELIABILITY • GLOBAL ACCEPTANCE

Features and Benefits

INDUSTRIAL GLOBAL DESIGN

The SZL-WL Series is designed to the EN50041 mounting standard which promotes interchangability between other brands of limit switches.

Robust and reliable.

TWO CIRCUIT DOUBLE BREAK CONTACTS

The SZL-WL Series promotes reliable switching under industrial 10 amp current loads and typically allows end users the ability to control two circuits within one switch.

WIDE CHOICE OF ACTUATORS

Honeywell's SZL-WL Series offers side rotary, top and side plunger, and wobble stick style actuators that makes the switch reasonably adaptable to numerous types of applications.

OIL TIGHT, WATER TIGHT, DUST TIGHT

IP67 sealing protects against dust and moisture, and allows the SZL-WL Series to be used in dirty and rugged environments found in both indoor and outdoor applications.

Potential Applications

INDUSTRIAL

- Counting and position sensing on conveyors and assembly lines
- Fixture and tooling position sensing on automated metal removing machines
- Position indication on electric valves on pipelines
- Position indication on dampers, fume hoods, and HVAC/R equipment
- Truck ramp position and elevator car position/leveling control

SZL-WL Series

PRODUCT NOMENCLATURE

Figure 1. SZL-WL for Asia-Pacific Use Only

SZL-WL **A** — **A** —

Switch Type

SZL-WL Series General Purpose Limit Switch for Asia-Pacific only

Series Type

	Standard Series (blank)
A	High Overtravel Series - see Chart B
B	High Overtravel Series - see Chart B
C	High Overtravel Series - see Chart B
D	High Overtravel Series - see Chart B

Actuator Type

A	Standard side rotary	**H**	Side roller plunger
B	Adjustable side rotary	**I**	Top ball plunger
C	Side rotary rod	**J**	Side pin plunger
D	Side rotary fork (opposite direction rollers)	**K**	Wobble coil - long
P	Side rotary fork (same direction rollers)	**L**	Wobble coil - short
E	Top roller plunger	**M**	Wobble plastic rod
F	Top pin plunger	**N**	Wobble cat whisker
G	Top roller plunger (sealed)		

Special

Non-special

NOTE: Not all combinations of model code are available. Please contact your Honeywell provider/representative for assistance.

Figure 2. SZL-WL for North American Use Only

SZL-WL **A** — **A** —

Switch Type

SZL-WL Series General Purpose Limit Switch for North America only

Series Type

	Standard Series (blank)
C	High Overtravel Series - see Chart B

Actuator Type

A	Standard side rotary
B	Adjustable side rotary
C	Side rotary rod
E	Top roller plunger
F	Top pin plunger
K	Wobble coil - long

Conduit

N	0.5 - 14 NPT conduit

NOTE: Not all combinations of model code are available. Please contact your Honeywell provider/representative for assistance.

MICRO SWITCH™ General Purpose Limit Switches

Table 1. Chart A • Standard Type

	WL-A	WL-B[1]	WL-C[2]	WL-D, P	WL-E	WL-F	WL-G
Pretravel	15° ±5°	15° ±5°	15° ±5°	50° ±5°	1,7 mm [0.07 in] max.	1,7 mm [0.07 in] max.	1,7 mm [0.07 in] max.
Differential Travel	12°	12°	12°	–	1 mm [0.04 in]	1 mm [0.04 in]	1 mm [0.04 in]
Overtravel	30°	30°	30°	35°	5,6 mm [0.22]	6,4 mm [0.25]	5,6 mm [0.22]
Total travel	40°	40°	40°	90°	–	–	–
Operating torque	0,51 Nm [4.5 in-lb]	0,51 Nm [4.5 in-lb]	0,195 Nm [1.72 in-lb]	0,447 Nm [4.0 in-lb]	26,67 N [6 lb] (force)	26,67 N [6 lb] (force)	16,67 N [3.75 lb] (force)

	WL-H	WL-I	WL-J	WL-K[3]	WL-L[3]	WL-M[3]	WL-N[3]
Pretravel	2,8 mm [0.11 in]	1,7 mm [0.07 in] max.	2,8 mm [0.11 in] max.	20 mm ±10 mm [0.79 in ±0.039 in]	20 mm ±10 mm [0.79 in ±0.039 in]	40 mm ±20 mm [1.57 in ±0.79 in]	40 mm ±20 mm [1.57 in ±0.79 in]
Differential travel	1 mm [0.04 in]	1 mm [0.04 in]	1 mm [0.04 in]	–	–	–	–
Overtravel	5,6 mm [0.22 in]	6,4 mm [0.25 in]	4,0 mm [0.16 in]	–	–	–	–
Total travel	8,4 mm [0.33 in]	9,2 mm [0.36 in]	5,7 mm [0.22 in]	–	–	–	–
Operating force max.	40,03 N [9 lb]	26,67 N [6 lb]	40,03 N [9 lb]	1,47 N [0.33 lb]	1,47 N [0.33 lb]	1,47 N [0.33 lb]	0,28 N [0.06 lb]

[1] Operating characteristics of the WL-B are measured at the arm length of 38 mm [1.5 in]
[2] Operating characteristics of the WL-C are measured at the lever length of 140 mm [5.5 in]
[3] Operating characteristics of these types are measured at the tip of the actuator

Table 2. Chart B • Overtravel/High Precision Type

	WLA-A	WLB-A	WLA-B[1]	WLB-B[1]	WLA-C[2]	WLB-C[2]	WLC-A
Pretravel	18° ±4°	10° (-1°/+2°)	18° ±4°	10° (-1°/+2°)	18° ±4°	10° (-1°/+2°)	25° ±5°
Differential travel	10°	7°	10°	–	10°	7°	16°
Overtravel	55°	65°	55°	65°	55°	65°	60°
Total travel	80°	80°	80°	80°	80°	80°	90°
Operating torque max.	0,37 Nm [3.3 in-lb]	0,37 Nm [3.3 in-lb]	0,37 Nm [3.3 in-lb]	0,37 Nm [3.3 in-lb]	0,398 Nm [3.52 in-lb]	0,398 Nm [3.52 in-lb]	0,34 Nm [3.0 in-lb]

	WLC-B[1]	WLC-C[2]	WLD-A	WLD-B[1]	WLD-C[2]	WLE-A	WLE-B	WLE-C
Pretravel	25° ± 5°	25° ± 5°	20° max.	20° max.	20° max.	6° ±1°	5° (+2°/-0°)	5° (+2°/-0°)
Differential travel	16°	16°	10°	10°	10°	3°	3°	3°
Overtravel	60°	60°	70°	70°	70°	40°	40°	40°
Total travel	90°	90°	90°	90°	90°	40°	40°	40°
Operating torque max.	0,34 Nm [3.0 in-lb]	0,36 Nm [3.16 in-lb]	0,365 Nm [3.23 in-lb]	0,365 Nm [3.23 in-lb]	0,398 Nm [3.52 in-lb]	0,51 Nm [4.5 in-lb]	0,51 Nm [4.5 in-lb]	0,195 Nm [1.72 in-lb]

[1] Operating characteristics are measured at the arm length of 38 mm [1.5 in]
[2] Operating characteristics are measured at the lever length of 140 mm [5.5 in]

SZL-WL Series

Table 3. Specifications

Characteristic	Parameter
Product type	Honeywell General Purpose Limit Switch
Actuators	side rotary, top roller plunger, top plunger, sealed top roller plunger, side roller plunger, side pin plunger, top ball plunger, wobble/cat whisker, wobble/plastic rod, wobble/coil spring
Circuitry	single pole double throw double break
Electrical	10 A
Housing material	aluminum die-cast
Housing type	industrial
Conduit	PF 1/2, 1/2 in-14 NPT
Sealing	IP67
Operating temperature	-10 °C to 80 °C [14 °F to 176 °F]
Mechanical life	10,000,000 operations
Agency approvals and standards	UL, CE, CSA
Sealed	Industrial

Circuitry (same polarity)

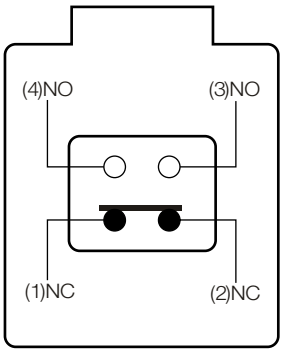

Electric Life Curve

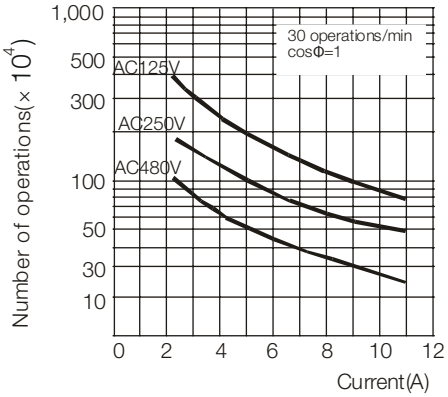

MICRO SWITCH™ General Purpose Limit Switches

O.T. • Operating torque
O.F. • Operating force
P.T. • Pretravel
O.T. • Overtravel
D.T. • Differential travel

ORDER GUIDE/RECOMMENDED LISTINGS

Table 4. Product listings

	Part Number	Actuation	Note	O.T. Nm [in-lb]	Bar chart	P.T. (max.)	O.T.	D.T. (max.)	Conduit
	SZL-WL-A	side rotary standard lever, standard	–	0,51 [4.5]	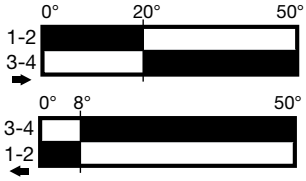	20°	30°	12°	PF 1/2
	SZL-WL-A-N								1/2 in NPT
	SZL-WLA-A	side rotary standard lever, high overtravel	–	0,37 [3.3]	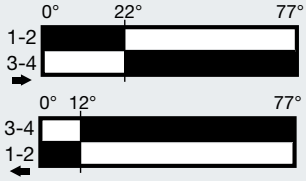	22°	55°	10°	PF 1/2
	SZL-WLB-A	side rotary standard lever, high overtravel	–	0,37 [3.3]	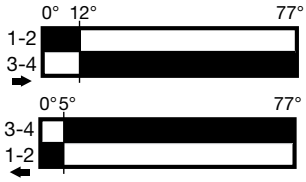	12°	65°	7°	PF 1/2
	SZL-WLC-A	side rotary standard lever, high overtravel	–	0,34 [3.0]		30°	60°	16°	PF 1/2
	SZL-WLC-A-N								1/2 in NPT
	SZL-WLD-A	side rotary standard lever, high overtravel	–	0,37 [3.23]	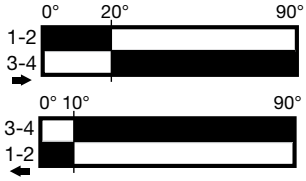	20°	70°	10°	PF 1/2
	SZL-WLE-A	side rotary standard lever, high precision	1	0,51 [4.5]		7°	40°	3°	PF 1/2

Note:
1. Operating characteristics are measured at the actuator arm length of 38 mm [1.5 in]

SZL-WL Series

O.T. • Operating torque
O.F. • Operating force
P.T. • Pretravel
O.T. • Overtravel
D.T. • Differential travel

Table 4. Product listings, continued

	Part Number	Actuation	Note	O.T. Nm [in-lb]	Bar chart	P.T. (max.)	O.T.	D.T. (max.)	Conduit
	SZL-WL-B	side rotary adjustable lever, standard	1	0,51 [4.5]	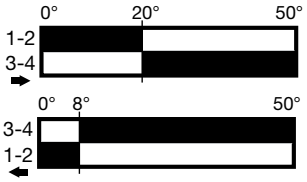	20°	30°	12°	PF 1/2
	SZL-WL-B-N								1/2 in NPT
	SZL-WLA-B	side rotary adjustable lever, high overtravel	1	0,37 [3.3]		22°	55°	10°	PF 1/2
	SZL-WLB-B	side rotary adjustable lever, high overtravel	1	0,37 [3.3]	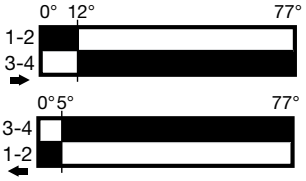	12°	65°	7°	PF 1/2
	SZL-WLC-B	side rotary adjustable lever, high overtravel	1	0,34 [3.0]	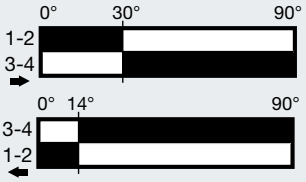	30°	60°	16°	PF 1/2
	SZL-WLC-B-N								1/2 in NPT
	SZL-WLD-B	side rotary adjustable lever, high overtravel	1	0,37 [3.23]	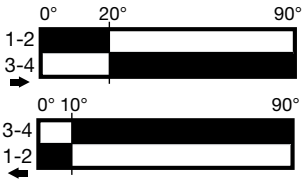	20°	70°	10°	PF 1/2
	SZL-WLE-B	side rotary adjustable lever, **high precision**	2	0,51 [4.5]		5°	40°	3°	PF 1/2

Notes:
1. Operating characteristics are measured at the actuator arm length of 38 mm [1.5 in]
2. Operating characteristics are measured at the actuator arm length of 140 mm [5.5 in]

MICRO SWITCH™ General Purpose Limit Switches

O.T. • Operating torque
O.F. • Operating force
P.T. • Pretravel
O.T. • Overtravel
D.T. • Differential travel

Table 4. Product listings, continued

	Part Number	Actuation	Note	O.T. Nm [in-lb]	Bar chart	P.T. (max.)	O.T.	D.T. (max.)	Conduit
	SZL-WL-C	side rotary rod adjustable, standard	2	0,195 [1.72]	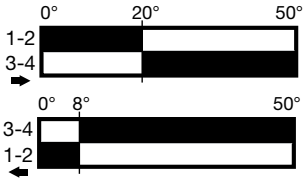	20°	30°	12°	PF 1/2
	SZL-WL-C-N								1/2 in NPT
	SZL-WLA-C	side rotary rod adjustable, high overtravel	2	0,398 [3.52]		22°	55°	10°	PF 1/2
	SZL-WLB-C	side rotary rod adjustable, high overtravel	2	0,398 [3.52]	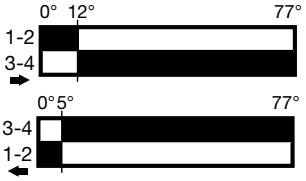	12°	65°	7°	PF 1/2
	SZL-WLC-C	side rotary rod adjustable, high overtravel	2	0,38 [3.16]		30°	40	16°	PF 1/2
	SZL-WLC-C-N								1/2 in NPT
	SZL-WLD-C	side rotary rod adjustable, high overtravel	2	0,398 [3.52]	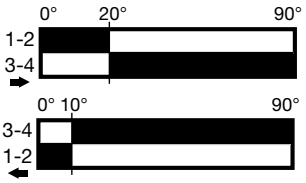	20°	70°	10°	PF 1/2
	SZL-WLE-C	Side rotary rod adjustable, **high precision**	1	0,195 [1.72]		5°	40°	3°	PF 1/2
	SZL-WL-D **SZL-WL-P**	fork lock lever, opposite direction rollers -D); same direction rollers (-P)		0,447 [4.0]	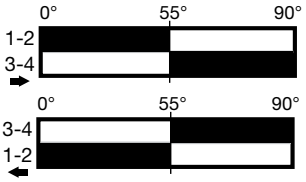	55°	35°	–	PF 1/2

Notes:
1. Operating characteristics are measured at the actuator arm length of 38 mm [1.5 in]
2. Operating characteristics are measured at the actuator arm length of 140 mm [5.5 in]

SZL-WL Series

O.T. • Operating torque
O.F. • Operating force
P.T. • Pretravel
O.T. • Overtravel
D.T. • Differential travel

Table 4. Product listings, continued

	Part Number	Actuation	Note	O.F. N [lb]	Bar chart	P.T. (max.)	O.T.	D.T. (max.)	Conduit
	SZL-WL-E	top roller plunger	–	26,67 [6.0]	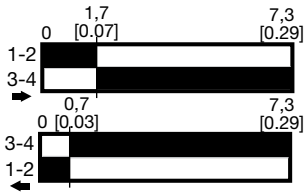	1,7 mm [0.07 in]	5,6 mm [0.22 in]	1 mm [0.04 in]	PF 1/2
	SZL-WL-E-N								1/2 in NPT
	SZL-WL-F	top plunger	–	26,67 [6.0]		1,7 mm [0.07 in]	6,4mm [0.25 in]	1 mm [0.04 in]	PF 1/2
	SZL-WL-F-N								1/2 in NPT
	SZL-WL-G	top roller plunger, sealed	–	16,67 [3.75]	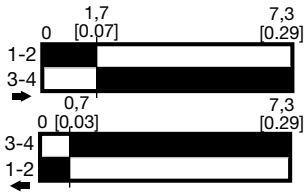	1,7 mm [0.07 in]	5,6 mm [0.22 in]	1 mm [0.04 in]	PF 1/2
	SZL-WL-H	side roller plunger	–	40,03 [9.0]	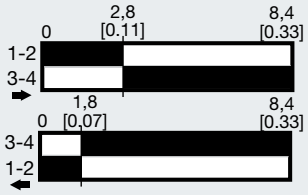	2,8 mm [0.11 in]	5,6 mm [0.22 in]	1 mm [0.04 in]	PF 1/2
	SZL-WL-I	top ball plunger	–	26,67 [6.0]	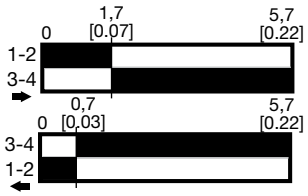	1,7 mm [0.07 in]	4 mm [0.157 in]	1 mm [0.04 in]	PF 1/2
	SZL-WL-J	side plunger	–	40,03 [9.0]	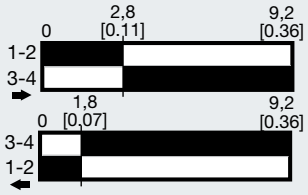	2,8 mm [0.11 in]	6,4 mm [0.25 in]	1 mm [0.04 in]	PF 1/2

MICRO SWITCH™ General Purpose Limit Switches

O.T. • Operating torque
O.F. • Operating force
P.T. • Pretravel
O.T. • Overtravel
D.T. • Differential travel

Table 4. Product listings, continued

	Part Number	Actuation	Note	O.F. N [lb]	Bar chart	P.T. (max.)	O.T.	D.T. (max.)	Conduit
	SZL-WL-K	wobble-coil spring Ø 6,5 mm [Ø 0.256 in]	3, 4	1,47 [0.33]	–	20 mm ±10 mm [0.79 in ±0.39 in]	–	–	PF 1/2
	SZL-WL-K-N								1/2 in NPT
	SZL-WL-L	wobble-coil spring Ø 4,8 mm [Ø 0.189 in]	3, 4	1,47 [0.33]	–	20 mm ±10 mm [0.79 in ±0.39 in]	–	–	PF 1/2
	SZL-WL-M	wobble-plastic rod Ø 8,0 mm [Ø 0.315 in]	3, 4	1,47 [0.33]	–	40 mm ±20 mm [1.57 in ±0.79 in]	–	–	PF 1/2
	SZL-WL-N	wobble-steel wire Ø 1,0 mm [Ø 0.04 in]	3, 4	0,28 [0.06]	–	40 mm ±20 mm [1.57 in ±0.79 in]	–	–	PF 1/2

Notes:
1. Operating characteristics are measured at the actuator arm length of 38 mm [1.5 in]
2. Operating characteristics are measured at the actuator arm length of 140 mm [5.5 in]
3. Operating characteristics are measured at the tip of the actuator
4. Operating force is measured from the tip of the wobble

SZL-WL Series

DIMENSIONS mm [in]

Figure 1. SZL-WL-A

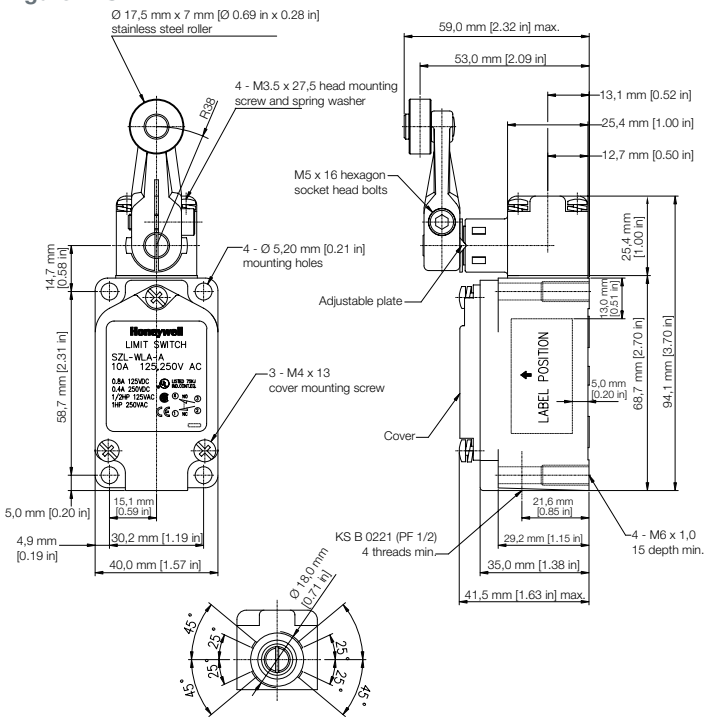

Figure 2. SZL-WL-B

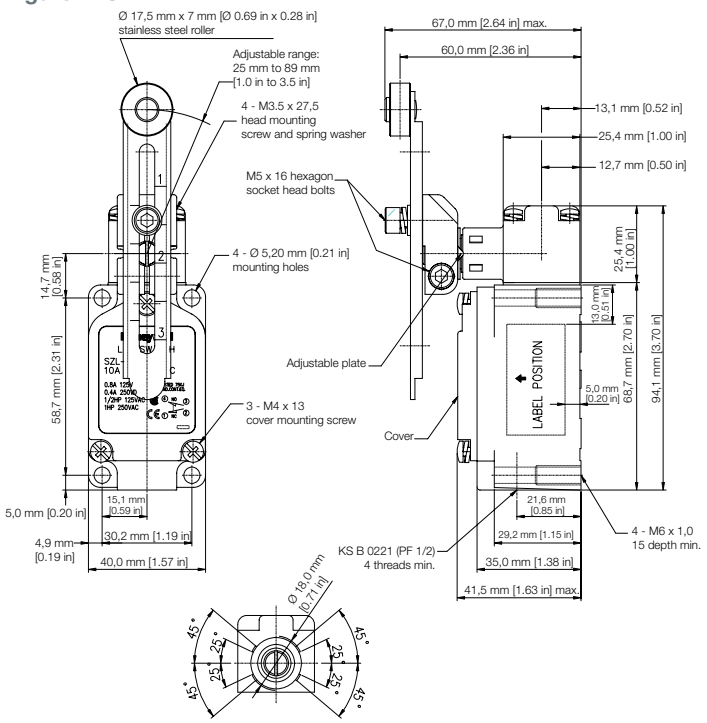

Figure 3. SZL-WL-C

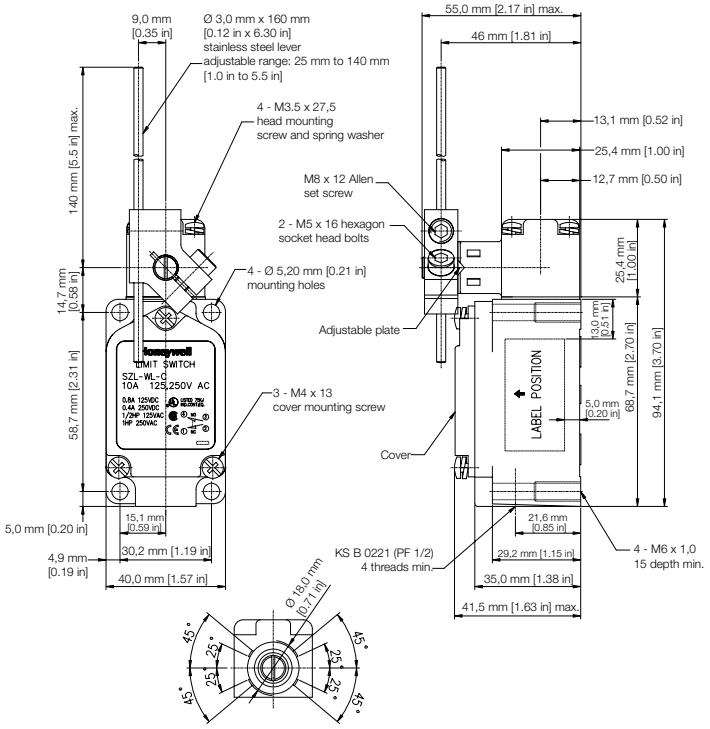

Figure 4. SZL-WL-D and SZL-WL-P

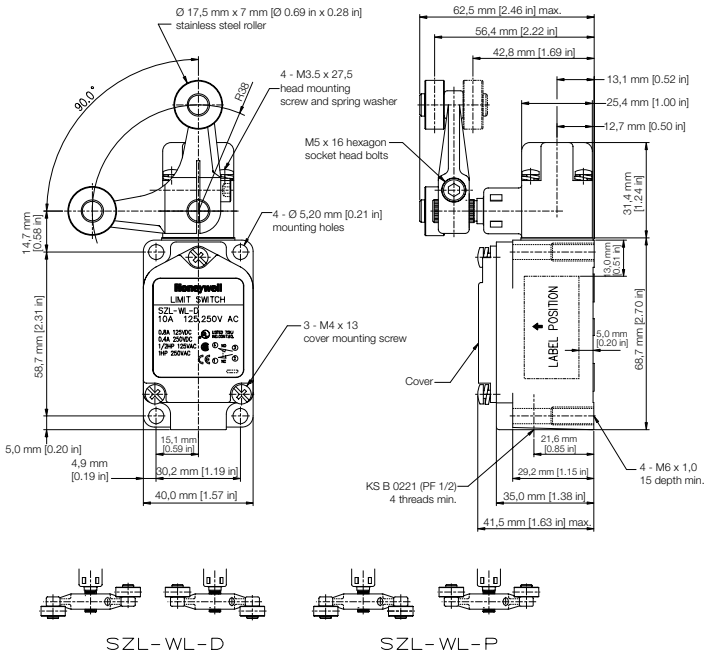

MICRO SWITCH™ General Purpose Limit Switches

DIMENSIONS mm [in]

Figure 5. SZL-VL-E

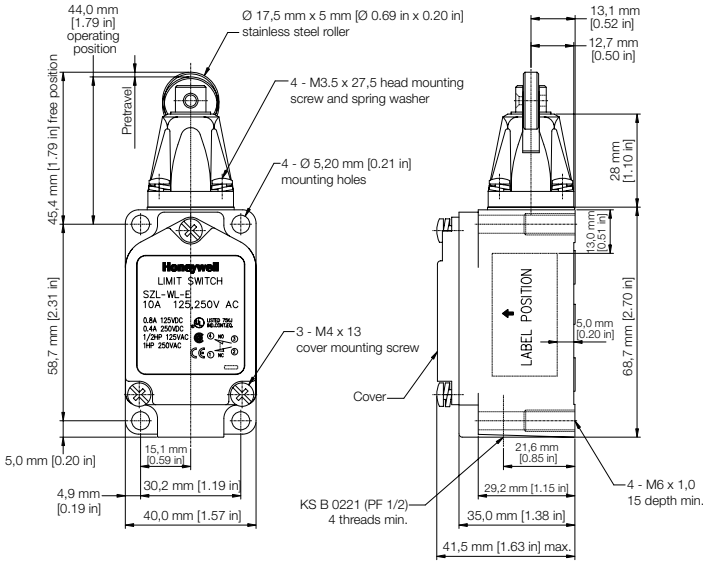

Figure 6. SZL-WL-F

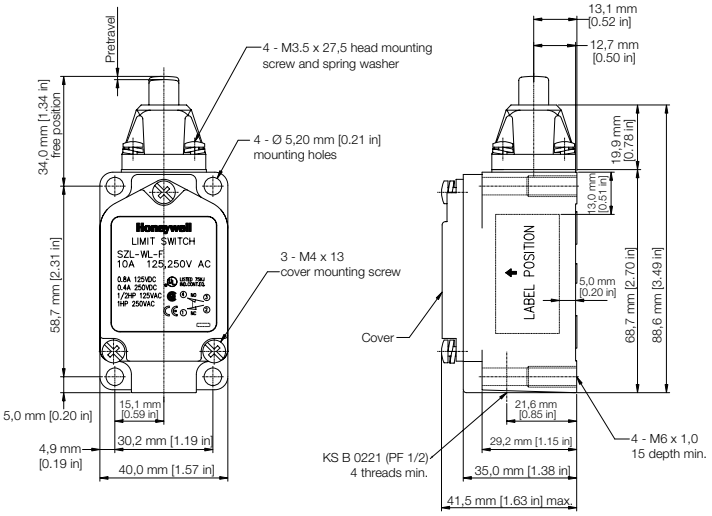

Figure 7. SZL-WL-G

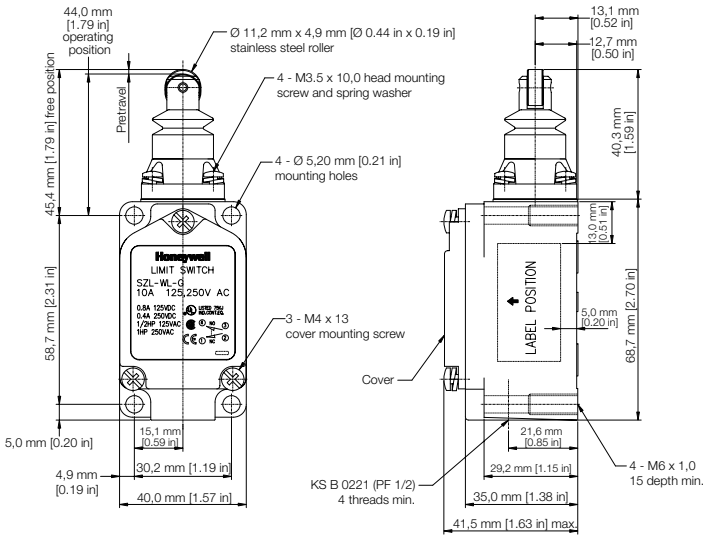

Figure 8. SZL-WL-H

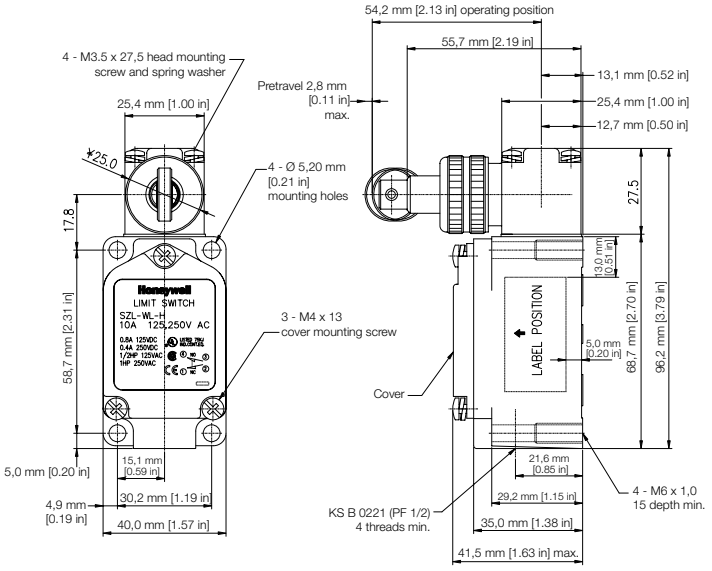

SZL-WL Series

DIMENSIONS mm [in]

Figure 9. SZL-WL-I

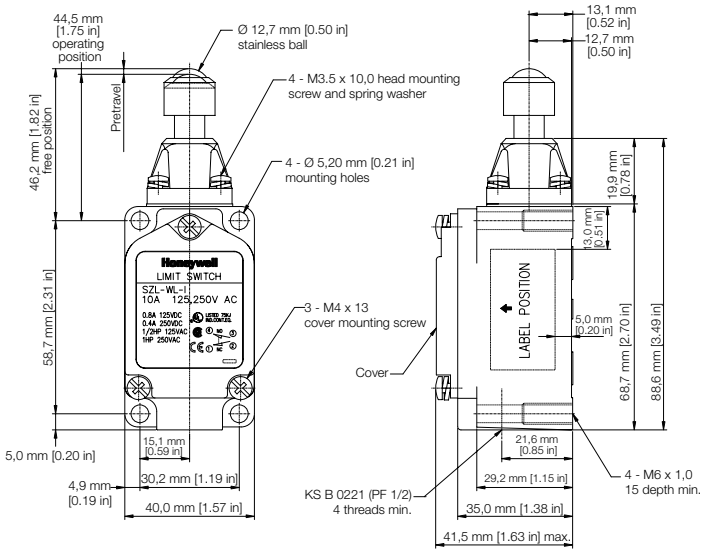

Figure 10. SZL-WL-J

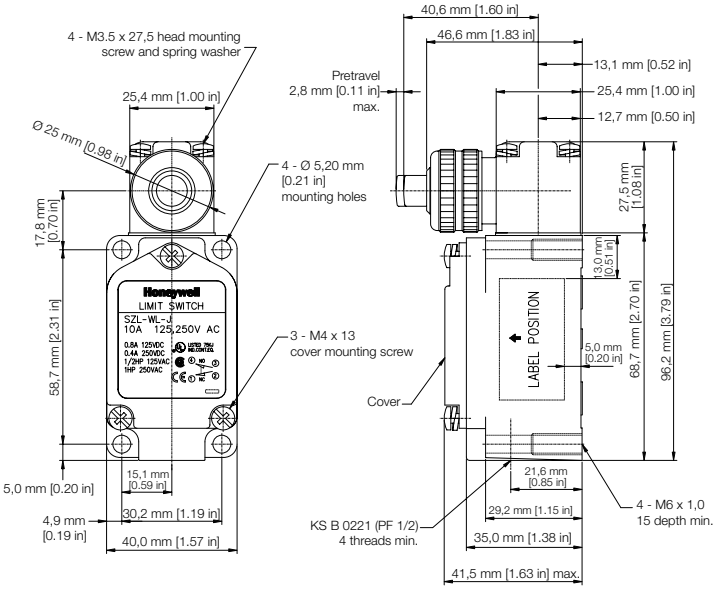

Figure 11. SZL-WL-K

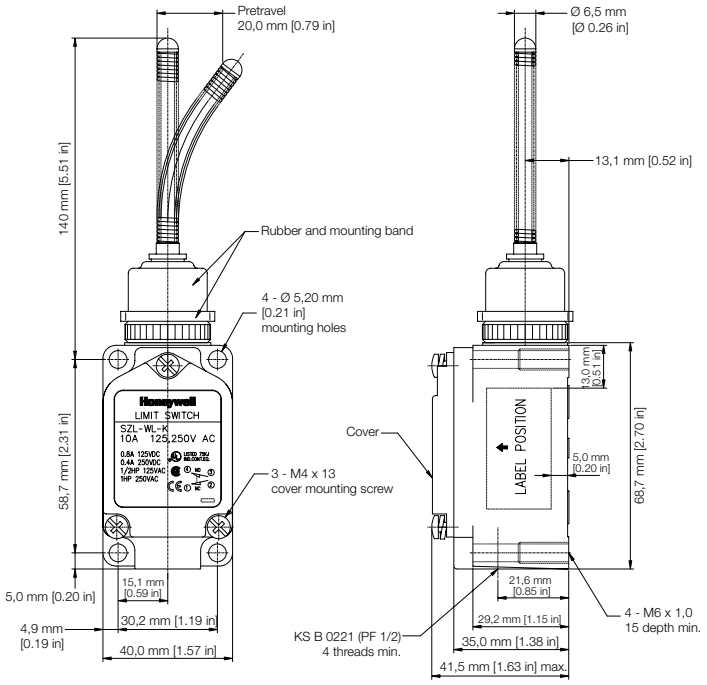

Figure 12. SZL-WL-L

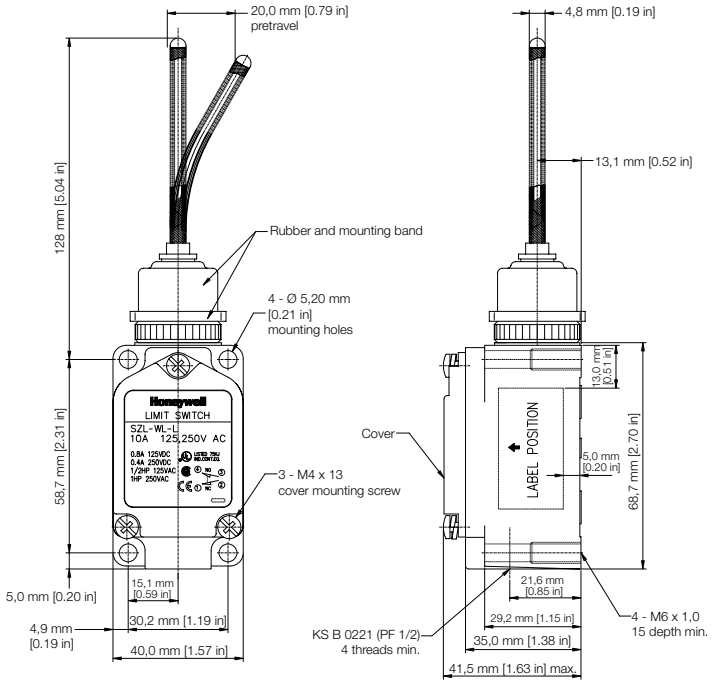

MICRO SWITCH™ General Purpose Limit Switches

DIMENSIONS mm [in]

Figure 13. SZL-WL-M

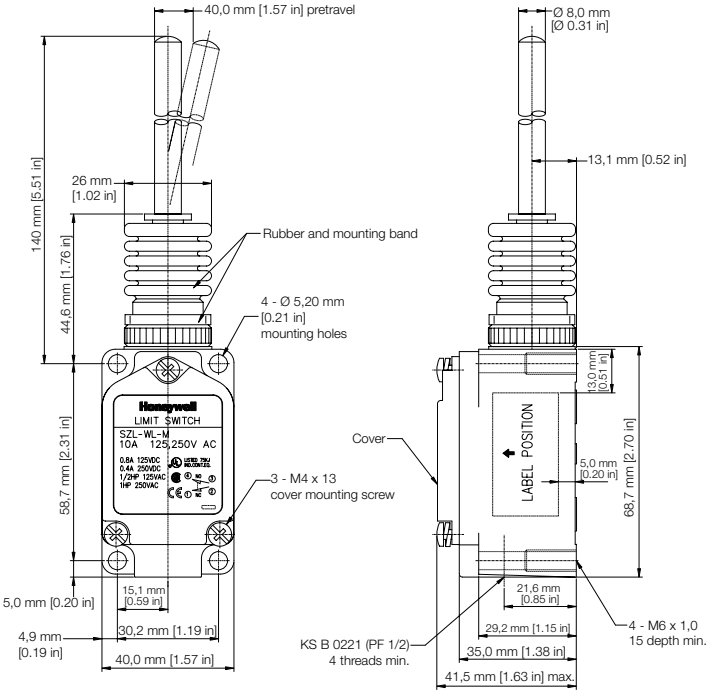

Figure 14. SZL-WL-N

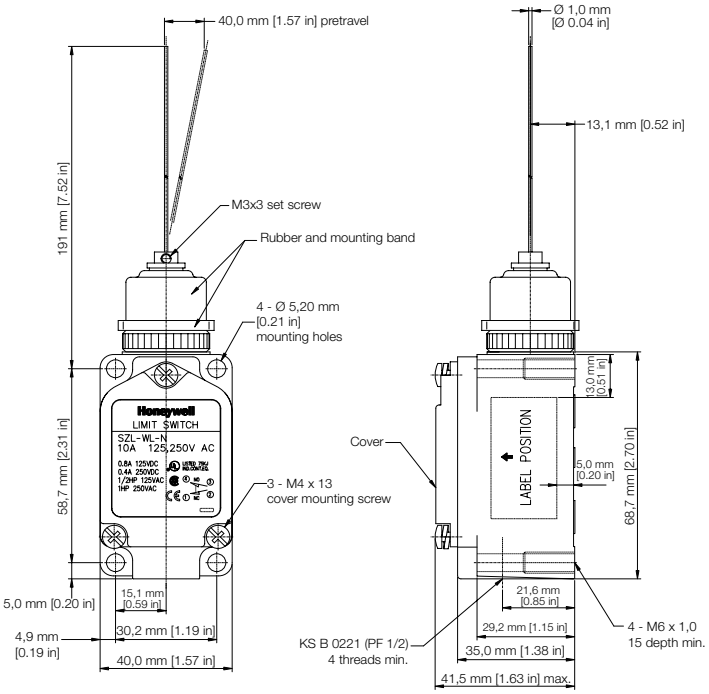

SET POSITION INDICATOR

Proper Operation Zone

- The two convex indicators on the shaft housing show the operating zones for proper operation, thereby, simplifying installation and maintenance.
- Too much over-travel may cause shortened mechanical life due to possible damage to the switch mechanism.

Figure 15. Side Rotary Proper Operation Zone

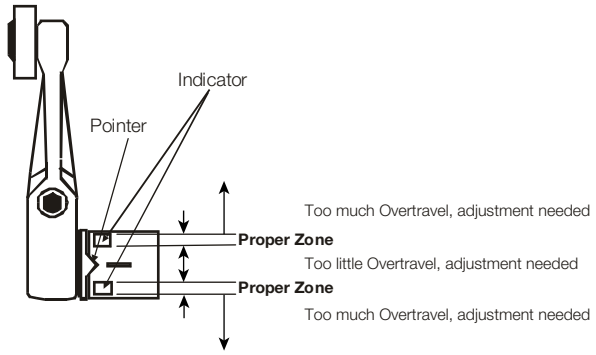

MOUNTING DIMENSIONS

Figure 16. Surface Mount

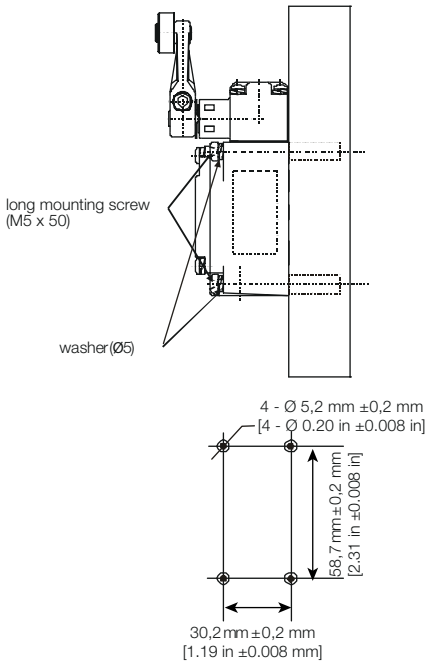

Figure 17. Through-Hole Mount

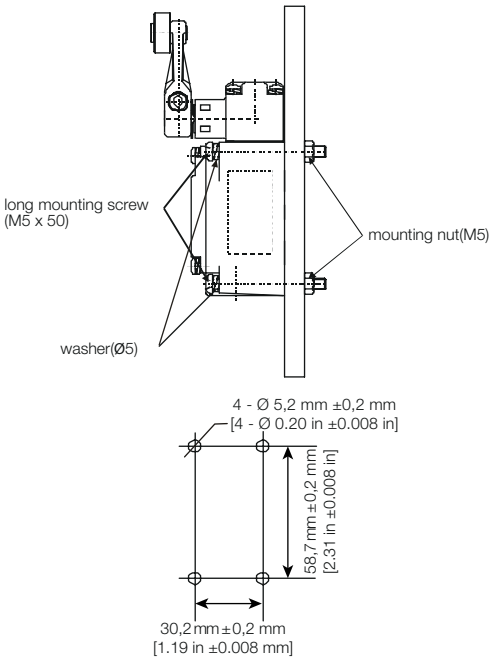

Figure 18. Rear Mount

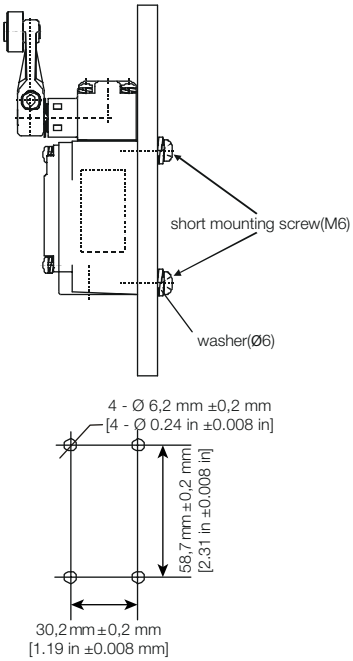

ADJUSTABLE OPERATING CHARACTERISTICS

Standard/High Precision Series

- All side rotary switches of Standard and High Precision models can be set to actuate on one side only. Clockwise and counterclockwise mode is available by rotating the plunger inside the operating head as shown below.

Figure 19. Standard/High Precision Type Switches

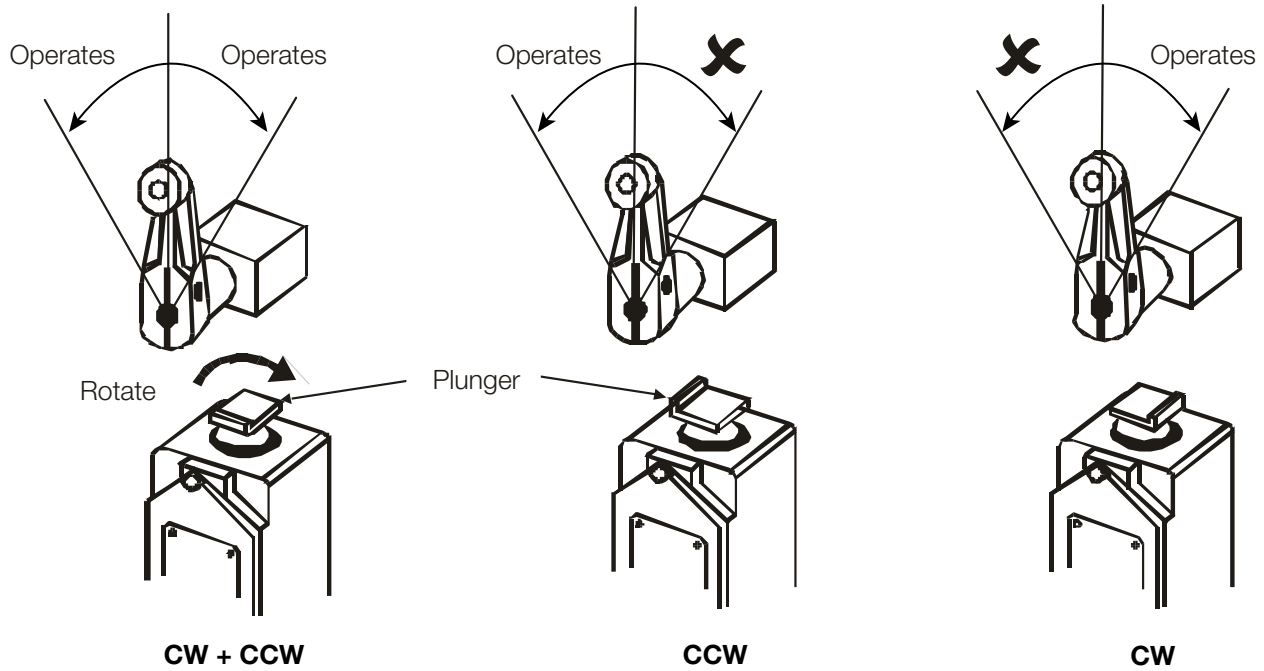

OVERTRAVEL "D" SERIES

- The Overtravel "D" Series switches can be set to one side actuation mode by rotating the cam located inside the operating head as shown below.

Figure 20. Overtravel "D" Series

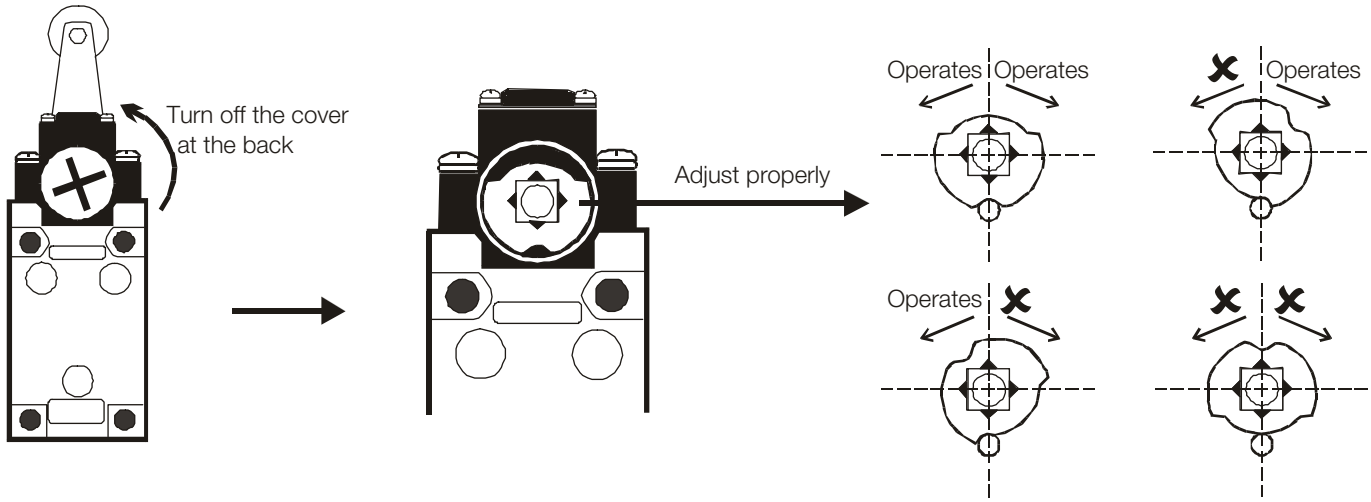

OPERATING HEAD DIRECTION CHANGE

90° Incremental Rotation

- Most SZL-WL –D, P, E, G, H, and J Series switches allow for the operating head to be rotated to any of the four positions indicated below. Loosen the four head lock screws and rotate the head to the desired position.
  Note* The head of the Overtravel "D" Series can be set **ONLY** to directions **1** and **3**.

Figure 21. SZL-WL Head Rotation

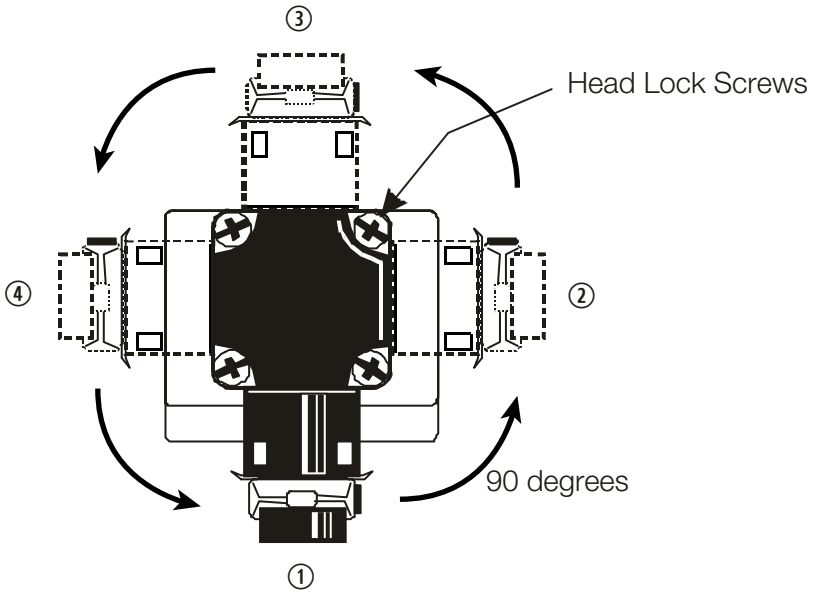

SZL-WL Series

CABLES

Product Nomenclature

ZLC — 4 D S D — 3

Cable	Number of Strands	Voltage	Shape	Type	Actuator Type
ZLC Series Cable for use with SZL-WL Series Limit Switches	**2** Two (2) strands	**A** ac	**S** Straight	**F** Female	**03** 0,3 m [11.80 in]
	3 Three (3) strands	**D** dc	**L** Elbow shape	**M** Male	**2** 2 m [6.56 ft]
	4 Four (4) strands				**3** 3 m [9.84 ft]
					5 5 m [16.40 ft]
					7 7 m [22.96 ft]

Terminal number and wire color
Terminal 1: Brown
Terminal 2: White
Terminal 3: Blue
Terminal 4: Black

Figure 22. ZLC-4DLF-__

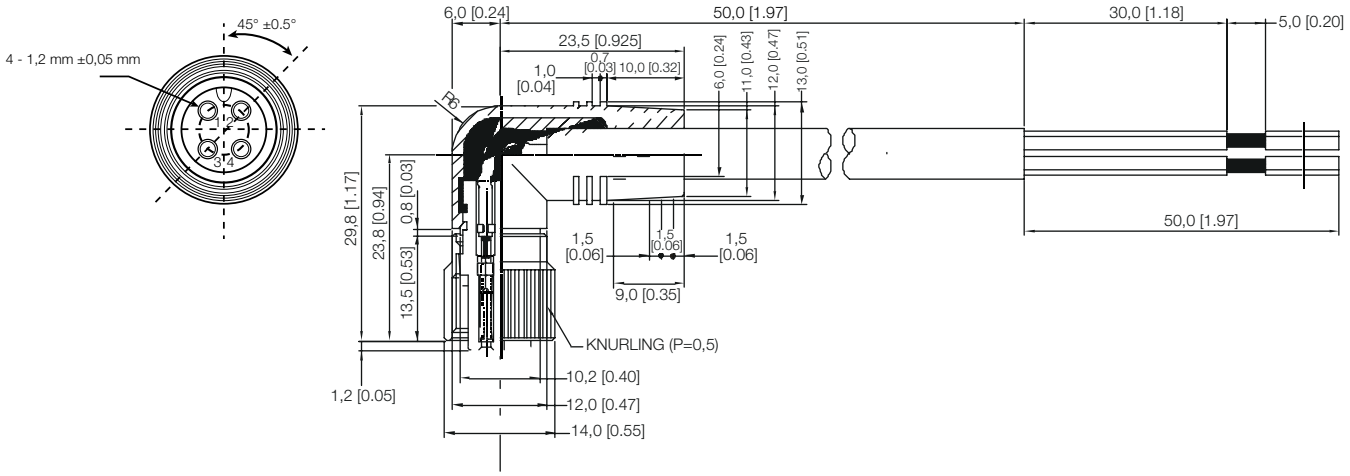

Figure 23. ZLC-4DSF-__

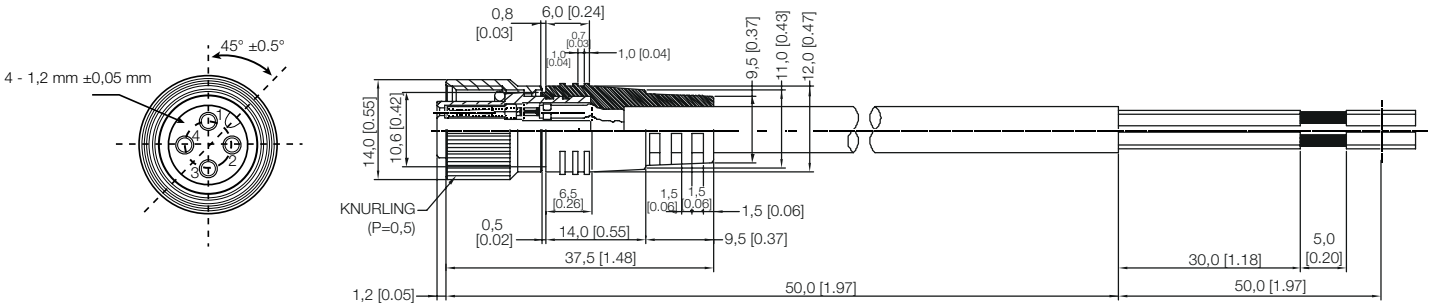

Figure 24. ZLC-4DSM-__

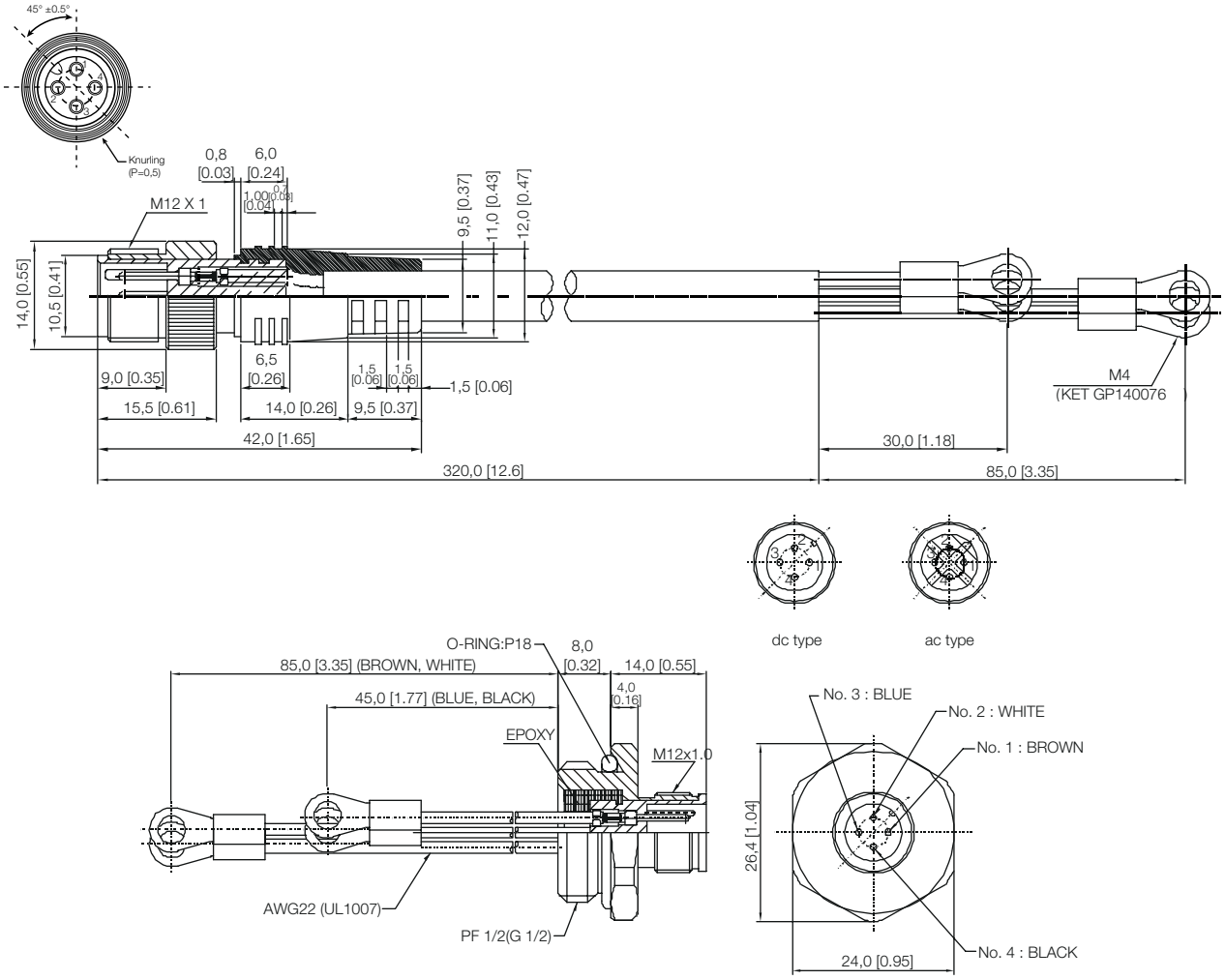

NOTE: Receptacle required for using cables. Order part number ZLC-4DRM-85.

SEAL CONNECTOR

Product Nomenclature

LSC — 09 C — PF T

Connector	Wire Size	Material of Body/Cap	Conduit Size	Type
LSC Series Connector for use with SZL-WL Series Limit Switches	**06** 4.0 to 6.0 diameter	**C** Brass	**PF** PF 1/2	Standard
	09 6.0 to 9.0 diameter	**A** Aluminum		**N** Corrosion-protection
	12 9.0 to 12.5 diameter	**Z** Zinc die-cast		
		M Plastic		
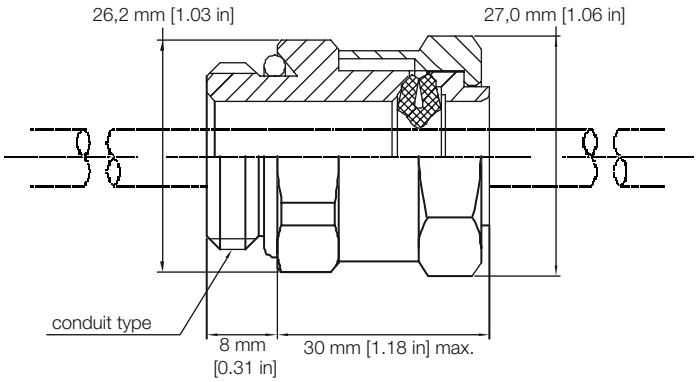
Figure 25. LSC-09C-PFT