SICK.COM



DATA SHEET

FUM-H025F1GE80000

DOSIC
Flow sensors

SICK Sensor Intelligence



Illustration may differ

FLOW SENSORS

FUM-H025F1GE80000

ORDERING INFORMATION

Type	part no.
FUM-H025F1GE80000	1082033

Further device versions and accessories at www.sick.com/DOSIC

DETAILED TECHNICAL DATA

FEATURES

Measurement principle	Ultrasonic sensor
Medium	Conductive and non-conductive liquids
Nominal width measuring tube	DN 25
Process temperature	–20 °C ... +95 °C, up to 143°C for 60 minutes for SIP process (temperature measurement only) [1]
Process pressure	–0.5 bar ... 16 bar
Communication interface	IO-Link, IO-Link V1.1
Temperature measurement	✓

[1] 0 °C ... +95 °C with flow and temperature measurement; up to 143°C only with temperature measurement.

PERFORMANCE

Minimum flow	1.5 l/min
Inlet zone	5 x DN (12.5 cm)
Output zone	3 x DN (7.5 cm)
Conductivity	No limitation
Measurement accuracy	± 1 % From measured value [1]
Repeatability	0.5 %
Resolution	10 ml/min
Response time	12 ms

[1] Under the following reference conditions: water 26 °C ± 2 K, 2.5 bar ± 0.5 bar, standard settings, DN15: 8 l/min ... 80 l/min, DN25: 25 l/min ... 250 l/min.

ELECTRONICS

Supply voltage	12 V DC ... 30 V DC [1]
Power consumption	< 3 W without output load
Switch-on time	≤ 5 s
Protection class	✓
Connection type	M12 round connector x 1, 8-pin
Output signal	2 x analog output: 4 mA ... 20 mA, 2 x digital input or output (configurable) [2] [3]
Output load	4 mA ... 20 mA, 500 ohms when Uv > 15 V, 350 ohms when Uv > 12 V
Lower signal level	3.5 mA ... 3.8 mA
Upper signal level	20.5 mA ... 21.5 mA
Digital output	≤ 100 mA
Impulse output signal	50 µs ... 2 s
Impuls/frequency output	0 kHz ... 10 kHz
Inductive load	< 1 H
Capacitive load	< 100 nF < 2.5 nF (IO-Link)
Enclosure rating	IP67 (according to DIN EN 60529) IP69 (according to DIN EN 60529)
EMC	EN 61326-1, EN 61326-2-3
Limit digital inputs	HIGH state voltage > 16.0 V, LOW state voltage < 4.0 V
MTTF	> 63 years

[1] All connections are reverse polarity protected. Q_A and Q_B are short-circuit protected. Q1 and Q2 are short-circuit protected.

[2] Digital output configuration: PNP/NPN/push-pull/open collector.

[3] Selectable analog output: flow/temperature.

MECHANICS

Process connection	G 1 ¼
Wetted parts	Stainless steel 1.4404 (Ra ≤ 0,8 µm)
Housing material	Stainless steel 1,4305
Housing design	With viewing window made from PMMA (acrylic glass)
Weight	Approx. 3 kg

AMBIENT DATA

Ambient operating temperature	0 °C ... +60 °C
Ambient temperature, storage	–40 °C ... +80 °C

DIMENSIONAL DRAWING PROCESS CONNECTION

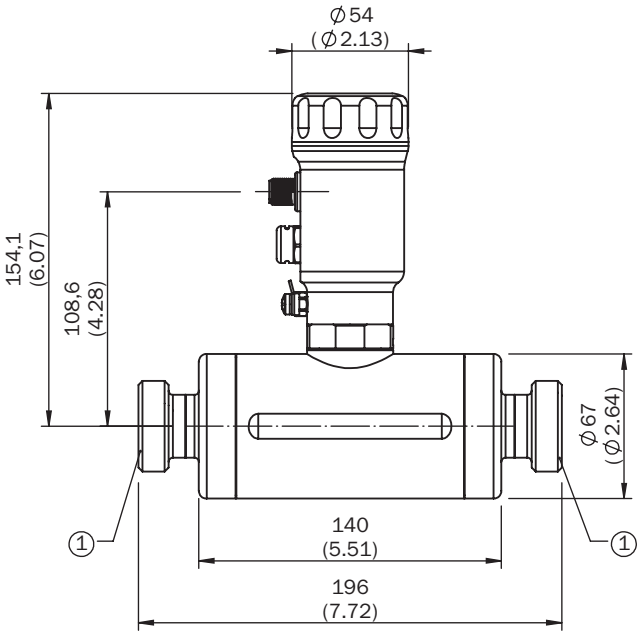

Dimensions in mm (inch)

CONNECTION TYPE

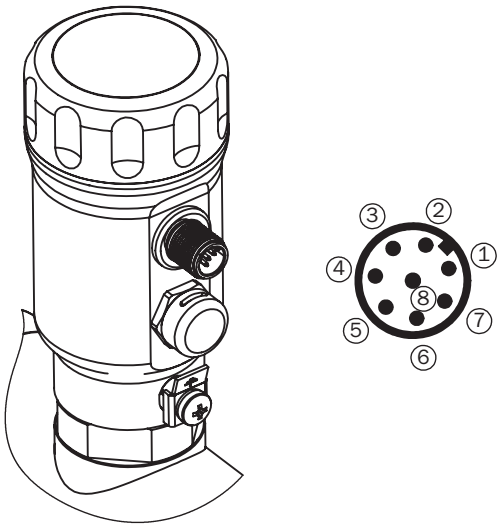

① L^+: Supply voltage
② Q2: Switching output/input 2, PNP/NPN/push-pull/open collector/frequency/pulse output
③ M: Ground, reference potential for current output
④ C/Q1: Switching output/input 1, PNP/NPN/push-pull/open collector/IO-Link communication
⑤ No function
⑥ No function
⑦ Q_A: analog current output 4 mA ... 20 mA
⑧ Q_B: analog current output 4 mA ... 20 mA

Further information as well as suitable accessories, example applications and downloads such as CAD dimensional models, operating instructions and software can be found at www.sick.com/1082033

SICK AG
WALDKIRCH
GERMANY
SICK.COM

SICK AT A GLANCE

SICK is a leading global technology company for intelligent sensors and integrated solutions in industrial automation. Our technologies set benchmarks, making your industrial processes more efficient, safer and more sustainable – both in logistics and manufacturing operations.

SICK combines sensor intelligence with industry expertise and certified consulting services. We provide the ideal foundation for scalable as well as tailor-made automation solutions and create added value along the entire value chain. Our close partnerships with our customers are more than just a promise: Together, we optimize productivity, improve quality, protect health and safety, and help build a sustainable future. All with empathy and trust.

Since 1946, we have been developing innovative technologies with passion and a pioneering spirit. With a global network in around 40 countries, SICK has a global presence and is always close by. The company's headquarters are located in Waldkirch near Freiburg, Germany. Our customers benefit from our understanding of both local and global requirements, which enables us to deliver tailor-made solutions

SICK

Sensor Intelligence