FT 25-RGB2-GSL-KL4

Ordering information

Designation for ordering	FT 25-RGB2-GSL-KL4
Part number	**607-21039**
Order text	RGB contrast sensor, 12 +/- 3 mm, 10 kHz, push-pull, teach-in, pigtail 150 mm with plug M12 4-pin, IP 67 & IP 69, IO-Link
Components supplied	Operating manual, Sensor

Optical data	
Scanning distance *[mm]*	12
Scanning distance tolerance *[mm]*	-3.0 ... 3.0
Light source	LED
Light color	Red
Light type	Green
Light type	Blue
Wavelength *[nm]*	633
Wavelength 2 *[nm]*	525
Wavelength 3 *[nm]*	460
Light spot size *[mm]*	1 x 4
Switching frequency ≤ *[Hz]*	≤ 10,000
Explanation of switching frequency	f = 1 / (T x Nyq x 2)

Functions	
Display, LED yellow	Switching output indicator
Display, LED green	Operating voltage indicator
Setting options	LO / DO via the teach-in button and control input Button lock via control input Multiple setting options via IO-Link
Sensitivity setting	Via teach-in button, control input and IO-Link
Teach-in modes	Mode 1: during running process Mode 2: when process at standstill

IO-Link	
Data storage	Yes
Communication mode	COM 2
Length of the process data *[Bit]*	16
Min. cycle time *[ms]*	2.3
SIO mode	is supported
IO-Link specification	1.1

The information contained in this data sheet has been prepared with the utmost care. We reserve the right to make technical changes.

ПРОМЭЛЕКТРОНИКА / sales@prom-elec.com

Electrical data

Operating voltage UB *[V DC]*	10 ... 30
Explanation of operating voltage UB	max. 10% residual ripple, within UB, ~ 50 Hz|100 Hz
No-load current *[mA]*	≤ 30
Output current *[mA]*	≤ 100
Readiness delay *[ms]*	≤ 300
Reverse polarity protection	Yes
Short circuit protection	Yes
Response time Q *[µs]*	≤ 60
Control input	+UB = Teach-in - UB = button locked open = normal operation
Protection class	2
Jitter *[µs]*	25.0
Output function	LO/DO
Switching output Q	Push-pull
Number of outputs	1

Mechanical data

Height *[mm]*	34.0
Length *[mm]*	20.0
Width *[mm]*	12.0
Weight *[g]*	~ 20
Front panel material	PMMA
Housing material	ABS
Ambient temperature: operation *[°C]*	-20 ... 55
Explanation of operation at ambient air temperature	UL: -20|+50
Ambient temperature: storage *[°C]*	-20 ... 80
Protection class	IP 67, IP 69
Explanation of protection class	with IP 67 / IP 69 plug connected
Vibration and shock resistance	EN 60947-5-2
Connection name	Pigtail, plug M12x1, 4-wire, 150 mm, IO-Link

Technical drawings

Dimensional drawing

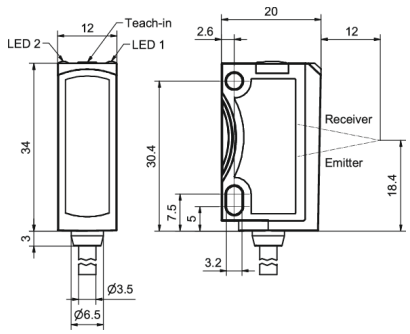

Signal history	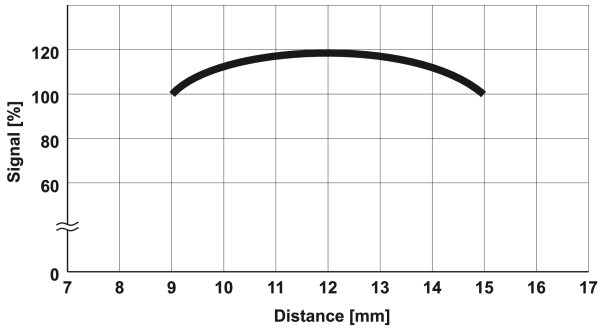
Connections	**4-pin, IO-Link** 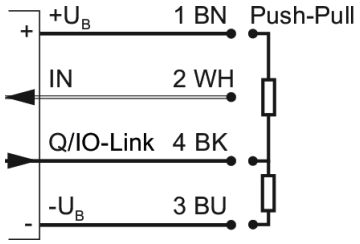

Product link

https://www.sensopart.com/en/products/details/607-21039