FT 25-RGB1-GS-KL4

Ordering information

Designation for ordering	FT 25-RGB1-GS-KL4
Part number	**607-21010**
Order text	RGB contrast sensor, 12 +/- 3mm, 25 kHz, Push Pull, teach in, pigtail 150mm with plug M12 4-pins, IP67 & IP69. For this product a new version is available: 607-21036 FT 25-RGB1-GSL-KL4. That offers additional functionality via IO-Link. More product information you can find on www.sensopart.com
Components supplied	Operating manual, Sensor

Optical data	
Scanning distance *[mm]*	12
Scanning distance tolerance *[mm]*	-3.0 ... 3.0
Light source	LED
Light color	Red
Light type	Green
Light type	Blue
Wavelength *[nm]*	633
Wavelength 2 *[nm]*	460
Wavelength 3 *[nm]*	525
Light spot size *[mm]*	1 x 4
Switching frequency ≤ *[Hz]*	≤ 25,000
Explanation of switching frequency	f = 1 / (T x Nyq x 2)

Functions	
Display, LED yellow	Switching output indicator
Display, LED green	Operating voltage indicator
Setting options	LO / DO via the teach-in button and control input Button lock via control input
Sensitivity setting	via teach-in button and control input
Teach-in modes	Mode 1: During running process Mode 2: When process at standstill

The information contained in this data sheet has been prepared with the utmost care. We reserve the right to make technical changes.

ПРОМЭЛЕКТРОНИКА / sales@prom-elec.com

Electrical data

Operating voltage UB *[V DC]*	10 ... 30
Explanation of operating voltage UB	max. 10% residual ripple, within UB, ~ 50 Hz / 100 Hz
No-load current *[mA]*	≤ 30
Output current *[mA]*	≤ 100
Readiness delay *[ms]*	≤ 300
Reverse polarity protection	Yes
Short circuit protection	Yes
Response time Q *[µs]*	≤ 30
Control input	+UB = Teach-in - UB = Button locked Open = Normal operation
Protection class	2
Jitter *[µs]*	10.0
Output function	LO/DO
Switching output Q	Push-pull
Number of outputs	1

Mechanical data

Height *[mm]*	34.0
Length *[mm]*	20.0
Width *[mm]*	12.0
Weight *[g]*	~ 20
Front panel material	PMMA
Housing material	ABS
Ambient temperature: operation *[°C]*	-20 ... 55
Explanation of operation at ambient air temperature	UL: -20|+50
Ambient temperature: storage *[°C]*	-20 ... 80
Protection class	IP 67, IP 69
Explanation of protection class	with IP 67 / IP 69 plug connected
Vibration and shock resistance	EN 60947-5-2
Connection name	Pigtail, plug M12, 4-wire, 150 mm

Technical drawings

Dimensional drawing

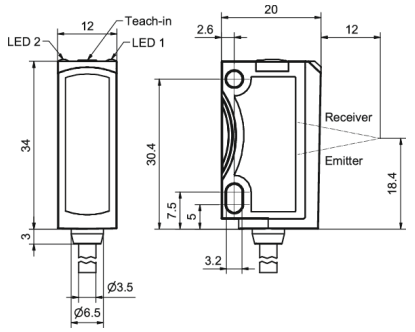

153-00996

Signal history

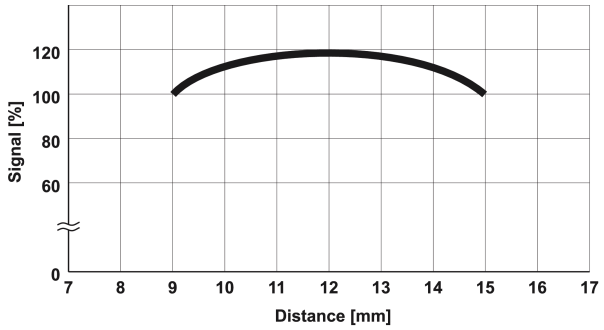

155-01648

Connections

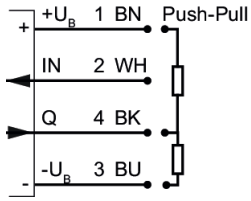

154-00527

Product link

https://www.sensopart.com/en/products/details/607-21010

The information contained in this data sheet has been prepared with the utmost care. We reserve the right to make technical changes.