FT 25-C1-GSL-M4M

Ordering information

Designation for ordering	FT 25-C1-GSL-M4M
Part number	**607-21040**
Order text	RGB color sensor, 12+/- 3mm, 10 kHz, push-pull, teach-in, metal connector M8 4-pin, IP 67 & IP 69, IO-Link
Components supplied	Operating manual, Sensor

Optical data	
Working range *[mm]*	9 ... 15
Scanning distance *[mm]*	12
Scanning distance tolerance *[mm]*	-3.0 ... 3.0
Explanation of scanning distance tolerance	Tolerance depending on teach-in: fine, medium, coarse; see operating instructions
Light source	LED
Light color	Red
Light type	Green
Light type	Blue
Wavelength *[nm]*	633
Wavelength 2 *[nm]*	525
Wavelength 3 *[nm]*	460
Light spot size *[mm]*	1 x 5
Switching frequency ≤ *[Hz]*	≤ 10,000
Explanation of switching frequency	f = 1 / (T x Nyq x 2)

Functions	
Display, LED yellow	Switching output indicator
Display, LED green	Operating voltage indicator
Setting options	NO/NC via teach-in button and control input, button lock via control input, multiple setting options via IO-Link
Sensitivity setting	Via teach-in button, control input and IO-Link
Default settings	NO
Number of savable colors	1

IO-Link	
Data storage	Yes
Communication mode	COM 2
Length of the process data *[Bit]*	32
Min. cycle time *[ms]*	2.3
SIO mode	is supported
IO-Link specification	1.1

The information contained in this data sheet has been prepared with the utmost care. We reserve the right to make technical changes.

ПРОМЭЛЕКТРОНИКА / sales@prom-elec.com

Electrical data

Operating voltage UB *[V DC]*	10 ... 30
Explanation of operating voltage UB	max. 10% residual ripple, within UB ~ 50 Hz / 100 Hz
No-load current *[mA]*	≤ 30
Output current *[mA]*	≤ 100
Readiness delay *[ms]*	≤ 300
Reverse polarity protection	Yes
Short circuit protection	Yes
Response time Q *[µs]*	≤ 50
Control input	+ UB = Teach-in - UB = Button locked Open = Normal operation
Protection class	2
Jitter *[µs]*	20.0
Output function	N.O./N.C.
Switching output Q	Push-pull

Mechanical data

Height *[mm]*	34.0
Length *[mm]*	20.0
Width *[mm]*	12.0
Weight *[g]*	~ 10
Front panel material	PMMA
Housing material	ABS
Ambient temperature: operation *[°C]*	-20 ... 55
Explanation of operation at ambient air temperature	UL: -20…+50 °C
Ambient temperature: storage *[°C]*	-20 ... 80
Protection class	IP 67, IP 69
Explanation of protection class	With IP67 / IP69 plug connected
Vibration and shock resistance	EN 60947-5-2
Connection name	Metal plug M8, 4-pin

Technical drawings

Dimensional drawing

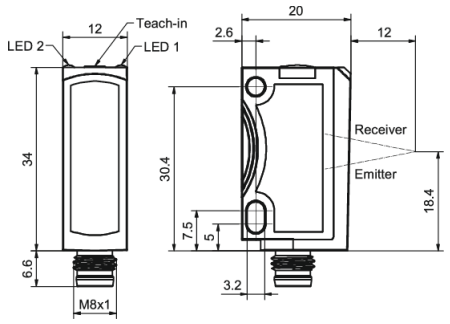

Assembly

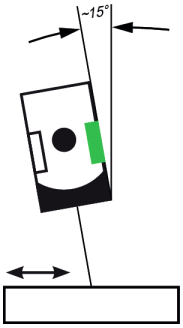

155-01726

Signal history

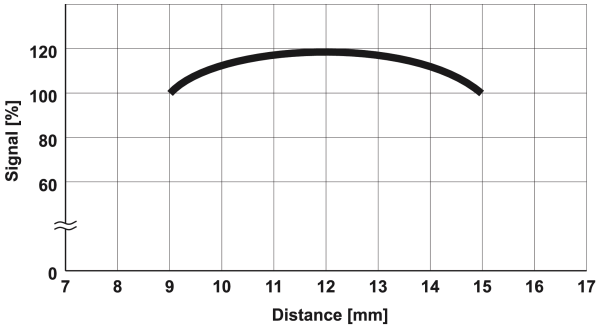

155-01648

Connections

4-pin, IO-Link

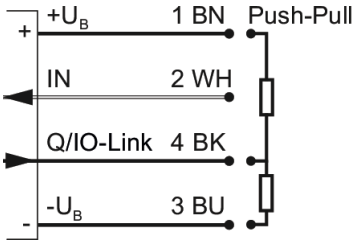

154-00580

Product link

https://www.sensopart.com/en/products/details/607-21040