resideo

# VK41..V(B)(E)/VK81..V(B)(E) SERIES

## GAS CONTROLS WITH INTEGRATED 1:1 GAS/AIR REGULATOR FOR COMBINED VALVE AND IGNITION SYSTEM

**INSTRUCTION SHEET**

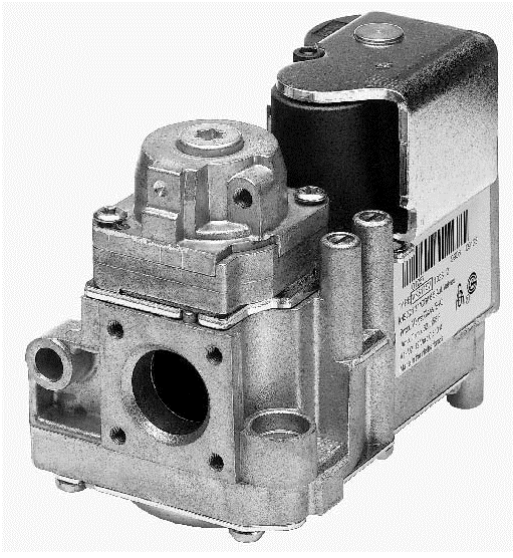

## APPLICATION

The VK41..V(B)(E)/VK81..V(B)(E) series gas controls with 1:1 gas/air regulator have been developed for application in domestic appliances with premix burners and automatic ignition.

For this system, the VK41..V series gas controls have been designed to have the S4565 series ignition control attached directly onto the valve.

The combined system then provides programmed safe light up, flame supervision and regulation of gas flow to the main burner of the appliance.

The VK41..V(B)(E)/VK81..V(B)(E) series can as well be used as stand alone in direct burner applications. The plug (order number 45.900.441-) with integrated rectifier circuit then has to be used.

The VK41..V(B)(E)/VK81..V(B)(E) series are used in a system context in conjunction with fan control and a direct spark ignition (DSI) control.

The VK41..V(B)(E)/VK81..V(B)(E) series are approved in accordance with european standards.

## DESCRIPTION

VK41..V(B)(E)/VK81..V(B)(E) gas controls perform all the functions required to safely regulate gas flow to the main burner of domestic central heating equipment, warm air furnaces, back boilers and water heaters.

VK41..V(B)(E)/VK81..V(B)(E) gas controls hold a first electric on/off direct operator for opening the safety valve of class B according to EN161 and a second electric on/off servo operator of class B or C to EN 161.

The pressure regulator is in accordance with class B requirement of EN 88.

VK41..V(E)/VK81..V(E) gas controls can handle the three gas families, manufactured gas, natural gas and LP gas.

VK41..VB/VK81..VB gas controls can handle second family gas only.

## SPECIFICATIONS

**Models**

VK41.0 series: line voltage gas control **with** pilot burner connection, two automatic shut off valves and pilot burner connection for direct spark ignition (DSI) or hot surface ignition (HSI) applications,

VK41.5 series: line voltage gas control **without** pilot burner connection, two automatic shut off valves for direct spark ignition (DSI) or hot surface ignition (HSI) applications,

VK81.0 series: low voltage gas control **with** pilot burner connection, two automatic shut off valves for direct spark ignition (DSI) or hot surface ignition (HSI) applications,

VK81.5 series: low voltage gas control **without** pilot burner connection, two automatic shut off valves for direct spark ignition (DSI) or hot surface ignition (HSI) applications,

**Suffix letter**

V: fast opening, with integrated 1 : 1 gas/air regulation

VB: fast opening, with integrated 1 : 1 gas/air regulation High capacity

VE: fast opening, with integrated 1:1 gas/air regulation and integrated throttle in end outlet

**Main gas connection**

See table 1, table 2, table 3 and table 4.

$^3/_8$" and $^1/_2$" straight or elbow flanges are according to the torsion and bending stress of EN 126 group 2

Connections with G $^1/_2$" or G $^3/_4$" external thread fitted with nuts according to ISO 228-1 in combination with applicable sealing(s) withstand the torsion and bending stress of EN 126 group 1

Side outlet (optional) and end outlet (flanged version) can be fitted direct to a burner manifold.

End outlet or side outlet Quick connection for Mini-Venturi or Premix Engine Venturi

Subject to change without notice. All rights reserved



ПРОМЭЛЕКТРОНИКА / sales@prom-elec.com

**Pilot gas connection (where applicable)**

Standard at end outlet: M8 x 1 for 4 mm outer diameter tubing.

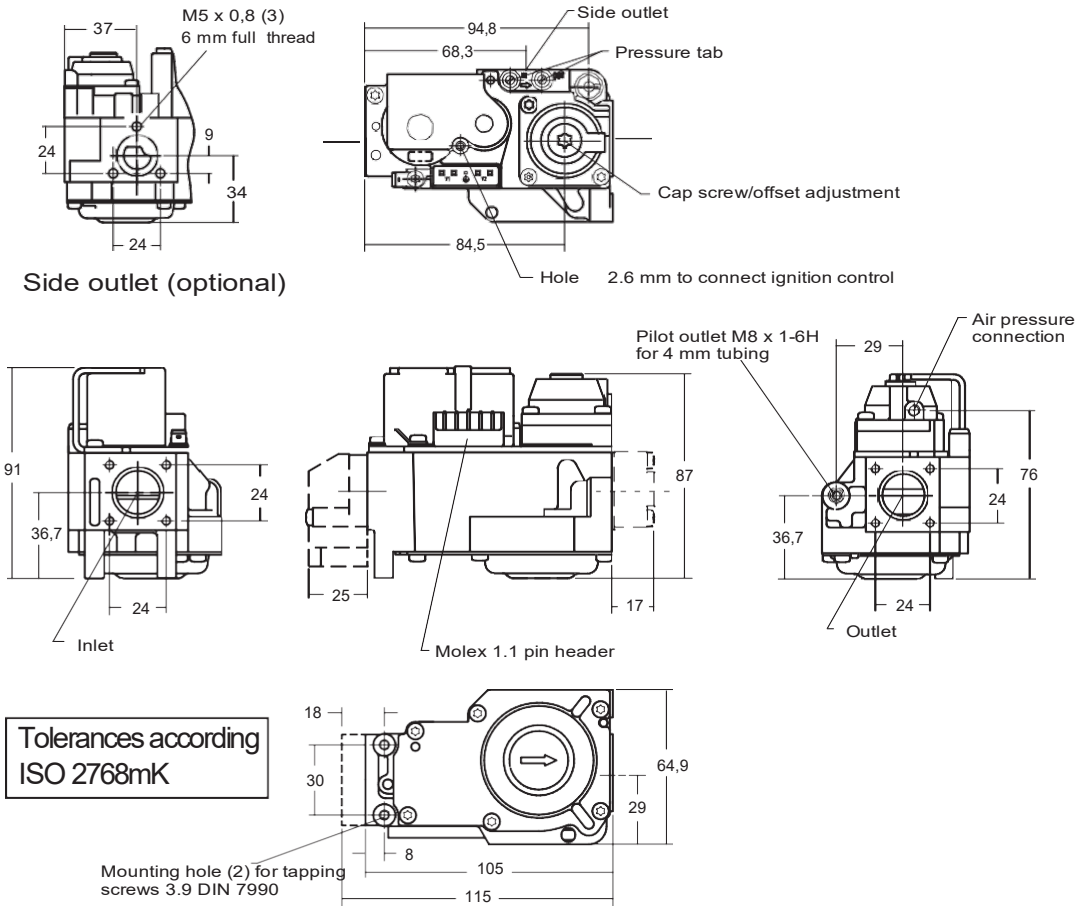


**Fig. 1. Dimensional drawing standard version**

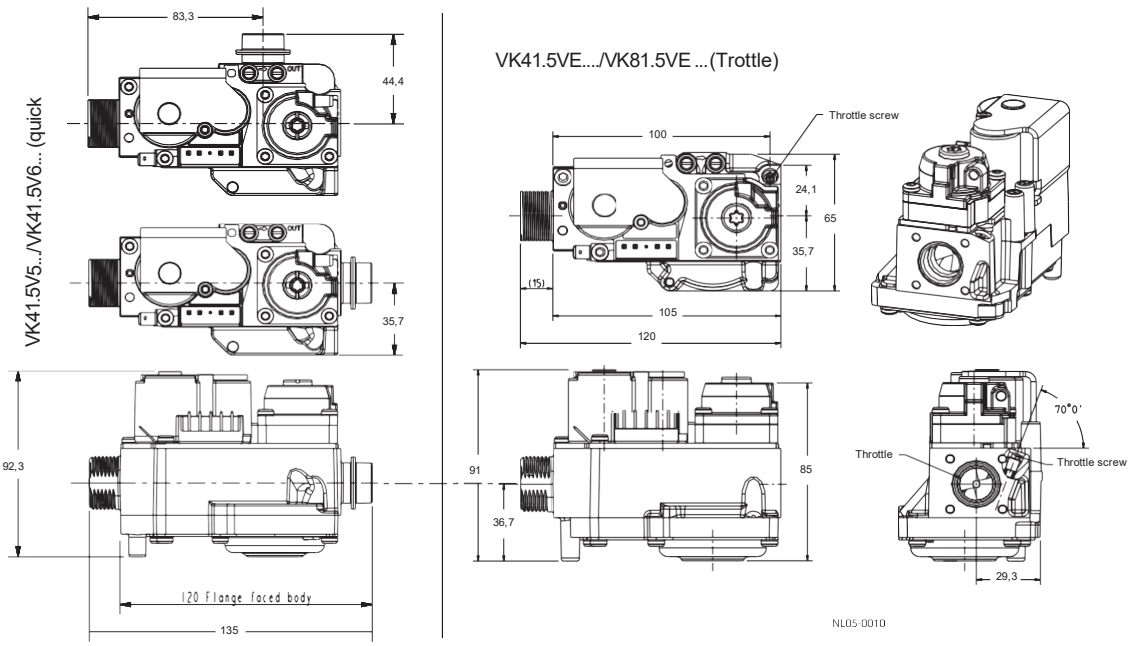


**Fig. 2. Dimensional drawing Quick connect and Throttle versions**

**Ambient temperature**
-15 ... 70°C

**Dimensions**
See fig. 1 and 2.

**Pressure regulationfunction**
Class B according to EN 88

**Air pressure connection**
Servo pressure regulator has an M5 threaded hole to make connection between regulator and appliance.

**Outlet pressure**
Outlet pressure is pressure drop across the main burner orifice.

**Outlet pressure range**
0.5 ... 20 mbar

**Maximum inlet pressure**
60 mbar

**Minimum regulation capacity**

**- for VK41xxV/VK81xxV:**
0.5 $m^3$/h air at ⊗p=0,5 mbar across main burner orifice at 30 mbar operating pressure maximum
0.7 $m^3$/h air at ⊗p=0,5 mbar across main burner orifice at 60 mbar operating pressure maximum

**- for VK41xxVB/VK81xxVB:**
1.0 $m^3$/h air at ⊗p=0,5 mbar across main burner orifice at 60 mbar operating pressure maximum

**Minimum operating gas pressure**
15 mbar

**Maximum operating gas pressure**
60 mbar : VK411x / VK811x (Class B+C)
30 mbar : VK412x / VK812x (Class B+B)
30 mbar : VK41xxVB / VK81xxVB (Class B+C)
The $P_{max}$ 60 mbar indication on the housing is the maximum inlet pressure at which the gas control functions safely.

**Maximum air pressure**
8 mbar without outlet gas pressure (before ignition)
20 mbar with outlet gas pressure present (after ignition)

**Offset range**
-0.4 mbar ... + 0.2 mbar (with coils sidewards)

-0.24 mbar ... + 0.36 mbar (with coils on top)

| Inlet | End outlet | Side outlet | Body length (mm) |
|---|---|---|---|
| Flanged | Flanged | -- | 105 |
| Flanged | -- | Flanged | 105 |
| Internal $^3/_8$" ISO 7-1 | -- | Flanged | 115 |
| Internal $^1/_2$" ISO 7-1 | -- | Flanged | 115 |
| Internal $^1/_2$" ISO 7-1 | Internal $^1/_2$" ISO 7-1 | -- | 115 |

**Table 1. Standard valve connection**

| Inlet | End outlet | Side outlet | Body length (mm) |
|---|---|---|---|
| G $^1/_2$" | G $^1/_2$" | -- | 135 |
| G $^1/_2$" | Flanged | -- | 120 |
| G $^3/_4$" | G $^3/_4$" | -- | 135 |
| G $^3/_4$" | Flanged | -- | 120 |
| G $^3/_4$" | -- | Flanged | 120 |
| G $^3/_4$" | Internal $1^1/_2$" ISO 7-1 | -- | 120 |
| G $^1/_2$" | -- | Flanged | 120 |
| Flanged | G $^1/_2$" | -- | 120 |
| Flanged | G $^3/_4$" | -- | 120 |

**Table 2. External thread valve connection**

| Inlet | End outlet | Side outlet | Body length (mm) |
|---|---|---|---|
| Flanged | Quick connect | - | 120 |
| Flanged | - | Quick connect | 105 |
| G $^3/_4$" | Quick connect | - | 135 |
| G $^3/_4$" | - | Quick connect | 120 |

**Table 3. Quick connect valve connection**

| Inlet | End outlet | Side outlet | Body length (mm) |
|---|---|---|---|
| Flanged | Flanged | -- | 105 |
| G $^1/_2$" | Flanged | -- | 120 |
| G $^3/_4$" | Flanged | -- | 120 |

**Table 4. Throttle valve (VK....VE only) connection**

**Capacity (⊗p = 5 mbar, 1013 mbar and 15°C)**
VK4110V/VK8110V: 3.2 $m^3/_h$ air
VK4115V/VK8115V: 3.4 $m^3/_h$ air
VK4125V/VK8125V: 2.2 $m^3/_h$ air
VK4115VB/VK8115VB: 4.4 $m^3/_h$ air
VK4115VE/VK8115VE: 0,34 ... 3,2 $m^3/_h$ air

NOTE: Versions with side outlet connection only have a 0.2 $m^3/_h$ air lower capacity.
Versions with external thread connection have a 0.3 $m^3/_h$ air lower capacity.

Capacity curves are available on request.

**Valve classification**

| Type | Class | |
|---|---|---|
| | 1st valve | 2nd valve |
| VK4110/VK4115<br>VK8110/VK8115 | Class B | Class C |
| VK4120/VK4125<br>VK8120/VK8125 | Class B | Class B |

**Timing**
Closing time: ≤ 1 s
Opening time: see table

| Model | Time till $P_o$ >= 100 $P_a$ |
|---|---|
| VK4115V/VK8115V | < 1 s |
| VK4115VB/VK8115VB | < 1.5 s |
| VK4125V/VK8125V | < 1.5 s |

**Mounting holes**
Two mounting holes at the bottom for thread forming screws. The four holes at inlet and outlet for mounting a flange on the gas control are provided with M4 thread with min. 6 mm full thread.
In case of side outlet the three holes for mounting the flange are provided with M5 thread with a minimum of 6 mm full thread.

## Electrical data

| Coil indication | Supply voltage |
|---|---|
| 220/240 Vrac | 220 V, 50/60 Hz using rectifier<br>240 V, 50/60 Hz using rectifier |
| 110 Vrac | 110 V, 50/60 Hz using rectifier |
| 24 Vrac | 24 V, 50/60 Hz using rectifier |

**Electrical connection**
Molex 1.1 square pin header
The 24 V and 220/240 V versions gas controls can be connected to any standard **DBI** control with a 24 Vac, or 220/240 Vac output by using a rectifier plug 45.900.441-

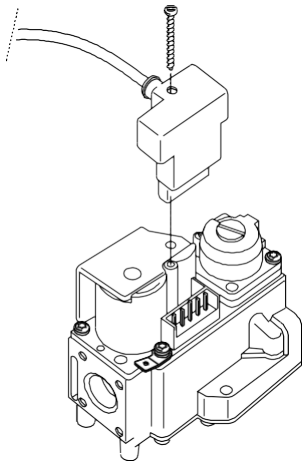

**Fig. 3. Mounting of rectifier plug**

## *IMPORTANT*

*Warranty claims are not accepted if not the specified plug/rectifier circuit is used.*

**Electical protection of gas control with rectifier plug**
IP 40

**Mounting of rectifier plug**
See fig. 2.

**Mounting screw of rectifier plug**
Torque: 40 Ncm max.

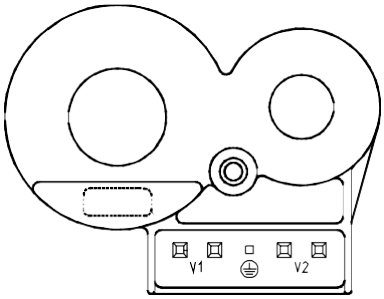


**Fig. 4. Coil connection**

**Current and power consumption at nominal voltage**

| Voltage | Current (mA) | Power consumption (W) |
|---|---|---|
| 220 V, 50/60 Hz | 48 | 9.4 |
| 240 V, 50/60 Hz | 52 | 11.2 |
| 110 V, 50/60 Hz | 89 | 8.8 |
| 24 V, 50/60 Hz | 424 | 9.2 |

# INSTALLATION

## *IMPORTANT*

*Take care that installer is a trained experienced service person.*
*Turn off gas supply before starting installation.*
*Disconnect power supply to prevent electrical shock and/or equipment damage.*
*Do not remove seals over inlet and outlet until the device is ready to be installed.*
*If M5 air pressure connection is not to be used, it is recommanded to push a dust cap into the hole.*

**Mounting position**

The gas control can be mounted 0 to 90° in any direction from the upright position, i.e. from the position when electric coils are on top.

## Main gas connection

## *IMPORTANT*

*During tightening the main gas connection assure the gas control is secured against rotation by using the right spanner in order to ensure right mounting position and avoid excessive forces (see figure 5).*

*Ensure the gas flows in the same direction as the arrow on the bottom of the gas control.*

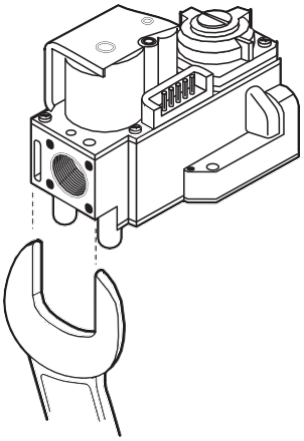

**Fig. 5.**

### Gas controls with internal thread

- Take care that dirt cannot enter the gas control during handling.
- Use a sound taper fitting with thread according to ISO 7-1 or a piece of new, properly reamed pipe, free from swarf.
- Do not thread or tighten the pipe or pipe fitting too far (see table below). Otherwise distortion and malfunction could result.

| Pipe size (inch) | Max. length of pipe thread (mm) |
|---|---|
| $^3/_8$ | 14 |
| $^1/_2$ | 18.6 |

- Apply a moderate amount of good quality thread compound to the pipe or fitting only, leaving the two end threads bare.If permitted by local safety regulations PTFE tape may be used as an alternative.

### Gas controls for flange connection

- Insert ”O”-ring in the groove of each flange. If necessary grease ”O”-ring slightly to keep it in place.
- Mount gas control between flanges using the four screws for each flange.

## Gas controls with external thread connection

## ⚠ WARNING

Fastening torque flat sealing ring only applicable for type Klingersil C4324

**With $^1/_2$” nut and flat sealing ring for pipe 14mm (see fig 5.)**
Nut: drawing:.....45.006.583-005
Flat sealing ring size: ∅18 x ∅10 x 1.5 mm:
drawing.....45.006.582-002
Fastening torque: maximum 40 Nm
minimum 25 Nm
Pipe end construction: see fig.: 8.

**With $^1/_2$” nut and flat sealing ring for pipe 15mm (see fig 5.)**
Nut: drawing:.....45.006.583-004
Flat sealing ring size: ∅18 x ∅10 x 1.5 mm
drawing.....45.006.582-002
Fastening torque: maximum 40 Nm
minimum 25 Nm
Pipe end construction: see fig.: 9.

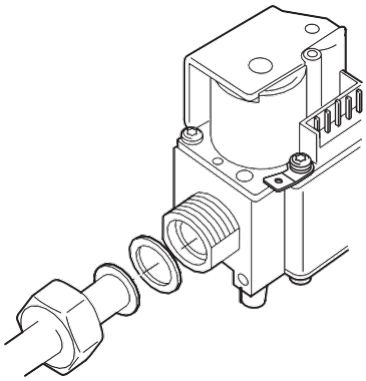

**Fig. 6. External thread connection with nut and flat sealing ring**

**With $^3/_4$” nut and olive (see fig. 6.)**
Pipe diameter: 15 mm
Nut: drawing:.....45.006.583-003
Fastening torque: maximum 50 Nm
minimum 30 Nm
Pipe end construction: square off end of tubing and remove burrs

.

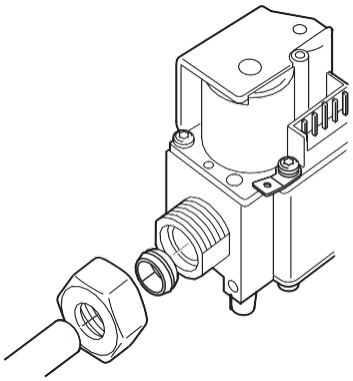

**Fig. 7. External thread connection with nut and olive**

Et **With $^3/_4$" nut and "O"-ring (see fig 7.)**
Pipe diameter: 15 mm
Nut: drawing:..... 45.006.583-003
"O"-ring size: ∅14.3 x ∅2.4 mm
drawing..... 45.001.528-048
Fastening torque: maximum 50 Nm
minimum 10 Nm
Pipe end construction: see fig.: 10.

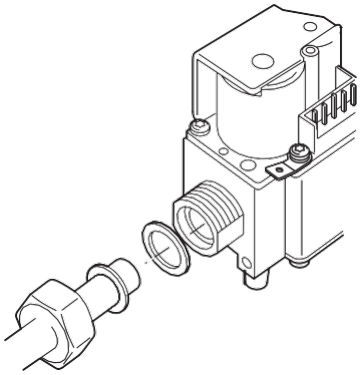

**Fig. 8. External thread connection with nut and "O"-ring**

0 **With $^3/_4$" nut and flat sealing ring for pipe 15 mm (see fig 5.)**
Nut: drawing:..... 45.006.583-003
Flat sealing ring size: ∅24 x ∅16 x 1.5 mm
drawing..... 45.006.582-001
Fastening torque: maximum 50 Nm
minimum 30 Nm
Pipe end construction: see fig.: 11.

0 **With $^3/_4$" nut and flat sealing ring for pipe 18 mm (see fig 5.)**
Nut: drawing:..... 45.006.583-002
Flat sealing ring size: ∅24 x ∅16 x 1.5 mm
drawing..... 45.006.582-001
Fastening torque: maximum 50 Nm
minimum 30 Nm
Pipe end construction: see fig.: 12.

**Fig. 9. Pipe (dia 14 mm) for flat sealing ring connection**

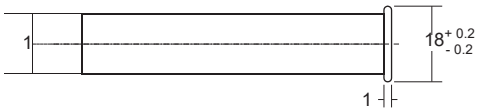


**Fig. 10. Pipe (dia 15 mm) for flat sealing ring connection**

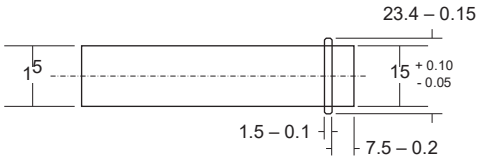


**Fig. 11. Pipe end for "O"-ring connection**

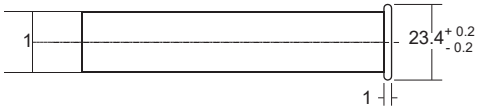


**Fig. 12. Pipe (dia 15 mm) for flat sealing ring connection**

**Fig. 13. Pipe (dia 18 mm) for flat sealing ring connection**

**Pilot gas connection at outlet side (if applicable)**

- Square off the end of tubing and remove burrs.
- Slip compression fitting over 4 mm tubing.
- Insert tubing into automatic gas control housing until it bottoms, slide fitting into place and turn finger tight.
- Use a wrench to tighten fitting about $1^1/_2$ turn beyond finger tight to shear of the olive. **Do not use jointing compound.**

Connect other end of tubing to pilot burner according to the manufacturer's instructions.

## ⚠ CAUTION

Do not bend tubing at gas control after compression fitting has been tightened, as this may result in gas leakage at the connection.

**Perform gas leak test**

## ⚠ WARNING

**FIRE OR EXPLOSION HAZARD CAN CAUSE PROPERTY DAMAGE, SEVERE INJURY OR DEATH**

Check for gas leaks with a rich soap and water solution any time work is done on a gas control.

**Gas leak test**

- Paint all pipe connections upstream of the gas control with with a rich soap and water solution.Bubbles indicate a gas leak.
- If a gas leak is detected, tighten the pipe connection.
- Stand clear while lighting the main burner to prevent injury caused from hidden gas leaks, which could cause flasback in the appliance vestibule. Light the main burner.
- With the main burner in operation, paint all pipe joints (including adapters) and gas control inlet and outlet with with a rich soap and water solutionan approved leak detection fluid.
- If another gas leak is detected, tighten adapter screws, joints and pipe connections.
- Replace the part if gas leak can not be stopped.

**CAUTION**

Keep soap and water solution away from electrical connections.

## Electrical connections

### *IMPORTANT*

*Disconnect power supply to prevent electrical shock and/or equipment damage.*
*Wiring must be in accordance with local regulations.*
*The appliance manufacturer's instructions should always be followed.*
*Before installing or replacing any control check that type number is correct for the application.*
*Ensure combustion chamber is free of gas before start up.*
*Conduct a thorough check out when installation is completed.*
*At the first start the ignition control can be in lock-out; depress reset button to free the ignition control.*

**Wiring**

- Use leadwire which can withstand 105 °C ambient.
- Use leadwire which is proven against moisture.
- Wiring between ignition control and spark sensing probe should have good quality insulation, suitable for the temperatures encountered.

**Fusing**

In order to prevent unsafe conditions at too high current, the ignition control has an integral non replaceable fuse.
This fuse will be blown long before the maximum 16 A external fuse switches off.

**Sparkgap**

Max. allowable spark gap 3.5 mm

**Supply voltage polarity**

**WARNING**

If ignition control seems to operate normally but does not detect flame, check for right polarity of power supply (line, neutral).

**Checking flame current**

- The minimum value should be in accordance with the specified value of the ignition control.
- To check flame current connect a DC micro-Ampèremeter between flame sensing wire and flame sensing rod.
- If flame current is insufficient check that flame sensing rod is fully enveloped by the flame and that burner is reliable grounded to ignition control.
- If there is no sufficient flame current due to phase-phase mains it is recommandable to use a AT7030A or AT7030B flame detection transformer. See also EN1R-9136 instruction sheet AT7030.

**WARNING**

Short μA meter during ignition to prevent damage of the μA meter in single rod application.

# ADJUSTMENTS

**WARNING**

Adjustments must be made by qualified persons only.

If the appliance manufacturer supplies checkout and/ or service and maintenance instructions carefully follow them.

If such instructions are not provided then use the procedure outlined below.

Adjustment can only be made with a special tool.

**Pressure tap**

The gas control is provided with a pressure tap of 9 mm O.D. at inlet and outlet side.

When checking the pressure undo the screw a half turn and slip tube over nipple.

**Ensure that screw is retightened after making test.**

**CAUTION**

To ensure a safe closing of the valves, it is essential that voltage over the terminals of electric operators is reduced to 0 Volt.

**Offset adjustment VK41..V(B)/VK81..V(B) (see fig. 1.)**

- Remove cap screw with a Torx T-40 screw driver or 5 mm hex key to expose offset adjustment screw.
- Check gas supply pressure to the appliance using a pressure gauge connected to the inlet pressure tap.
- Start fan and check air flow.
- Energize both electric operators in order to have gas input to burner and ignite boiler.
- Adjust $CO_2$ % at the desired value at low output with offset adjustment screw. Turn offset adjustment screw clockwise to increase $CO_2$ %.
- Operate boiler on high output. (Only modulating applications).
- Replace cap screw and tighten pressure taps.

**Offset adjustment VK4115VE/VK8115VE (see fig. 1 and fig. 2.)**

- Remove cap screw with a Torx T-40 screw driver or 5 mm hex key to expose offset adjustment screw.
- Check gas supply pressure to the appliance using a pressure gauge connected to the inlet pressure tap.
- Start fan and check air flow.
- Energize both electric operators in order to have gas input to burner and ignite boiler.
- Adjust CO2 % at the desired value at high output with throttle adjustment screw. Turn throttle adjustment screw clockwise to decrease CO2 %.
- Operate boiler on low output. (Only modulating applications).
- Adjust CO2 % at the desired value at low output with offset adjustment screw. Turn offset adjustment screw clockwise to increase CO2 %.
- Replace cap screw and tighten pressure taps.

**Throttle adjustment ..VE types.**

The position of the throttle screw can be found on page 2.
Apply a screwdriver to turn the screw.
To decrease the flow, turn screw clockwise.
To increase flow, turn screw counter-clockwise.

## ⚠ WARNING

Applied torque may not exceed 8 Ncm

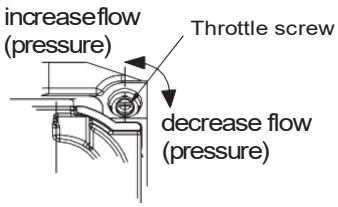


# CHECKOUT

- After any adjustment check pressure taps and gas connections with an approved leak detection fluid for gas leakage.
- After any adjustment set appliance in operation and observe a complete cycle to ensure that all burner components function correctly.

# MAINTENANCE AND SERVICE

Under normal circumstances no maintenance or service is required.

## ⚠ WARNING

Do not disassemble the gas control; it contains no replaceable components.

Attempted disassembly or repair may damage the gas control

Screws on the valve that have been sealed must never be removed.

resideo
www.resideo.com

Ademco 1 GmbH
Hardhofweg 40
74821 Mosbach
Phone: +49 1801 466 388
info.de@resideo.com
homecomfort.resideo.com

@2020 Resideo Technologies, Inc.
All rights reserved.
This product is manufactured by Resideo Technologies, Inc and its affiliates.