Honeywell

krom schroder

Pressure switches for air DL

TECHNICAL INFORMATION

- Monitoring of air, flue gas and other non-aggressive gases
- High switching point stability
- Switching point selection via hand wheel or adjusting screw
- Screw terminals or AMP plugs for electrical connections
- Flexible mounting options

ООО Промэлектроника
sales@prom-elec.com

EN
Edition 03.22
03250927

ПРОМЭЛЕКТРОНИКА / sales@prom-elec.com

Contents

Contents 2
1 Application 3
1.1 Application examples 4
1.2 Mounting examples 7
1.2.1 Simple mounting 7
1.2.2 Mounting without the need for tools or screws 7
1.2.3 Pressure-resistant mounting on mounting plate 8
1.2.4 Rugged, locked mounting 8
1.2.5 Mounting directly on the fan motor 9
1.3 Protection against pressure surges 10
1.4 Clearer handling in complex installations 10
1.5 Tube set with diverse possible applications 11
1.6 Easier diagnosis and maintenance 12
2 Certification 13
2.1 Zertifikate Download 13
2.2 EU certified 13
2.3 FM approved 13
2.4 UR recognized 13
2.5 UL listed 13
2.6 AGA approved 13
2.7 Eurasian Customs Union 13
2.8 Overview of product approvals 14
3 Function 15
3.1 Positive pressure measurement 15
3.2 Negative pressure measurement 15
3.3 Differential pressure measurement 15
3.4 Wiring 16
3.4.1 Rising pressure monitoring 16
3.4.2 Falling pressure monitoring 16
3.4.3 Connection diagram 16
3.5 DL in Zone 1 (21) and 2 (22) hazardous areas 17
3.5.1 Intrinsically safe circuit without monitoring for cable faults 17
3.5.2 Intrinsically safe circuit with monitoring for cable discontinuities 17
3.5.3 Intrinsically safe circuit with monitoring for cable faults and short-circuits 17
4 Selection 18
4.1 ProFi 18
4.2 Type code DL 3,3–40K 19
4.3 Type code DL 3,5–40KT 19
4.3.1 Electrical connection of DL 3,3–40K 19
4.4 Type code DL 2–35E 20
4.5 Type code DL 2–35ET 20
4.5.1 Electrical connection of DL 2–35E 20
4.5.2 Switching differential/switching point of DL 2E, DL 4E depending on installation position 20
4.6 Type code DL..A, DL..K, DL..AH, DL..AN, DL..KH, DL..KN 21
4.6.1 Electrical connection DL..A, DL..K 21
4.6.2 Test key on DL 5–150A 21
4.7 Type code DL 3–50AT, DL 3–50KT 22
4.8 Type code DL 1–50E 22
4.9 Type code DL 1–50ET 22
4.9.1 Electrical connection of DL 1–50E-1 22
4.9.2 Test tapping point on DL 5–50E-1P 22
5 Project planning information 23
5.1 Pressure switch with NBR diaphragm 23
5.2 Installation 23
5.2.1 Installation position 23

6 Accessories 25
6.1 Securing clip S 25
6.2 Securing clip D 25
6.3 L-angle bracket (A). 26
6.4 L-angle bracket (B). 26
6.5 Z-angle bracket 26
6.6 U-angle bracket. 27
6.7 Tube set. 27
6.8 Tube set 27
6.9 Pilot lamp set, red or blue 28
6.10 LED set, red/green. 28
6.11 Standard coupler plug set 28
6.12 Motor flange adapter 28
6.13 Damping nozzle. 28
6.14 Restrictor orifice. 29
6.15 Colour coordination set 29
6.16 External adjustment. 29
6.17 Pressure equalization element 29
6.18 DL 2–35E: grommet 30
6.19 DL 1–50E: grommet 30
7 Technical data. 31
7.1 Switching capacity 31
7.2 DL..K 31
7.2.1 Dimensions 32
7.2.2 Adjusting range. 32
7.3 DL..A, DL..K 33
7.3.1 Mechanical data 33
7.3.2 Electrical data 33
7.3.3 Dimensions. 33
7.3.4 Adjusting range. 35
7.4 DL 1–50E. 36
7.4.1 Dimensions 36
7.4.2 Adjusting range. 37
7.5 DL 2–35E. 38

7.5.1 Dimensions 38
7.5.2 Adjusting range. 39
8 Converting units. 40
9 Maintenance cycles. 41
For more information 42

1 Application

Pressure switches for air DL can be used as positive pressure switches, vacuum sensors or differential pressure switches for air, flue gas and other non-aggressive gases. They are not suitable for fuel gases. They monitor extremely low pressure differentials.

They trigger switch-on, switch-off or switch-over operations if a set switching point is reached. This switching point can be adjusted using a hand wheel or, if required, it can be fixed using an adjusting screw.

The diaphragm pressure switch with micro switch features particularly high contact reliability as low gas release components are used.

1.1 Application examples

DL 3,3–40K

DL 3K

DL 5–150A

DL..K is used in air-conditioning systems and kitchens due to its low adjusting range (from 20 Pa).

The pneumatic and electrical connections on DL 3,3–40K are accessible from the same side in order to ensure space-saving and easy-to-fit installation.

The switching point can be infinitely adjusted using the hand wheel.

Filter monitoring in kitchens

DL 1,5–3A, DL 3K

DL 5–150A, DL 5–150K

DL..A, DL..K are used for controlling butterfly valves for air and fire dampers in firing systems, and for fan monitoring.

DL 1,5A (-0.5 to +1.5 mbar) is used in laboratories and special applications in particular.

On DL..A, the positive pressure can be connected via a threaded connection (Rp 1/4) in the lower housing section.

DL 5–150A(K) with tube connection for negative pressure also has a threaded connection Rp 1/8 for negative pressure. To use the threaded connection, the tube connection must be unscrewed (minus).

The DL..AH/..HN, DL..KH/..KN can be supplied with manual reset function and is used, for example, for siphon monitoring on heating systems.

Fan monitoring in laboratories

DL 2–35E

DL 1–3E, DL 5–50E

Thanks to its slim design and low adjusting range (20 to 5000 Pa/0.08 to 20 "WC), the fields of application of DL..E include fan monitoring on condensing boiler units or on atmospheric wall-mounted units with flue gas fan.

On request, the air pressure switch DL..E can be supplied with only one NO contact, e.g. for a non-interchangeable connection to boiler control systems.

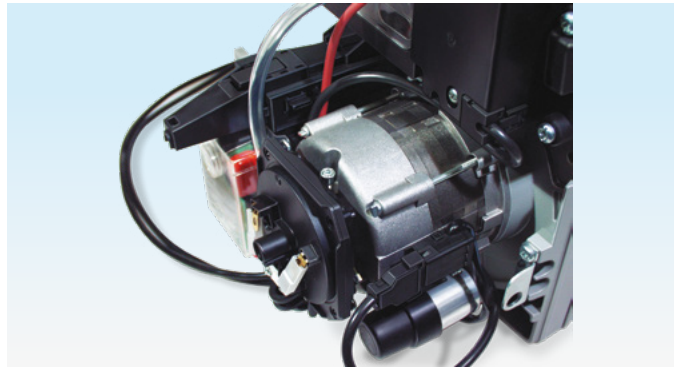

Pressure switch DL mounted on fan motor using a motor flange adapter

Pressure switch DL safeguards every flue gas route in the cascade

1.2 Mounting examples

1.2.1 Simple mounting

Simple front mounting. Mounting using two screws on the same side is sufficient and prevents the pressure switch being subjected to mechanical stress, see page 25 (5.2 Installation).

1.2.2 Mounting without the need for tools or screws

Securing clip S

The securing clip S allows the pressure switch to be easily installed and removed. Only two holes in the mounting plate or air duct are required for secure mounting. See page 27 (6.1 Securing clip S).

1.2.3 Pressure-resistant mounting on mounting plate

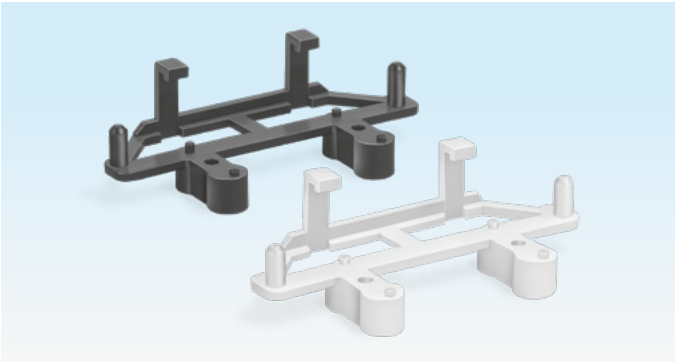

Securing clip D

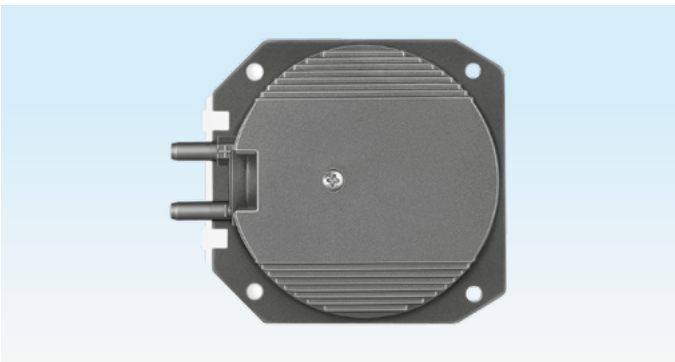

Attach the D clip to the mounting plate with the two screws supplied. Simply push the pressure switch onto the clip. The pressure switch can now be detached again at any time without the need for tools.

To reduce the amount of assembly work required, the pressure switch may, on request, be supplied with the clip already fitted. See page 27 (6.2 Securing clip D).

1.2.4 Rugged, locked mounting

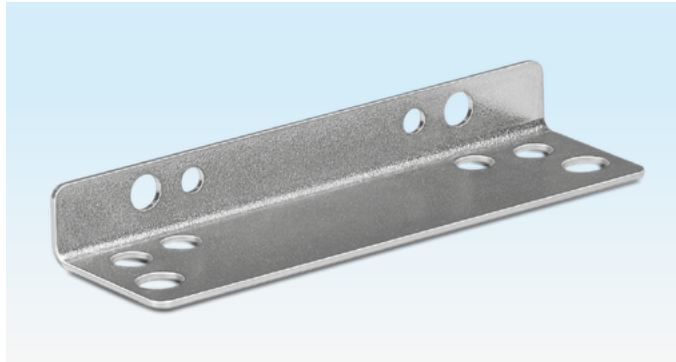

L-angle bracket

Mounting, see accessories, page 28 (6.3 L-angle bracket (A)).

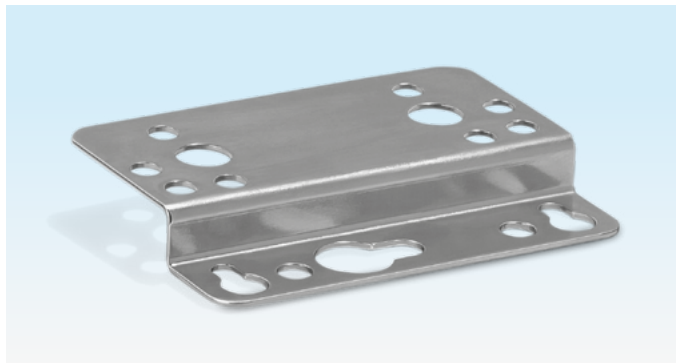

Z-angle bracket

Mounting, see accessories, page 28 (6.5 Z-angle bracket).

The L-shaped or Z-shaped angle bracket offers diverse mounting options, even with only one screw, and fast installation and removal. The angle bracket increases the distance between the pressure switch and warm boiler walls.

1.2.5 Mounting directly on the fan motor

Motor flange adapter

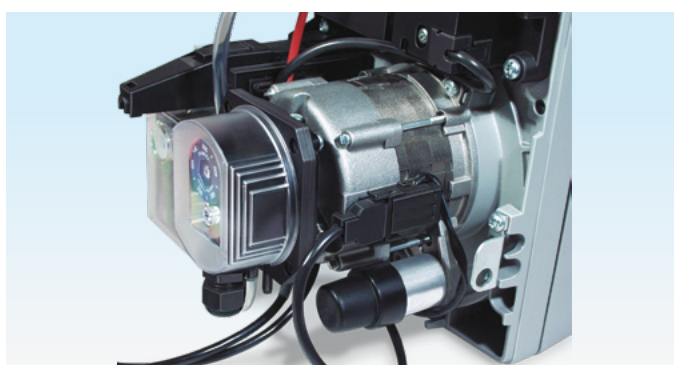

The pressure switch can be installed in a space-saving manner using the motor flange adapter. It is not necessary to drill holes for mounting. See accessories, page 30 (6.12 Motor flange adapter).

1.3 Protection against pressure surges

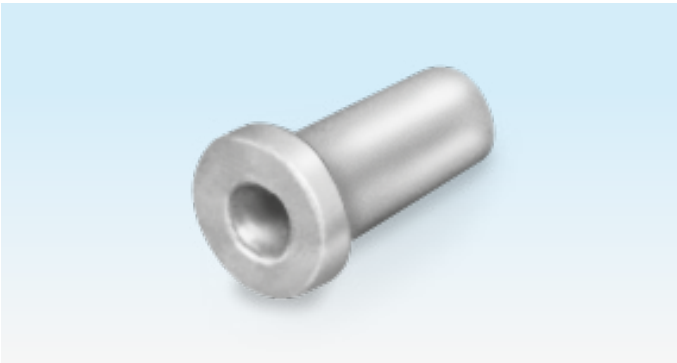

Damping nozzle

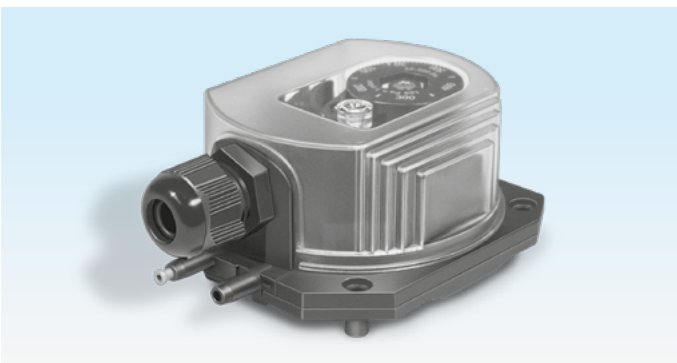

The damping nozzle attenuates pressure fluctuations and pressure surges. A brief pressure surge occurs in the air supply line when igniting a burner, for example. See accessories, page 30 (6.13 Damping nozzle).

1.4 Clearer handling in complex installations

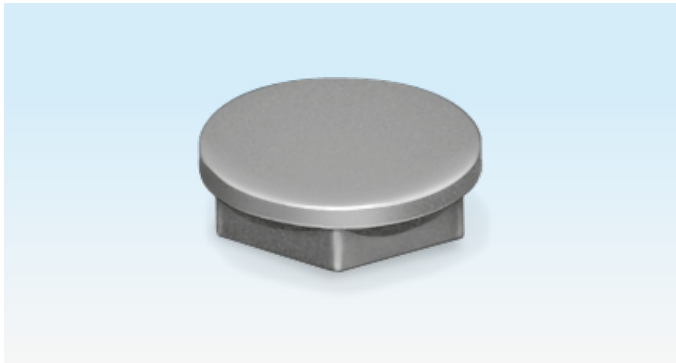

Colour coordination set

In order to facilitate reading for pressure switches with the same switching point setting, for example, a scale mark can be used. The scale mark can simply be clipped on and is available in different colours as a colour coordination set, see accessories, page 31 (6.15 Colour coordination set).

1.5 Tube set with diverse possible applications

Tube set

Duct connection flanges and angle connectors connect the pressure switch and pressure test point. See accessories, page 29 (6.8 Tube set).

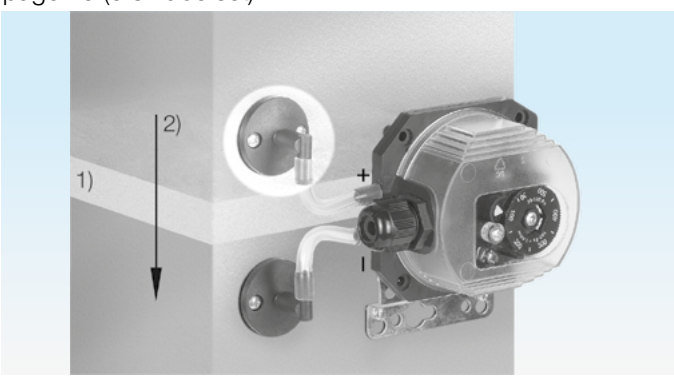

1) Filter pad
2) Flow direction

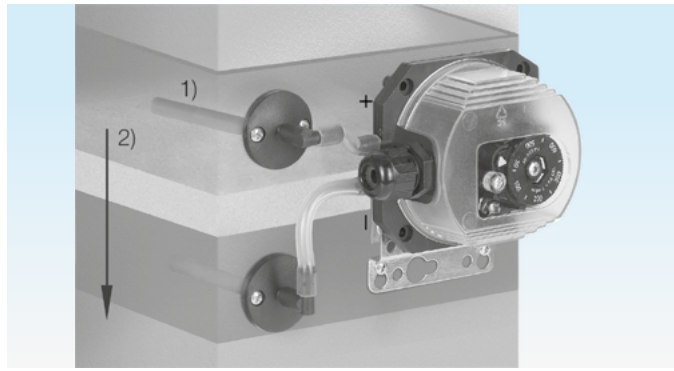

1) Extension
2) Flow direction

Using the extension, the pressure switch can be used on insulated and lagged ducts.

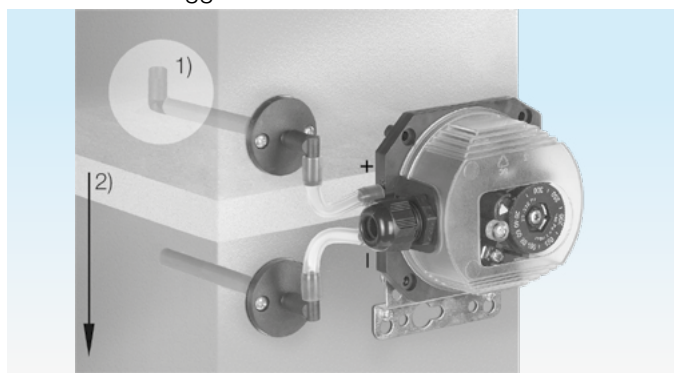

1) Angle connector
2) Flow direction

The angle connector reinforces the Δp signal if it is too low for the pressure switch adjusting range.

1.6 Easier diagnosis and maintenance

Pilot lamp set

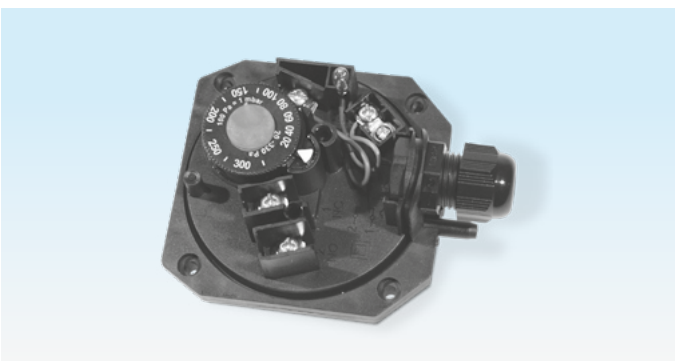

Either a red or a blue pilot lamp, or a red-green LED (24 V/230 V) indicates the switching status of the pressure switch. See accessories, page 30 (6.9 Pilot lamp set, red or blue) or page 30 (6.10 LED set, red/green).

2 Certification

2.1 Zertifikate Download

Certificates – see www.docuthek.com

2.2 EU certified

- 2014/35/EU (LVD), Low Voltage Directive
- 2014/30/EU (EMC), Electromagnetic Compatibility Directive
- 2011/65/EU, RoHS II
- 2015/863/EU, RoHS III
- (EU) 2016/426 (GAR), Gas Appliances Regulation
- EN 1854:2010

2.3 FM approved

Factory Mutual Research Class: 3510 Flow and pressure safety switches. Designed for applications pursuant to NFPA 85 and NFPA 86.

2.4 UR recognized

USA and Canada

AMP plug connection, see
page 16 (2.8 Overview of product approvals).
Underwriters Laboratories – UL 353 “Limit Controls”.

2.5 UL listed

USA and Canada

Electrical connection via screw terminals, see
page 16 (2.8 Overview of product approvals).
Underwriters Laboratories – UL 353 “Limit Controls”.

2.6 AGA approved

Australian Gas Association, Approval No.: 5484.

2.7 Eurasian Customs Union

The products DL meet the technical specifications of the Eurasian Customs Union.

2.8 Overview of product approvals

	Type
CE 2014/35/EU	DL 1–3E, DL 5–50E, DL 2–35E, DL 3,3–40K, DL 3K, DL 5–150K, DL 1,5–3A, DL 5–150A
CE (EU) 2016/426 – GAR	DL 1–3E, DL 5–50E, DL 2–35E, DL 3,3–40K, DL 3K, DL 5–150K, DL 1,5–3A, DL 5–150A
AGA	DL 1–3E, DL 5–50E, DL 3A, DL 5–150A, DL 3K, DL 5–150K
EAC	DL 1–3E, DL 5–50E, DL 2–35E, DL 3,3–40K, DL 3K, DL 5–150K, DL 1,5–3A, DL 5–150A
FM APPROVED	DL 1–3ET, DL 5–50ET, DL 2–35ET, DL 3,5–40KT-3, DL 3AT, DL 3KT, DL 5–50AT, DL 5–50KT
c UL us LISTED	DL 3AT, DL 5–50AT, DL 3,5–40Kt-3(except (except DL 3,3KT-3/DL 5,1KT-3), DL 3KT, DL 5–50KT 1)
c UR us	DL 2–35ET, DL 3,5–40Kt-1(except (except DL 3,3KT-1/DL 5,1KT-1), DL 1–3ET, DL 5–50ET 2)

1) DL..-3 with screw terminals: UL listed.
2) DL..-1 with AMP plugs: UR recognized.

3 Function

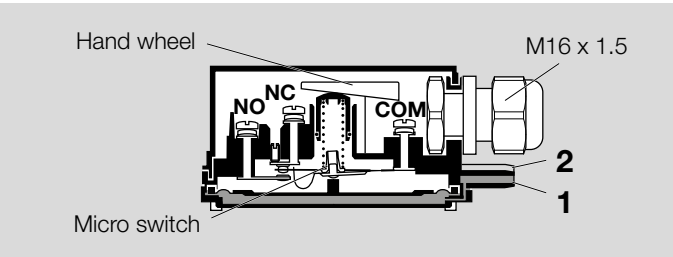

DL..K

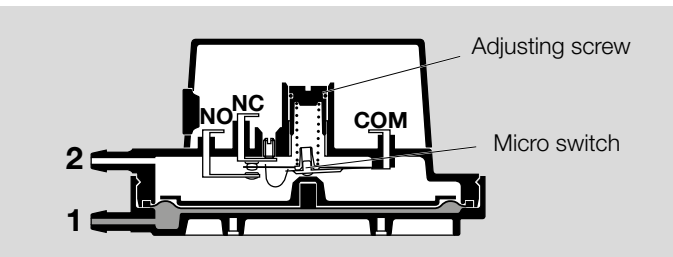

DL..E

The air pressure switch DL switches in the event of rising or falling pressure. Once the set switching point is reached, a micro switch is activated in the DL.

The switching pressure is adjusted against a spring force using a hand wheel or an adjusting screw.

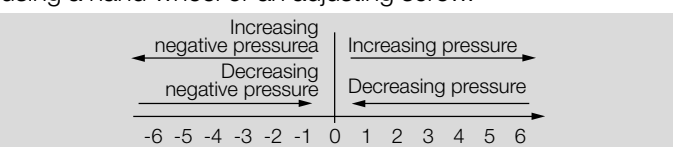

3.1 Positive pressure measurement

Positive pressure measurement is designed, for example, for checking the fan function or measuring the min./max. pressure.

The positive pressure is measured in the lower diaphragm chamber, port **1**. The upper diaphragm chamber is ventilated via port **2**.

DL 1,5A: hand wheel setting in the negative range

The positive pressure is measured in the upper diaphragm chamber, port **2**. The lower diaphragm chamber is ventilated via port **1**.

3.2 Negative pressure measurement

Negative pressure measurement is designed, for example, for checking air locks or the fan function.

The negative pressure is measured in the upper diaphragm chamber, port **2**. The lower diaphragm chamber is ventilated via port **1**.

DL 1,5A: hand wheel setting in the negative range

The negative pressure is measured in the lower diaphragm chamber, port **1**. The upper diaphragm chamber is ventilated via port **2**.

3.3 Differential pressure measurement

Differential pressure measurement is designed for safeguarding an air flow rate or for monitoring filters and fans, for example.

The higher absolute pressure is connected to port **1** and the lower absolute pressure to port **2**. The remaining ports must be tightly plugged.

DL 1,5A: hand wheel setting in the negative range

The higher absolute pressure is connected to port **2** and the lower absolute pressure to port **1**. The remaining ports must be tightly plugged.

3.4 Wiring

Vapours containing silicone can adversely affect the functioning of electrical contacts. When using silicone tubes, only use silicone tubes which have been sufficiently cured.

In the case of high humidity or aggressive gas components, we recommend using a pressure switch with gold contact due to its higher resistance to corrosion. Closed-circuit current monitoring is recommended under difficult operating conditions.

In the case of low switching capacities, such as 24 V, 8 mA, for example, we recommend using an RC module (22 Ω, 1 µF) in air containing silicone or oil.

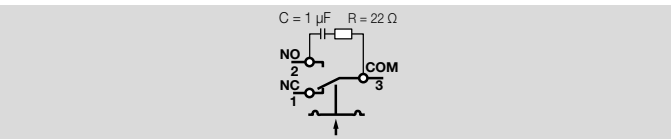

3.4.1 Rising pressure monitoring

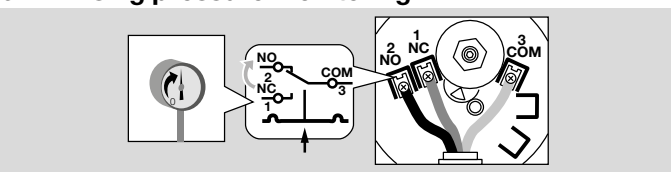

When the set switching point is reached, the contact closes from COM 3 to NO 2. Contact COM 3 to NC 1 is opened. With the NO contact, the NC contact is omitted.

3.4.2 Falling pressure monitoring

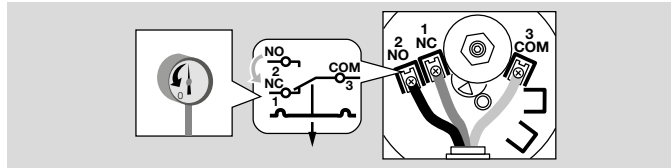

When the set switching point is reached, the contact closes from COM 3 to NC 1. Contact COM 3 to NO 2 is opened. With the NO contact, the NC contact is omitted.

3.4.3 Connection diagram

The connection of DL 1,5A depends on the positive or negative adjusting range.

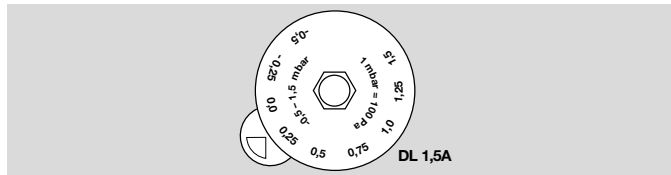

In the negative adjusting range, the template which can be found in the unit displays the connection diagram.

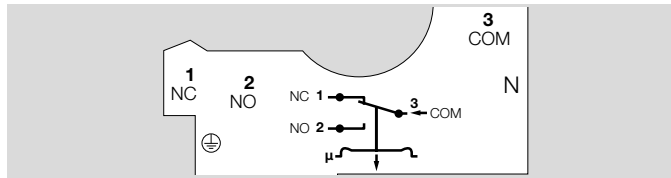

In the positive adjusting range, remove the template and wire the unit as shown in the engraved connection diagram.

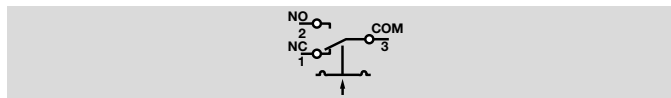

3.5 DL in Zone 1 (21) and 2 (22) hazardous areas

Pressure switch DL can be used in Zone 1 (21) and 2 (22) hazardous areas if an isolating amplifier is installed upstream in the safe area as “Ex-i” apparatus pursuant to EN 60079-11 (VDE 0170-7):2012.

DL as “simple electrical apparatus” pursuant to EN 60079-11:2012 corresponds to the Temperature class T6, Group II. The internal inductance/capacitance is Li = 0.2 µH/Ci = 8 pF.

The isolating amplifier transfers the DL’s signals from the explosion-hazard area to the safe area. Depending on the design of the intrinsically safe circuit, the explosion-hazard area can be monitored for cable faults, cable discontinuities or short-circuits.

Ensure that standard-compliant wiring pursuant to EN 60079 is used.

When operating in Zones 21 and 22, the 1/8" connecting thread or the tube connection for the surrounding air or medium connection must be protected from dirt particles by a separate filter.

3.5.1 Intrinsically safe circuit without monitoring for cable faults

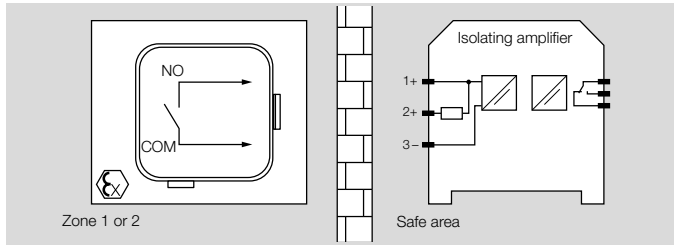

3.5.2 Intrinsically safe circuit with monitoring for cable discontinuities

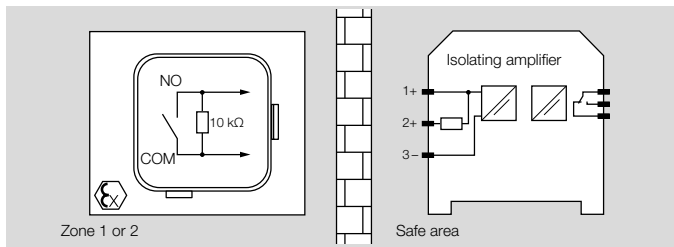

3.5.3 Intrinsically safe circuit with monitoring for cable faults and short-circuits

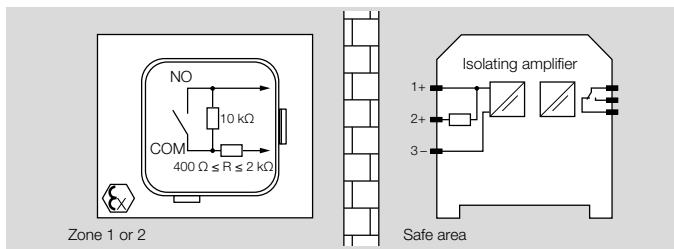

4 Selection

Type	Frequent application			Version													Mounting					Accessories			Enclosure [IP]	
	Air-conditioning systems/ kitchens	Condensing boilers	Laboratories, industrial firing-systems, butterfly valves for air and fire dampers	Adjusting range in Pascal	Adjusting range in mbar	Hand wheel	Adjusting screw	Screw terminals	AMP plugs	Tube connection	Threaded connection	Pilot lamp/Pilot LED	Standard socket set	Test key in lower chamber	Test key in upper chamber	Measuring instrument/pressure signal connection	Securing clip S	Securing clip D	L-angle bracket	Z-angle bracket	U-angle bracket	External adjustment	Tube set	Motor flange adapter	Standard	Maximum*
DL 3,3 – 40K	●			●		●		●	○	●		○	○				○	○	○	○			○	○	54	54
DL 2 – 35E		●		●			●		●	●							○	○	○	○			○	○	10/21	44
DL 1,5 – 3A			●	○	●	●		●		●	●	○	○							○	○	○	○	○	54	65
DL 5 – 150A			●	○	●	●		●		●	●	○	○	●	○					○	○	○	○	○	54	65
DL 10 – 150AH/..AN		●	●	○	●	●		●		●	●	○	○		○					○	○	○	○	○	54	65
DL 3K	●		●	○	●	●		●		●		○	○							●	○	○	○	○	54	65
DL 5 – 150K	●		●	○	●	●		●		●		○	○							●	○	○	○	○	54	65
DL 10 – 150KH/..KN		●	●	○	●	●		●		●		○	○							●	○	○	○	○	54	65
DL 1 – 3E		●		○	●		●		●	●										○	○		○	○	10/21	44
DL 5 – 50E		●		○	●		●		●	●						○				○	○		○	○	10/21	44

● = standard, ○ = available

* The enclosure depends on the version, installation position and whether a cable grommet is being used.

Adjusting range and switching hysteresis, see page 33 (7 Technical data).

4.1 ProFi

A web app selecting the correct product is available at www.adlatus.org.

4.2 Type code DL 3,3–40K

DL	Pressure switch for air
1,5	Adjusting range -0.5 – +1.5 mbar
3	Adjusting range 0.2–3 mbar
5	Adjusting range 0.4–5 mbar
10	Adjusting range 1.0–10 mbar
30	Adjusting range 2.5–30 mbar
50	Adjusting range 2.5–50 mbar
150	Adjusting range 30–150 mbar
A	Rp 1/4 connection, tube connection, hand wheel
K	With tube connection, hand wheel
H	Switches and locks off with rising pressure
N	Switches and locks off with falling pressure
G	With gold contacts
-3	Electrical connection via screw terminals, IP 54
-4	Electrical connection via screw terminals, IP 65
-5	Electrical connection via 4-pin plug, without socket, IP 54
-6	Electrical connection via 4-pin plug, with socket, IP 54
-9	Electrical connection via 4-pin plug, with socket, IP 65
K2	Red/green pilot LED for 24 V DC/AC
T	Blue pilot lamp for 230 V AC
T2	Red/green pilot LED for 110 to 230 V AC
N	Blue pilot lamp for 120 V AC
P	With test tapping point
1	With 1 test key
2	With 2 test keys
A	External adjustment
W	Z-angle bracket

4.3 Type code DL 3,5–40KT

DL	Pressure switch for air
3	Adjusting range 0.12–1.2 “WC (0.3–3 mbar)
5	Adjusting range 0.2–2 “WC (0.5–5 mbar)
10	Adjusting range 0.4–4 “WC (1-10 mbar)
50	Adjusting range 1.0–20 “WC (2.5–50 mbar)
A	1/4" NPT connection, tube connection, hand wheel
K	With tube connection, hand wheel
T	T-product
G	With gold contacts for voltages 12–250 V
-1	AMP plug connection (UR recognized)
-2	Electrical connection via screw terminals (UL listed), IP 54
K2	Red/green pilot LED for 24 V DC/AC
N	Blue pilot lamp for 120 V AC

4.3.1 Electrical connection of DL 3,3–40K

DL..K-1 for wiring with AMP plugs

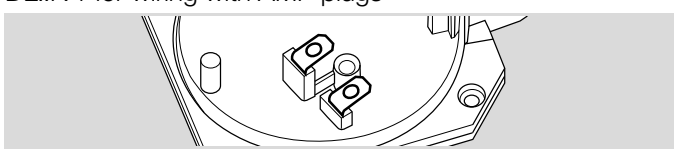

DL..K-3 for wiring via screw terminals

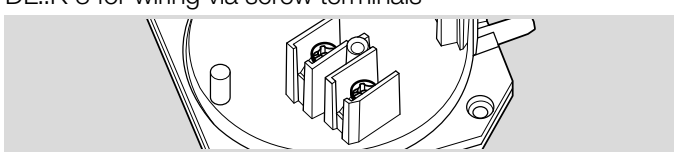

4.4 Type code DL 2–35E

DL	Pressure switch for air
2	Adjusting range 20-200 Pa
4	Adjusting range 50-400 Pa
14	Adjusting range 300–1400 Pa
35	Adjusting range 300–1400 Pa
E	With tube connection, adjusting screw
H	Temperature range -40 – +110 °C (-40 – +230 °F)
G	With gold contacts
-1	AMP plug connection
W	Z-angle bracket

DL 2: Switching point 20–30 Pa when installed upside down.
Adjusting range: DL..2EH: 45–200 Pa, DL..4EH: 70–400 Pa.

4.5 Type code DL 2–35ET

DL	Pressure switch for air
2	Adjusting range 0.12–0.8 “WC (20–200 Pa)
4	Adjusting range 0.2–1.6 “WC (50–400 Pa)
14	Adjusting range 1.2–5.6 “WC (300–1400 Pa)
35	Adjusting range 4.8–14 “WC (1200–3500 Pa)
E	With tube connection, adjusting screw
T	T-product
G	With gold contacts for voltages 12–250 V
-1	AMP plug connection (UR recognized)

DL 2: Switching point 0.08–0.12 “WC when installed upside down.

4.5.1 Electrical connection of DL 2–35E

Wiring with AMP plugs

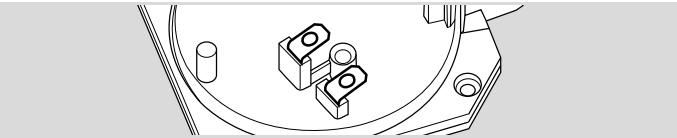

4.5.2 Switching differential/switching point of DL 2E, DL 4E depending on installation position

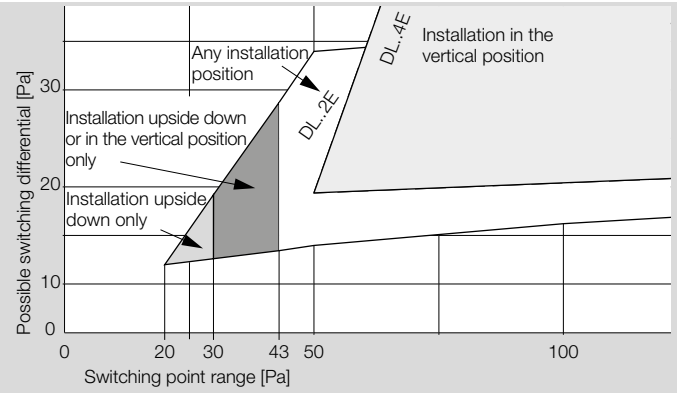

4.6 Type code DL..A, DL..K, DL..AH, DL..AN, DL..KH, DL..KN

DL	Pressure switch for air
1,5	Adjusting range -0.5 – +1.5 mbar
3	Adjusting range 0.2–3 mbar
5	Adjusting range 0.4–5 mbar
10	Adjusting range 1.0–10 mbar
30	Adjusting range 2.5–30 mbar
50	Adjusting range 2.5–50 mbar
150	Adjusting range 30–150 mbar
A	Rp 1/4 connection, tube connection, hand wheel
K	With tube connection, hand wheel
H	Switches and locks off with rising pressure
N	Switches and locks off with falling pressure
G	With gold contacts
-3	Electrical connection via screw terminals, IP 54
-4	Electrical connection via screw terminals, IP 65
-5	Electrical connection via 4-pin plug, without socket, IP 54
-6	Electrical connection via 4-pin plug, with socket, IP 54
-9	Electrical connection via 4-pin plug, with socket, IP 65
K2	Red/green pilot LED for 24 V DC/AC
T	Blue pilot lamp for 230 V AC
T2	Red/green pilot LED for 110 to 230 V AC
N	Blue pilot lamp for 120 V AC
P	With test tapping point
1	With 1 test key
2	With 2 test keys
A	External adjustment
W	Z-angle bracket

1) Only available as DL..A.
2) Only for DL..10, DL..50, DL..150.
3) Only for DL 5–150K.
4) Only for DL 5–150A.

4.6.1 Electrical connection DL..A, DL..K

Wiring via screw terminals

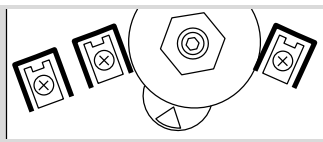

4.6.2 Test key on DL 5–150A

DL 5–150A..1: test key in lower chamber (+) or
DL 5–150A..2: test key in lower chamber (+) and upper chamber (-).

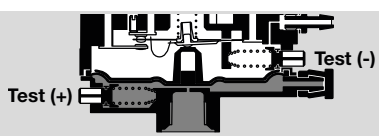

4.7 Type code DL 3–50AT, DL 3–50KT

DL	Pressure switch for air
3	Adjusting range 0.12–1.2 “WC (0.3–3 mbar)
5	Adjusting range 0.2–2 “WC (0.5–5 mbar)
10	Adjusting range 0.4–4 “WC (1-10 mbar)
50	Adjusting range 1.0–20 “WC (2.5–50 mbar)
A	1/4" NPT connection, tube connection, hand wheel
K	With tube connection, hand wheel
T	T-product
G	With gold contacts for voltages 12–250 V
-1	AMP plug connection (UR recognized)
-2	Electrical connection via screw terminals (UL listed), IP 54
K2	Red/green pilot LED for 24 V DC/AC
N	Blue pilot lamp for 120 V AC

4.8 Type code DL 1–50E

DL	Pressure switch for air
1	Adjusting range 0.2–1 mbar
3	Adjusting range 0.2–3 mbar
5	Adjusting range 0.4–5 mbar
10	Adjusting range 1.0–10 mbar
50	Adjusting range 2.5–50 mbar
E	With tube connection, adjusting screw
G	With gold contacts
-1	AMP plug connection
P	With test tapping point
W	Z-angle bracket

4.9 Type code DL 1–50ET

DL	Pressure switch for air
1	Adjusting range 0.08–0.4 “WC (0.2–1 mbar)
3	Adjusting range 0.12–1.2 “WC (0.3–3 mbar)
5	Adjusting range 0.2–2 “WC (0.5–5 mbar)
10	Adjusting range 0.4–4 “WC (1–10 mbar)
50	Adjusting range 1–20 “WC (2.5–50 mbar)
E	With tube connection, adjusting screw
T	T-product
-1	AMP plug connection (UR recognized)

4.9.1 Electrical connection of DL 1–50E-1

Wiring with AMP plugs

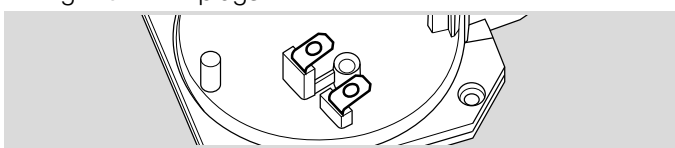

4.9.2 Test tapping point on DL 5–50E-1P

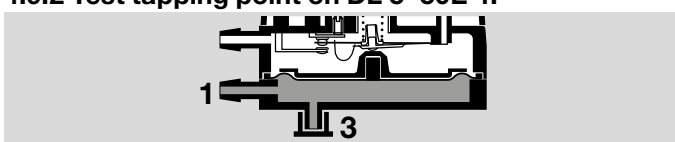

A measuring instrument can be connected to port **3** or the boiler pressure can be queried.

If port **3** is used for pressure measurement, the sealing cap must be transferred from port **3** to **1**.

5 Project planning information

5.1 Pressure switch with NBR diaphragm

Long-term use in the upper ambient temperature range accelerates the ageing of the elastomer materials and reduces the service life (please contact manufacturer).

Ozone concentrations exceeding 200 µg/m^3 accelerate the ageing of elastomer materials and reduce the service life.

5.2 Installation

Protect the connections against dirt or moisture in the medium to be measured or the surrounding air. If necessary, install a filter.

When installing outdoors, place the pressure switch in a roofed area and protect from direct sunlight (even IP 65 version). To avoid condensation, the cover with pressure equalization element can be used. See page 31 (6.17 Pressure equalization element).

In case of highly fluctuating pressures, install a restrictor orifice. See page 30 (6.13 Damping nozzle) or page 31 (6.14 Restrictor orifice).

In the case of an uneven mounting surface, secure the pressure switch to the mounting plate or air duct with only two screws on the same side in order to avoid subjecting the pressure switch to mechanical stress.

For attachment to a mounting plate using self-tapping screws for plastic, note the specified screw length. Longer screws can cause damage in the pressure switch.

Specifications for screw length, see page 33 (7 Technical data).

5.2.1 Installation position

Condensation must not be allowed to get into the housing.If possible, install pipework with an ascending gradient. Otherwise, there is a risk of icing of condensation at subzero temperatures, the switching point shifting or corrosion in the device which can lead to malfunctions.

Installation in the vertical or horizontal position, or sometimes upside down, preferably with vertical diaphragm. If installed in a vertical position, the switching point p_S will correspond to the scale value SK set on the hand wheel. If installed in another position, the switching point p_S will change and no longer correspond to the set scale value SK. Switching point p_S must be checked.

p_S = SK	SK + 13 Pa [+ 0,052 "WC]	SK - 13 Pa [- 0,052 "WC]
DL 3,3 – 40K		
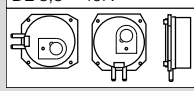		

Diaphragm: LSR

p_S = SK	SK + 13 Pa [+ 0,052 "WC]	SK - 13 Pa [- 0,052 "WC]
DL 2 – 35E		
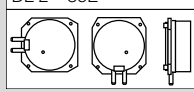		

Diaphragm: LSR

p_s = SK	SK + 18 Pa [+ 0,071 "WC]	SK - 18 Pa [- 0,071 "WC]
DL 1E, DL 3E		
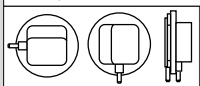		
DL 5E, DL 10E, DL 50E		
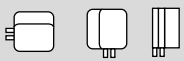		

Diaphragm: NBR

p_s = SK	SK + 0,18 mbar [+ 0,071 "WC]	SK - 0,18 mbar [- 0,071 "WC]
DL 1,5A		
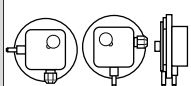	z. B. SK = -0,5: p_s = -0,5 + 0,18 p_s = -0,32 mbar	
DL 3K, DL 3A		
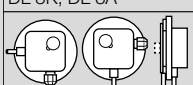		
DL 5 – 150A, DL 5 – 150K		
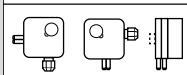		

Diaphragm: NBR

p_s = SK	SK + 0,18 mbar [+ 0,071 "WC]	SK - 0,18 mbar [- 0,071 "WC]
DL 10 – 150AH, ..AN, ..KH, ..KN		
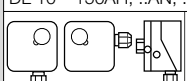		

Diaphragm: NBR

6 Accessories

6.1 Securing clip S

Only two holes in the mounting plate or air duct are required for secure mounting.

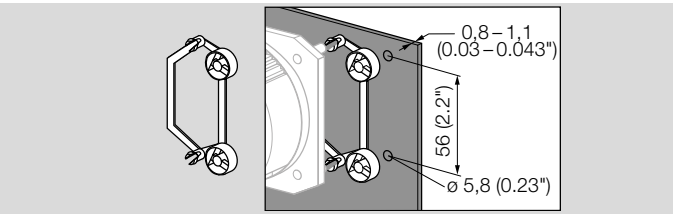

For DL 2–35E, DL 3,3–40K: Order No.: 34335764.

6.2 Securing clip D

For DL 2–35E, DL 3,3–40K.

For pressure-resistant mounting, the D clip is fitted to the mounting plate from the front or from the back. Simply push the pressure switch onto the clip.

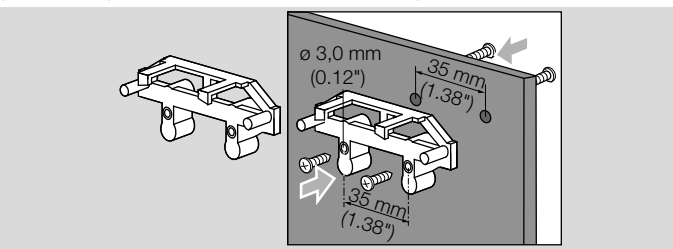

For attachment to the side of the pressure port: white clip. Order No.: 74921513.

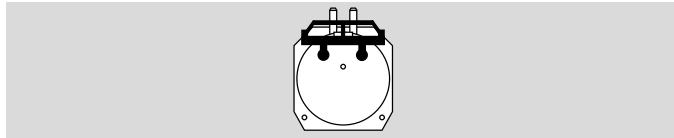

For attachment to the three other sides: blue clip. Order No.: 74921512.

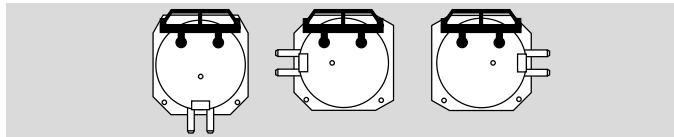

6.3 L-angle bracket (A)

For DL 2–35E, DL 3,3–40K.

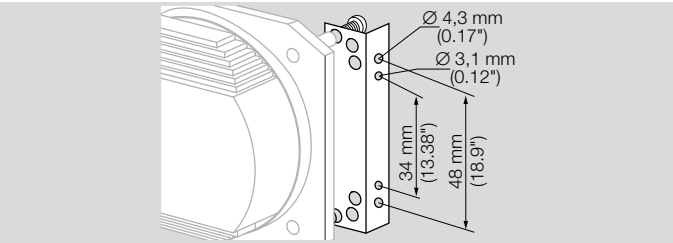

Shape A, Order No.: 74919825.

6.4 L-angle bracket (B)

For DL 2–35E, DL 3,3–40K.

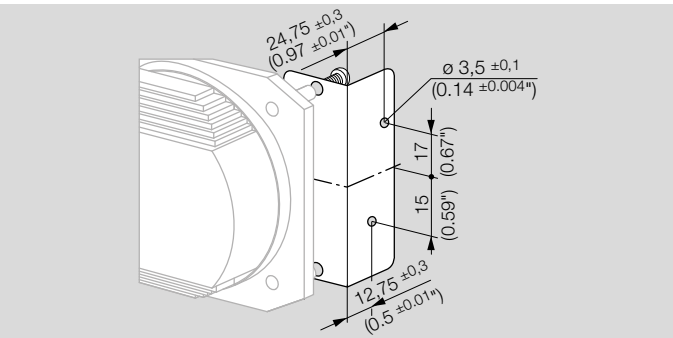

Shape B, Order No.: 74921466.

6.5 Z-angle bracket

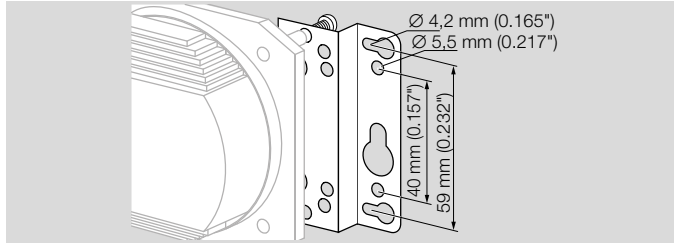

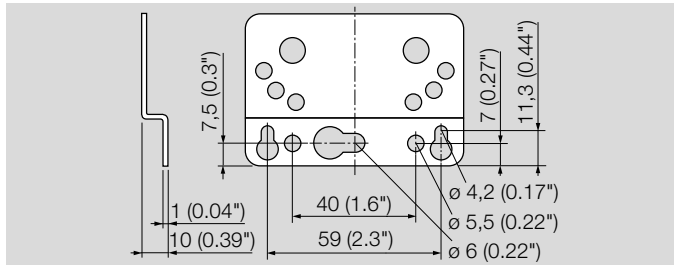

For DL 2–35E, DL 3,3–40K: Order No. 74919824.

For DL 5–50E, DL 5–150K: Order No. 74916158.

For DL 3–150A, DL 3K und DL 1–3E: Order No. 74913661.

6.6 U-angle bracket

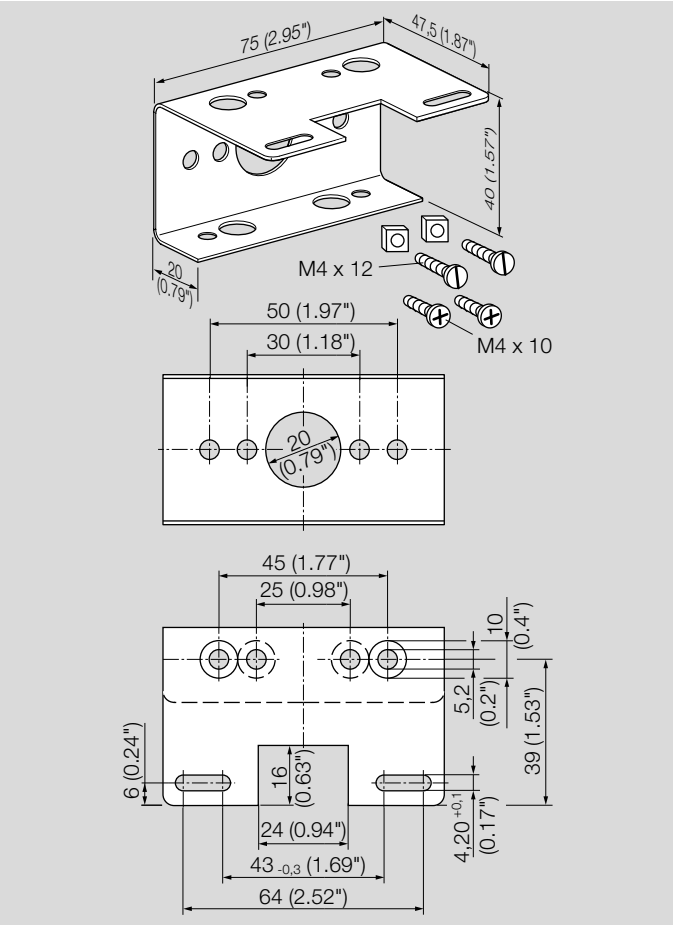

For DL 1,5–150A, DL 3–150K, DL 1–50E: Order No. 74916185.

6.7 Tube set

To be used with air only.

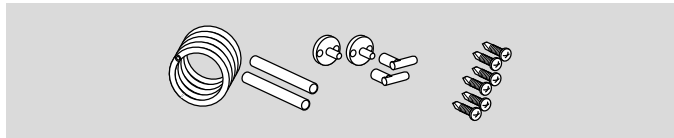

With 2 m PVC tube, 2 duct connection flanges with screws, 2 x 90 mm extensions, 2 angle connectors for DL

Order No.: 74919272.

6.8 Tube set

To be used with air only.

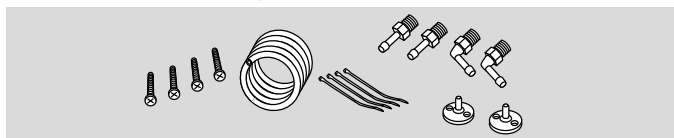

Tube set with 2 m PVC tube, 2 duct connection flanges with screws, R 1/4 and R 1/8 connecting nipples.

Order No.: 74912952.

6.9 Pilot lamp set, red or blue

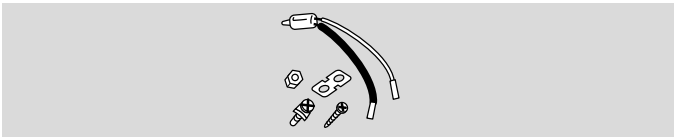

For DL..A, DL..K

Pilot lamp, red:
110/120 V AC, I = 1.2 mA, Order No.: 74920430.
230 V AC, I = 0.6 mA, Order No.: 74920429.

Pilot lamp, blue:
110/120 V AC, I = 1.2 mA, Order No.: 74916121.
230 V AC, I = 0.6 mA, Order No.: 74916122.

6.10 LED set, red/green

For DL..A, DL..K

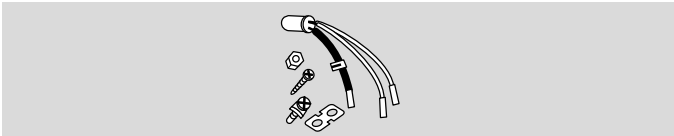

24 V DC, I = 16 mA; 24 V AC, I = 8 mA, Order No.: 74921089.

110 to 230 V AC, Order No.: 74923275

6.11 Standard coupler plug set

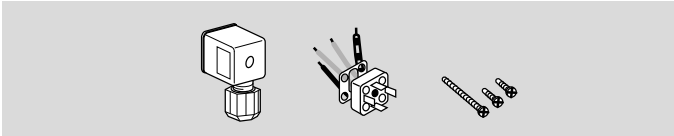

For DL..A, DL..K: Order No. 74916159.

6.12 Motor flange adapter

Set including retaining screws for direct mounting on the fan motor.

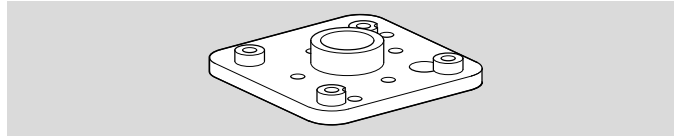

Order No.:

DL 5–50E: 74916149

DL 1–3E, DL 3–150A, DL 3–5K: 74916157

DL 5–150K: 74916156

DL 2/4/14/35E, DL 3,5/4,5/8/16/24/40K: 74920415

6.13 Damping nozzle

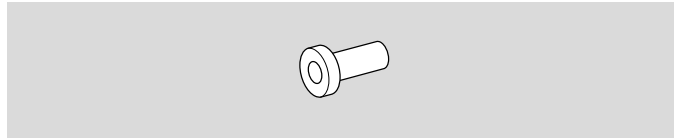

In the case of high pressure fluctuations, we recommend using a damping nozzle for tube connections: 10 x Damping nozzle, Ø = 0.8 mm (0.03"), Order No.: 75459541.

6.14 Restrictor orifice

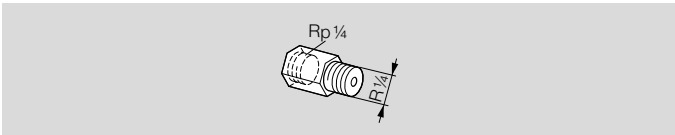

For CE certified pressure switches.

In the case of high pressure fluctuations, we recommend using a restrictor orifice (contains non-ferrous metals).

Hole diameter 0.2 mm, Order No.: 75456321
Hole diameter 0.3 mm, Order No.: 75441317

6.15 Colour coordination set

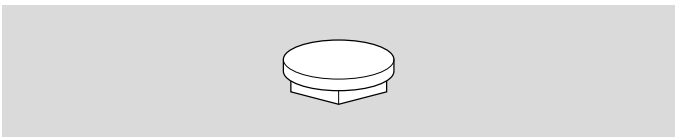

The scale mark is available in each case as a 5-piece set.

Colour coordination set, blue, Order No.: 74921726,
Colour coordination set, yellow, Order No.: 74921727.

6.16 External adjustment

In order to set the switching pressure from the outside, the cover for external adjustment (6 mm Allen key) for DL can be retrofitted.

Order No.: 74916155

6.17 Pressure equalization element

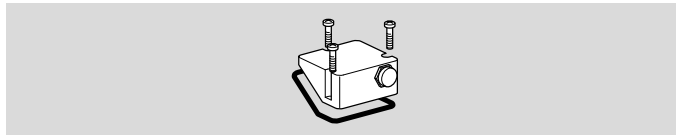

For CE certified pressure switches.

To avoid the formation of condensation, the cover with pressure equalization element can be used. The diaphragm in the screw connector is designed to ventilate the cover, without allowing water to enter.

Order No.: 74923391

6.18 DL 2–35E: grommet

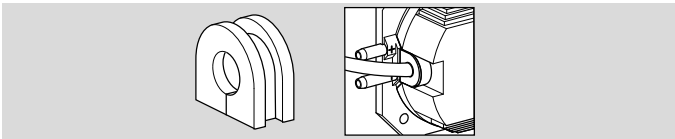

Grommet for enclosure IP 42/IP 44 depending on the installation position.

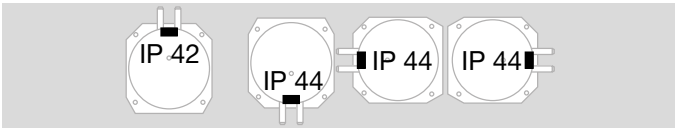

Installation in the horizontal position and upside down: IP 44

Order No.: 34919801

6.19 DL 1–50E: grommet

Grommet for enclosure IP 42.

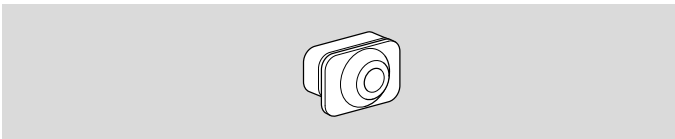

Order No.: 34328197

Grommet for enclosure IP 44.

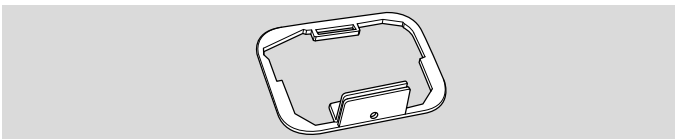

Order No.: 34330703

7 Technical data

Micro switch to EN 61058-1.

Gas types: air or flue gas, no flammable gases, no aggressive gases.

Icing, condensation and dew in and on the unit are not permitted.

Safety class II to VDE 0106-1.

This unit is not suitable for cleaning with a high-pressure cleaner and/or cleaning products.

7.1 Switching capacity

	U	I (cos φ = 1)	I (cos φ = 0.6)
DL	24–250 V AC	0.05–5 A	0.05–1 A
DL..G	5–250 V AC	0.01–5 A	0.01–1 A
DL..G	5–48 V DC	0.01–1 A	0.01–1 A
DL..T	30–240 V AC	5 A	0.5 A
DL..TG	< 30 V AC/DC	0.1 A	0.05 A

Contact gap < 3 mm (µ).

If the pressure switch has switched a voltage > 24 V (> 30 V) and a current > 0.1 A at cos φ = 1 or > 0.05 A at cos φ = 0.6 once, the gold plating on the contacts will have been burnt through. It can then only be operated at this power rating or higher power rating.

7.2 DL..K

Ambient conditions

Enclosure to IEC 60529: IP 54.

Permitted ambient temperature in operation:
DL..K: -20 to +85°C (-4 to +185°F),
DL..KT: -40 to +60°C (-40 to +140°F).

Storage and transport temperatures:
-20 to +40°C (-4 to +104°F).

Mechanical data

Medium temperature = ambient temperature.

Max. inlet pressure $p_{max.}$ = withstand pressure: 5 kPa, differential pressure: 5 kPa.
Switching differential, see page 34 (7.2.2 Adjusting range).

Diaphragm pressure switch, tempered LSR diaphragm system.

Housing: glass fibre reinforced PBT plastic with low gas release.

Weight: 125 g (4.4 oz).

Recommended tightening torque:

Component	Tightening torque [Ncm]
Cover screws	60
M16 x 1.5 cable gland	50
Clamping terminal screws	80

Electrical data

Line entrance: M16 x 1.5 (1/2" NPT conduit),
clamping range: diameters of 4 to 10 mm.
Type of connection: screw terminals,
cable diameter: 0.5 to 1.8 mm (AWG 24 to AWG 13).

7.2.1 Dimensions

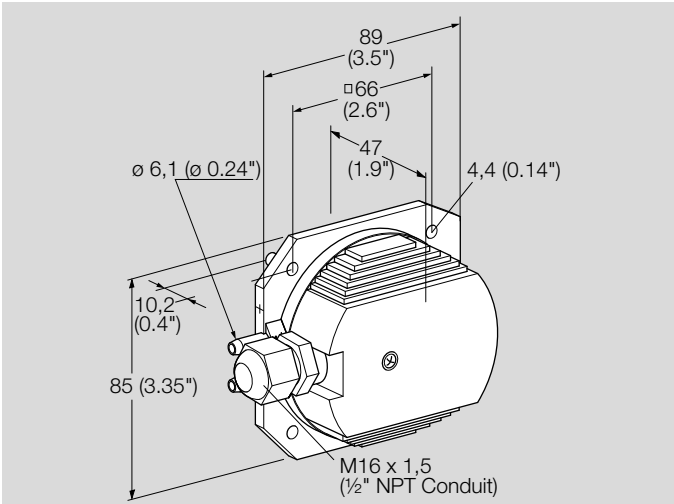

DL..K

7.2.2 Adjusting range

Type	Adjusting range [Pa]		Mean switching differential[1)] [Pa]	
	min.	max.	min.	max.
DL 3,3K	20	330	8	20
DL 3,5K	30	350	10	20
DL 4,5K	30	500	12	25
DL 5,1 K	100	510	15	30
DL 8K	50	800	17	30
DL 11K	100	1100	20	35
DL 16K	400	1600	30	40
DL 24K	200	2400	45	55
DL 40K	500	4000	70	90

Type	Adjusting range ["WC]		Mean switching differential[1)] ["WC]	
	min.	max.	min.	max.
DL 3,5KT	0.12	1.4	0.04	0.08
DL 4,5KT	0.12	2	0.05	0.10
DL 8KT	0.20	3.2	0.07	0.12
DL 11KT	0.4	4.4	0.08	0.14
DL 16KT	1.6	6.4	0.12	0.16
DL 24KT	0.8	9.6	0.18	0.22
DL 40KT	2.0	16.0	0.28	0.36

1) Mean switching differential at min. and max. setting.

Type	Deviation from the switching point during testing pursuant to EN 1854 or by agreement	
DL 3,3K	± 7 Pa/± 15%	
DL 3,5K, DL 3,5KT	± 5 Pa/± 15%	± 0.02 "WC/± 15%
DL 4,5K, DL 4,5KT	± 5 Pa/± 15%	± 0.02 "WC/± 15%
DL 5,1 K	± 15%	
DL 8K, DL 8KT	± 14 Pa/± 15%	± 0.06 "WC/± 15%
DL 11K, DL 11KT	± 20 Pa/± 15%	± 0.08 "WC/± 15%
DL 16K, DL 16KT	± 15%	± 15%
DL 24K, DL 24KT	± 40 Pa/± 15%	± 0.16 "WC/± 15%
DL 40K, DL 40KT	± 15%	± 15%

7.3 DL..A, DL..K

Ambient conditions

Enclosure to IEC 60529: IP 54 (IP 65).

Permitted ambient temperature in operation:
DL..A, DL..K: -20 – +80 °C (-4 – +176 °F),
DL..AH/..AN, DL..KH/..KN: -15 – +60 °C (+5 – +140 °F),
DL..T: -40 – +60 °C (-40 – +140 °F).

Storage and transport temperatures:
-20 to +40°C (-4 to +104°F).

7.3.1 Mechanical data

Medium temperature = ambient temperature.

Max. inlet pressure $p_{max.}$ = withstand pressure, switching differential, see page 37 (7.3.4 Adjusting range).

Diaphragm pressure switch, NBR, silicone-free.

Housing: glass fibre reinforced PBT plastic with low gas release.

Weight: DL..A: 190 g (6,7 oz), DL..K: 220 g (7,8 oz)

Recommended tightening torque:

Component	Tightening torque [Ncm]
Cover screws	65
M16 x 1.5 cable gland	50
Clamping terminal screws	80
Rp 1/8 connection on upper housing section	250
Rp 1/4 (1/4" NPT) connection on lower housing section	600

7.3.2 Electrical data

Line entrance: M16 x 1.5 (1/2" NPT conduit), clamping range: diameters of 4 to 10 mm.

Type of connection: screw terminals, cable diameter: 0.5 to 1.8 mm (AWG 24 to AWG 13).

7.3.3 Dimensions

The following screw specifications apply when using a (1 mm thick) mounting plate and self-tapping screws for plastic:

	Hole dia./depth	Screw dia./length
DL..A..	Ø 2.7 x 8 mm	Ø 3.5 x 8 mm
DL..A..	Ø 3.5 x 8 mm	Ø 4 x 8 mm
DL 3K	Ø 2.7 x 8 mm	Ø 3 x 8 mm
DL 3K	Ø 3.5 x 8 mm	Ø 4 x 8 mm
DL 5–150K	Ø 3 x 16 mm	Ø 3.5 x 16 mm

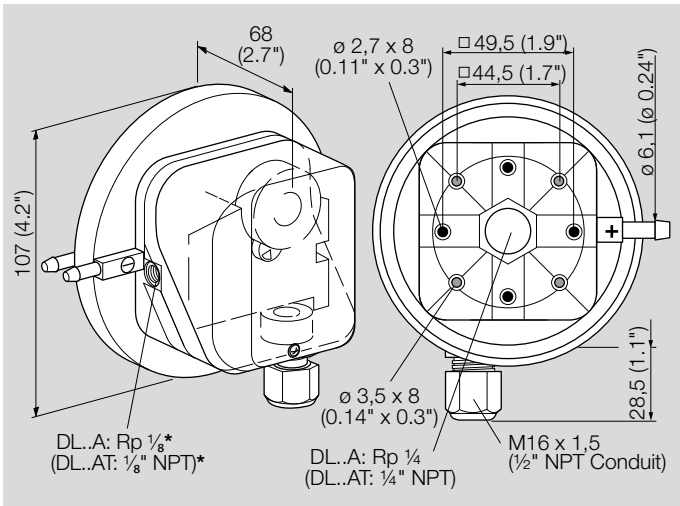

DL 1,5A, DL 3A

** Optional*

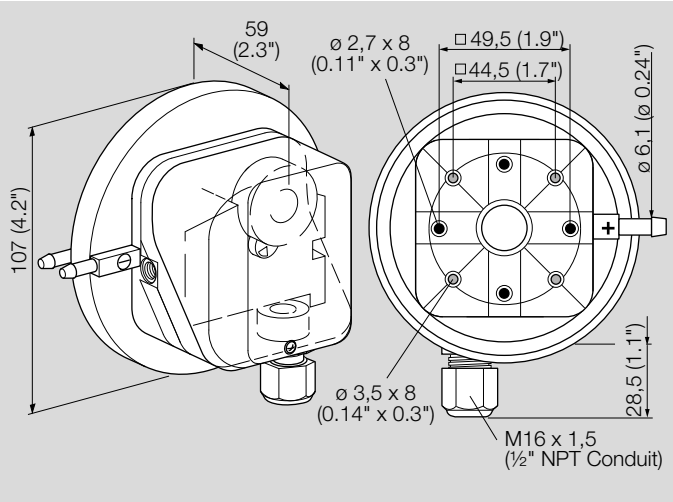

DL 3K

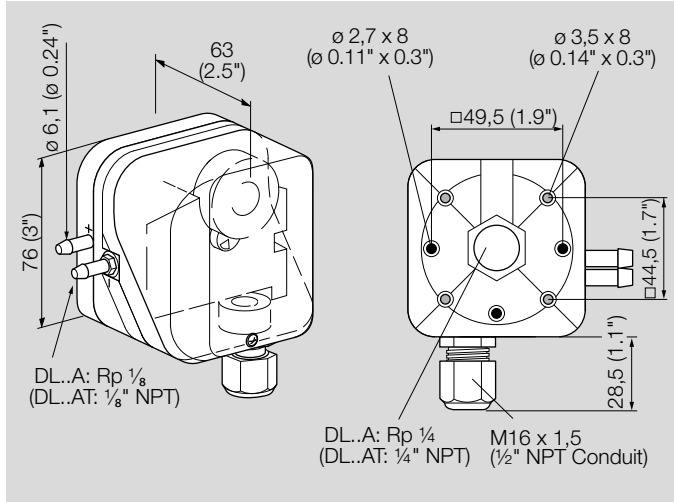

DL 5–150A, DL 10AH/..AN–150AH/..AN

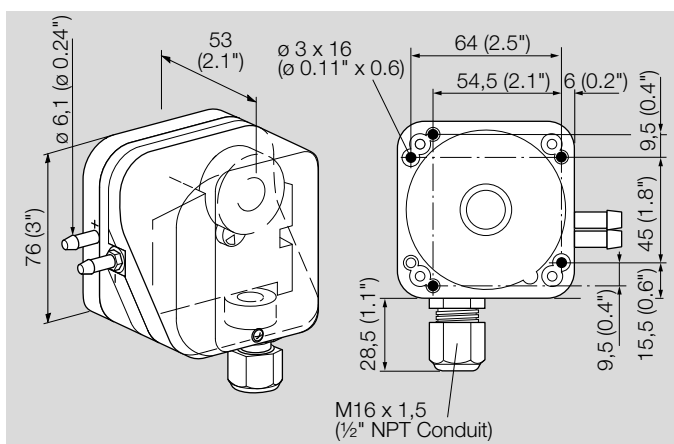

DL 5–150K, DL 10KH/..KN–150KH/..KN

7.3.4 Adjusting range

	Adjusting range[1] [mbar]		Max. inlet pressure[2] [mbar]	Mean switching differential[3] [mbar]	
	min.	max.		min.	max.
DL 1,5A	-0.5	1.5	50	0.1	0.16
DL 3A, DL 3K	0.2	3	50	0.1	0.16
DL 3AT, DL 3KT	0.3	3	150	0.1	0.16
DL 5A, DL 5K	0.4	6	300	0.2	0.3
DL 5AT, DL 5KT	0.5	5	300	0.2	0.3
DL 10A, DL 10K, DL 10AT, DL 10KT	1	10	300	0.25	0.4
DL 30A, DL 30K	2.5	30	300	0.35	0.9
DL 50A, DL 50K, DL 50AT, DL 50KT	2.5	50	300	0.8	1.5
DL 150A, DL 150K	30	150	300	3	5

	Adjusting range[1] ["WC]		Max. inlet pressure[2] ["WC]	Mean switching differential[3] ["WC]	
	min.	max.		min.	max.
DL 3AT, DL 3KT	0.12	1.2	58.5	0.04	0.06
DL 5AT, DL 5KT	0.2	2	117	0.08	0.12
DL 10AT, DL 10KT	0.4	4	117	0.1	0.16
DL 50AT, DL 50KT	1	20	117	0.3	0.6

1) Adjusting tolerance ± 15% of the scale value, but min. ± 4 Pa [± 0.016 "WC].
2) Max. inlet pressure = withstand pressure.
3) Mean switching differential at min. and max. setting.

Type	Deviation from the switching point during testing pursuant to EN 1854 Air pressure switches
DL 1,5A	± 15% or ± 6 Pa [± 0.02 "WC]
DL 3A, DL 3K DL 3AT, DL 3KT	± 15% or ± 6 Pa [± 0.02 "WC]
DL 5AT–DL50AT, DL 5KT–50KT	± 15% or ± 4 Pa [± 0.016 "WC]
DL 5–150A, DL 5–150K	± 15% or ± 4 Pa [± 0.016 "WC]

Type	Adjusting range[1] [mbar]	Max. inlet pressure[2] [mbar]	Reset pressure[3] [mbar]
DL 10..H, DL 10..N	1–10	300	0.4–1
DL 50..H, DL 50..N	2.5–50	300	1–2
DL 150..H, DL 150..N	30–150	300	2–5

Type	Adjusting range[1] ["WC]	Max. inlet pressure[2] ["WC]	Reset pressure[3] ["WC]
DL 10..H, DL 10..N	0.4–4	117	0.16–0.4
DL 50..H, DL 50..N	1–20	117	0.4–0.8
DL 150..H, DL 150..N	12–60	117	0.8–2

1) Adjusting tolerance = ± 15% of the scale value.
2) Max. inlet pressure = withstand pressure.
3) Difference between switching pressure and possible reset.

Deviation from the switching point during testing pursuant to EN 1854 Air pressure switches: ± 15%.

7.4 DL 1–50E

Ambient conditions

Enclosure to IEC 60529:
IP 10 = any installation position,
IP 21 = electrical connection from below,
IP 42/44 = with cable grommet, see accessories.

Permitted ambient temperature in operation:
-20 to +80°C (-4 to +176°F),
DL..T: -40 to +60°C (-40 to +140°F).

Storage and transport temperatures:
-20 to +40°C (-4 to +104°F).

Mechanical data

Medium temperature = ambient temperature.

Max. inlet pressure $p_{max.}$ = withstand pressure, switching differential, see page 39 (7.4.2 Adjusting range).

Diaphragm pressure switch, NBR, silicone-free.

Housing: glass fibre reinforced PBT plastic with low gas release.

DL 1E, DL 3E: 145 g (5.1 oz),
DL 5E–50E: 115 g (4 oz).

Recommended tightening torque:

Component	Tightening torque [Ncm]
Cover screws	50
Strain relief facility	60

7.4.1 Dimensions

The following screw specifications apply when using a (1 mm thick) mounting plate and self-tapping screws for plastic:

	Hole dia./depth	Screw dia./length
DL 1–3E	Ø 2.7 x 8 mm	Ø 3 x 8 mm
DL 1–3E	Ø 3.5 x 8 mm	Ø 4 x 8 mm
DL 5–50E	Ø 3 x 16 mm	Ø 3.5 x 16 mm
DL 5–50E	Ø 4.2	M4

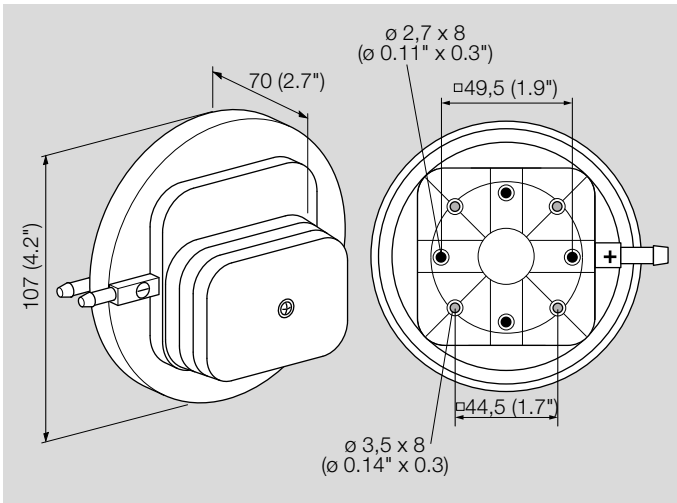

DL 1E, DL 3E

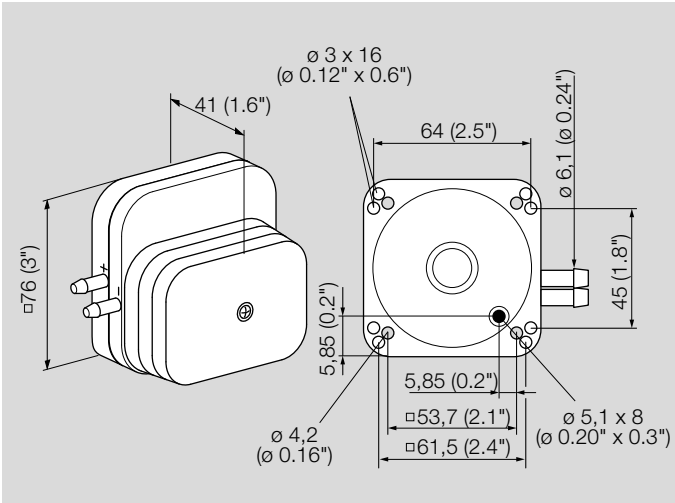

DL 5E-1P, DL 10E-1P, DL 50E-1P

7.4.2 Adjusting range

	Adjusting range[1] [mbar]		Max. inlet pressure[2] [mbar]	Mean switching differential[3] [mbar]	
	min.	max.		min.	max.
DL 1E	0.2	1	50	0.1	0.15
DL 3E	0.3	3	50	0.2	0.3
DL 5E	0.4	5	300	0.25	0.4
DL 5ET	0.5	5	300	0.25	0.4
DL 10E	1	10	300	0.3	0.4
DL 50E	2.5	50	300	0.5	1.3

	Adjusting range[1] ["WC]		Max. inlet pressure[2] ["WC]	Mean switching differential[3] ["WC]	
	min.	max.		min.	max.
DL 1ET	0.08	0.4	20	0.04	0.06
DL 3ET	0.12	1.2	20	0.08	0.12
DL 5ET	0.2	2	117	0.01	0.16
DL 10ET	0.4	4	117	0.12	0.16
DL 50ET	1	20	117	0.2	0.5

[1] Switching point adjusting tolerance: ± 15% or by agreement.
[2] Max. inlet pressure = withstand pressure.
[3] Mean switching differential at min. and max. setting.

Type	Deviation from the switching point during testing pursuant to EN 1854 Air pressure switches
DL 1E, DL 1ET	± 15% or ± 5 Pa [± 0.02 "WC]
DL 3E, DL 3ET	± 15% or ± 6 Pa [± 0.02 "WC]
DL 5E–50E, DL 5ET–50ET	± 15%

7.5 DL 2–35E

Ambient conditions

Enclosure to IEC 60529:
IP 00 = without cover,
IP 10 = any installation position with cover,
IP 21 = opening in cover points downwards,
IP 42/44 = cover with cable grommet.

Permitted ambient temperature in operation:
DL..E: -20 to +85°C (-4 to +185°F),
DL..EH: -40 to +110°C (-40 to +230°F),
DL..T: -40 to +60°C (-40 to +140°F).

Storage and transport temperatures:
DL..E, DL..T: -20 to +40°C (-4 to +104°F),
DL..EH: -20 to +60°C (-4 to +140°F).

Mechanical data

Medium temperature = ambient temperature.

Max. inlet pressure $p_{max.}$ = withstand pressure or differential pressure:
DL..E = 5000 Pa (20 "WC),
DL..EH = 1500 Pa (6 "WC),
DL..ET = 5000 Pa (20 "WC).
Switching differential, see page 41 (7.5.2 Adjusting range).

Diaphragm pressure switch, tempered LSR diaphragm system.

Housing: glass fibre reinforced PBT plastic with low gas release.

Weight: 83 g (2.9 oz).

Recommended tightening torque:

Component	Tightening torque [Ncm]
Cover screws	65
Strain relief facility	65

7.5.1 Dimensions

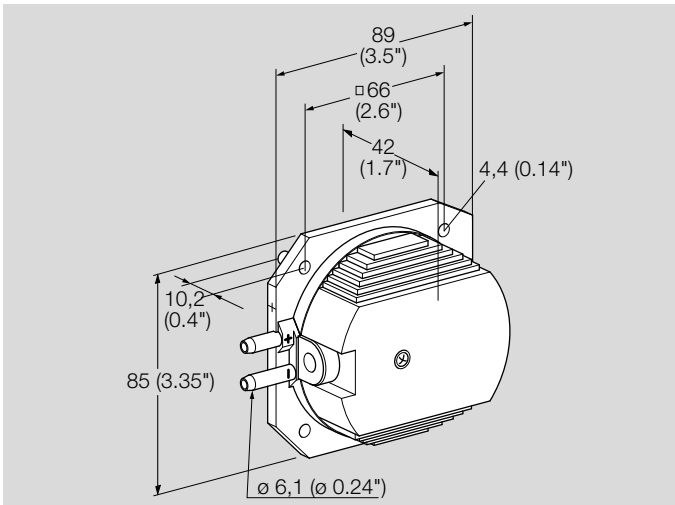

DL 2–35E

7.5.2 Adjusting range

Type	Adjusting range[1] [Pa]		Mean switching differential[2] [Pa]	
	min.	max.	min.	max.
DL 2E, DL 2ET	20	200	15	25
DL 2EH	45	200	15	25
DL 4E, DL 4ET	50	400	20	50
DL 4EH	70	400	20	50
DL 14E, DL 14ET	300	1400	30	60
DL 35E, DL 35ET	1200	3500	60	100

Type	Adjusting range[1] ["WC]		Mean switching differential[2] ["WC]	
	min.	max.	min.	max.
DL 2ET	0.12	0.8	0.05	0.10
DL 4ET	0.2	1.6	0.08	0.20
DL 14ET	1.20	5.6	0.12	0.24
DL 35ET	4.8	14.1	0.24	0.40

1) Adjusting tolerance ± 15% of the scale value, but min. ± 10 Pa [± 0.04 "WC].

2) Mean switching differential at min. and max. setting or by agreement.

Type	Deviation from the switching point during testing pursuant to EN 1854 Air pressure switches
DL 2E, DL 2ET	± 15%/min. ± 6 Pa [± 0.02 "WC]
DL 2EH	± 15%/min. ± 8 Pa
DL 4E, DL 4ET	± 15%/min. ± 8 Pa [± 0.03 "WC]
DL 4EH	± 15%/min. ± 12 Pa
DL 14E, DL 14ET	± 15%/min. ± 40 Pa [± 0.16 "WC]
DL 35E, DL 35ET	± 15%/min. ± 90 Pa [± 0.36 "WC]

8 Converting units

See www.adlatus.org

9 Maintenance cycles

DL requires little servicing.

We recommend a function check once a year.

For more information

The Honeywell Thermal Solutions family of products includes Honeywell Combustion Safety, Eclipse, Exothermics, Hauck, Kromschröder and Maxon. To learn more about our products, visit ThermalSolutions.honeywell.com or contact your Honeywell Sales Engineer.

Elster GmbH
Strotheweg 1, D-49504 Lotte
T +49 541 1214-0
hts.lotte@honeywell.com
www.kromschroeder.com

© 2022 Elster GmbH

We reserve the right to make technical modifications in the interests of progress.

DL · Edition 03.22 · EN