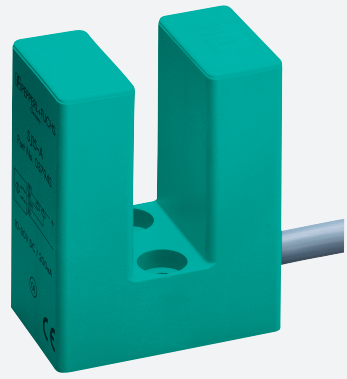

Inductive slot sensor

SJ15-A-5M

- 15 mm slot width
- 4-wire DC

Dimensions

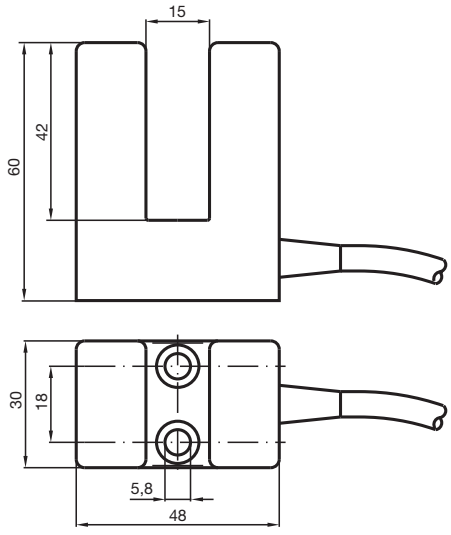

Technical Data

General specifications		
Switching function		complementary
Output type		NPN
Slot width		15 mm
Depth of immersion (lateral)		17 ... 20 mm
Output polarity		DC
Output type		4-wire
Nominal ratings		
Nominal voltage	U_o	8 V
Operating voltage	U_B	10 ... 30 V DC
Switching frequency	f	0 ... 500 Hz
Reverse polarity protection		reverse polarity protected
Short-circuit protection		pulsing

Release date: 2020-03-24 Date of issue: 2020-03-30 Filename: 108410_eng.pdf

ПРОМЭЛЕКТРОНИКА / sales@prom-elec.com

Technical Data

Voltage drop	U_d	≤ 3 V
Operating current	I_L	0 ... 200 mA
No-load supply current	I_0	≤ 20 mA
Compliance with standards and directives		
Standard conformity		
Standards		EN 60947-5-2:2007 IEC 60947-5-2:2007
Approvals and certificates		
UL approval		cULus Listed, General Purpose
CSA approval		cCSAus Listed, General Purpose
CCC approval		CCC approval / marking not required for products rated ≤36 V
Ambient conditions		
Ambient temperature		-25 ... 70 °C (-13 ... 158 °F)
Mechanical specifications		
Connection type		cable PVC , 5 m
Core cross-section		0.75 mm²
Housing material		PBT
Degree of protection		IP67

Connection

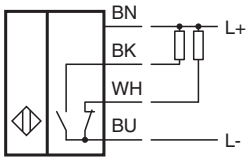

Release date: 2020-03-24 Date of issue: 2020-03-30 Filename: 108410_eng.pdf