resideo

RESIDEO BRAUKMANN F76S WATER FILTERS

High flow capacity water filter with Automatic Backwash Control

The F76S water filter is ideal for sediment removal applications. Used as a pre-filter, the F76 protects elements of the water system, including specialized treatment devices, geothermal equipment or other common fixtures and appliances. The flow, filtering capacity and ease of cleaning make the F76S ideal for the most demanding applications.

F76S WATER FILTERS

Efficient Clean For Demanding Applications

	PRODUCT NUMBER	SIZE	UNION CONNECTION
	F76S1007	1/2"	Sweat and NPT threaded tailpieces
	F76S1015	3/4"	Sweat and NPT threaded tailpieces
	F76S1023	1"	Sweat and NPT threaded tailpieces
	F76S1031	1-1/4"	Sweat and NPT threaded tailpieces
	F76S1049	1-1/2"	NPT threaded tailpieces
	F76S1056	2"	NPT threaded tailpieces

The F76 water filter comes standard with a 100 micron stainless steel screen. 20, 50 and 200 micron screen kits are available separately.

CAPACITY IN GALLONS PER MINUTE (GPM)

PRESSURE DROP (PSI) ACROSS FILTER	PIPE SIZE (IN.)					
	1/2	3/4	1	1-1/4	1-1/2	2
1	8	11	18	20	26	30
2	12	16	25	28	36	42
3	14	19	31	35	44	51
4	16	22	36	40	51	59
5	18	25	40	45	57	66
15	32	43	70	78	99	114
Flow Volume for 15 sec backwash at 60 psi inlet						
–	3.2	3.2	4.0	4.0	4.7	4.7

NOTE: Cv is equal to capacity at 1 psi pressure drop.

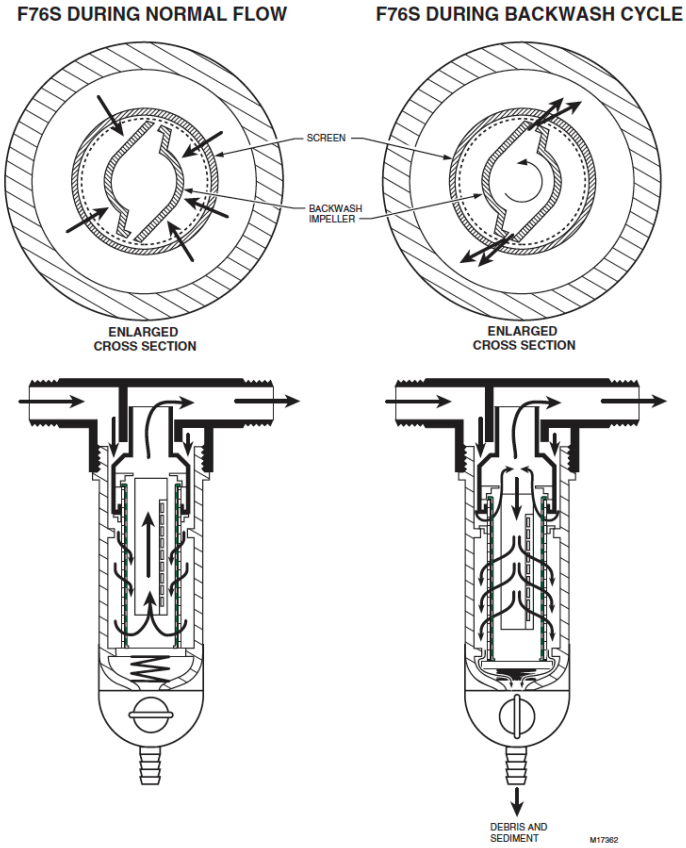

MV876B1018 Control Minimizes Guesswork

THE MV876B AUTOMATIC BACKWASH CONTROL is available as an accessory. This control is fitted to the drain valve and is programmed by the user to automatically perform the backwash function according to the desired interval. Sixteen field-selectable backwash intervals (from every four minutes to once every three months) eliminate the need for external timer. MV876 can also be manually activated to initiate backwash.

	PRODUCT NUMBER	DESCRIPTION
	MV876B1018	Bayonet mounted shaft of 24 Vac motor and timer replaces ball valve manual control for automatic backwash at preprogrammed intervals. 24V transformer not included

MV876B TIMER SELECTIONS

PROGRAM VALUE	BACKWASH INTERVAL
1	4 minutes
2	8 minutes
3	16 minutes
4	32 minutes
5	1 hour
6	2 hours
7	4 hours
8	8 hours
9	17 hours
10	34 hours
11	3 days
12	6 days
13	11 days
14	23 days
15	45 days
16	3 months

resideo

Resideo Technologies, Inc.
1985 Douglas Drive North
Golden Valley, MN 55422
1-800-468-1502
resideo.com

For more information
resideo.com/pro/water

67-7469 | PM | 05/21
© 2021 Resideo Technologies, Inc. All rights reserved.