SERIES Q

HEAD X

Q1300X
Q1520X

HEAD V

Q1300V

HEAD A

Q1520A

HEAD P

Q1520P

HEAD Y

Q1520Y

GB
M029149CA
Rev. 0.0
08-2025

ПРОМЭЛЕКТРОНИКА / sales@prom-elec.com

LET'S LIGHT UP THE FUTURE.

CIB Unigas was founded in 1972 as a small company by Mr. Claudio Pancolini. The remarkable creative and design skills of its technical staff enabled the company to penetrate the market quickly and effectively. Over the past 50 years, with the goal of promoting eco-sustainable fuels and applications, **CIB Unigas has become one of the leading companies in the design, production and sale of burners for civil and industrial applications.**

Factors such as the progressive shift in demand abroad (over 85% of current turnover) and the willingness to develop a solid distribution network, have allowed the company to **open numerous branches, particularly in the United Kingdom, China, and the United States, in addition to more than 60 official dealers worldwide.** This strengthened and widespread sales network, combined with the complete range of burners offered and the constant participation in international conferences and trade fairs, has made CIB Unigas a leader in its sector.

In 1994, CIB Unigas obtained ISO 9001 quality certification and product certification (CE marking), issued by the most authoritative European certification body (TÜV). This certification is the most comprehensive available in this industrial sector, covering design, production, marketing, and after-sales services. As a result, the company currently meets all national and international requirements to sell, market, and install its products worldwide.

Today, the company is managed by the founder's heirs Mr. Filippo Pancolini and Mr. Riccardo Pancolini, who ensure the continuity not only of the business but also of CIB Unigas' vision: developing technologies with the aim of protect our world and our future.**With over 200 employees, the company produces all its products at its Italian plant facility in Campodarsego (Padua), where its main activities of design, assembly and innovation take place.**

Thanks to the strong flexibility of its production and organizational structure, CIB Unigas is able to meet any demand quickly and according to the specific requirements that arise from the market. This means, not only the ability to produce in series, but above all, the creative strength to satisfy market demands—values that are at the core of the shared efforts at CIB Unigas.

SERIES Q

LOW NOx

Low emissions (Class 3 - EN676)
Possibility of working with innovative fuels with low environmental impact, such as hydrogen
Wide modulation range

HEAD X

Q1300X / Q1520X	GAS	7
Q1300X / Q1520X	GAS / LIGHT OIL	11

ULTRA LOW NOx

Low emissions (Class 4 - EN676)
Wide modulation range

HEAD V

Q1300V	GAS	15

High flexibility burners

Extensive flexibility
Adjustment flexibility
Ability to work with a variety of fuels
Many types of civil and industrial applications
Special applications and furnaces

HEAD A

Q1520A	GAS	19
Q1520A	GAS / LIGHT OIL	23

Industrial applications

Industrial applications
Also for Duablok versions
Highly reliable and robust for industrial use
For all special applications: from the use of the crudest oil to dense fuels, for clean and efficient combustion
Also suitable for recovered fuels (fuels derived from waste) such as synthetic gas, exhaust gas, cooling gas, waste oils, etc.

HEAD P

Q1520P	LIGHT OIL	27
Q1520P	HEAVY OIL	30
Q1520P	GAS / HEAVY OIL	32

HEAD Y

Q1520Y	HEAVY OIL	35
Q1520Y	GAS / HEAVY OIL	38

DESIGNATION M-. PR. SR. xx. A. 1. 50. EA. xxx.

FUEL
M - NATURAL GAS
L - L.P.G.
B - BIOGAS
C - TOWN GAS
G - LIGHT OIL
A - BIO DIESEL
K - KEROSENE
N - HEAVY OIL UP TO 50 cSt at 50°C (7°E - 50°C)
D - HEAVY OIL UP TO 400 cSt at 50°C (50°E - 50°C)

*** VARIOUS FUEL CONFIGURATIONS AVAILABLE IN THE DUAL-FUEL VERSION**

OPERATION
PR - PROGRESSIVE
MD - FULLY MODULATING

BLAST TUBE
S - STANDARD
M - STANDARD DUAL LENGTH BLAST TUBE
L - LONG

SP - Standard blast tube + ABS polymer (silenced) air intake
SR - Standard blast tube + ABS polymer (silenced) air intake
LP - Extended blast tube + aluminum air intake
LR - Extended blast tube + ABS polymer (silenced) air intake

DESTINATION COUNTRY
GB - UNITED KINGDOM
... AVAILABLE FOR OTHER COUNTRIES UPON REQUES

BURNER MANUFACTURE
A STANDARD
Y SPECIAL

G CONTROL PANEL AND JUNCTION BOX
E JUNCTION BOX

EQUIPMENT
0 2 GAS VALVES
1 2 GAS VALVES + LEAKAGE CONTROL
7 2 GAS VALVES + MAXIMUM GAS PRESSURE SWITCH
8 2 GAS VALVES + LEAKAGE CONTROL AND MAXIMUM GAS PRESSURE SWITCH

GAS CONNECTION
100 DN100
125 DN125

ELECTRONIC VERSION
EA Burners complete with electronic cam
EB Burners complete with electronic cam and inverter
EC Dual fuel burners complete with electronic cam
ED Dual fuel burners complete with electronic cam and inverter
ES Burners complete with electronic cam, without O_2 control, without inverter
EO Burners complete with electronic cam and O_2 control, without inverter
EI Burners complete with electronic cam and inverter, without O_2 control
EK Burners complete with electronic cam with O_2 control and with inverter
EF Burners complete with electronic cam and temperature-compensated flue gas recirculation FGR without O_2 monitoring, without inverter
EG Burners complete with electronic cam, inverter and temperature-compensated flue gas recirculation FGR without O_2 monitoring
EP Burners complete with electronic cam and temperature-compensated flue gas recirculation FGR witht O_2 monitoring, without inverter
ER Burners complete with electronic cam, inverter and temperature-compensated flue gas recirculation FGR with O_2 monitoring l

FLUE GAS RECIRCULATION
FGR Flue gas recirculation

SOME FEATURES ARE NOT INCLUDED IN THIS CATALOGUE

FOR CONFIGURATIONS OF BURNERS IN THE LAMTEC VERSION WITH O_2+CO OXYGEN CONTROL, PLEASE CONTACT OUR SALES DEPARTMENT.

HEAD X

Q1300X
Q1520X

Low NOx

- Low emissions (Class 3 - EN676)
- Possibility of working with innovative combustibles with low environmental impact such as
- Ample modulation range

GAS

TECHNICAL SPECIFICATIONS

Type	Model	Power kW min	max	Power supply single-phase electricity auxiliary	Power supply three-phase electric motor	Fan motor kW	Gas connections	Level of noise emissions dBA
Q1300X	M-.xx.x.IT.A.1.xxx	1.780	13.000	230 V 1N AC 50 Hz	400 V 3 AC 50 Hz	37,0	DN80 - DN100 - DN125	92,5
Q1520X	M-.xx.x.IT.A.1.xxx	2.500	15.200	230 V 1N AC 50 Hz	400 V 3 AC 50 Hz	37,0	DN80 - DN100 - DN125	92,5

For information on choosing the length of the blast tube, refer to the Technical Information booklet.

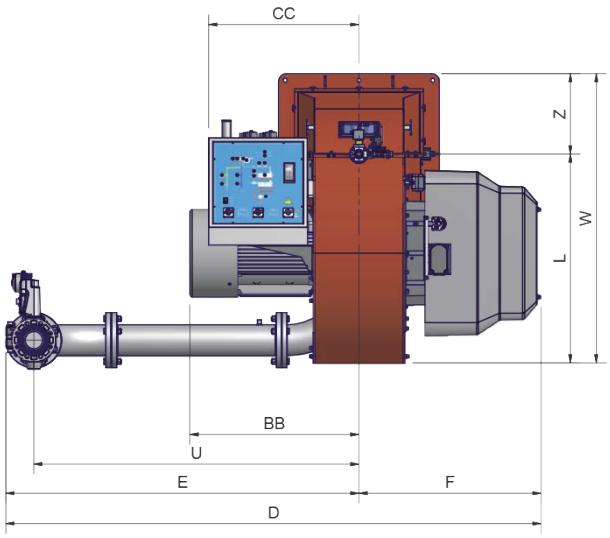

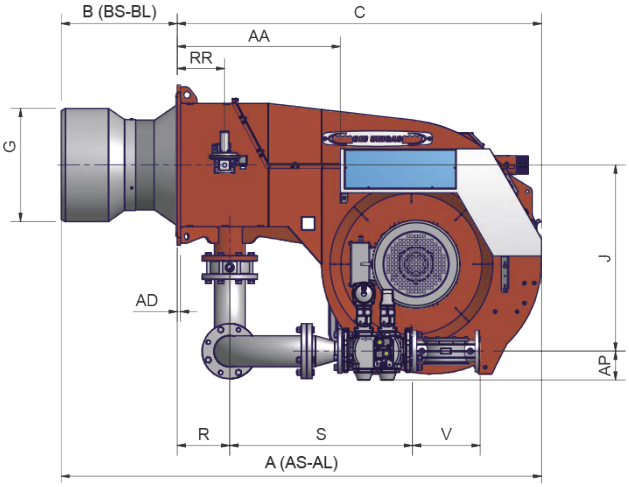

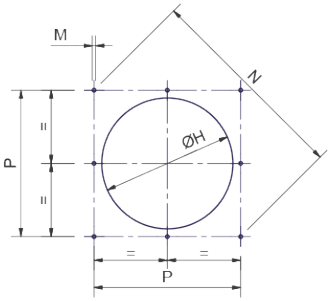

BOILER RECOMMENDED DRILLING TEMPLATE

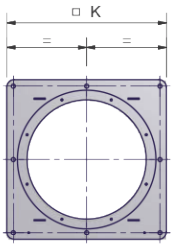

BURNER FLANGE

PACKAGING DIMENSIONS* (mm)

Type	l	p	h	kg
Q1300X	2.540	1.890	1.820	1.360
Q1520X	2.540	1.890	1.820	1.390

***VALORI INDICATIVI**

DIMENSIONS* (mm)

Type	Model	Overall dimensions																		
		AA	B BS	B BL	C	CC	D	F	G	H	J	K	L	M	N	P	U	V	W
Q1300X	M-.xx.S.IT.A.1.80	751	490	640	1700	711	2111	807	545	595	845	730	965	M16	948	670	1192	310	1338
Q1300X	M-.xx.S.IT.A.1.100	751	490	640	1700	711	2294	807	545	595	709	730	965	M16	948	670	1344	350	1338
Q1300X	M-.xx.S.IT.A.1.125	751	490	640	1700	711	2156	807	545	595	666	730	965	M16	948	670	1192	480	1338
Q1520X	M-.xx.S.IT.A.1.80	751	490	590	1688	711	2111	787	564	624	845	730	965	M16	948	670	1192	310	1338
Q1520X	M-.xx.S.IT.A.1.100	751	490	590	1688	711	2274	787	564	624	709	730	965	M16	948	670	1344	350	1338
Q1520X	M-.xx.S.IT.A.1.125	751	490	590	1688	711	2140	787	564	624	666	730	965	M16	948	670	1192	480	1338

*** The BS, BL, G, H dimensions must be confirmed from our DPT. INDICATIVE VALUES**

Attention: - The size of the gas train varies according to size and configuration.

ELECTRONIC OPERATION

Model	Gas train	Operation
M-.PR.S.IT.A.1.80.EA	DN80	PR
M-.PR.S.IT.A.1.100.EA	DN100	PR
M-.PR.S.IT.A.1.125.EA	DN125	PR
M-.MD.S.IT.A.1.80.ES	DN80	MD
M-.MD.S.IT.A.1.100.ES	DN100	MD
M-.MD.S.IT.A.1.125.ES	DN125	MD

SP = Standard blast tube + aluminum air intake (1)
SR = Standard blast tube + ABS polymer (silenced) air intake
LP = Extended blast tube + aluminum air intake
LR = Extended blast tube + ABS polymer (silenced) air intake (2)
PR = Progressive Adjustment
MD (*) = Modulating adjustment
(for the MD modulating version, the Modulation Kit must be added; see the list of variants)

Modulation kit = Kit to be combined with PR Progressive versions

In the MD modulating version, the burner must be equipped with the relevant modulating probe to complete the supply.

For LPG burners, see the list of variants

(1) For applications on furnaces and rotary drums, see the version with aluminium drawer (SP). Contact Cib Unigas for any clarification.

(2) For the following versions, please contact our offices.

The products comply with European standards EN676 and EN267 and the following directives:
DIRECTIVE GAR 2016/426/EU

NOx emission level:
- Class 3 (<80 mg/kWh) in gas operation according to EN676

For information on choosing the length of the blast tube, refer to the Technical Information booklet.

• STEEL SUPPORTING FRAME
INCLUDED (dimensions on page 41)

Burners also compatible with GPL, H_2

PERFORMANCE CURVES

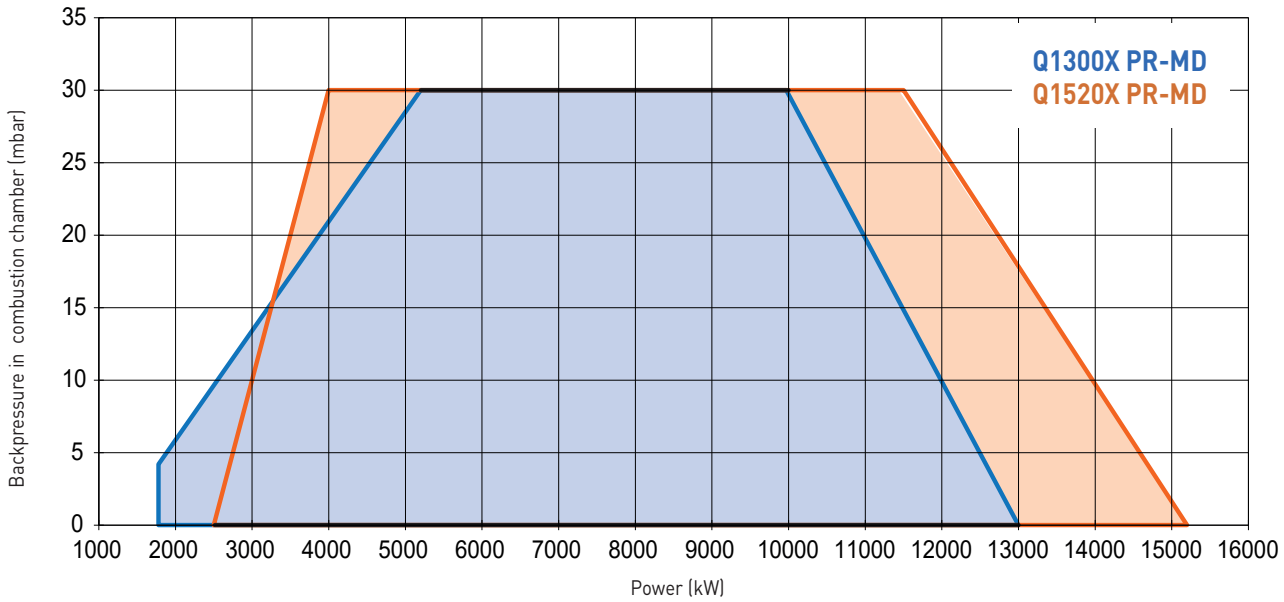

SERIES Q

PERFORMANCE CURVES

PRESSURE IN THE NETWORK

Q1300X PR-MD

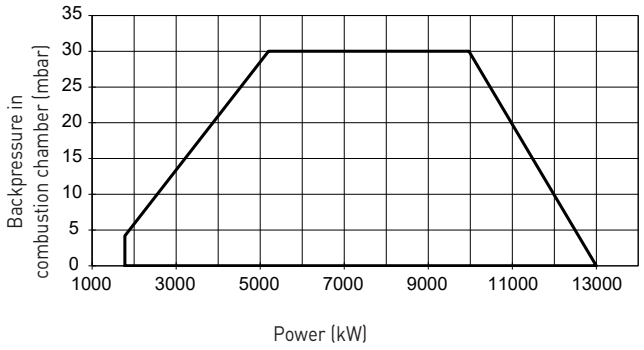

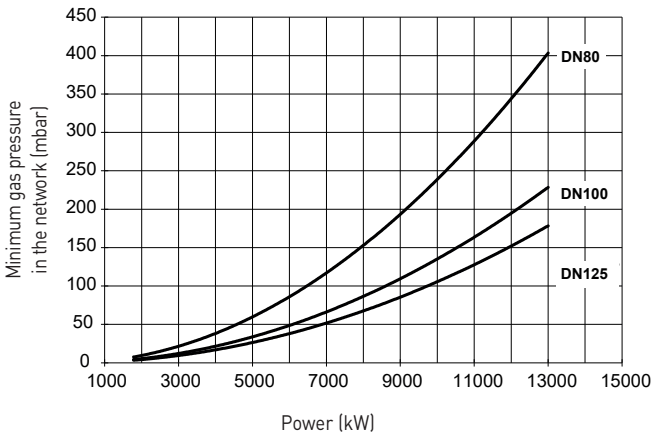

Q1520X PR-MD

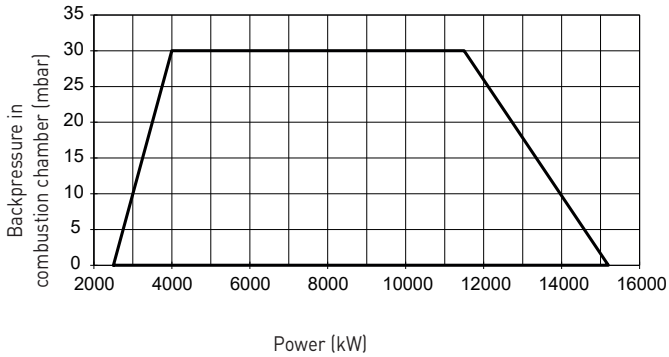

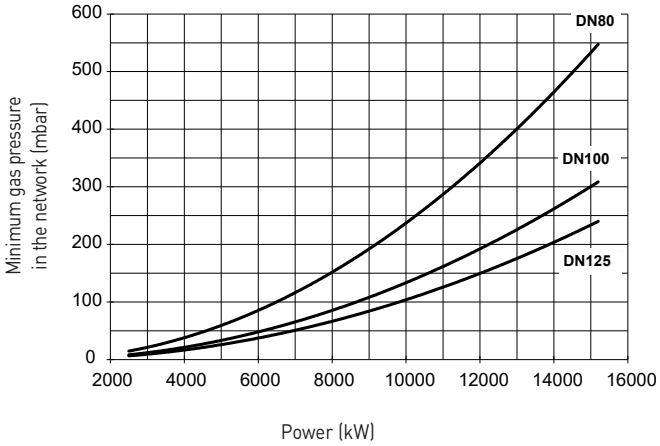

Attention:
- The working range values were determined with reference to laboratory tests with natural gas of lower calorific value Hi=34.02 MJ/Stm³ and density 0.714 kg/Stm³, (Stm³ refers to 1013 mbar and 15° C) and ambient conditions 1013 mbar and 20° C.
- To know the minimum gas pressure in the network, it is necessary to add the boiler back pressure to the value read on the curve.
- The pressure values vary depending on the configuration of the gas ramp. The minimum gas pressure curves refer to gas ramps assembled with standard supply valves.
- In the abscissa is the power value, in the ordinate the corresponding network pressure value net of the pressure in the combustion chamber. In order to know the mi nimum pressure at the ramp inlet, necessary to obtain the required gas flow, the pressure in the combustion chamber must be added to the value read on the ordinate.

HEAD X

Q1300X
Q1520X

Low NOx

- Low emissions (Class 3 - EN676)
- Possibility of working with innovative combustibles with low environmental impact such as
- Ample modulation range

GAS / LIGHT OIL

TECHNICAL SPECIFICATIONS

Type	Model	Power kW min	Power kW max	Power supply single-phase electricity auxiliary	Power supply three-phase electric motor	Fan motor kW	Pump motor kW	Gas connections	Level of noise emissions dBA
Q1300X	MG.xx.x.IT.A.1.xxx.xx	1.780	13.000	230 V 1N AC 50 Hz	400 V 3 AC 50 Hz	37,0	5,5	DN80 - DN100 - DN125	92,5
Q1520X	MG.xx.x.IT.A.1.xxx.xx	2.500	15.200	230 V 1N AC 50 Hz	400 V 3 AC 50 Hz	37,0	5,5	DN80 - DN100 - DN125	92,5

For information on choosing the length of the blast tube, refer to the Technical Information booklet.

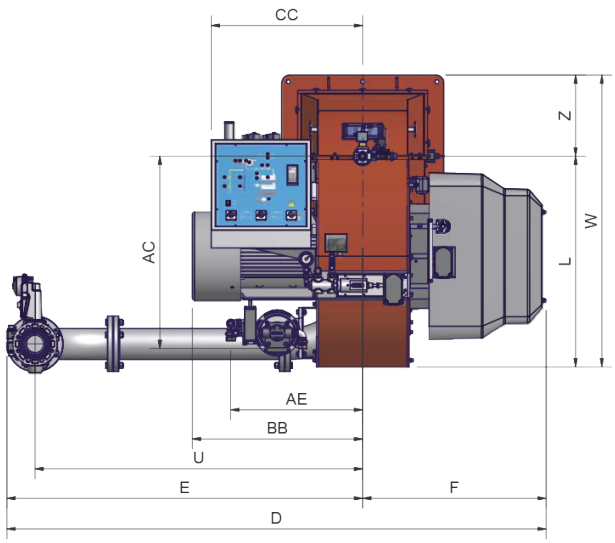

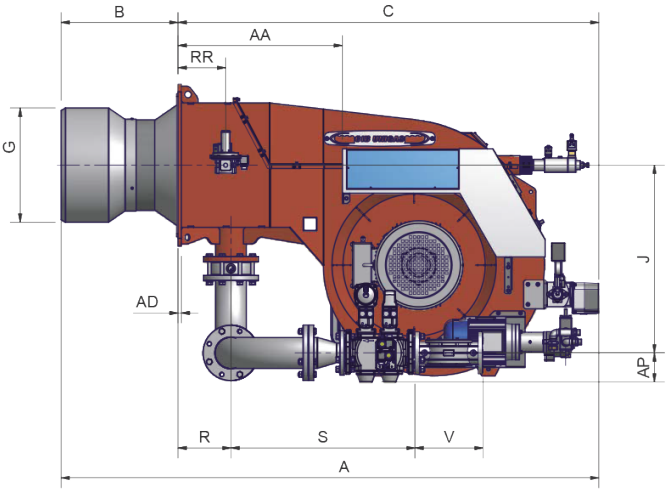

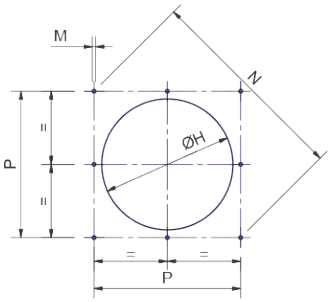

BOILER RECOMMENDED DRILLING TEMPLATE

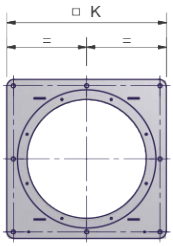

BURNER FLANGE

PACKAGING DIMENSIONS* (mm)

Type	l	p	h	kg
Q1300X	2.396	1.886	1.969	1.330
Q1520X	2.396	1.886	1.969	1.330

***INDICATIVE VALUES**

DIMENSIONS* (mm)

Type	Model	Overall dimensions																	
		AA	B BS	B BL	C	CC	D	F	G	H	J	K	L	M	N	P	U	V	W
Q1300X	MG.xx.x.IT.A.1.100.xx	751	490	640	1898	711	2294	807	545	595	709	730	965	M16	948	670	1344	350	1338
Q1300X	MG.xx.x.IT.A.1.125.xx	751	490	640	1898	711	2156	807	545	595	666	730	965	M16	948	670	1192	480	1338
Q1520X	MG.xx.x.IT.A.1.100.xx	751	490	590	1898	711	2274	787	564	624	709	730	965	M16	948	670	1344	350	1338
Q1520X	MG.xx.x.IT.A.1.125.xx	751	490	590	1898	711	2140	787	564	624	686	730	965	M16	948	670	1192	480	1338

*** The BS, BL, G, H dimensions must be confirmed from our DPT.**
INDICATIVE VALUES

Attention: - The size of the gas train varies according to size and configuration.

ELECTRONIC OPERATION

Model	Gas train	Operation
MG.PR.S.IT.A.1.80.EC	DN80	PR
MG.PR.S.IT.A.1.100.EC	DN100	PR
MG.PR.S.IT.A.1.125.EC	DN125	PR
MG.MD.S.IT.A.1.80.ES	DN80	MD
MG.MD.S.IT.A.1.100.ES	DN100	MD
MG.MD.S.IT.A.1.125.ES	DN125	MD

SP = Standard blast tube + aluminum air intake (1)
SR = Standard blast tube + ABS polymer (silenced) air intake
LP = Extended blast tube + aluminum air intake
LR = Extended blast tube + ABS polymer (silenced) air intake (2)
PR = Progressive Adjustment
MD (*) = Modulating adjustment
(for the MD modulating version, the Modulation Kit must be added; see the list of variants)

Modulation kit = Kit to be combined with PR Progressive versions

In the MD modulating version, the burner must be equipped with the relevant modulating probe to complete the supply.

For LPG burners, see the list of variants

(1) Per applicazioni su forni e tamburi rotanti vedere variante con cassetto in alluminio (SP). Contattare Cib Unigas per qualsiasi chiarimento.

(2) Per le seguenti versioni vi preghiamo di contattare i nostri uffici.

The products comply with European standards EN676 and EN267 and the following directives:
DIRECTIVE GAR 2016/426/EU
DIRECTIVE Low Tension 2014/35/UE
DIRECTIVE Electromagnetic compatibility 2014/30/UE
DIRECTIVE Machinery 2006/42/CE

NOx emission level:
- Class 3 (<80 mg/kWh) in gas operation according to EN676
- Class 2 (<185 mg/kWh) in gas operation according to EN676

For information on choosing the length of the blast tube, refer to the Technical Information booklet.

• STEEL SUPPORTING FRAME
INCLUDED (dimensions on page 41)

Burners also compatible with GPL, H_2
Burners also compatible with bio-oli

PERFORMANCE CURVES

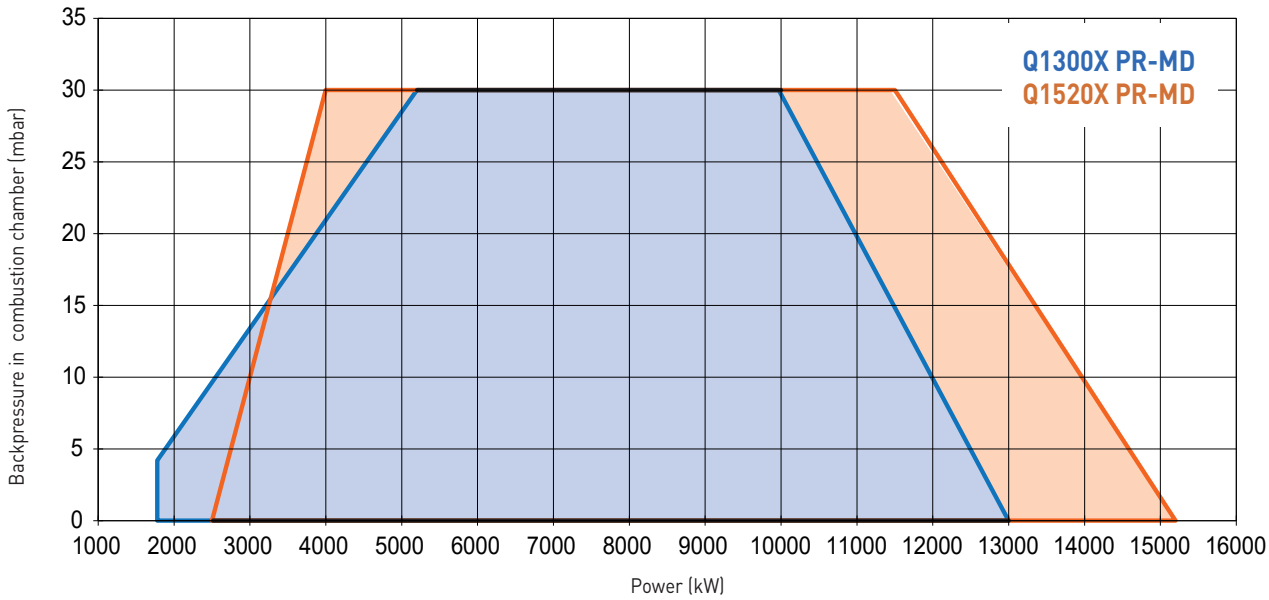

PERFORMANCE CURVES

PRESSURE IN THE NETWORK

Q1300X PR-MD

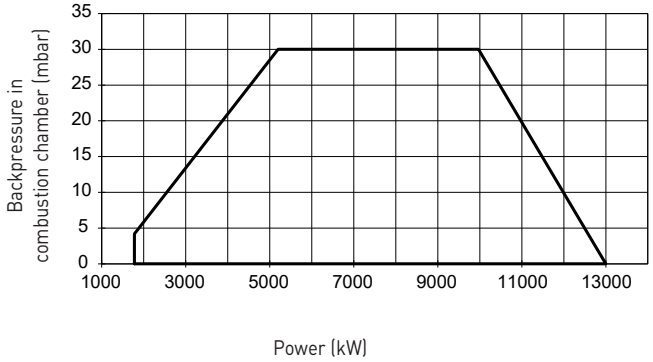

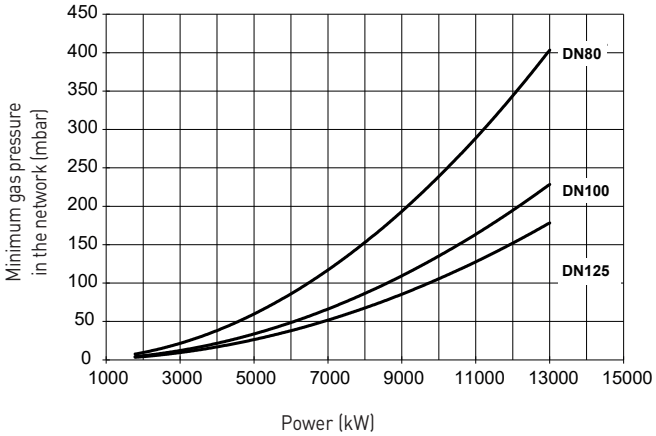

Q1520X PR-MD

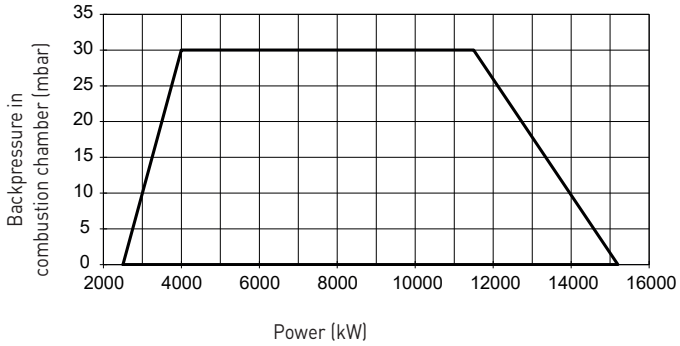

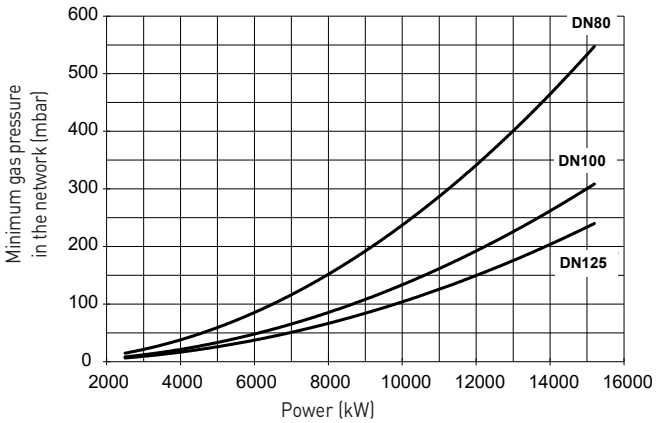

Attention:
- The working range values were determined with reference to laboratory tests with natural gas of lower calorific value Hi=34.02 MJ/Stm³ and density 0.714 kg/Stm³, (Stm³ refers to 1013 mbar and 15° C) and ambient conditions 1013 mbar and 20° C.
- To know the minimum gas pressure in the network, it is necessary to add the boiler back pressure to the value read on the curve.
- The pressure values vary depending on the configuration of the gas ramp. The minimum gas pressure curves refer to gas ramps assembled with standard supply valves.
- In the abscissa is the power value, in the ordinate the corresponding network pressure value net of the pressure in the combustion chamber. In order to know the mi nimum pressure at the ramp inlet, necessary to obtain the required gas flow, the pressure in the combustion chamber must be added to the value read on the ordinate.

HEAD V

Q1300V

Ultra Low NOx

Low emissions (Class 4 - EN676)

Wide modulation range

GAS

TECHNICAL SPECIFICATIONS

Type	Model	Power kW min	Power kW max	Power supply single-phase electricity auxiliary	Power supply three-phase electric motor	Fan motor kW	Gas connections	Level of noise emissions dBA
Q1300V	M-.xx.x.IT.A.1.xxx	2.540	14.463	230 V 1N AC 50 Hz	400 V 3 AC 50 Hz	37,0	DN80 - DN100 - DN125	92,5

For information on choosing the length of the blast tube, refer to the Technical Information booklet.

DIMENSIONS* (mm)

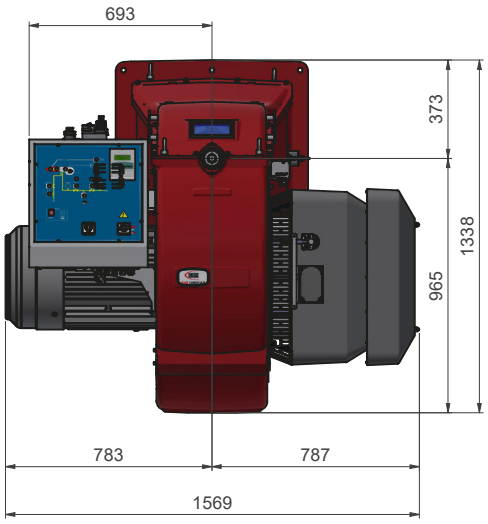

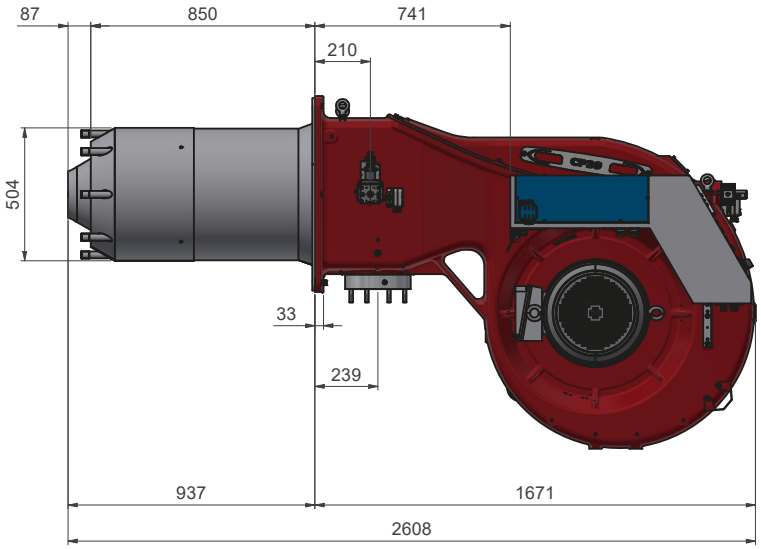

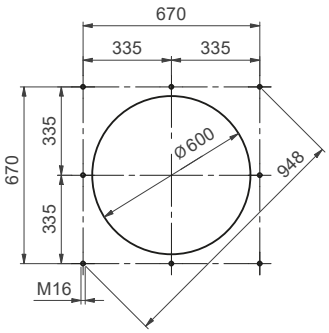

BOILER RECOMMENDED DRILLING TEMPLATE

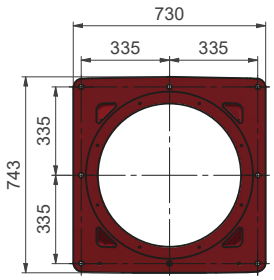

BURNER FLANGE

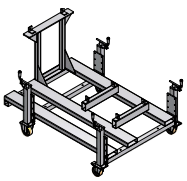

SUPPORTING FRAME

INCLUDED (dimensions on page 41)

Attention: - The size of the gas train varies according to size and configuration.

ELECTRONIC OPERATION

Model	Gas train	Operation
M-.PR.S.IT.A.1.80.EA	DN80	PR
M-.PR.S.IT.A.1.100.EA	DN100	PR
M-.PR.S.IT.A.1.125.EA	DN125	PR
M-.MD.S.IT.A.1.80.ES	DN80	MD
M-.MD.S.IT.A.1.100.ES	DN100	MD
M-.MD.S.IT.A.1.125.ES	DN125	MD

SP = Standard blast tube + aluminum air intake (1)
SR = Standard blast tube + ABS polymer (silenced) air intake
LP = Extended blast tube + aluminum air intake
LR = Extended blast tube + ABS polymer (silenced) air intake (2)
PR = Progressive Adjustment
MD (*) = Modulating adjustment
(for the MD modulating version, the Modulation Kit must be added; see the list of variants)

Modulation kit = Kit to be combined with PR Progressive versions

In the MD modulating version, the burner must be equipped with the relevant modulating probe to complete the supply.

For LPG burners, see the list of variants

(1) For applications on furnaces and rotary drums, see the version with aluminium drawer (SP). Contact Cib Unigas for any clarification.

(2) For the following versions, please contact our offices.

The products comply with European standards EN676 and EN267 and the following directives:
DIRECTIVE GAR 2016/426/EU

NOx emission level:
- Class 4 (<60 mg/kWh) in gas operation according to EN676

For information on choosing the length of the blast tube, refer to the Technical Information booklet.

Burners also compatible with GPL, H_2

PERFORMANCE CURVES

PRESSURE IN THE NETWORK

Q1300V PR-MD

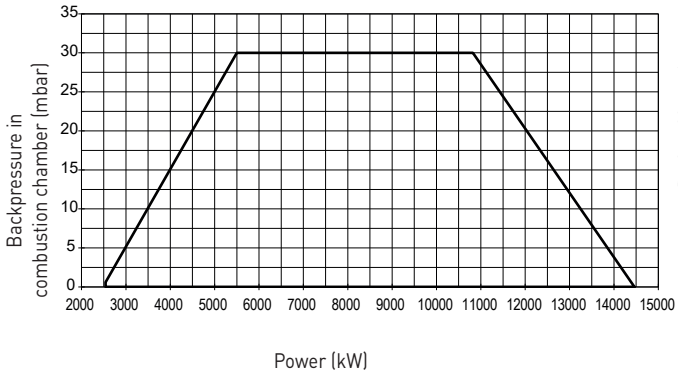

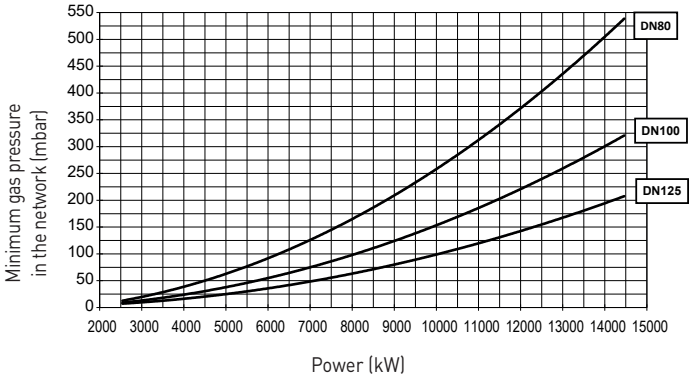

Attention:
- The working range values were determined with reference to laboratory tests with natural gas of lower calorific value Hi=34.02 MJ/Stm³ and density 0.714 kg/Stm³, (Stm³ refers to 1013 mbar and 15° C) and ambient conditions 1013 mbar and 20° C.
- To know the minimum gas pressure in the network, it is necessary to add the boiler back pressure to the value read on the curve.
- The pressure values vary depending on the configuration of the gas ramp. The minimum gas pressure curves refer to gas ramps assembled with standard supply valves.
- In the abscissa is the power value, in the ordinate the corresponding network pressure value net of the pressure in the combustion chamber. In order to know the mi nimum pressure at the ramp inlet, necessary to obtain the required gas flow, the pressure in the combustion chamber must be added to the value read on the ordinate.

HEAD A

Q1520A

Highly flexible burners

- Extensive flexibility
- Adjustment flexibility
- Possibility of working with all types of vacuum furnaces
- Many types of civil and industrial applications

GAS

TECHNICAL SPECIFICATIONS

Type	Model	Power kW min	Power kW max	Power supply single-phase electricity auxiliary	Power supply three-phase electric motor	Fan motor kW	Gas connections	Level of noise emissions dBA
Q1520A	M-.xx.S.IT.A.1.xxx.xx	2.500	15.200	230 V 1N AC 50 Hz	400 V 3 AC 50 Hz	37	DN80 - DN100 - DN125	92,5

For information on choosing the length of the blast tube, refer to the Technical Information booklet.

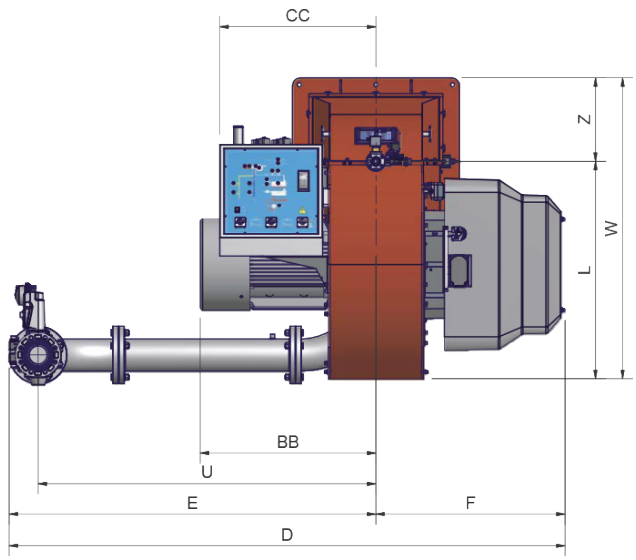

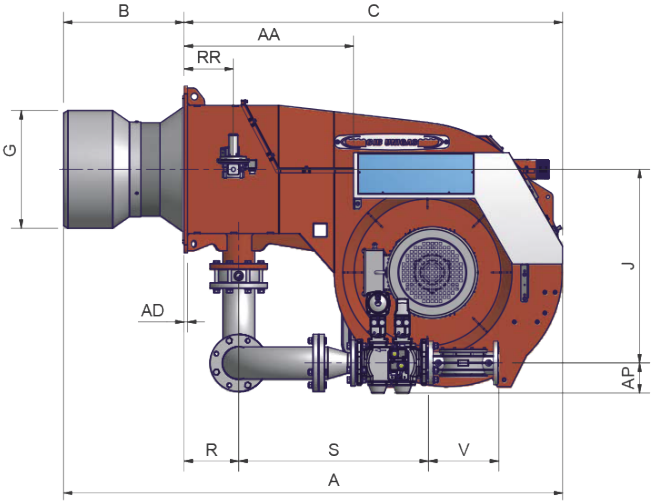

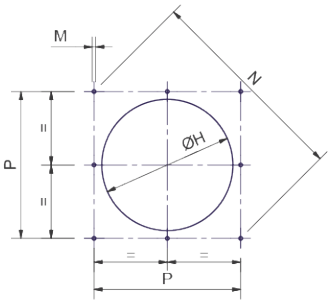

BOILER RECOMMENDED DRILLING TEMPLATE

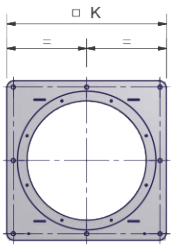

BURNER FLANGE

PACKAGING DIMENSIONS* (mm)

Type	l	p	h	kg
Q1520A	2396	1886	1969	1280

***INDICATIVE VALUES**

DIMENSIONS* (mm)

Type	Model	Overall dimensions																
		AA	B	C	CC	D	F	G	H	J	K	L	M	N	P	U	V	W
Q1520A	M-.xx.S.IT.A.1.80	751	517	1688	711	2111	787	548	598	845	730	965	M16	948	670	1192	310	1338
Q1520A	M-.xx.S.IT.A.1.100	751	517	1688	711	2274	787	548	598	709	730	965	M16	948	670	1344	350	1338
Q1520A	M-.xx.S.IT.A.1.125	751	517	1688	711	2140	787	548	598	666	730	965	M16	948	670	1192	480	1338

*** The B, H, G dimensions must be confirmed from our DPT. INDICATIVE VALUES**

Attention: - The size of the gas train varies according to size and configuration.

ELECTRONIC OPERATION

Model	Gas train	Operation
M-.PR.S.IT.A.1.80.EA	DN80	PR
M-.PR.S.IT.A.1.100.EA	DN100	PR
M-.PR.S.IT.A.1.125.EA	DN 125	PR
M-.MD.S.IT.A.1.80.ES	DN80	MD
M-.MD.S.IT.A.1.100.ES	DN100	MD
M-.MD.S.IT.A.1.125.ES	DN 125	MD

SP = Standard blast tube + aluminum air intake (1)
SR = Standard blast tube + ABS polymer (silenced) air intake
LP = Extended blast tube + aluminum air intake
LR = Extended blast tube + ABS polymer (silenced) air intake (2)
PR = Progressive Adjustment
MD (*) = Modulating adjustment
(for the MD modulating version, the Modulation Kit must be added; see the list of variants)

Modulation kit = Kit to be combined with PR Progressive versions

In the MD modulating version, the burner must be equipped with the relevant modulating probe to complete the supply.

For LPG burners, see the list of variants

(1) For applications on furnaces and rotary drums, see the version with aluminium drawer (SP). Contact Cib Unigas for any clarification.

(2) For the following versions, please contact our offices.

The products comply with European standards EN676 and EN267 and the following directives:
DIRECTIVE GAR 2016/426/EU

NOx emission level:
- Class 2 (<120 mg/kWh) in gas operation according to EN676

For information on choosing the length of the blast tube, refer to the Technical Information booklet.

Burners also compatible with GPL, biogas, syngas, off gas

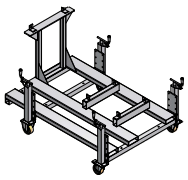

SUPPORTING FRAME

INCLUDED (dimensions on page 41)

PERFORMANCE CURVES

Q1520A PR-MD

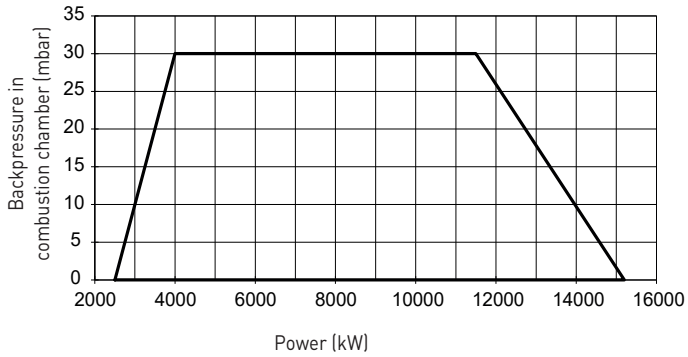

PRESSURE IN THE NETWORK

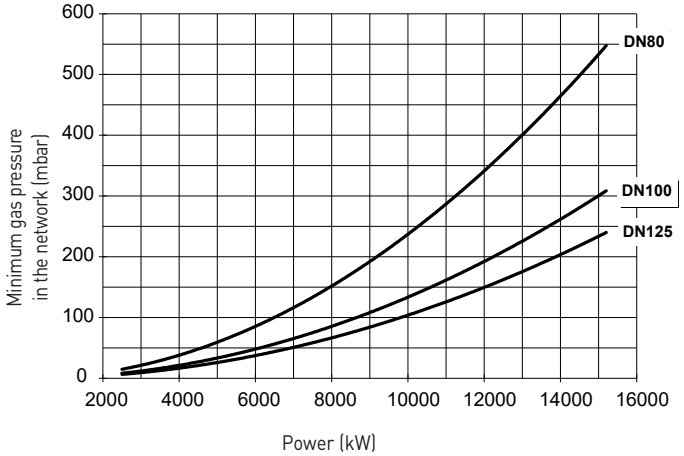

Attention:
- The working range values were determined with reference to laboratory tests with natural gas of lower calorific value Hi=34.02 MJ/Stm³ and density 0.714 kg/Stm³, (Stm³ refers to 1013 mbar and 15° C) and ambient conditions 1013 mbar and 20° C.
- To know the minimum gas pressure in the network, it is necessary to add the boiler back pressure to the value read on the curve.
- The pressure values vary depending on the configuration of the gas ramp. The minimum gas pressure curves refer to gas ramps assembled with standard supply valves.
- In the abscissa is the power value, in the ordinate the corresponding network pressure value net of the pressure in the combustion chamber. In order to know the mi nimum pressure at the ramp inlet, necessary to obtain the required gas flow, the pressure in the combustion chamber must be added to the value read on the ordinate.

HEAD A

Q1520A

Highly flexible burners

- Extensive flexibility
- Adjustment flexibility
- Possibility of working with all types of vacuum furnaces
- Many types of civil and industrial applications

GAS / LIGHT OIL

TECHNICAL SPECIFICATIONS

Type	Model	Power kW min	Power kW max	Power supply single-phase electricity auxiliary	Power supply three-phase electric motor	Fan motor kW	Pump motor kW	Gas connections	Level of noise emissions dBA
Q1520A	MG.xx.S.IT.A.1.xxx.xx	2.500	15.200	230 V 1N AC 50 Hz	400 V 3 AC 50 Hz	37	5,5	DN80 - DN100 - DN125	92,5

For information on choosing the length of the blast tube, refer to the Technical Information booklet.

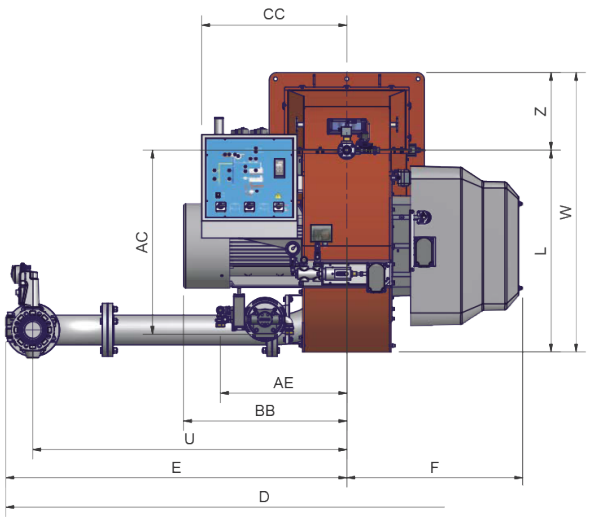

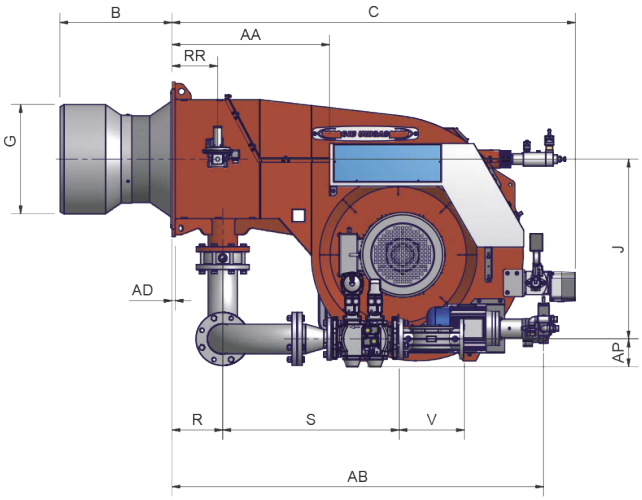

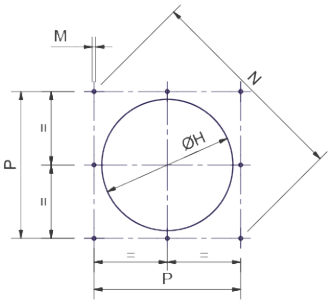

BOILER RECOMMENDED DRILLING TEMPLATE

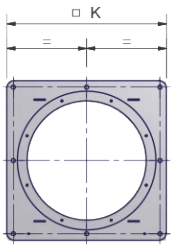

BURNER FLANGE

PACKAGING DIMENSIONS* (mm)

Type	l	p	h	kg
Q1520A	2.396	1.886	1.969	1.330

***INDICATIVE VALUES**

DIMENSIONS* (mm)

Type	Model	Overall dimensions A	B	C	CC	D	F	G	H	J	K	L	M	N	P	U	V	W
Q1520A	MG.xx.S.IT.A.1.80.xx	2180	517	1898	711	2111	787	548	598	845	730	965	M16	948	670	1192	310	1338
Q1520A	MG.xx.S.IT.A.1.100.xx	2180	517	1898	711	2274	787	548	598	709	730	965	M16	948	670	1344	350	1338
Q1520A	MG.xx.S.IT.A.1.125.xx	2180	517	1898	711	2140	787	548	598	666	730	965	M16	948	670	1192	480	1338

*** The B, H, G dimensions must be confirmed from our DPT. INDICATIVE VALUES**

Attention: - The size of the gas train varies according to size and configuration.

ELECTRONIC OPERATION

Model	Gas train	Operation
MG-.PR.S.IT.A.1.80.EC	DN80	PR
MG-.PR.S.IT.A.1.100.EC	DN100	PR
MG-.PR.S.IT.A.1.125.EC	DN 125	PR
MG-.MD.S.IT.A.1.80.ES	DN80	MD
MG-.MD.S.IT.A.1.100.ES	DN100	MD
MG-.MD.S.IT.A.1.125.ES	DN 125	MD

SP = Standard blast tube + aluminum air intake (1)
SR = Standard blast tube + ABS polymer (silenced) air intake
LP = Extended blast tube + aluminum air intake
LR = Extended blast tube + ABS polymer (silenced) air intake (2)
PR = Progressive Adjustment
MD (*) = Modulating adjustment
(for the MD modulating version, the Modulation Kit must be added; see the list of variants)

Modulation kit = Kit to be combined with PR Progressive versions

In the MD modulating version, the burner must be equipped with the relevant modulating probe to complete the supply.

For LPG burners, see the list of variants

(1) For applications on furnaces and rotary drums, see the version with aluminium drawer (SP). Contact Cib Unigas for any clarification.

(2) For the following versions, please contact our offices.

The products comply with European standards EN676 and EN267 and the following directives:
DIRECTIVE GAR 2016/426/EU
DIRECTIVE Low Tension 2014/35/UE
DIRECTIVE Electromagnetic compatibility 2014/30/UE
DIRECTIVE Machinery 2006/42/CE

NOx emission level:
- Class 2 (<120 mg/kWh) in gas operation according to EN676
- Class 1 (< 250 mg/kWh) in light oil operation according to EN267

For information on choosing the length of the blast tube, refer to the Technical Information booklet.

Burners also compatible with GPL, biogas, syngas, off gas, H_2

Burners also compatible with bio-oli

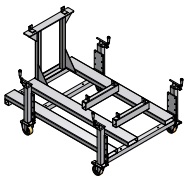

SUPPORTING FRAME

INCLUDED (dimensions on page 41)

PERFORMANCE CURVES

PRESSURE IN THE NETWORK

Q1520A PR-MD

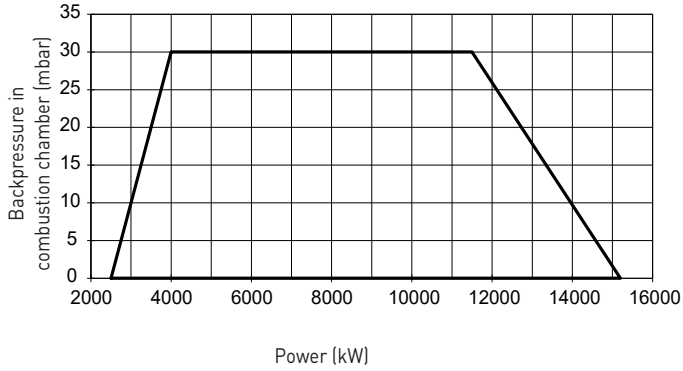

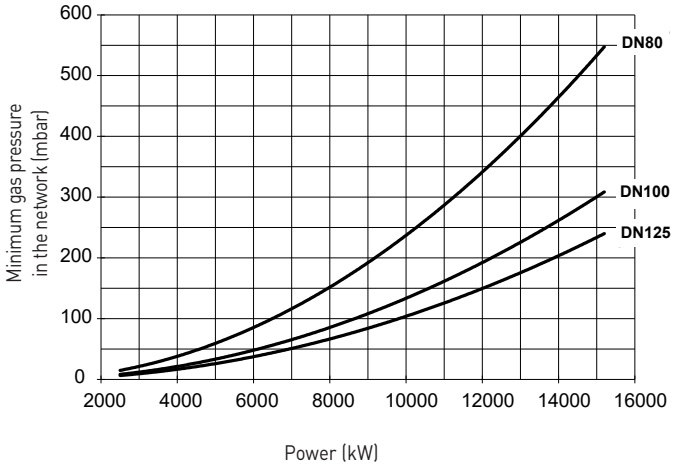

Attention:
- The working range values were determined with reference to laboratory tests with natural gas of lower calorific value Hi=34.02 MJ/Stm³ and density 0.714 kg/Stm³, (Stm³ refers to 1013 mbar and 15° C) and ambient conditions 1013 mbar and 20° C.
- To know the minimum gas pressure in the network, it is necessary to add the boiler back pressure to the value read on the curve.
- The pressure values vary depending on the configuration of the gas ramp. The minimum gas pressure curves refer to gas ramps assembled with standard supply valves.
- In the abscissa is the power value, in the ordinate the corresponding network pressure value net of the pressure in the combustion chamber. In order to know the mi nimum pressure at the ramp inlet, necessary to obtain the required gas flow, the pressure in the combustion chamber must be added to the value read on the ordinate.

HEAD P

Q1520P

High-power industrial applications

- Also available in duablok version (with separate fan)
- High reliability and robustness in industrial use
- For all special applications: including bio-oils
- Also suitable for waste fuels/recovered fuels

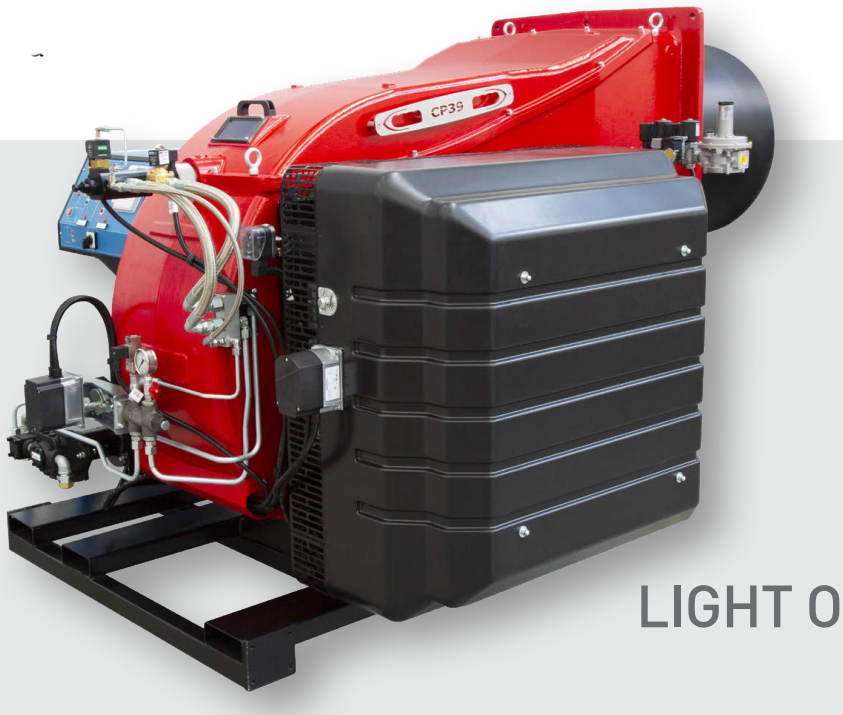

LIGHT OIL

HEAVY OIL

GAS / HEAVY OIL

TECHNICAL SPECIFICATIONS

Type	Model	Power kW min	Power kW max	Power supply single-phase electricity auxiliary	Power supply three-phase electric motor	Fan motor kW	Pump motor kW	Level of noise emissions dBA
Q1520P	G-.xx.x.IT.A	2.500	15.200	230 V 1N AC 50 Hz	400 V 3 AC 50 Hz	37	5,5	92,5

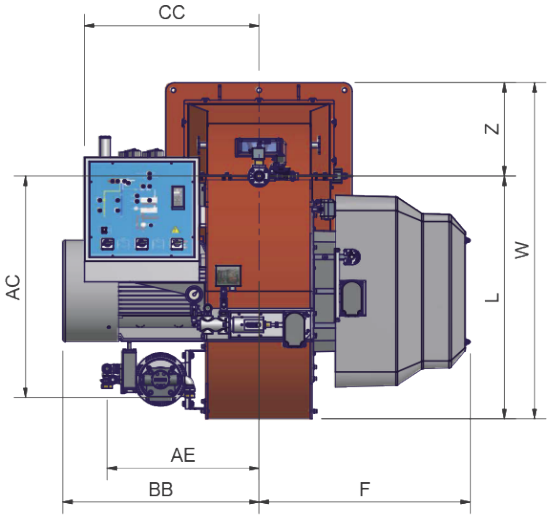

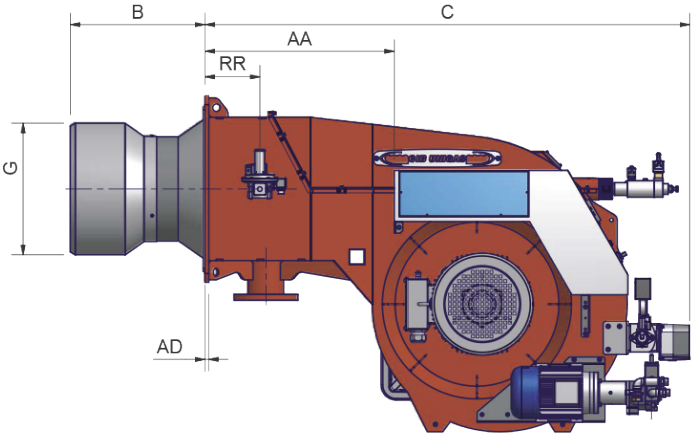

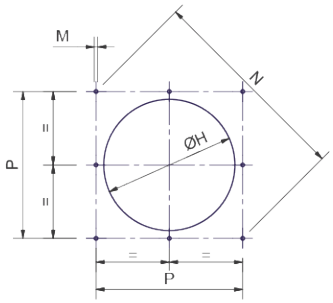

BOILER RECOMMENDED DRILLING TEMPLATE

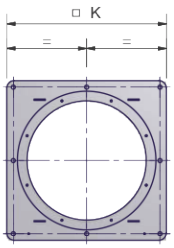

BURNER FLANGE

PACKAGING DIMENSIONS* (mm)

Type	l	p	h	kg
Q1520P	2396	1886	1969	1290

***INDICATIVE VALUES**

DIMENSIONS* (mm)

Type	Model	Overall dimensions													
		AA	B	C	CC	F	G	H	K	L	M	N	P	W	Z
Q1520P	G.xx.IT.A.xx	741	*	1898	735	827	*	*	730	949	M16	948	670	1314	365

*** The B, H, G dimensions must be confirmed from our DPT.**
INDICATIVE VALUES

Attention: - The size of the gas train varies according to size and configuration.

ELECTRONIC OPERATION

Model	Operation
G-.PR.S.IT.A.EA	PR
G-.MD.S.IT.A.ES	MD

SP = Standard blast tube + aluminum air intake (1)
SR = Standard blast tube + ABS polymer (silenced) air intake
LP = Extended blast tube + aluminum air intake
LR = Extended blast tube + ABS polymer (silenced) air intake (2)
PR = Progressive Adjustment
MD (*) = Modulating adjustment
(for the MD modulating version, the Modulation Kit must be added; see the list of variants)

Modulation kit = Kit to be combined with PR Progressive versions

In the MD modulating version, the burner must be equipped with the relevant modulating probe to complete the supply.

Burners also compatible with bio-oli

(1) For applications on furnaces and rotary drums, see the version with aluminium drawer (SP). Contact Cib Unigas for any clarification.

The products comply with European standards EN676 and EN267 and the following directives:
DIRECTIVE Low Tension 2014/35/UE
DIRECTIVE Electromagnetic compatibility 2014/30/UE
DIRECTIVE Machinery 2006/42/CE

For information on choosing the length of the blast tube, refer to the Technical Information booklet.

• STEEL SUPPORTING FRAME
INCLUDED (dimensions on page 41)

PERFORMANCE CURVES

Q1520A PR-MD

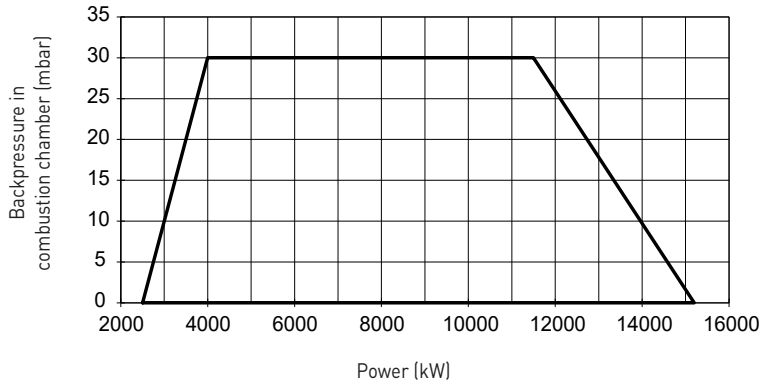

Attention:
- The working range values were determined with reference to laboratory tests with natural gas of lower calorific value Hi=34.02 MJ/Stm³ and density 0.714 kg/Stm³, (Stm³ refers to 1013 mbar and 15° C) and ambient conditions 1013 mbar and 20° C.
- To know the minimum gas pressure in the network, it is necessary to add the boiler back pressure to the value read on the curve.
- The pressure values vary depending on the configuration of the gas ramp. The minimum gas pressure curves refer to gas ramps assembled with standard supply valves.
- In the abscissa is the power value, in the ordinate the corresponding network pressure value net of the pressure in the combustion chamber. In order to know the mi nimum pressure at the ramp inlet, necessary to obtain the required gas flow, the pressure in the combustion chamber must be added to the value read on the ordinate.

MECHANICAL ATOMIZATION viscosity 400 cSt at 50°C (50°E at 50°C)

TECHNICAL SPECIFICATIONS

Type	Model	Power kW min	max	Power supply single-phase electricity auxiliary	Power supply three-phase electric motor	Fan motor kW	Pump motor kW	Resistor kW	Level of noise emissions dBA
Q1520P	x-.xx.S.IT.A	2.500	15.200	230 V 1N AC 50 Hz	400 V 3 AC 50 Hz	37	5,5	24+24	92,5

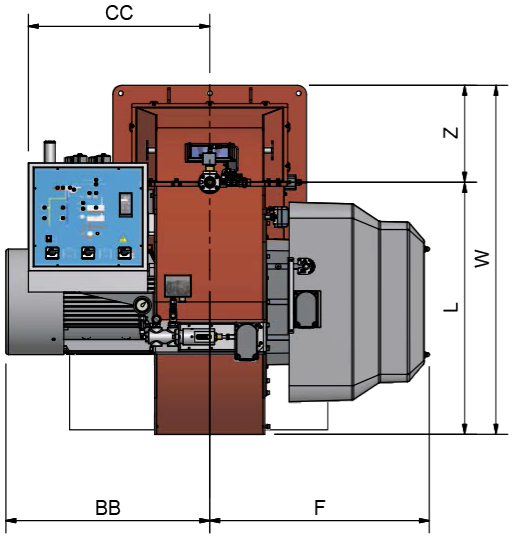

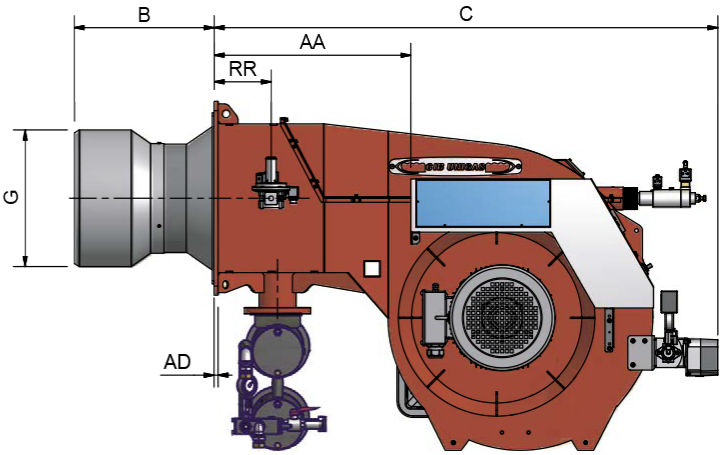

Low pressure pump set (pump, motor and filter) is included, but supplied loose (not assembled on the burner).

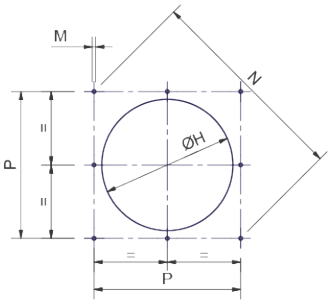

BOILER RECOMMENDED DRILLING TEMPLATE

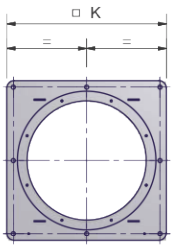

BURNER FLANGE

Boiler drilling drill must be confirmed according the firing head

PACKAGING DIMENSIONS* (mm)

Type	l	p	h	kg
Q1520P	2.396	1.886	1.969	1.390

***INDICATIVE VALUES**

DIMENSIONS* (mm)

Type	Model	Overall dimensions												
		AA	B	C	CC	F	G	H	K	L	M	N	P	W
Q1520P	x.xx.S.IT.A.xx	741	*	1898	735	827	*	*	730	949	M16	948	670	1314

*** The B, H, G dimensions must be confirmed from our DPT. INDICATIVE VALUES**

Attention: - The size of the gas train varies according to size and configuration.

ELECTRONIC OPERATION

Model	Operation
HEAVY OIL 400 cSt at 50°C (50°E at 50°C)	
D-.PR.S.IT.A.EA	PR
D-.MD.S.IT.A.ES	MD

SP = Standard blast tube + aluminum air intake (1)
SR = Standard blast tube + ABS polymer (silenced) air intake
LP = Extended blast tube + aluminum air intake
LR = Extended blast tube + ABS polymer (silenced) air intake (2)
PR = Progressive Adjustment
MD (*) = Modulating adjustment
(for the MD modulating version, the Modulation Kit must be added; see the list of variants)

Modulation kit = Kit to be combined with PR Progressive versions

In the MD modulating version, the burner must be equipped with the relevant modulating probe to complete the supply.

Burners also compatible with bio-oli

(2) For the following versions, please contact our offices.

The products comply with European standards EN676 and EN267 and the following directives:
DIRECTIVE Low Tension 2014/35/UE
DIRECTIVE Electromagnetic compatibility 2014/30/UE
DIRECTIVE Machinery 2006/42/CE

For information on choosing the length of the blast tube, refer to the Technical Information booklet.

- OIL PUMP IN A SEPARATE SUPPORT

(to see on pag. 41)

- STEEL SUPPORTING FRAME

INCLUDED (dimensions on page 41)

PERFORMANCE CURVES

Q1520A PR-MD

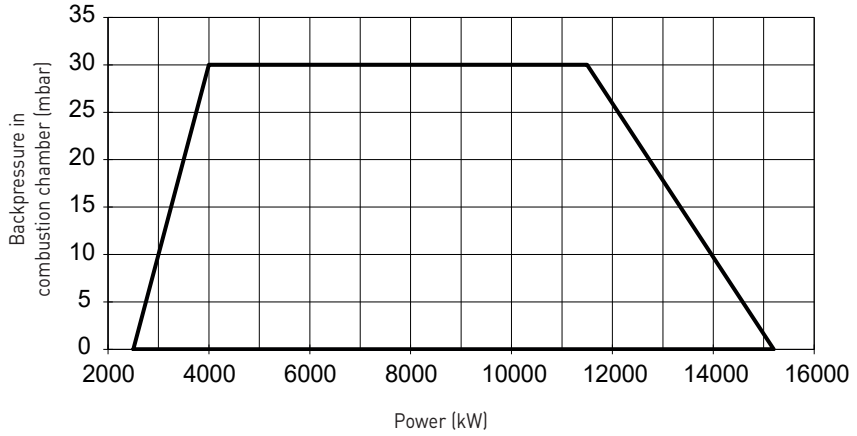

Attention:
- The working range values were determined with reference to laboratory tests with natural gas of lower calorific value Hi=34.02 MJ/Stm³ and density 0.714 kg/Stm³, (Stm³ refers to 1013 mbar and 15° C) and ambient conditions 1013 mbar and 20° C.
- To know the minimum gas pressure in the network, it is necessary to add the boiler back pressure to the value read on the curve.
- The pressure values vary depending on the configuration of the gas ramp. The minimum gas pressure curves refer to gas ramps assembled with standard supply valves.
- In the abscissa is the power value, in the ordinate the corresponding network pressure value net of the pressure in the combustion chamber. In order to know the mi nimum pressure at the ramp inlet, necessary to obtain the required gas flow, the pressure in the combustion chamber must be added to the value read on the ordinate.

MECHANICAL ATOMIZATION viscosity 400 cSt at 50°C (50°E at 50°C)

TECHNICAL SPECIFICATIONS

Type	Model	Power kW min	Power kW max	Power supply single-phase electricity auxiliary	Power supply three-phase electric motor	Fan motor kW	Pump motor kW	Resistor kW	Gas connections	Level of noise emissions dBA
Q1520P	MN.xx.S.IT.A.1.xxx.xx	2.500	15.200	230 V 1N AC 50 Hz	400 V 3 AC 50 Hz	37	5,5	24+24	DN80 - DN100 - DN125	92,5

For information on choosing the length of the blast tube, refer to the Technical Information booklet.

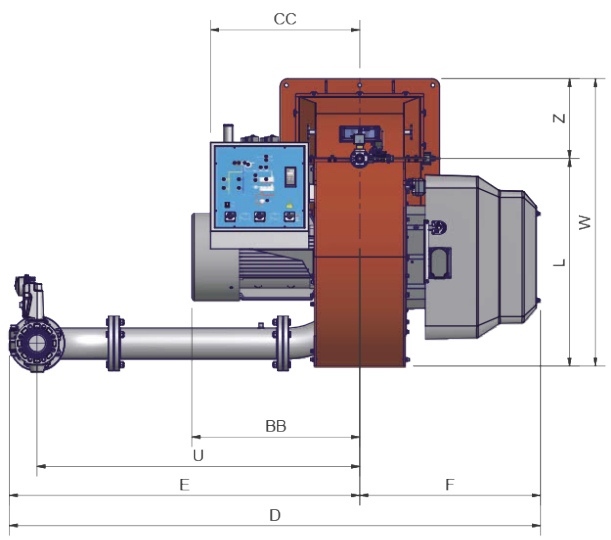

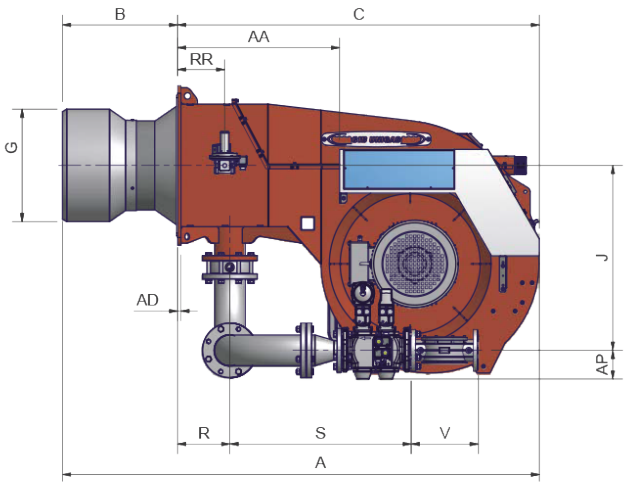

Low pressure pump set (pump, motor and filter) is included, but supplied loose (not assembled on the burner).

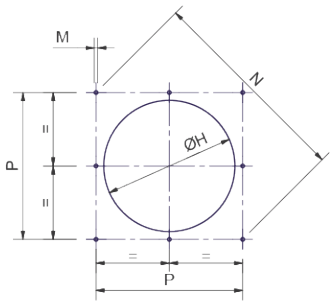

BOILER RECOMMENDED DRILLING TEMPLATE

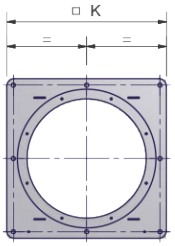

BURNER FLANGE

PACKAGING DIMENSIONS* (mm)

Type	l	p	h	kg
	2.396	1.886	1.969	1.430

***INDICATIVE VALUES**

DIMENSIONS* (mm)

Type	Model	Overall dimensions																
		AA	B	C	CC	D	F	G	H	J	K	L	M	N	P	U	V	W
Q1520P	Mx.xx.S.IT.A.1.80.xx	741	*	1898	735	2431	827	*	*	845	730	949	M16	948	670	1477	310	1314
Q1520P	Mx.xx.S.IT.A.1.100.xx	741	*	1898	735	2447	827	*	*	845	730	949	M16	948	670	1477	350	1314
Q1520P	Mx.xx.S.IT.A.1.125.xx	741	*	1898	735	2465	827	*	*	845	730	949	M16	948	670	1477	480	1314

*** The B, H, G dimensions must be confirmed from our DPT. INDICATIVE VALUES**

Attention: - The size of the gas train varies according to size and configuration.

ELECTRONIC OPERATION

Model	Gas train	Operation
OLIO COMBUSTIBILE 50 cSt a 50°C (7°E a 50°C)		
MD-.PR.S.IT.A.1.80.EC	DN80	PR
MD-.PR.S.IT.A.1.100.EC	DN100	PR
MD-.PR.S.IT.A.1.125.EC	DN125	PR
MD-.MD.S.IT.A.1.80.ES	DN80	MD
MD-.MD.S.IT.A.1.100.ES	DN100	MD
MD-.MD.S.IT.A.1.125.ES	DN125	MD

The products comply with European standards EN676 and EN267 and the following directives:
DIRECTIVE GAR 2016/426/EU
DIRECTIVE Low Tension 2014/35/UE
DIRECTIVE Electromagnetic compatibility 2014/30/UE
DIRECTIVE Machinery 2006/42/CE

SP = Standard blast tube + aluminum air intake (1)
SR = Standard blast tube + ABS polymer (silenced) air intake
LP = Extended blast tube + aluminum air intake
LR = Extended blast tube + ABS polymer (silenced) air intake (2)
PR = Progressive Adjustment
MD (*) = Modulating adjustment
(for the MD modulating version, the Modulation Kit must be added; see the list of variants)

Modulation kit = Kit to be combined with PR Progressive versions

In the MD modulating version, the burner must be equipped with the relevant modulating probe to complete the supply.

For LPG burners, see the list of variants

(1) For applications on furnaces and rotary drums, see the version with aluminium drawer (SP). Contact Cib Unigas for any clarification.

(2) For the following versions, please contact our offices.

- OIL PUMP IN A SEPARATE SUPPORT

(to see on pag. 41)

- STEEL SUPPORTING FRAME

INCLUDED (dimensions on page 41)

For information on choosing the length of the blast tube, refer to the Technical Information booklet.

Burners also compatible with GPL, biogas, syngas, off gas

Burners also compatible with bio-oli

PERFORMANCE CURVES

PRESSURE IN THE NETWORK

Q1520A PR-MD

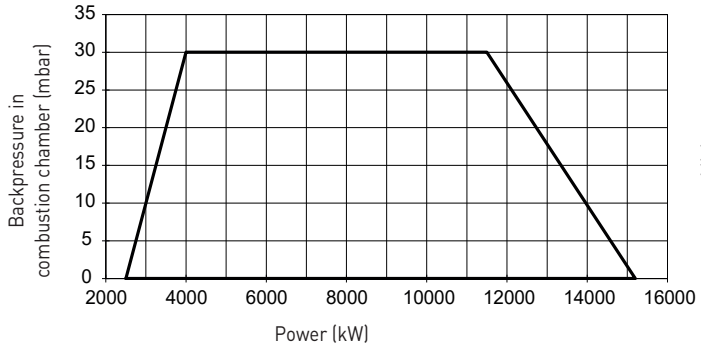

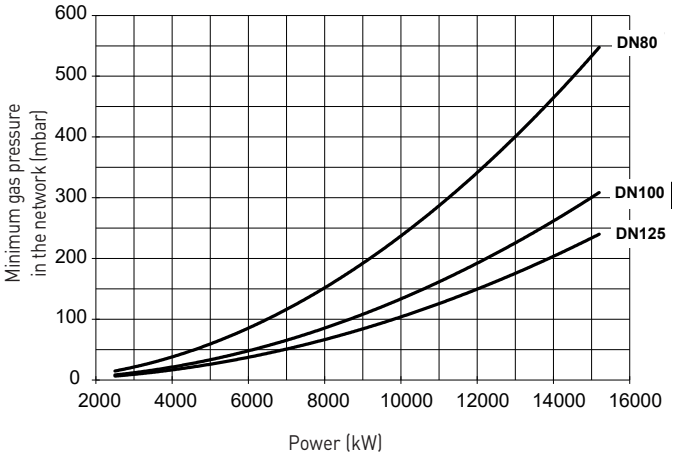

Attention:
- The working range values were determined with reference to laboratory tests with natural gas of lower calorific value Hi=34.02 MJ/Stm³ and density 0.714 kg/Stm³, (Stm³ refers to 1013 mbar and 15° C) and ambient conditions 1013 mbar and 20° C.
- To know the minimum gas pressure in the network, it is necessary to add the boiler back pressure to the value read on the curve.
- The pressure values vary depending on the configuration of the gas ramp. The minimum gas pressure curves refer to gas ramps assembled with standard supply valves.
- In the abscissa is the power value, in the ordinate the corresponding network pressure value net of the pressure in the combustion chamber. In order to know the mi nimum pressure at the ramp inlet, necessary to obtain the required gas flow, the pressure in the combustion chamber must be added to the value read on the ordinate.

HEAD Y

Q1520Y

High-power industrial applications

- Also for dual-block burners with a high power range
- High reliability and robustness in industrial use
- For all special applications: from the use of the crudest oil to dense fuels, for clean and efficient combustion.
- Also recovered fuels, combustion waste (sin gas, off gas). In addition, coal gas, lean gas and even waste fuel (production waste fuels).

HEAVY OIL

GAS / HEAVY OIL

HEAD Y
HEAVY OIL

SERIES Q

PNEUMATIC ATOMIZATION WITH ELECTRONIC OPERATION
Viscosity 4000 cSt at 50°C (530°E at 50°C)

TECHNICAL SPECIFICATIONS

Type	Model	Power kW min	Power kW max	Power supply single-phase electricity auxiliary	Power supply three-phase electric motor	Fan motor kW	Pump motor kW	Resistor kW	Level of noise emissions dBA
Q1520Y	H-.xx.S.IT.A.xx	2.500	15.200	230 V 1N AC 50 Hz	400 V 3 AC 50 Hz	37	1,1	24+24	92,5

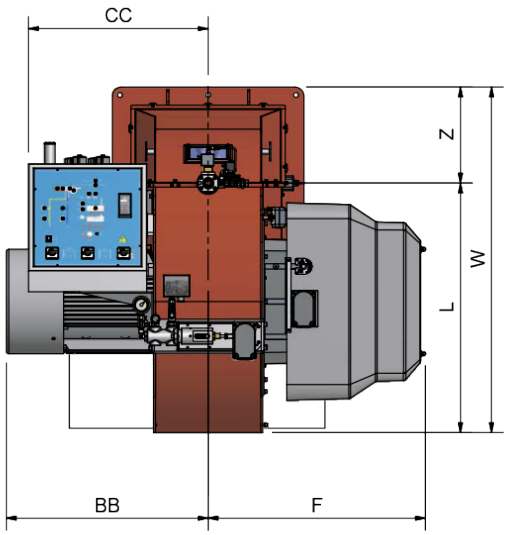

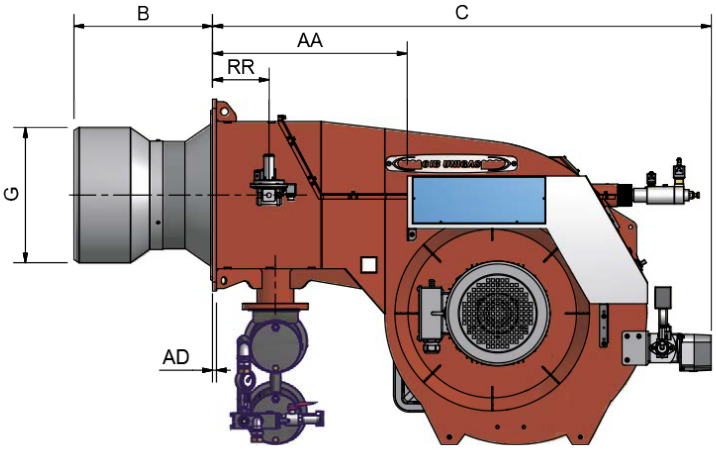

Low pressure pump set (pump, motor and filter) is included, but supplied loose (not assembled on the burner).

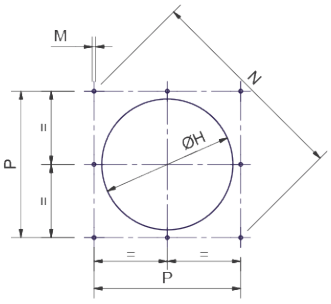

BOILER RECOMMENDED DRILLING TEMPLATE

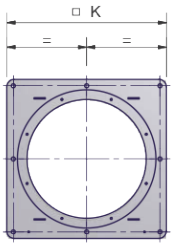

BURNER FLANGE

Boiler drilling drill must be confirmed according the firing head

PACKAGING DIMENSIONS* (mm)

Type	l	p	h	kg
Q1520Y	2.396	1.886	1.969	1.370

***INDICATIVE VALUES**

DIMENSIONS* (mm)

Type	Model	Overall dimensions AA	B	C	CC	F	G	H	K	L	M	N	P	W
Q1520Y	H.xx.S.IT.A.xx	741	*	1898	735	827	*	*	730	949	M16	948	670	1314

*** The B, H, G dimensions must be confirmed from our DPT.**
INDICATIVE VALUES

Attention: - The size of the gas train varies according to size and configuration.

ELECTRONIC OPERATION

Model	Operation
HEAVY OIL 4000 cSt at 50°C (530°E at 50°C)	
H-.PR.S.IT.A.EA	PR
H-.MD.S.IT.A.ES	MD

SP = Standard blast tube + aluminum air intake (1)
SR = Standard blast tube + ABS polymer (silenced) air intake
LP = Extended blast tube + aluminum air intake
LR = Extended blast tube + ABS polymer (silenced) air intake (2)
PR = Progressive Adjustment
MD (*) = Modulating adjustment
(for the MD modulating version, the Modulation Kit must be added; see the list of variants)

Modulation kit = Kit to be combined with PR Progressive versions

In the MD modulating version, the burner must be equipped with the relevant modulating probe to complete the supply.

Burners also compatible with bio-oli

(1) For applications on furnaces and rotary drums, see the version wit aluminium drawer (SP). Contact Cib Unigas for any clarification.

(2) For the following versions, please contact our offices.

The products comply with European standards EN676 and EN267 and the following directives:
DIRECTIVE Low Tension 2014/35/UE
DIRECTIVE Electromagnetic compatibility 2014/30/UE
DIRECTIVE Machinery 2006/42/CE

For information on choosing the length of the blast tube, refer to the Technical Information booklet.

- OIL PUMP IN A SEPARATE SUPPORT

(to see on pag. 41)

- STEEL SUPPORTING FRAME

INCLUDED (dimensions on page 41)

PERFORMANCE CURVES

Q1520A PR-MD

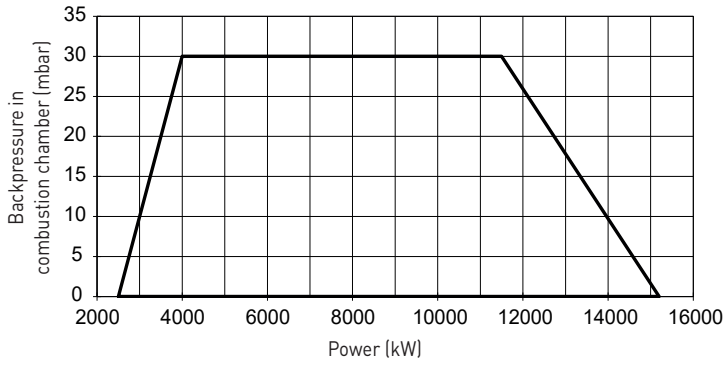

Attention:
- The working range values were determined with reference to laboratory tests with natural gas of lower calorific value Hi=34.02 MJ/Stm³ and density 0.714 kg/Stm³, (Stm³ refers to 1013 mbar and 15° C) and ambient conditions 1013 mbar and 20° C.
- To know the minimum gas pressure in the network, it is necessary to add the boiler back pressure to the value read on the curve.
- The pressure values vary depending on the configuration of the gas ramp. The minimum gas pressure curves refer to gas ramps assembled with standard supply valves.
- In the abscissa is the power value, in the ordinate the corresponding network pressure value net of the pressure in the combustion chamber. In order to know the mi nimum pressure at the ramp inlet, necessary to obtain the required gas flow, the pressure in the combustion chamber must be added to the value read on the ordinate.

HEAD Y
GAS / HEAVY OIL

SERIES Q

PNEUMATIC ATOMIZATION WITH ELECTRONIC OPERATION
Viscosity 4000 cSt at 50°C (530°E at 50°C)

TECHNICAL SPECIFICATIONS

Type	Model	Power kW min	Power kW max	Power supply single-phase electricity auxiliary	Power supply three-phase electric motor	Fan motor kW	Pump motor kW	Resistor kW	Gas connections	Level of noise emissions dBA
Q1520Y	MH.xx.S.IT.A.1.xxx.xx	2.500	15.200	230 V 1N AC 50 Hz	400 V 3 AC 50 Hz	37	1,1	24+24	DN80 - DN100 - DN125	92,5

For information on choosing the length of the blast tube, refer to the Technical Information booklet.

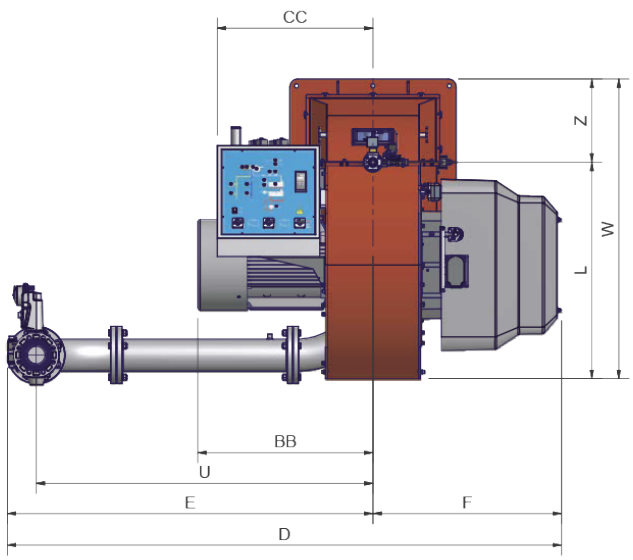

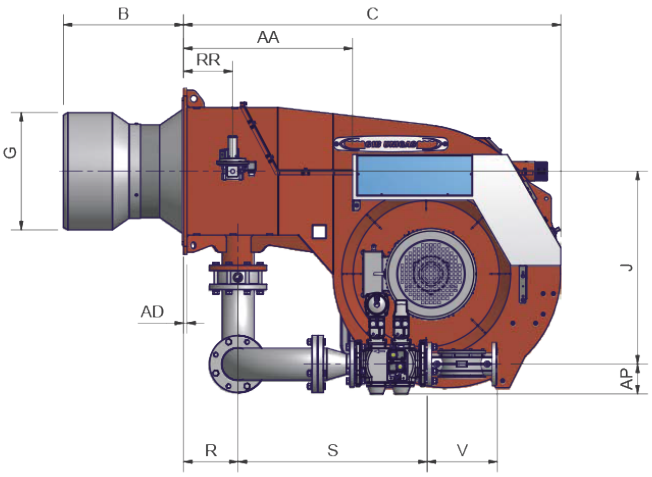

Low pressure pump set (pump, motor and filter) is included, but supplied loose (not assembled on the burner).

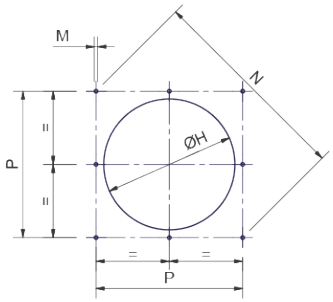

BOILER RECOMMENDED DRILLING TEMPLATE

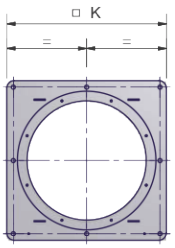

BURNER FLANGE

PACKAGING DIMENSIONS* (mm)

Type	l	p	h	kg
Q1520Y	2.396	1.886	1.969	1.430

***INDICATIVE VALUES**

DIMENSIONS* (mm)

Type	Model	Overall dimensions AA	B	C	CC	D	F	G	H	J	K	L	M	N	P	U	V	W
Q1520Y	MH.xx.S.IT.A.1.80.xx	741	*	1898	735	2431	827	*	*	845	730	949	M16	948	670	1477	310	1314
Q1520Y	MH.xx.S.IT.A.1.100.xx	741	*	1898	735	2447	827	*	*	845	730	949	M16	948	670	1477	350	1314
Q1520Y	MH.xx.S.IT.A.1.125.xx	741	*	1898	735	2465	827	*	*	845	730	949	M16	948	670	1477	480	1314

*** The B, H, G dimensions must be confirmed from our DPT.**
INDICATIVE VALUES

Attention: - The size of the gas train varies according to size and configuration.

ELECTRONIC OPERATION

Model	Gas train	Operation
HEAVY OIL 50 cSt at 50°C (7°E at 50°C)		
MH-.PR.S.IT.A.1.80.EC	DN80	PR
MH-.PR.S.IT.A.1.100.EC	DN100	PR
MH-.PR.S.IT.A.1.125.EC	DN125	PR
MH-.MD.S.IT.A.1.80.ES	DN80	MD
MH-.MD.S.IT.A.1.100.ES	DN100	MD
MH-.MD.S.IT.A.1.125.ES	DN125	MD

The products comply with European standards EN676 and EN267 and the following directives:
DIRECTIVE GAR 2016/426/EU
DIRECTIVE Low Tension 2014/35/UE
DIRECTIVE Electromagnetic compatibility 2014/30/UE
DIRECTIVE Machinery 2006/42/CE

SP = Standard blast tube + aluminum air intake (1)
SR = Standard blast tube + ABS polymer (silenced) air intake
LP = Extended blast tube + aluminum air intake
LR = Extended blast tube + ABS polymer (silenced) air intake (2)
PR = Progressive Adjustment
MD (*) = Modulating adjustment
(for the MD modulating version, the Modulation Kit must be added; see the list of variants)

Modulation kit = Kit to be combined with PR Progressive versions

In the MD modulating version, the burner must be equipped with the relevant modulating probe to complete the supply.

For LPG burners, see the list of variants

(1) For applications on furnaces and rotary drums, see the version with aluminium drawer (SP). Contact Cib Unigas for any clarification.

(2) For the following versions, please contact our offices.

- OIL PUMP IN A SEPARATE SUPPORT

(to see on pag. 41)

- STEEL SUPPORTING FRAME

INCLUDED (dimensions on page 41)

For information on choosing the length of the blast tube, refer to the Technical Information booklet.

Burners also compatible with GPL, biogas, syngas, off gas

Burners also compatible with bio-oli

PERFORMANCE CURVES

PRESSURE IN THE NETWORK

Q1520A PR-MD

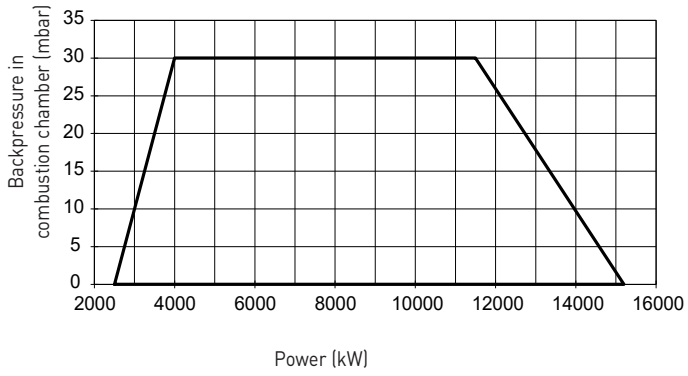

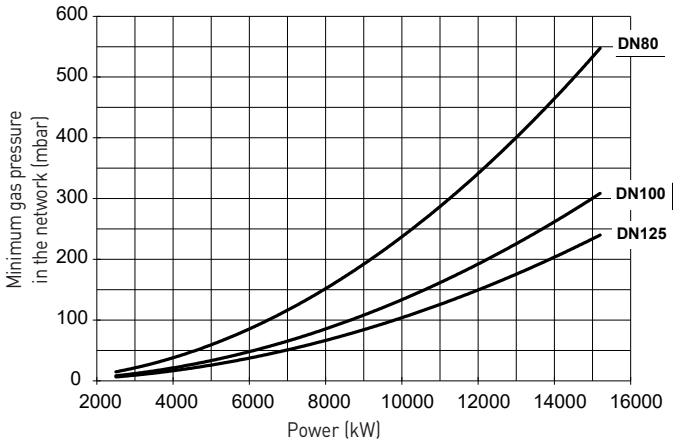

Attention:
- The working range values were determined with reference to laboratory tests with natural gas of lower calorific value Hi=34.02 MJ/Stm³ and density 0.714 kg/Stm³, (Stm³ refers to 1013 mbar and 15° C) and ambient conditions 1013 mbar and 20° C.
- To know the minimum gas pressure in the network, it is necessary to add the boiler back pressure to the value read on the curve.
- The pressure values vary depending on the configuration of the gas ramp. The minimum gas pressure curves refer to gas ramps assembled with standard supply valves.
- In the abscissa is the power value, in the ordinate the corresponding network pressure value net of the pressure in the combustion chamber. In order to know the mi nimum pressure at the ramp inlet, necessary to obtain the required gas flow, the pressure in the combustion chamber must be added to the value read on the ordinate.

SUPPORTING FRAME FOR BURNERS Q SERIES

Monoblock burners Q series are supplied complete with a steel supporting frame: burner installation and manutention are greatly simplified.

The frame is equipped with wheels to easily move the burner, and its height is adjustable to match any type of boiler or furnace.

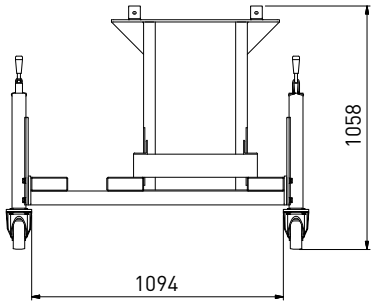

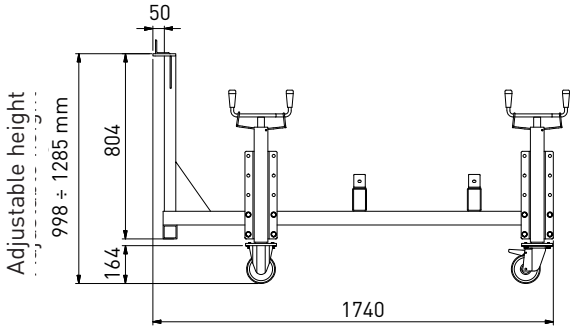

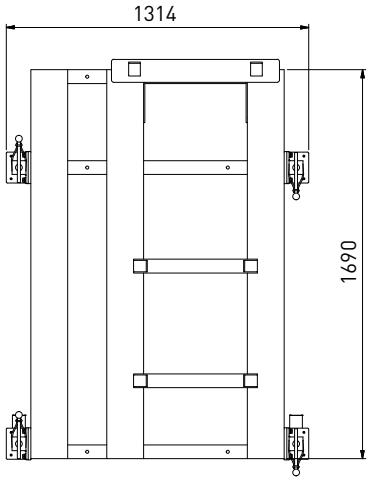

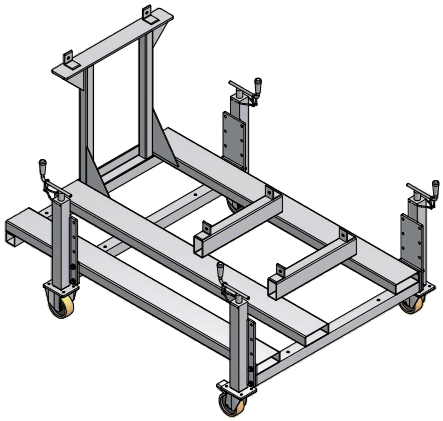

OIL PUMP
in a separate support

The pump unit is used for filtering, preheating and transferring liquid fuels to feed one or more burners. The double filter design allows the filter to be cleaned without interrupting operation. Heavy oil circulation units can be equipped with an electric heater or a combined heater for steam, hot water or diathermic oil.

OPTIONAL ON REQUEST

C.I.B. UNIGAS S.p.A.
Via L. Galvani, 9 - 35011 CAMPODARSEGO (PD) - Italy
Tel. +39 049 9200944
Fax +39 049 9200945 - 9201269
cibunigas@cibunigas.com - www.cibunigas.com

Note: specifications and data subject to change.
Errors and omissions excepted.