SIEMENS

7101

Gas burner controls

LME1…
LME2…
LME4…

Burner controls for the supervision of 1- or 2-stage gas burners or gas burners of small to medium capacity, with or without fan in intermittent operation.

The LME and this Data Sheet are intended for use by OEMs which integrate the burner controls in their products.

Use, features

Use

LME are used for the startup and supervision of 1- or 2-stage gas burners or gas burners in intermittent operation. Flame supervision takes place via an ionization probe or a QRA2 / QRA2(1) / QRA2(2) / QRA2.9 / QRA4.U / QRA10.C UV flame detector with AGQ3.xA27 ancillary unit for forced draft gas burners, or, in the case of blue-burning flames, with a QRC1 blue-flame detector. In terms of housing dimensions, the LME are identical with the burner control LGB and LMG burner controls (refer to *Type summary*).

- Applications in accordance with EN 676: Forced draft burner for gaseous fuels
- Type-tested and approved in accordance with DIN EN 298

Features

- Undervoltage detection
- Air pressure supervision with functional check of the air pressure switch during startup and operation (depending on the respective type)
- Electrical remote reset facility
- Multicolor indication of fault status and operational status messages
- Limitation of restarts
- Accurate control sequence thanks to digital signal handling
- Controlled intermittent operation after a maximum 24 hours of continuous operation

ПРОМЭЛЕКТРОНИКА / sales@prom-elec.com

Supplementary documentation

Product type	Type of documentation	Documentation number
LME	Environmental Declaration	E7101 *)
LME	Product Range Overview	Q7101

*) On request only

Warning notes

To avoid injury to persons, damage to property or the environment, the following warning notes must be observed!

Do not to open, interfere with or modify the unit!

- All activities (mounting, installation and service work, etc.) must be performed by qualified staff
- Before making any wiring changes in the connection area, completely isolate the plant from mains supply (all-polar disconnection). Ensure that the plant cannot be inadvertently switched on again and that it is indeed dead. If not observed, there is a risk of electric shock hazard. Use switches with all-polar disconnection and a contact gap of at least 3 mm
- Ensure protection against electric shock hazard by providing adequate protection for the connection terminals. If this is not observed, there is a risk of electric shock
- Press the lockout reset button/operation button of the LME or the lockout reset button extension AGK20 only manually (applying a force of no more than 10 N) without using any tools or pointed objects. If this is not observed, there is a risk of loss of safety functions and a risk of electric shock
- Fall or shock can adversely affect the safety functions. Such units must not be put into operation, even if they do not exhibit any damage. If this is not observed, there is a risk of loss of safety functions and a risk of electric shock
- Each time work has been carried out (mounting, installation, service work, etc.), check to ensure that wiring is in an orderly state and make the safety checks as described in *Commissioning notes*. If this is not observed, there is a risk of loss of safety functions and a risk of electric shock

Engineering notes

- When used in connection with actuators, there is no position feedback signal from the actuator to the burner control
- When used in connection with actuators, the requirements of applicable norms and regulations must be observed
- The running times of the actuators must match the burner control's program. An additional safety check of the burner together with the actuators is required
- When replacing the LGB or LMG with the LME and using QRA2 / QRA2(1) / QRA2(2) / QRA2.9 / QRA4.U / QRA10.C, the ancillary unit AGQ1 or AGQ2 must be replaced with the ancillary unit AGQ3.xA27

Mounting notes

Ensure that the relevant national safety regulations are complied with.

- Always run the high ignition voltage cables separate from the unit and other cables while observing the greatest possible distance
- Do not mix up live and neutral conductors
- Install switches, fuses, earthing, etc., in compliance with local regulations
- Risk of damage to the switching contacts!
  If the external primary fuse (Si) is blown due to overload or short-circuit at the terminals, the LME must be replaced.
- The connection diagrams show the burner controls with earthed neutral conductor. In networks with non-earthed neutral conductor and ionization current supervision, terminal 2 must be connected to the earth conductor via an RC unit (ARC 4 668 9066 0). It must be made certain that local regulations are complied with (e.g. protection against electric shock hazard) since AC 120 V (50/60 Hz) or AC 230 V (50/60 Hz) mains voltage produces peak leakage currents of 2.7 mA
- Ensure that the maximum permissible current load for the connection terminals will not be exceeded; refer to ‘Technical data’
- Do not feed external mains voltage to the control outputs of the burner control. When testing the devices controlled by the burner control (fuel valves, etc.), the burner control must not be connected
- Secure the earthing lug in the plug-in base AGK11 underneath with a screw and a lockwasher
- Check the connection cables of the air pressure switch for short-circuits (terminals 3, 6 and 11) Failure to observe this information poses a risk of damaging the safety functions.
- If the burner does not have a fan motor, terminal 3 must be connected to the AGK25 PTC resistor or else the burner will not start up reliably.
- For safety reasons, feed the neutral conductor to terminal 2. Connect the burner components (fan, ignition transformer and fuel valves) to the neutral distributor as shown below. The connection between neutral conductor and terminal 2 is prewired in the base

Example

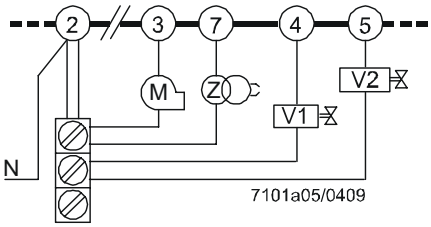

Legend

V...	Fuel valve
M	Fan motor
Z	Ignition transformer

Correct wiring of neutral conductors!

Recommendation:

Note
In environments with high electromagnetic interference, terminal 3 should be loaded with the AGK25 for burners without a fan motor or for fan control with an auxiliary contactor, otherwise the burner will not start reliably.

Connection of OCI400 optical interface

- Plug the OCI400 optical interface into the socket on the lockout reset button of the LME. Interface diagnostics works only if the AGK20 lockout reset button extension is not fitted
- Without using an extension, connect the OCI400 optical interface to the interface of your PC according to the following example setup

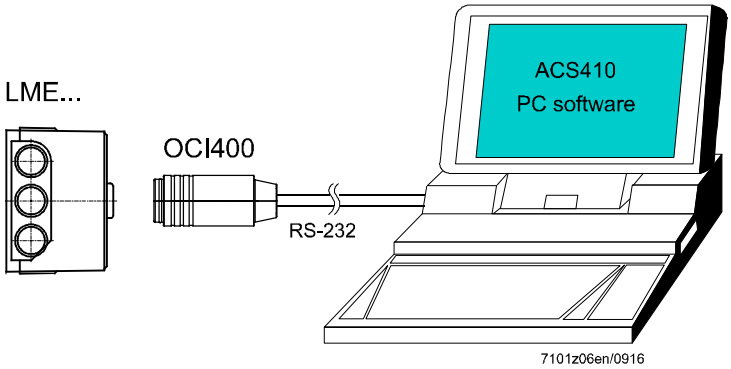

Electrical connection of flame detectors

It is important to achieve practically disturbance- and loss-free signal transmission:

- Never run detector cables together with other cables
  – Line capacitance reduces the magnitude of the flame signal
  – Use a separate cable
- Observe the permissible length of the detector cables (see Technical data)
- The ionization probe and ignition electrode are not protected against electric shock hazard
- Locate the ignition electrode and the ionization probe such that the ignition spark cannot arc over to the ionization probe (risk of electrical overloads) and that it cannot adversely affect the supervision of ionization
- With both ionization current and UV supervision, the cable length for the flame detector must not exceed 1 m (other cable lengths only available on request)
- Insulation resistance
  – Must be a minimum of 50 MΩ between ionization probe and ground
  – Soiled detector holders reduce the insulation resistance, thus supporting creepage currents

☞ Note!
Recommendation:
Use high-quality detector cables with heat-resistant insulation and an ionization probe with ceramic insulation.

- Earth the burner in compliance with the relevant regulations; earthing the boiler alone does not suffice

Commissioning notes

When commissioning the plant for the first time or when doing maintenance work, make the following safety checks:

	Safety check to be carried out	Anticipated response
a)	Burner startup with previously interrupted line to the flame detector	LME11/LME41.051: Maximum of 3 restarts LME2/LME41.052/LME41.053/LME41.054/LME41.071/ LME41.09/LME44: Non-alterable lockout at the end of the safety time (TSA)
b)	Burner operation with simulated loss of flame. For that purpose, cut off the fuel supply	LME11/LME41.051: • Establishment of flame at the end of safety time (TSA) → Maximum of 3 restarts • No establishment of flame at the end of safety time (TSA) → Non-alterable lockout LME2/LME44: Non-alterable lockout LME41.052 / LME41.053 / LME41.054 / LME41.071 / LME41.09 / LME44.190: Restart
c)	Burner operation with simulated air pressure failure (not with atmospheric burners)	Immediate non-alterable lockout LME41: Safety shutdown / restart

Prior to commissioning the system, the following points must be checked:

- The correct functioning of the flame detector in the event of loss of flame during operation (including the response time), with extraneous light during the prepurge time, and when there is no establishment of flame at the end of the safety time
- Air pressure
- Safety loop (e.g., safety temperature limiter)
- Minimum gas pressure (gas pressure switch)

Applied directives:

- Low-voltage directive 2014/35/EC
- Directive for pressure devices 2014/68/EU
- Gas Appliances Regulation (EU) (EU) 2016/426
- Electromagnetic compatibility EMC (immunity) *) 2014/30/EC

*) The compliance with EMC emission requirements must be checked after the burner control is installed in equipment

Compliance with the regulations of the applied directives is verified by the adherence to the following standards / regulations:

- Automatic burner control systems for burners and appliances burning gaseous or liquid fuels DIN EN 298
- Safety and control devices for burners and appliances burning gaseous and/or liquid fuels – General requirements DIN EN 13611
- Automatic electrical controls Part 2-5: Particular requirements for automatic electrical burner control systems DIN EN 60730-2-5

The relevant valid edition of the standards can be found in the declaration of conformity!

Note on **DIN EN 60335-2-102**
Household and similar electrical appliances – Safety
Part 2-102:
Particular requirements for gas, oil, and solid-fuel burning appliances having electrical connections. The electrical connections of the LME and the AGK11 plug-in base comply with the requirements of DIN EN 60730-2-5.

EAC Conformity mark (Eurasian Conformity mark)

UKCA conformity mark (UK)

China RoHS
Hazardous substances table:
http://www.siemens.com/download?A6V10883536

Standards and certificates (cont'd)

Product no.	DIN Geprüft	DVGW	TÜV SÜD	AGA	bsi.
LME11.230C2	---	●	●	---	●
LME11.330C2	---	●	●	●	●
LME21.130C1	●	●	●	---	●
LME21.130C2	●	●	●	●	●
LME21.230C2	●	●	●	●	●
LME21.330C1	●	●	●	---	●
LME21.330C2	●	●	●	●	●
LME21.350C1	●	●	●	---	●
LME21.350C2	●	●	●	●	●
LME21.550C2	●	●	●	●	●
LME22.131C2	●	●	●	●	●
LME22.231C2	●	●	●	●	●
LME22.232C2	●	●	●	●	●
LME22.233C2	●	●	●	●	●
LME22.331C1	●	●	●	---	●
LME22.331C2	●	●	●	●	●
LME23.331C2	●	●	●	●	●
LME23.351C2	●	●	●	●	●
LME41.051C2	---	●	●	---	●
LME41.052C2	---	●	●	---	●
LME41.053C2 *)	---	●	●	---	●
LME41.054C2	---	●	●	---	●
LME41.071C2	---	●	●	---	●
LME41.091C2	---	●	●	---	●
LME41.092C2	---	●	●	---	●
LME44.056C2	---	●	●	●	●
LME44.057C1	---	●	●	---	●
LME44.057C2	---	●	●	●	●
LME44.190C2	---	●	●	●	●

*) On request

Lifetime

The burner control has a designed lifetime* of 250,000 burner startup cycles which, under normal operating conditions in heating mode, correspond to approx. 10 years of usage (starting from the production date given on the type field). This lifetime is based on the endurance tests in the standard EN 298. A summary of the conditions has been published by the European Control Manufacturers Association (Afecor) (www.afecor.org).

The designed lifetime is based on use of the burner controls according to the manufacturer's Data Sheet. After reaching the designed lifetime in terms of the number of burner startup cycles, or the respective time of usage, the burner control is to be replaced by authorized personnel.

* The designed lifetime is not the warranty time specified in the Terms of Delivery.

Disposal notes

The LME contains electrical and electronic components and must not be disposed of together with domestic waste. Local and currently valid legislation must be observed.

Mechanical design

LME

- Units of plug-in design like their predecessor types LGB and LMG (see Dimensions)
- Burner controls LME and plug-in base AGK11 are black
- The housing is made of impact-proof, heat-resistant and flame-retarding plastic. It is of plug-in design and engages audibly in the base
- The housing accommodates the
  - microcontroller for the control sequence and the control relays for load control
  - electronic flame signal amplifier (ionization)
  - Lockout reset button with integrated 3-color signal lamp (LED) for operating status and fault status messages and the socket for connecting the OCI400 optical interface or the AGK20 lockout reset button extension
- All safety-related digital inputs and outputs of the system are monitored by means of a contact feedback network

Versions

- Burner capacity unlimited (thermal output on startup ≤120 kW)
- 3 restarts in the event of loss of flame during operation (LME11/LME41.051)
- Restart in the event of loss of flame during operation (LME41.052/LME41.053/LME41.054/LME41.071/LME41.091/ LME41.092/LME44.190)

Indication and diagnostics

- Multicolor display of operating status and fault status messages via integrated 3-color signal lamp (LED) in the lockout reset button
- Operating status messages, fault status messages, and service information are transmitted via a unidirectional interface (UDS) in diagnostic mode. An OCI400 optical interface is used for this, which is attached to the lockout reset button and features an integrated LED signal lamp. The OCI400 then transmits the information to the ACS410 PC software or to flue gas analyzers from various manufacturers
- The ACS410 PC software offers straightforward operation via the OCI400 optical interface, convenient readout of settings and operating states, trend recordings, and targeted diagnostics of the LME

Type summary

The product nos. applies to the LME without plug-in base and without flame detector. For ordering information on plug-in bases and other accessories, see *Accessories*.

Flame detector	Article no.	Product no.	Mains voltage	tw approx. s	TSA max. s	t1 min. s	t3 approx. s	t3n approx. s	t4 approx. s	t10 min. s [3]	t11 min. s [1]	t12 min. s [1]	Repetition	Replacing…
Burner controls for 1-stage burners (up to 120 kW output)														
Ionization probe or QRA2 / QRA2(1) / QRA2(2) / QRA2.9 / QRA4.U / QRA10.C [4] with AGQ3.xA27	BPZ:LME11.230C2	LME11.230C2	AC 230 V	2,5	3	20	2	2,5	---	5	---	---	3x	---
	BPZ:LME11.330C2	LME11.330C2	AC 230 V	2,5	3	30	2	2,5	---	5	---	---	3x	---
Burner controls for 2-stage burners, without actuator control														
Ionization probe or flame detector QRA2 / QRA2(1) / QRA2(2) / QRA2.9 / QRA4.U / QRA10.C [4] with AGQ3.xA27	BPZ:LME21.130C1	LME21.130C1	AC 120 V	2,5	3	7	2	2,5	8	5	---	---	---	LGB21.130A17
	BPZ:LME21.130C2	LME21.130C2	AC 230 V	2,5	3	7	2	2,5	8	5	---	---	---	LGB21.130A27 LMG21.130B27
	BPZ:LME21.230C2	LME21.230C2	AC 230 V	2,5	3	20	2	2,5	8	5	---	---	---	LGB21.230A27 LMG21.230B27
	BPZ:LME21.330C1	LME21.330C1	AC 120 V	2,5	3	30	2	2,5	8	5	---	---	---	---
	BPZ:LME21.330C2	LME21.330C2	AC 230 V	2,5	3	30	2	2,5	8	5	---	---	---	LGB21.330A27 LMG21.330B27
	BPZ:LME21.350C1	LME21.350C1	AC 120 V	2,5	5	30	2	4,5	10	5	---	---	---	LGB21.350A17
	BPZ:LME21.350C2	LME21.350C2	AC 230 V	2,5	5	30	2	4,5	10	5	---	---	---	LGB21.350A27 LMG21.350B27
	BPZ:LME21.550C2	LME21.550C2	AC 230 V	2,5	5	50	2	4,5	10	5	---	---	---	LGB21.550A27

Legend

TSA	Safety time
tw	Waiting time
t1	Prepurge time
t3	Preignition time
t3n	Postignition time
t4	Interval between ignition OFF and release of fuel valve V2
t10	Specified time for air pressure signal
t11	Programmed opening time for actuator
t12	Programmed closing time for actuator
t22	2nd safety time

1) Max. running time available for actuator. Actuator running time must be shorter
2) 2nd safety time + response time of flame relay
3) Approx. 180 s
4) Only used for AC 230 V

Type summary (cont'd)

The product nos. applies to the LME without plug-in base and without flame detector. For ordering information on plug-in bases and other accessories, see *Accessories*.

Flame detector	Article no.	Product no.	Mains voltage	tw approx. s	TSA max. s	t1 min. s	t3 approx. s	t3n approx. s	t4 approx. s	t10 min. s [3]	t11 min. s [1]	t12 min. s [1]	Repetition	Replacing…
Burner controls for 2-stage burners, with actuator control														
Ionization probe or flame detector QRA2 / QRA2(1) / QRA2(2) / QRA2.9 / QRA4.U / QRA10.C [4] with AGQ3.xA27	BPZ:LME22.131C2	LME22.131C2	AC 230 V	2,5	3	7	3	2,5	8	3	12	12	---	LGB22.130A27 LMG22.130B27
	BPZ:LME22.231C2	LME22.231C2	AC 230 V	2,5	3	20	3	2,5	8	3	12	12	---	---
	BPZ:LME22.232C2	LME22.232C2	AC 230 V	2,5	3	20	3	2,5	8	3	16,5	16,5	---	LGB22.230A27 LGB22.230B27 LMG22.230B27
	BPZ:LME22.233C2	LME22.233C2	AC 230 V	2,5	3	20	3	2,5	8	3	30	30	---	LMG22.233B27
	BPZ:LME22.331C1	LME22.331C1	AC 120 V	2,5	3	30	3	2,5	8	3	12	12	---	LGB22.330A17
	BPZ:LME22.331C2	LME22.331C2	AC 230 V	2,5	3	30	3	2,5	8	3	12	12	---	LGB22.330A27 LMG22.330B27
Burner controls for 2-stage burners, with actuator control														
Blue-flame detector QRC1	BPZ:LME23.331C2	LME23.331C2	AC 230 V	2,5	3	30	3	2,5	8	3	12	12	---	LGB32.330A27
	BPZ:LME23.351C2	LME23.351C2	AC 230 V	2,5	5	30	1	4,5	10	3	12	12	---	LGB32.350A27

Legend

TSA	Safety time
tw	Waiting time
t1	Prepurge time
t3	Preignition time
t3n	Postignition time
t4	Interval between ignition OFF and release of fuel valve V2
t10	Specified time for air pressure signal
t11	Programmed opening time for actuator
t12	Programmed closing time for actuator
t22	2nd safety time

1) Max. running time available for actuator. Actuator running time must be shorter
2) 2nd safety time + response time of flame relay
3) Approx. 180 s
4) Only used for AC 230 V

Type summary (cont'd)

The product nos. applies to the LME without plug-in base and without flame detector. For ordering information on plug-in bases and other accessories, see *Accessories*.

Flame detector	Article no.	Product no.	Mains voltage	TSA max. s	tw approx. s	t1´ min. s	t3 approx. s	t3n approx. s	t4 approx. s	t22 approx. s	Repetition	Replacing…
Burner controls for atmospheric burners												
Ionization probe or flame detector QRA2 / QRA2(1) / QRA2(2) / QRA2.9 / QRA4.U / QRA10.C [1] with AGQ3.xA27	BPZ:LME41.051C2	LME41.051C2	AC 230 V	5	2,5	1	1	4,5	---	---	3x	---
	S55333-B103-C100	LME41.052C2	AC 230 V	5	2.5	1	10	4.5	---	---	●	---
	BPZ:LME41.053C2	LME41.053C2	AC 230 V	5	2,5	10	1	4,5	---	---	●	On request
	BPZ:LME41.054C2	LME41.054C2	AC 230 V	5	2,5	1	1	4,5	---	---	●	LGD12.05A27[2)3)]
	BPZ:LME41.071C2	LME41.071C2	AC 230 V	10	2,5	10	1	9	---	---	●	---
	BPZ:LME41.091C2	LME41.091C2	AC 230 V	10	2,5	1	10	9	---	---	●	---
	BPZ:LME41.092C2	LME41.092C2	AC 230 V	10	2,5	1	1	9	---	---	●	LGD12.01A27[2)3)]
Burner controls for atmospheric burners												
Ionization probe or flame detector QRA2 / QRA2(1) / QRA2(2) / QRA2.9 / QRA4.U / QRA10.C [1] with AGQ3.xA27	BPZ:LME44.056C2	LME44.056C2	AC 230 V	5	16	9	2	4,5	10	5	---	LGB41.255A27
	BPZ:LME44.057C1	LME44.057C1	AC 120 V	5	16	9	2	4,5	10	8	---	LGB41.258A17
	BPZ:LME44.057C2	LME44.057C2	AC 230 V	5	16	9	2	4,5	10	8	---	LGB41.258A27
	BPZ:LME44.190C2	LME44.190C2	AC 230 V	10	2,5	12	0,5	9,5	25	---	●	---

Legend

TSA	Safety time
tw	Waiting time
t1'	Prepurge time
t3	Preignition time
t3n	Postignition time
t4	Interval between ignition OFF and release of fuel valve V2
t22	2nd safety time

1) Max. running time available for actuator. Actuator running time must be shorter
2) Only suitable for 1-stage operation
3) Not pin-compatible

Connection accessories for small burner controls

Plug-in base **AGK11**
Article no.: **BPZ:AGK11**
To connect the small-capacity burner controls to the burner plant.
Refer to Data Sheet N7201.

Cable holder **AGK66**
Article no.: **BPZ:AGK66**
For plug-in base AGK11.
Refer to Data Sheet N7201.

Cable gland holder **AGK65**
Article no.: **BPZ:AGK65**
- Cable gland holder for AGK11 plug-in base
- Pg11

Refer to Data Sheet N7201.

Cable gland holder **AGK65.1**
Article no.: **BPZ:AGK65.1**
- Cable gland holder for AGK11 plug-in base
- M16 x 1.5

Refer to Data Sheet N7201.

Flame detector

UV flame detector **QRA2 / QRA2(1) / QRA2(2) / QRA2.9**
Only in conjunction with ancillary unit AGQ3.xA27.
Refer to Data Sheet N7712.

UV flame detector **QRA4.U**
Only in conjunction with ancillary unit AGQ3.xA27.
Refer to Data Sheet N7711.

UV flame detector **QRA10.C**
Only in conjunction with ancillary unit AGQ3.xA27.
Refer to Data Sheet N7712.

Blue-flame detector **QRC1**
Refer to Data Sheet N7716.

Frontal illumination

Lateral illumination

Ionization probe
Flame detector for use with Siemens burner controls for the supervision of gas flames.
To be supplied by customer.

Service tools

Optical Interface **OCI400**
Article no.: **BPZ:OCI400**

- Optical interface between burner control and PC
- Facilitates viewing and recording of setting parameters on site using the ACS410 PC software

Refer to Data Sheet N7614

PC Software **ACS410**
Article no.: **BPZ:ACS410**
PC software for parameterization and visualization of the burner control.
On request.
Refer to Software Documentation J7352

Actuators

Actuator **SQN3**
Refer to Data Sheet N7808

Actuator **SQN7**
Refer to Data Sheet N7804

Actuator **SQN9**
Refer to Data Sheet N7806

Others

Valve proving system **LDU11** (only LME2)
Designed to check the tightness of shutoff valves in connection with gas burners and gas devices. In the event of inadmissible leakage, the system prevents the burner from starting up.
Refer to Data Sheet N7696

RC unit **ARC466890660**
Article no.: **BPZ:ARC466890660**
For the supervision of ionization currents in networks with non-earthed neutral conductor

PTC resistor **AGK25**
Article no.: **BPZ:AGK25**

- AC 230 V
- To load terminal 3 (for burners without fan motor such as atmospheric gas burners)

Ancillary unit **AGQ3.xA27**
For UV supervision. Can be fitted under the plug-in base.

Article no.	Type	Cable length (mm)
BPZ:AGQ3.1A27	**AGQ3.1A27**	500
BPZ:AGQ3.2A27	**AGQ3.2A27**	300

Reset button extension **AGK20**
For more details, refer to chapter *Dimensions*.

General unit data

Mains voltage	AC 120 V +10%/-15% AC 230 V +10%/-15%
Mains frequency	50...60 Hz ±6%
Power consumption	12 VA
External primary fuse (Si)	6.3 A (slow)

Caution!
Risk of damage to the switching contacts!
If the external primary fuse (Si) is blown due to overload or short-circuit at the terminals, the LME must be replaced.

Mounting position	Optional
Input current at terminal 12	Max. 5 A
Weight	Approx. 160 g
Safety class I (burner control with plug-in base)	For applications without safe separation. Protection against electric shock is achieved through double or reinforced insulation. Provision for the protective earth connection is made in the plug-in base AGK11.
Type of shutdown or interruption for each circuit	Shutdown with micro switch, 1-pole Mode of operation type 2 B
Degree of protection	IP40
	Note The burner or boiler manufacturer must ensure degree of protection IP40 through adequate installation of the LME.
Creepage distances and air gaps	• Overvoltage category III • Rated surge voltage 4 kV at 230 V AC • Pollution degree 2 • Up to 2,000 m above sea level
Software class	Class C 2-channel structure
Reaction time in the event of loss of flame	Max. 1 s
Perm. cable length terminal 1	Max. 1 m at a line capacitance of 100 pF/m , unshielded (max. 3 m at 15 pF/m)
Perm. cable length from QRA2 / QRA2(1) / QRA2(2) / QRA2.9 / QRA4.U / QRA10.C to AGQ3.xA27 (lay separate cable). Multicore cables are not permitted.	Max. 20 m at 100 pF/m, unshielded
Remote lockout reset laid separately	Max. 20 m at 100 pF/m, unshielded
Perm. cable length terminals 8 and 10	Max. 20 m at 100 pF/m, unshielded (lay separate cable)
Perm. cable lengths other terminals	Max. 3 m at 100 pF/m, unshielded
Permissible input voltage at terminals 6 and 11	120 V AC +10%/-15% 230 V AC +10%/-15%
Possible input current at terminal 6	0.5 mA
Possible input current at terminals 8 and 11	1 mA

Perm. terminal load	At cosφ ≥0.6	At cosφ = 1
Terminal 3	Max. 2.7 A (15 A for max. 0.5 s → only LME2)	Max. 3 A
Terminals 4, 5, 7 and 9 (11)	Max. 1.7 A	Max. 2 A
Terminal 10	Max. 1 A	Max. 1 A

Environmental conditions	**Storage**	EN 60721-3-1:1997
	Climatic conditions	Class 1K3
	Mechanical conditions	Class 1M2
	Temperature range	-20...60 °C
	Humidity	<95% r.h.
	Transport	EN 60721-3-2:1997
	Climatic conditions	Class 2K2
	Mechanical conditions	Class 2M2
	Temperature range	-20...60 °C
	Humidity	<95% r.h.
	Operation	EN 60721-3-3:1995 + A2:1997
	Climatic conditions	Class 3K3
	Mechanical conditions	Class 3M3
	Temperature range	-20... 60 °C
	Humidity	<95% r.h.
	Installation altitude	Max. 2,000 m above sea level

Warning!
Condensation, formation of ice and ingress of water are not permitted!
If this is not observed, there is a risk of loss of safety functions and a risk of electric shock.

AGK11 plug-in base	**Connectable conductor cross-sections**	
	• Terminals 1...12	Min. 0.5 mm² Max. 1.5 mm² Wire or stranded wire with ferrules
	• Auxiliary terminals N, PE, 31, 32	Min. 0.5 mm² Max. 1.5 mm² Wire or stranded wire with ferrules (when connecting 2 wires or stranded wires per terminal, the same cross-sectional areas must be used for each terminal)

Flame supervision
with ionization probe

	At mains voltage	
	UN = AC 120 V [1])	UN = AC 230 V [1])
Detector voltage between ionization probe and ground (AC voltmeter Ri ≥10 MΩ)	AC 50...120 V	AC 115...230 V
Switching threshold (limit values): Switching on (flame ON) (DC ammeter Ri ≤5 kΩ) Switching off (flame OFF) (DC ammeter Ri ≤5 kΩ)	 ≥DC 1.5 µA ≤DC 0.5 µA	 ≥DC 1.5 µA ≤DC 0.5 µA
Detector current required for reliable operation	≥DC 3 µA	≥DC 3 µA
Switching threshold in the event of poor flame during operation (signal lamp (LED) flashes green)	Approx. DC 5 µA	Approx. DC 5 µA
Short-circuit current between ionization probe and ground (AC ammeter Ri ≤5 kΩ)	Max. AC 50...150 µA	Max. AC 100...300 µA
Possible detector current in operation	Max. 20 µA	Max. 20 µA

[1]) For applications outside the European Union, operation at mains voltage AC 120 V/AC 230 V ±10% is ensured

Note!
With the same quality of flame, the detector current with the LME may be different from than with LMG/LGB.

Flame supervision with ionization is accomplished by making use of the conductivity and rectifying effect of the flame.

The DC current that flows in the presence of a flame (ionization current) is largely proportional to the flame quality. This current is measured in the flame signal amplifier.

The amplifier is designed such that it only responds to the DC current component of the flame signal. This ensures that a short circuit between the ionization probe and ground cannot simulate a flame signal (since in that case AC current would flow).

Note!
The ignition (ignition spark) can have a negative effect on the ionization current formation during startup.

To minimize the impact
- the positioning of the ionization probe must be checked and optimized
- it may be beneficial to replace the electrical connections (phase / neutral) on the primary side of the ignition transformer

A short-circuit between ionization probe and ground initiates a non-volatile lockout depending on the restart setting.

Measuring circuit

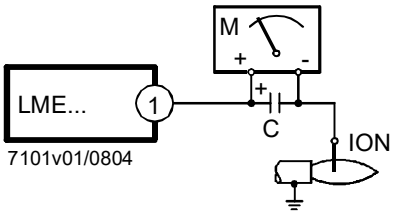

Legend
C Electrolytic capacitor 100...470 µF; DC 10...25 V
ION Ionization probe
M Microammeter, Ri max. 5,000 Ω

For detector currents, see *Technical data*.

Flame supervision with QRA2 / QRA2(1) / QRA2(2) / QRA2.9 / QRA4.U / QRA10.C and AGQ3.xA27

Only in connection with LMExx.xxxx2 (AC 230 V)!

Notes
Lifetime of the UV cell.
UV cells and the QRA2 / QRA2(1) / QRA2(2) / QRA2.9 / QRA4.U / QRA10.C are subject to wear and tear and must be replaced as part of regular maintenance, at the latest at the end of the average lifetime of the UV cell. The lifetime of the UV cell corresponds to approx. 10,000 hours at a maximum of +50°C; higher ambient temperatures reduce the lifetime considerably. For details, refer to chapter *Technical Data* in Data Sheet N7712 for the QRA2 / QRA2(1) / QRA2(2) / QRA2.9 / QRA10.C. For details, refer to chapter *Technical Data* in Data Sheet N7711 for the QRA4.U.

Mains voltage	AC 230 V +10%/-15%
Mains frequency	50...60 Hz ±6%
Perm. cable length from QRA2 / QRA2(1) / QRA2(2) / QRA2.9 / QRA4.U / QRA10.C to AGQ3.xA27 (lay separate cable). Multicore cables are not permitted.	Max. 20 m, unshielded
Perm. cable length from AGQ3.xA27 to LMExx.xxxx2	Max. 2 m, unshielded
Weight of AGQ3.xA27	Approx. 140 g
Perm. mounting position	Optional
Degree of protection	IP40, to be ensured through mounting
Power consumption	4.5 VA

	At mains voltage U_N	
	AC 220 V	AC 240 V
Detector voltage at QRA2 / QRA2(1) / QRA2(2) / QRA2.9 / QRA4.U / QRA10.C (with no load)		
Terminal 3 OFF (refer to control sequence)	DC 400 V	DC 400 V
Terminal 3 ON (refer to control sequence)	DC 300 V	DC 300 V
Detector voltage Load by DC measuring instrument Ri >10 MΩ		
Terminal 3 OFF (refer to control sequence)	DC 380 V	DC 380 V
Terminal 3 ON (refer to control sequence)	DC 280 V	DC 280 V
DC current detector signals with flame detector QRA2 / QRA2(1) / QRA2(2) / QRA2.9 / QRA4.U / QRA10.C	**Min. required**	**Max. possible**
Measurement at the flame detector QRA2 / QRA2(1) / QRA2(2) / QRA2.9 / QRA4.U / QRA10.C	200 µA	500 µA

Ancillary unit
AGQ3.xA27

Use of the AGQ3.xA27 ancillary unit is mandatory in connection with LMExx.xxxx2 burner controls.

A UV test with increased supply voltage is performed to check the through-ignition tendency of aging UV tubes. The UV test is performed in standby until the fan motor (terminal 3) is activated, refer to chapter ‘Program sequence’.

Connection diagram

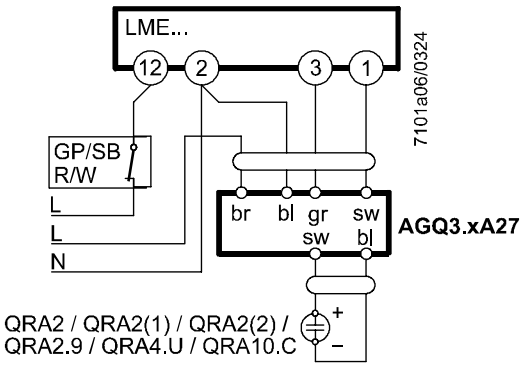

Measuring circuit for measuring the UV flame current

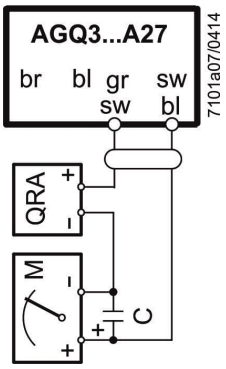

Measurement made at the flame detector QRA2 / QRA2(1) / QRA2(2) / QRA2.9 / QRA4.U / QRA10.C

Legend

C	Electrolytic capacitor 100...470 µF; DC 10...25 V	bl	Blue
M	Microammeter Ri max. 5,000 Ω	br	Brown
QRAx	UV flame detector QRA2 / QRA2(1) / QRA2(2) / QRA2.9 / QRA4.U / QRA10.C	gr	Grey (old: rt = red)
GP	Pressure switch	sw	Black
SB	Safety limiter		
R	Control thermostat or pressurestat		
W	Limit thermostat or pressure switch		

Flame supervision with QRC1
(only LME23)

	Detector current required (with flame)	Perm. detector current (without flame)	Possible detector current with flame (typically)
QRC1	Min. 40 µA	Max. 5,5 µA	Max. 60 µA

The values given in the table above only apply under the following conditions:
- Mains voltage AC 230 V
- Ambient temperature 23 °C

Green signal lamp (LED) on operating display

	Detector current in operation: - Flame signal instable - Green signal lamp (LED) flashing	Detector current in operation: - Flame signal stable - Green signal lamp (LED) steady on
QRC1	<45 µA	>45 µA

The values given in the table above only apply under the following conditions:
- Mains voltage AC 230 V
- Ambient temperature 23 °C

Measuring circuit for detector current

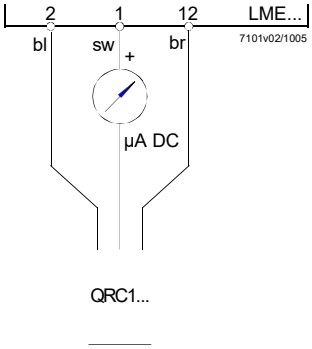

Legend

µA DC	DC microammeter with an internal resistance of Ri = max. 5 kΩ
bl	Blue
sw	Black
br	Brown

As an alternative to detector current measurement, the OCI400 optical interface / ACS410 PC software can be used. In that case, the DC microammeter is not required.

Functions

Preconditions for burner startup

- Burner control must be reset
- All contacts in the line are closed, request for heat
- No undervoltage
- Air pressure switch (LP) must be in its no-load position
- Fuel valve V1 is connected
- Fan motor or AGK25 PTC resistor is connected (not applicable for LME4)
- Flame detector is darkened and there is no extraneous light

LME41

- Air pressure switch must be in its no-load position or DBR1

LME44

- CPI in its no-load position or DBR2

Undervoltage

- Safety shutdown from the operating position takes place should mains voltage drop below about AC 75 V (at U_N = AC 120 V)
- Restart is initiated when mains voltage exceeds about AC 95 V (at U_N = AC 120 V)
- Safety shutdown from the operating position takes place should mains voltage drop below about AC 165 V (at U_N = AC 230 V)
- Restart is initiated when mains voltage exceeds about AC 175 V (at U_N = AC 230 V)

Controlled intermittent operation

After no more than 24 hours of continuous operation, the burner control will initiate automatic controlled shutdown followed by a restart.

Control sequence in the event of fault

If a non-alterable lockout occurs, the outputs for the fuel valves, the burner motor and the ignition equipment are always immediately deactivated (<1 s).

Cause	Response
Mains voltage failure	Safety shutdown followed by restart on restoration of mains voltage
Voltage below undervoltage threshold	Safety shutdown
Voltage above undervoltage threshold	Restart
Extraneous light during prepurge time (t1)	Non-alterable lockout
Extraneous light during waiting time (tw)	Start prevention, a non-alterable lockout occurs after a maximum of 30 seconds LME41.051, LME41.054, LME41.092: Prevention of startup
No flame at the end of safety time (TSA)	LME11, LME41.051: Maximum of 3 repetitions, then a non-alterable lockout occurs at the end of the safety time (TSA) LME2, LME41.052, LME41.053, LME41.054, LME41.071, LME41.09, LME44.190: Non-alterable lockout at the end of the safety time (TSA)
Loss of flame during operation	LME11, LME41.051: • Establishment of flame at the end of safety time → Max. 3 repetitions • No establishment of flame at the end of safety time → Non-alterable lockout LME2: Non-alterable lockout LME41.052, LME41.053, LME41.054, LME41.071, LME41.09, LME44.190: Repetition
Air pressure switch welded in working position LME41: No reaction	Start prevention, a non-volatile lockout occurs after a maximum of 65 seconds
Air pressure switch welded in no-load position - Error with valve proving (only in conjunction with LDU11) LME41: Air pressure switch welded in no-load position or no connection (jumper) between terminal 3 and terminal 11	Non-alterable lockout approx. 180 seconds after the specified time (t10) has elapsed ☞ Note Time may be extended by the actuator running time (t11) depending on the application.
Loss of air pressure once the specified time (t10) has elapsed and during operation LME41: No air pressure signal after completion specified time or breakdown of jumper terminal 3/terminal 11	Non-alterable lockout LME41: Safety shutdown/restart
CPI contact is open during waiting time	Start prevention, a non-volatile lockout occurs after a maximum of 60 seconds

The LME remains locked after the non-alterable lockout. The signal lamp (LED) lights up red permanently. The burner control can be reset immediately. This state will also be maintained in the event of power failures.

Resetting the burner control

After a non-alterable lockout, a reset can be carried out immediately. To do this, press the lockout reset button for about 1 second (<3 seconds). The LME can only be reset when all contacts in the line are closed and when there is no undervoltage. After a non-volatile lockout and reset, a restart with prepurging (t1) takes place.

Restart limitation (only LME11, LME41.051)

If no flame is established at the end of the safety time (TSA), or if the flame is lost during operation, a maximum of 3 restarts per controlled startup can be performed via control thermostat / pressurestat, or else a non-volatile lockout will be initiated. The restart count is restarted each time controlled switching on by control thermostat or pressurestat takes place.

Note
In the event of a restart due to loss of flame during operation, a flame signal must be generated at the end of the safety time (TSA), otherwise a non-volatile lockout will occur.

PC software ACS410

Purpose of the ACS410 PC software:

The PC software essentially serves as a display module with the following basic tasks:

- Visualization of system state with the following data:
  - Parameters
  - Process data

Note
For operating and commissioning instructions for the ACS410 PC software, refer to the J7352 Installation and Operating Instructions.

Operation

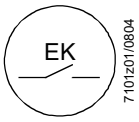

Lockout reset button is the key operating element for resetting the burner control and for activating/deactivating the diagnostics functions.

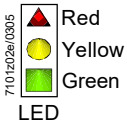

The multicolor signal lamp (LED) in the lockout reset button is the key indicating element for visual diagnostics and interface diagnostics.

Both the lockout reset button and signal lamp (LED) are located under the transparent cover of the lockout reset button.

There are 2 diagnostics choices:

1. Visual diagnostics: Operational status indication or diagnostics of the cause of fault.
2. Interface diagnostics: With the help of the OCI400 optical interface and the ACS410 PC software or flue gas analyzers of different makes

Visual diagnostics:
In normal operation, the different operating states are indicated in the form of color codes according to the color code table given below.

Operational status indication

During startup, status indication takes place according to the following table:

Color code table for multicolor signal lamp (LED)

Status	Color code	Color
Waiting time (tw), other waiting states	○.....	OFF
Air pressure switch waiting phase, prepurging, postpurging	●.....	Yellow
Ignition phase, ignition controlled	○●○●○●○●○●○	Flashing yellow
Operation, flame ok	■.....	Green
Operation, flame not ok	○■○■○■○■○■○	Flashing green
Extraneous light on burner startup	■▲■▲■▲■▲■▲■	Green-red
Undervoltage	●▲●▲●▲●▲●▲●▲	Yellow-red
Fault, alarm	▲.....	Red
Error code output (see Error code table)	○▲○▲○▲○▲○▲○	Flashing red
Interface diagnostics	▲▲▲▲▲▲▲▲▲▲▲	Red flicker light

Legend

..... Steady on
○ OFF
▲ Red
● Yellow
■ Green

Diagnostics of the cause of fault

After a non-volatile lockout, the signal lamp (LED) lights up red. In that condition, visual diagnostics of the cause of fault according to the error code table can be activated by pressing the lockout reset button for more than 3 seconds. Pressing the lockout reset button again for at least 3 seconds, interface diagnostics will be activated. Interface diagnostics works only if the lockout reset button extension AGK20 is not fitted. If the interface diagnostics have been activated by accident in the operating position – in which case the signal lamp (LED) flickers with a dim red light – they can be deactivated by pressing the lockout reset button again for more than 3 seconds. The moment of switching over is indicated by a yellow light pulse.

The following sequence activates the diagnostics of the cause of fault:

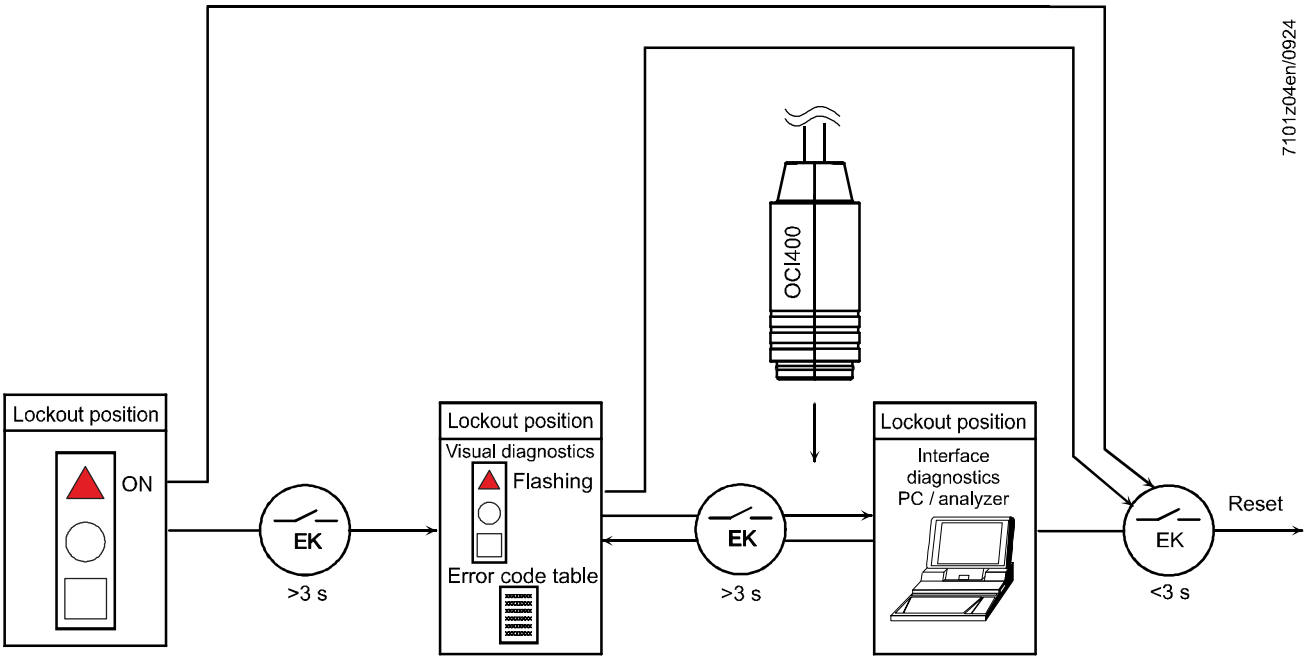

Error code table		
Signal lamp (LED) flashing code red	**Alarm at term. 10**	**Possible cause**
2 blinks	ON	No establishment of flame at the end of safety time (TSA) - Faulty or soiled fuel valves - Faulty or soiled flame detector - Poor adjustment of burner, no fuel - Faulty ignition equipment
3 x blinks	ON	Faulty air pressure switch (LP) • Loss of air pressure once the specified time (t10) has elapsed and during operation for the air pressure message • Air pressure switch (LP) welded in the no-load position • Fault during valve proving (only in conjunction with LDU11)
4 blinks	ON	Extraneous light when burner is started up
5 blinks	ON	Time supervision of air pressure switch (LP) • Air pressure switch (LP) welded in the working position
6 blinks	ON	Free
7 blinks	ON	Too many losses of flame during operation (restart limitation) • Faulty or soiled fuel valves • Faulty or soiled flame detector • Poor adjustment of burner
8 x blinks	ON	Free
9 blinks	ON	Free
10 blinks	OFF	• Wiring error • Internal error • Output contacts • Other error
14 blinks	ON	CPI contact not closed

During the time the cause of fault is diagnosed, the control outputs are deactivated
- Burner remains shut down
- External fault indication remains deactivated
- Fault status signal (alarm) at terminal 10, according to the error code table

The diagnostics of the cause of fault is quit and the burner switched on again by resetting the burner control. Press the lockout reset button for about 1 second (<3 seconds).

Warning!
If the safety time (TSA) is set too long, the safety functions will become ineffective. Compliance with the relevant standards must be ensured.

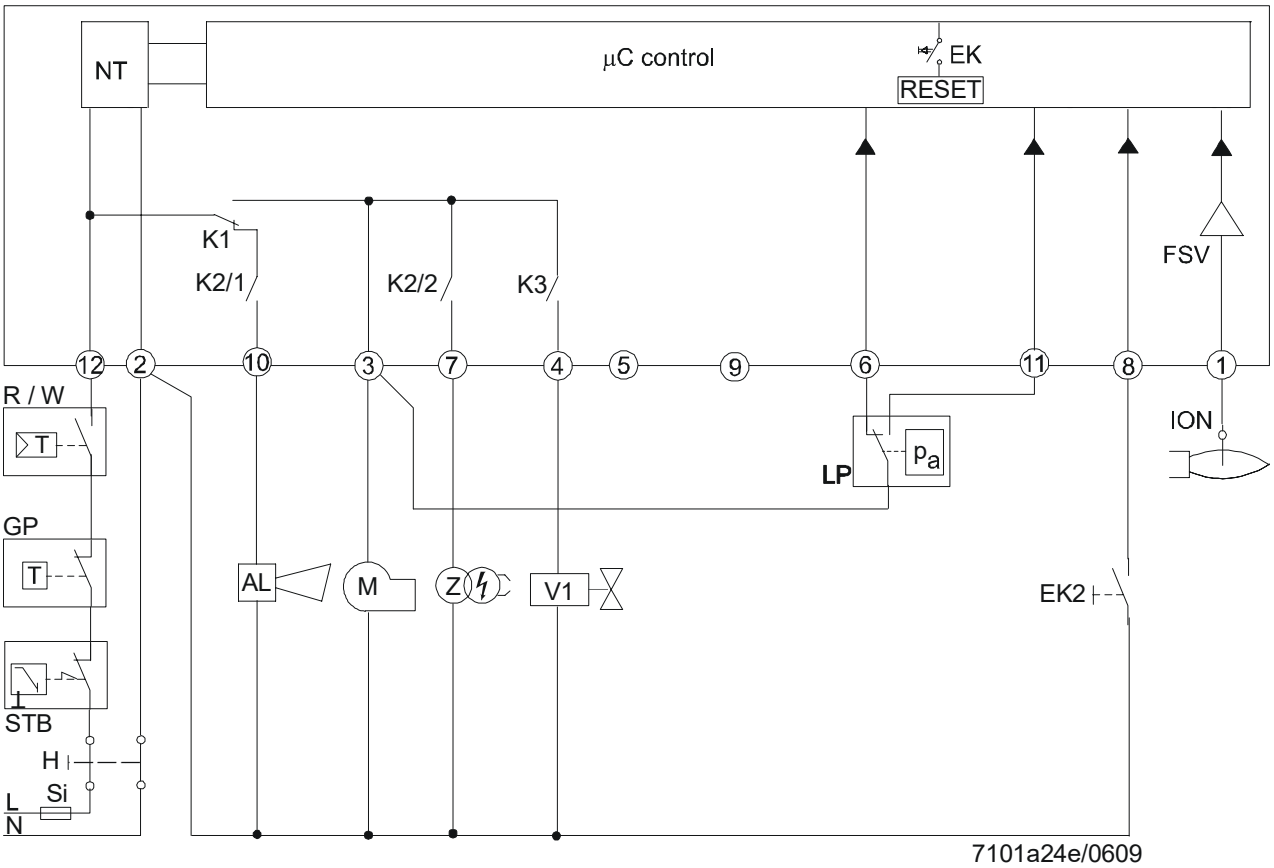

Caution!
Risk of damage to the switching contacts!
If the external primary fuse (Si) is blown due to overload or short-circuit at the terminals, the LME must be replaced.

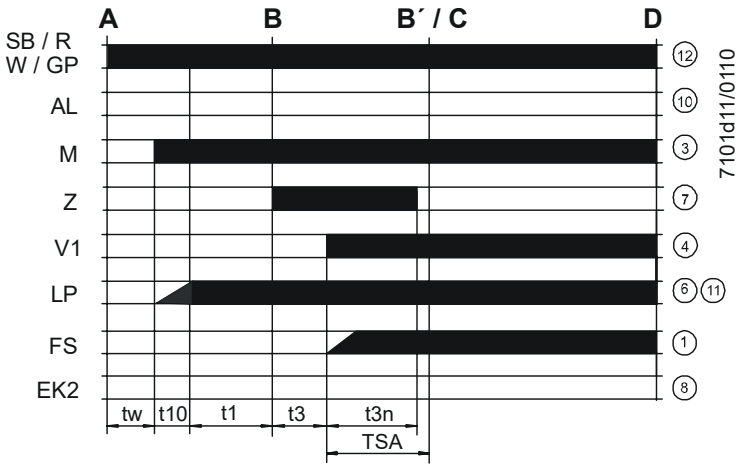

The function diagram shows the required or permissible input signals for the control sequences and the flame supervision circuit (refer to ‘Connection diagram’). If these input signals are not present, the burner control stops the startup sequence to trigger a lockout where required (safety shutdown).

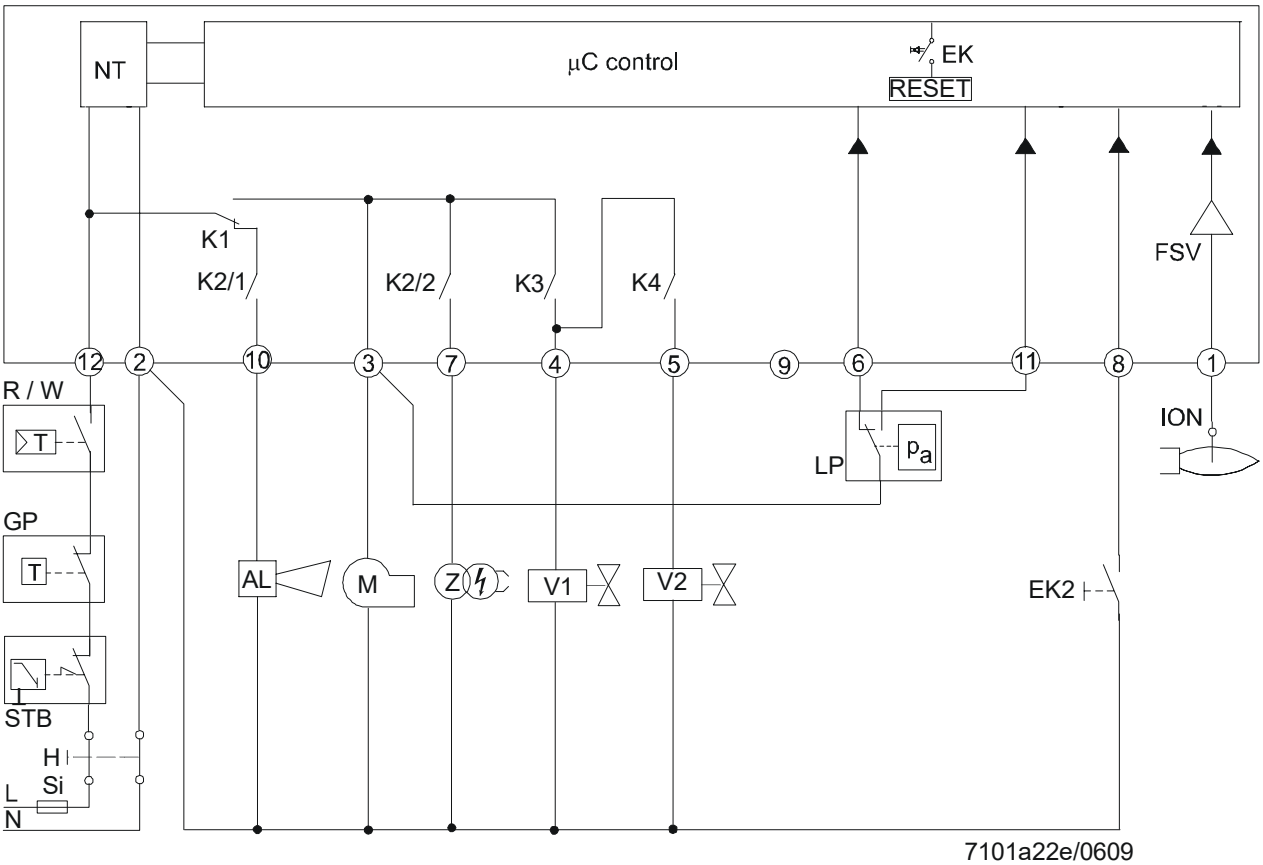

Caution!
Risk of damage to the switching contacts!
If the external primary fuse (Si) is blown due to overload or short-circuit at the terminals, the LME must be replaced.

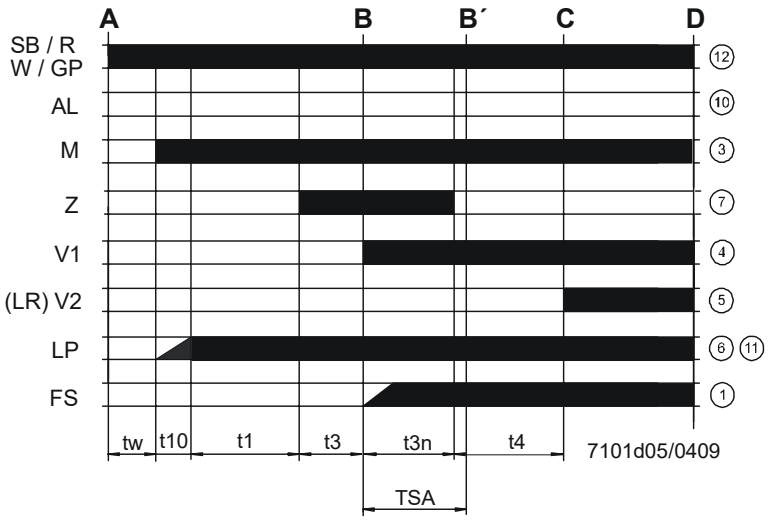

The function diagram shows the required or permissible input signals for the control sequences and the flame supervision circuit (refer to ‘Connection diagram’). If these input signals are not present, the burner control stops the startup sequence to trigger a lockout where required (safety shutdown).

Caution!
The connection diagrams shown are merely examples which must be verified in the individual case depending on the application!

Recommendation:

Note
In environments with high electromagnetic interference, terminal 3 should be loaded with the AGK25 PTC resistor for burners without a fan motor or for fan control with an auxiliary contactor, otherwise the burner will not start reliably.

Burner without fan and without air pressure switch (LP)

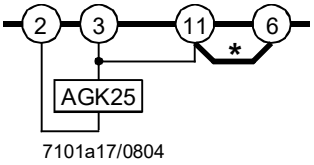

* Note!
Different from LGB.

Only for burner with fan control via auxiliary contactor (HS) with air pressure switch (LP)

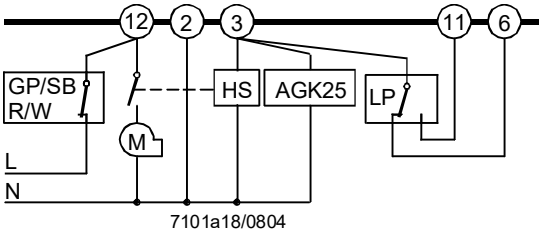

Caution!
The connection diagrams shown are merely examples which must be verified in the individual case depending on the application!

Control of actuators of 2-stage or 2-stage modulating burners. Controlled prepurging with low-fire air volume. Same low-fire actuator position during startup and operation.

For information about actuators (SA)::
SQN3: Refer to Data Sheet N7808
SQN7: Refer to Data Sheet N7804
SQN9: Refer to Data Sheet N7806

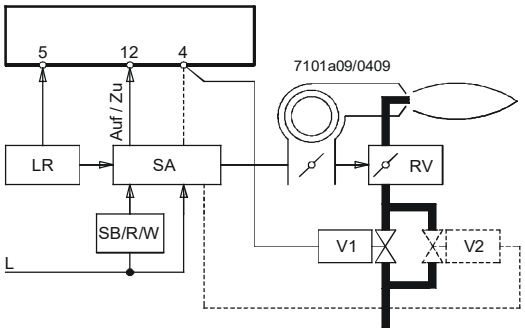

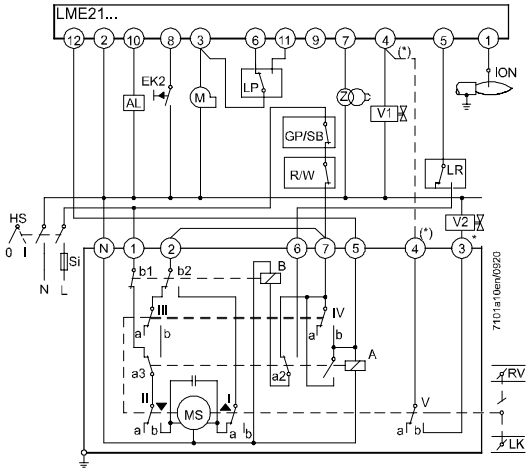

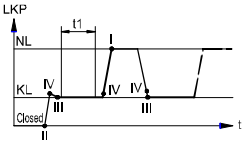

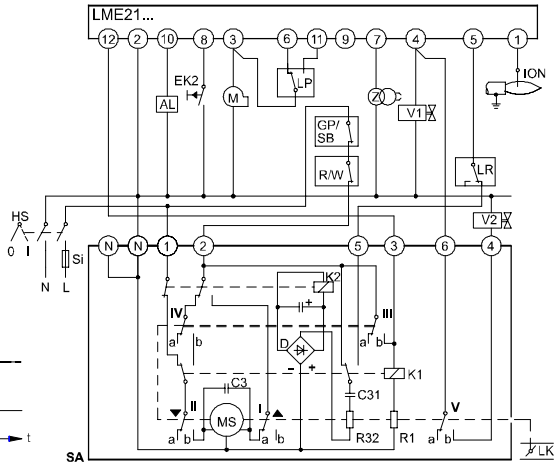

SQN3x.121xx / 2-stage control

SQN91.140xx / 2-stage control

*** Note**
With 2-stage modulating burners (with gas regulation damper (RV)), fuel valve (V2) and the dotted connection between terminals (*) are not required.

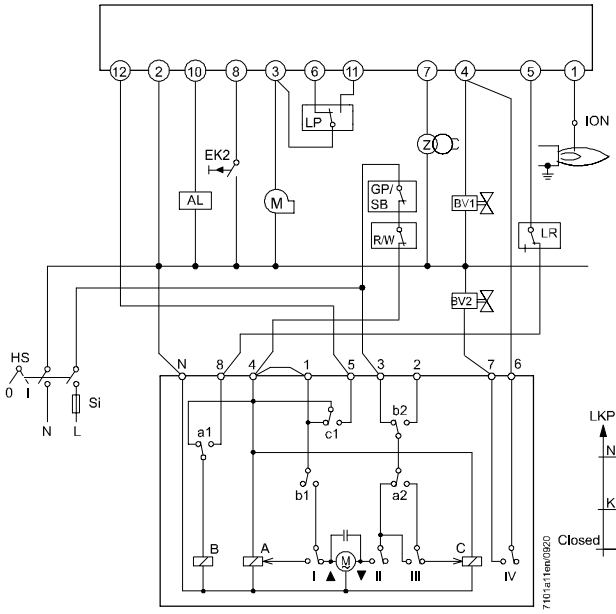

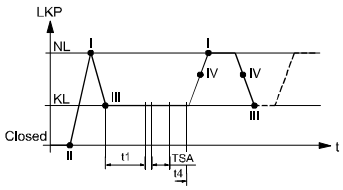

SQN7x.244xx / 2-stage control

Caution!
Risk of damage to the switching contacts!
If the external primary fuse (Si) is blown due to overload or short-circuit at the terminals, the LME must be replaced.

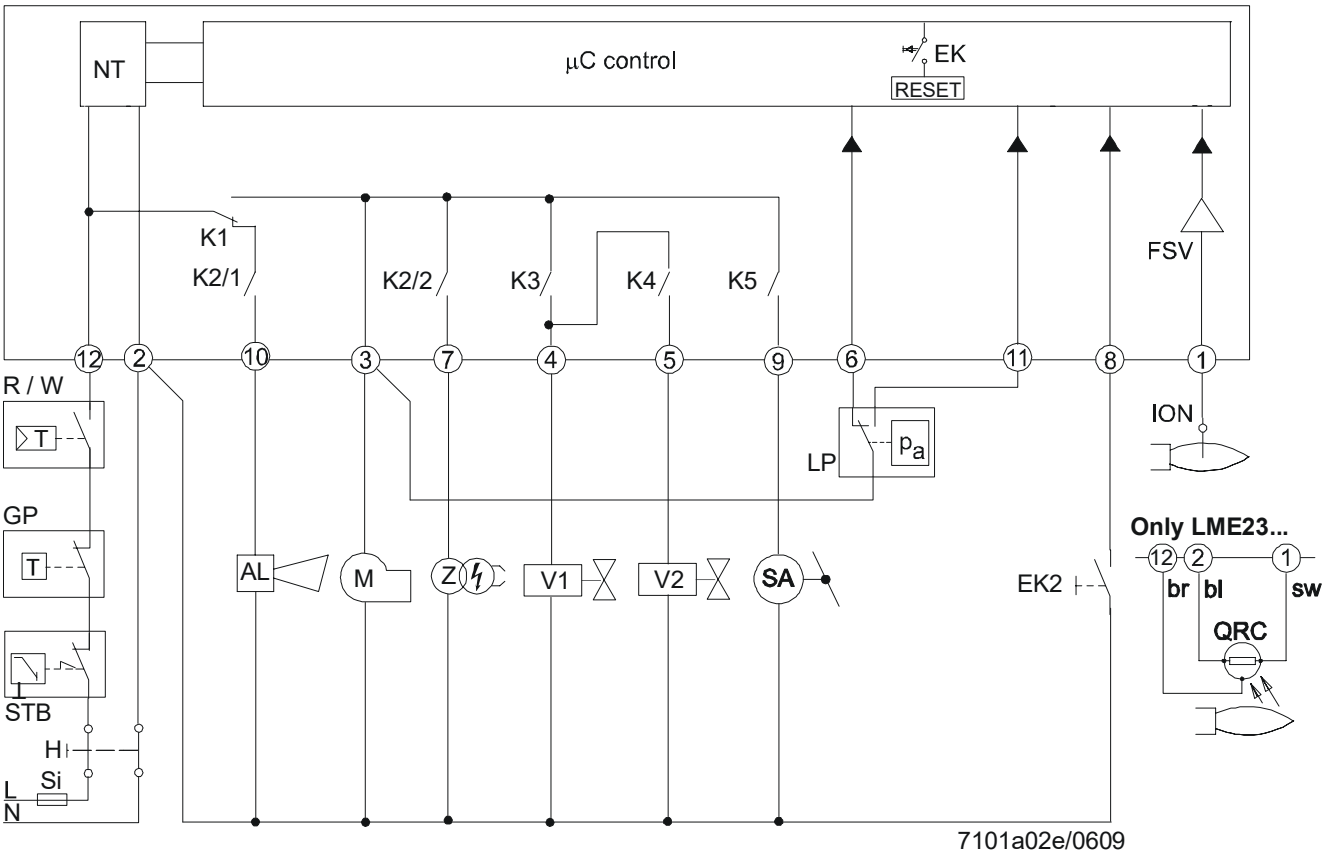

Caution!
Risk of damage to the switching contacts!
If the external primary fuse (Si) is blown due to overload or short-circuit at the terminals, the LME must be replaced.

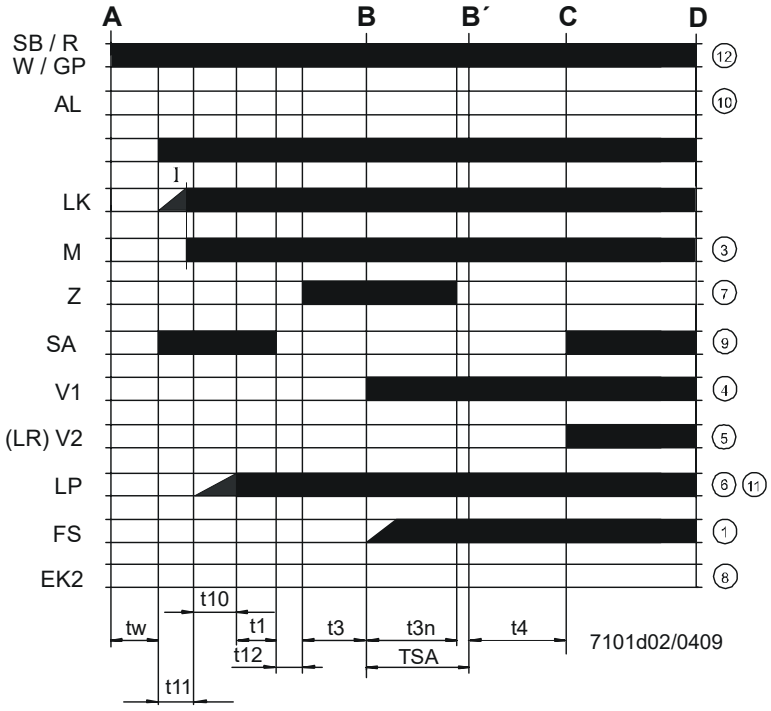

The function diagram shows the required or permissible input signals for the control sequences and the flame supervision circuit (refer to ‘Connection diagram’). If these input signals are not present, the burner control stops the startup sequence to trigger a lockout where required (safety shutdown).

Caution!
The connection diagrams shown are merely examples which must be verified in the individual case depending on the application!

Control of actuators of 2-stage or 2-stage modulating burners. Controlled prepurging (t1) with high-fire air volume.

For information about actuators:
SQN3: Refer to Data Sheet N7808
SQN7: Refer to Data Sheet N7804
SQN9: Refer to Data Sheet N7806

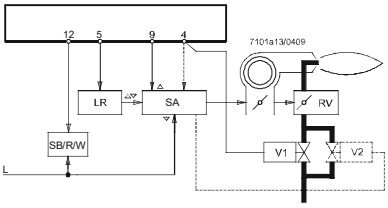

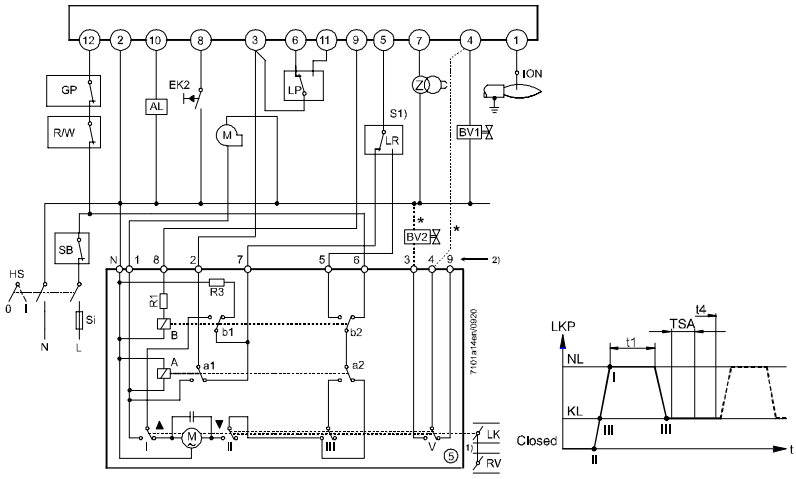

SQN3x.151xx or SQN3x.251xx

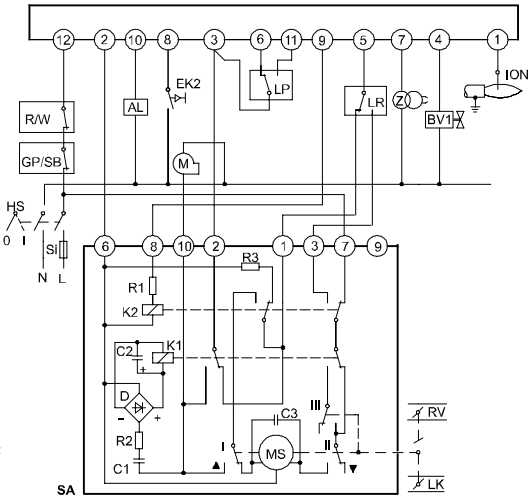

SQN90.220xx / 2-stage modulating control

*** Note**
With 2-stage modulating burners (with gas regulation damper (RV)), fuel valve (V2) and the dotted connection between terminals (*) are not required.

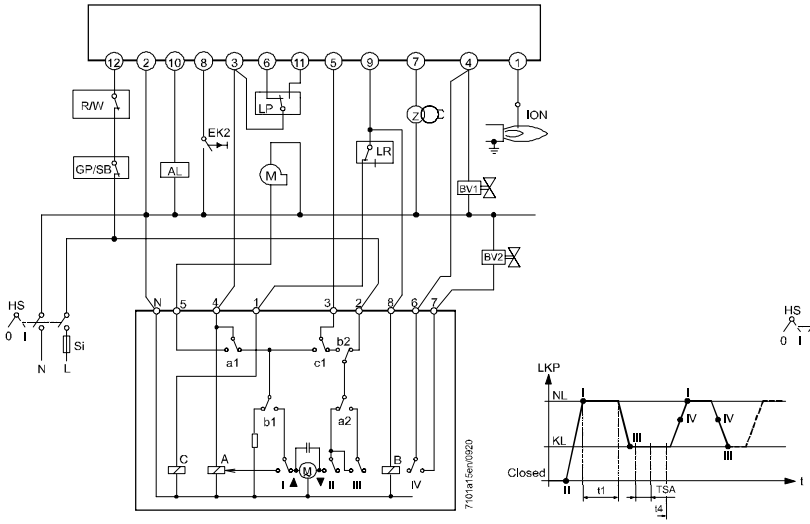

SQN7x.454xx / 2-stage control
1-wire control

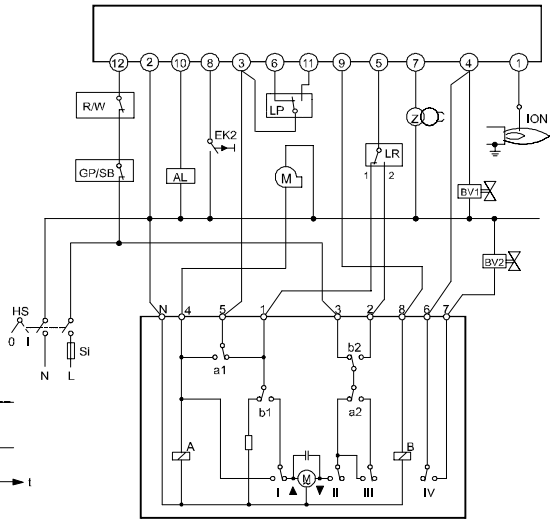

SQN7x.424xx / 2-stage control
2-wire control

Caution!
Risk of damage to the switching contacts!
If the external primary fuse (Si) is blown due to overload or short-circuit at the terminals, the LME must be replaced.

- LME21.xxxC / LME22.xxxC with LDU11 valve supervision system
- Valve supervision before startup of burner
- With plants without vent pipe to atmosphere

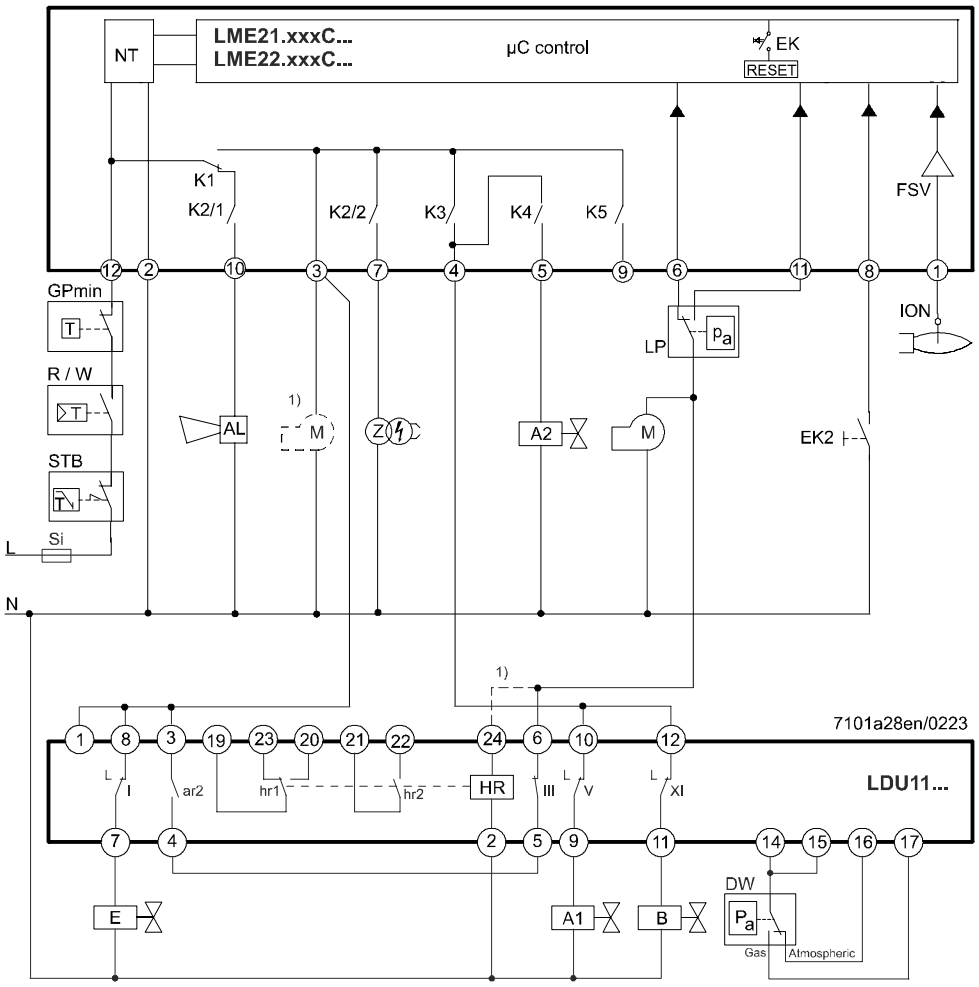

Caution!
Risk of damage to the switching contacts!
If the external primary fuse (Si) is blown due to overload or short-circuit at the terminals, the LME must be replaced.

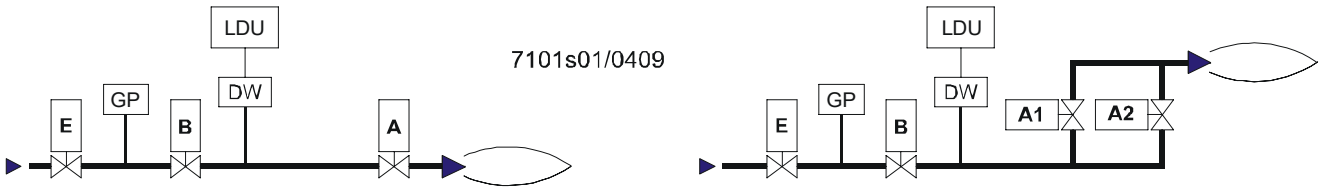

1) In connection with fan motor to terminal 3 of the LME21.xxxC/LME22.xxxC

- Start valve proving each startup, with connection of terminal 3, after controller ON or after lockout
- The valve proving after each lockout of the LDU11 can take up to 160 seconds. Therefore, the maximum permissible air pressure switch flame-out time is 180 seconds
- With the LDU11, faults during valve proving lead to lockout and, with the LME21.xxxCx, to a non-alterable lockout due to air pressure switch timeout (blink code 3)

☞ Note!

- A faulty air pressure switch (air pressure switch does not close) leads to a non-alterable lockout (blink code 3) on completion of the pressure switch response time of 180 seconds and can only be distinguished from a non-alterable lockout due to faulty valve proving because the LDU11 did not go to lockout

- The fan motor can either be connected to terminal 3 in connection with a bridge between terminal 6 and terminal 24 of the LDU11 (fan motor active during valve proving) or to terminal 6 of the LDU11 (fan motor active after successful valve proving).

- LME21.xxxC / LME22.xxxC with LDU11 valve supervision system
- Valve supervision before startup of burner
- With plants with vent pipe to atmosphere

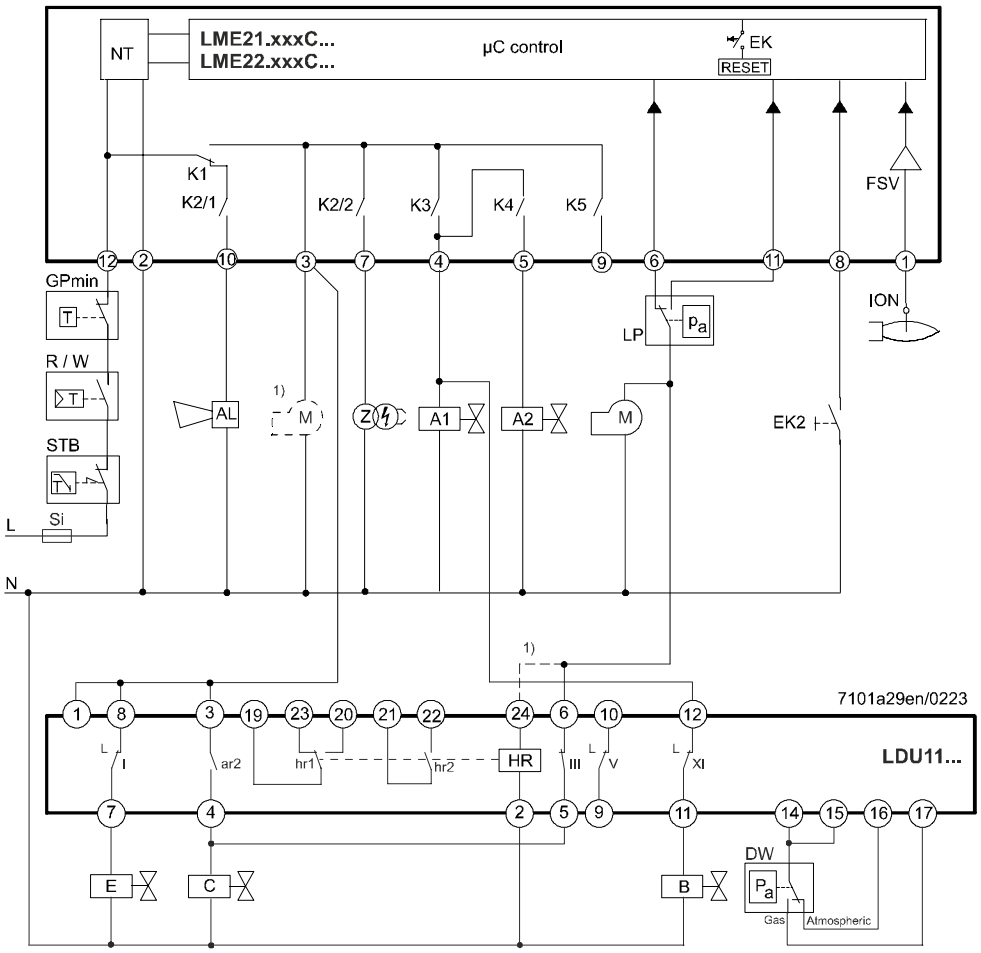

Caution!
Risk of damage to the switching contacts!
If the external primary fuse (Si) is blown due to overload or short-circuit at the terminals, the LME must be replaced.

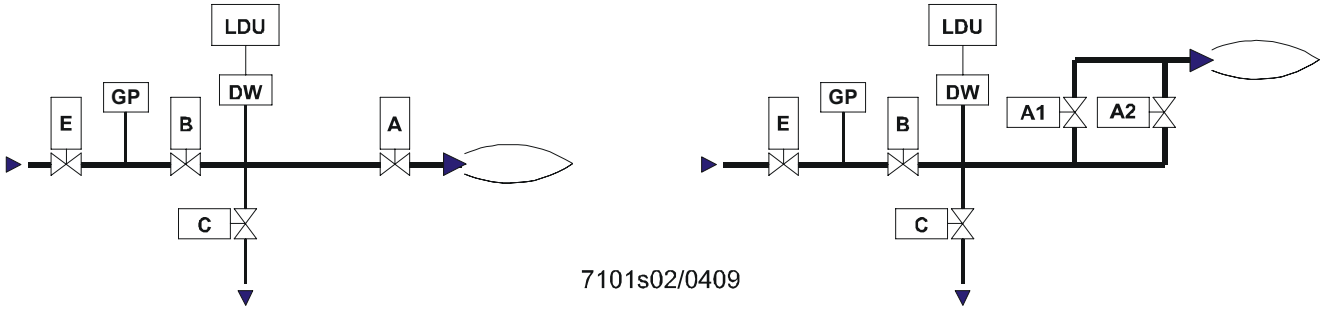

1) With fan motor connected to terminal 3 of the LME21.xxxC / LME22.xxxC

- Start valve proving each startup, with connection of terminal 3, after controller ON or after lockout
- The valve proving after a lockout of the LDU11 can take up to 160 seconds. Therefore, the maximum permissible air pressure switch flame-out time is 180 seconds
- With the LDU11, faults during valve proving lead to lockout and, with the LME21.xxxCx, to a non-alterable lockout due to air pressure switch timeout (blink code 3)

Note!

- A faulty air pressure switch (air pressure switch does not close) leads to a non-alterable lockout (blink code 3) on completion of the pressure switch response time of 180 seconds and can only be distinguished from a non-alterable lockout due to faulty valve proving because the LDU11 did not go to lockout

- The fan motor can either be connected to terminal 3 in connection with a bridge between terminal 6 and terminal 24 of the LDU11 (fan motor active during valve proving) or to terminal 6 of the LDU11 (fan motor active after successful valve proving)

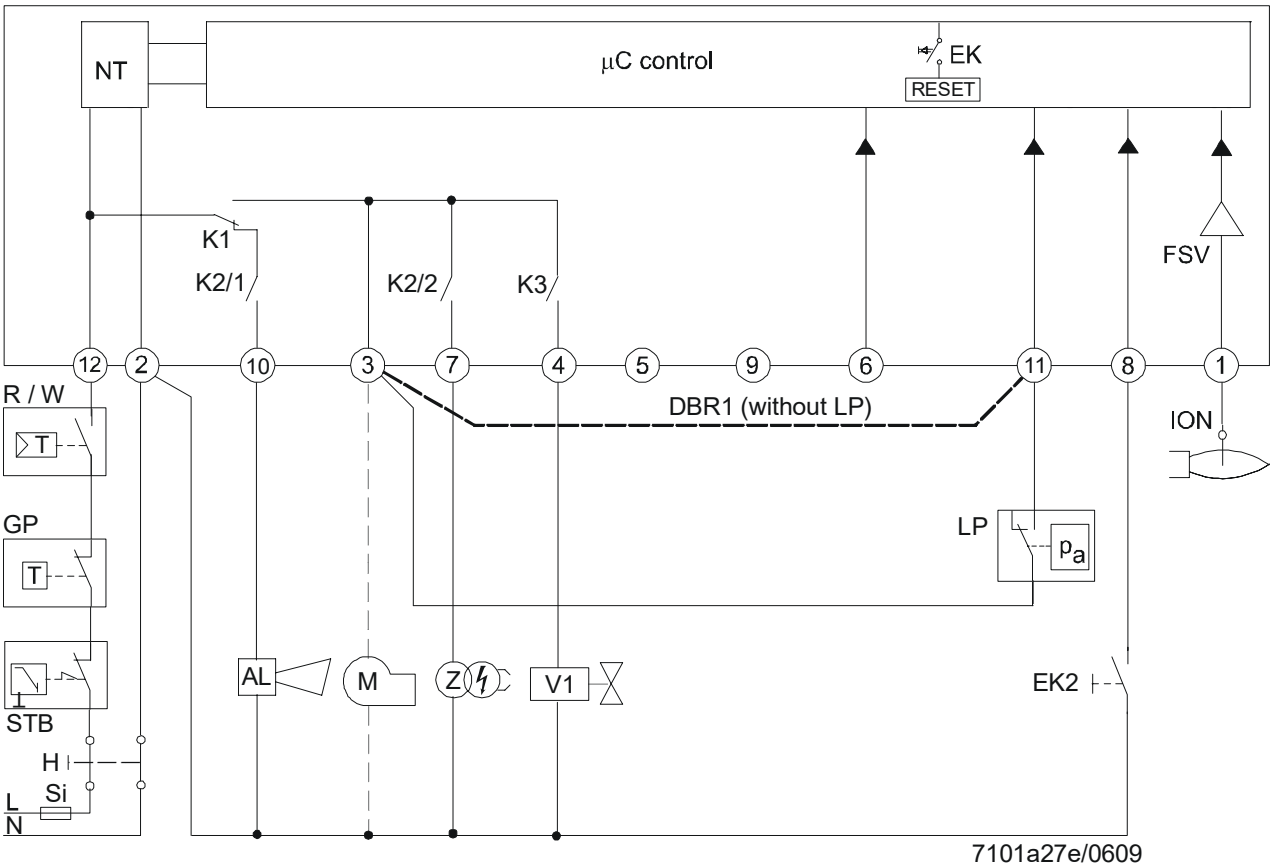

Caution!
Risk of damage to the switching contacts!
If the external primary fuse (Si) is blown due to overload or short-circuit at the terminals, the LME must be replaced.

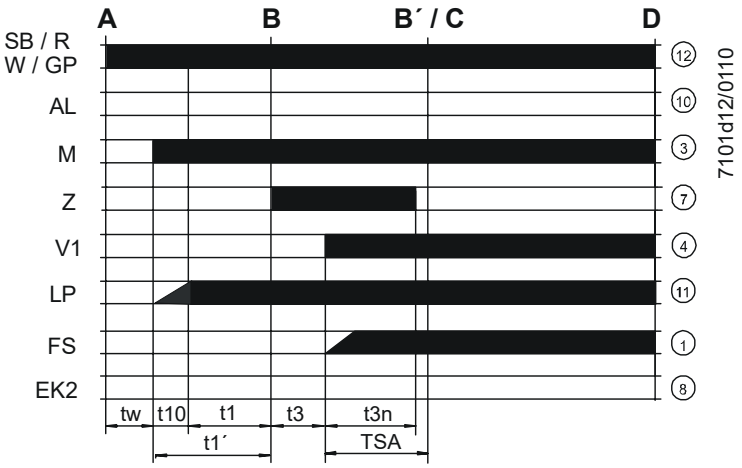

The function diagram shows the required or permissible input signals for the control sequences and the flame supervision circuit (refer to ‘Connection diagram’). If these input signals are not present, the burner control stops the startup sequence to trigger a lockout where required (safety shutdown).

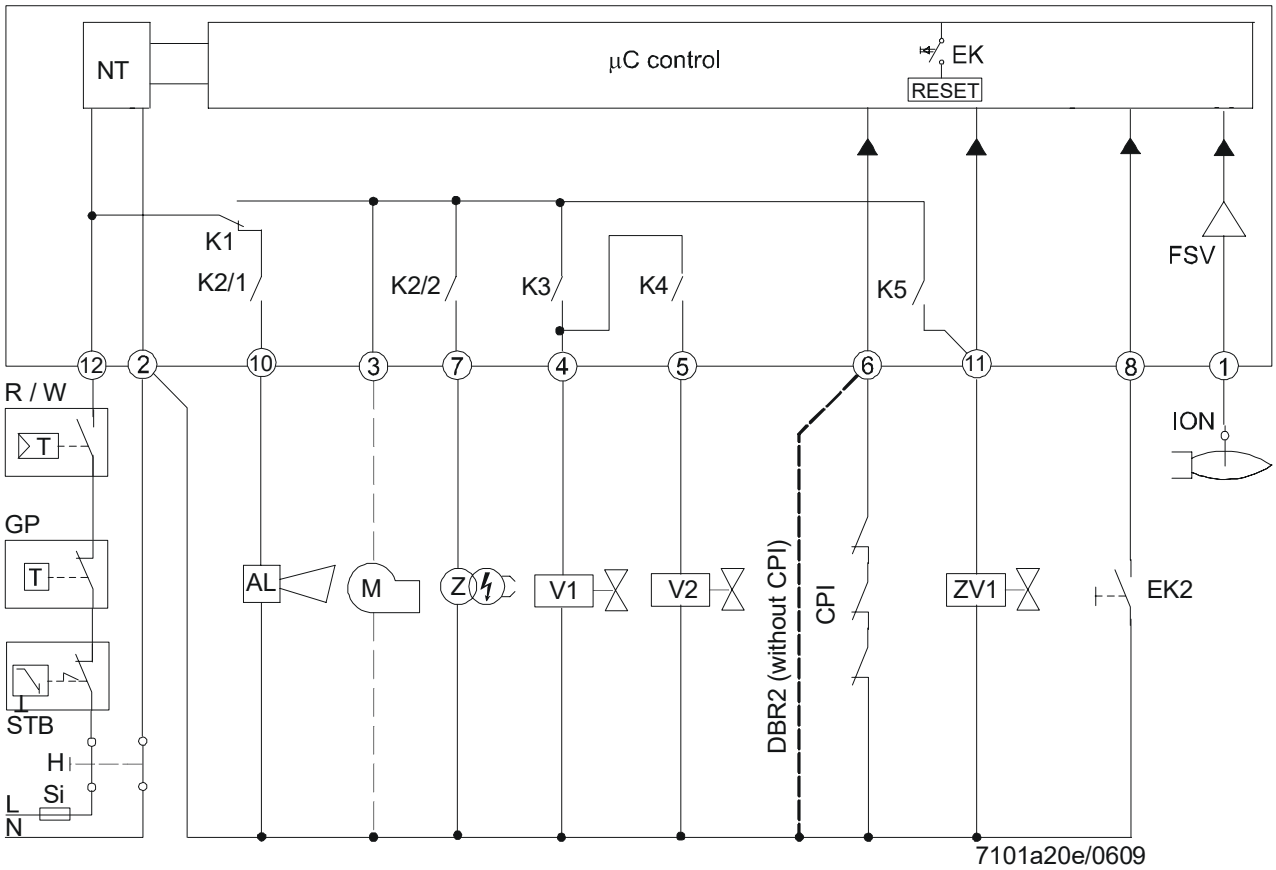

Caution!
Risk of damage to the switching contacts!
If the external primary fuse (Si) is blown due to overload or short-circuit at the terminals, the LME must be replaced.

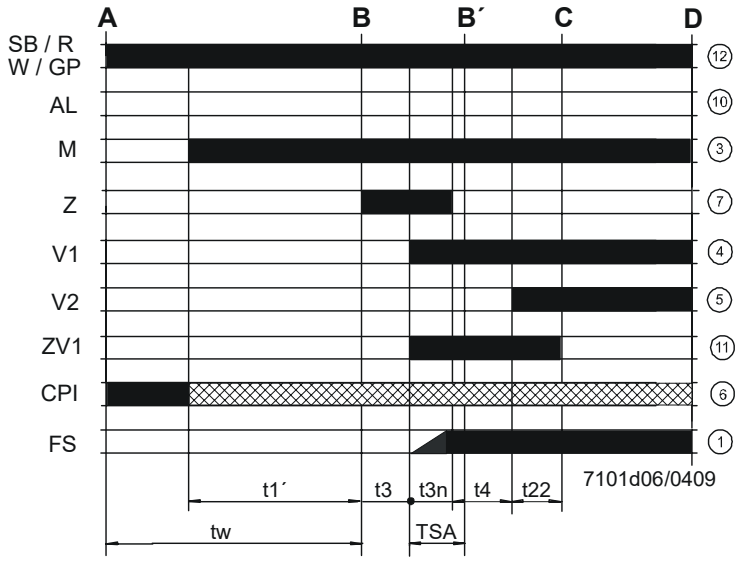

The function diagram shows the required or permissible input signals for the control sequences and the flame supervision circuit (refer to ‘Connection diagram’). If these input signals are not present, the burner control stops the startup sequence to trigger a lockout where required (safety shutdown).

AGK25	PTC resistor
AL	Error message (alarm)
Vx	Fuel valve
CPI	Closed Position Indicator
DBRx	Wire link
DW	Pressure switch valve proving
EK	Lockout reset button (internal)
EK2	Remote lockout reset button
FS	Flame signal
FSV	Flame signal amplifier
GP	Gas pressure switch
H	Main switch
HS	Auxiliary contactor, relay
ION	Ionization probe
K1...4	Internal relays
KL	Low-fire
LK	Air damper
LKP	Air damper position
LP	Air pressure switch
LR	Load controller
M	Fan motor
MS	Synchronous motor
NL	High-fire
NT	Power supply
QRAx	UV flame detector QRA2 / QRA2(1) / QRA2(2) / QRA2.9 / QRA4.U / QRA10.C
QRC1	Blue-flame detector (bl = blue, br = brown, sw = black)
R	Control thermostat/pressurestat
RV	Gas regulation damper
SA	Actuator SQN
SB	Safety limiter
Si	External pre-fuse
STB	Safety limit thermostat
t	Time
W	Limit thermostat/pressure switch
Z	Ignition transformer
ZV	Extra valve
A	Start command (switching on by control thermostat or pressurestat)
B-B´	Interval for establishment of flame
C	Operating position of burner reached
C-D	Burner operation (generation of heat)
D	Controlled shutdown by control thermostat or pressurestat • Burner will immediately be shut down • Burner control will immediately be ready for new startup
I	Cam I actuator
t1	Prepurge time
t1´	Purge time
t3	Preignition time
t3n	Postignition time
t4	Interval between ignition OFF and release of fuel valve V2
t10	Specified time for air pressure signal
t11	Programmed opening time for actuator
t12	Programmed closing time for actuator
t22	Safety time
TSA	Ignition safety time
tw	Waiting time
■	Input signal / output signal 1 (ON)
□	Input signal / output signal 0 (OFF)
▨	Input permissible signal 1 (ON) or 0 (OFF)

Dimensions in mm

LME

Plug-in base AGK11...

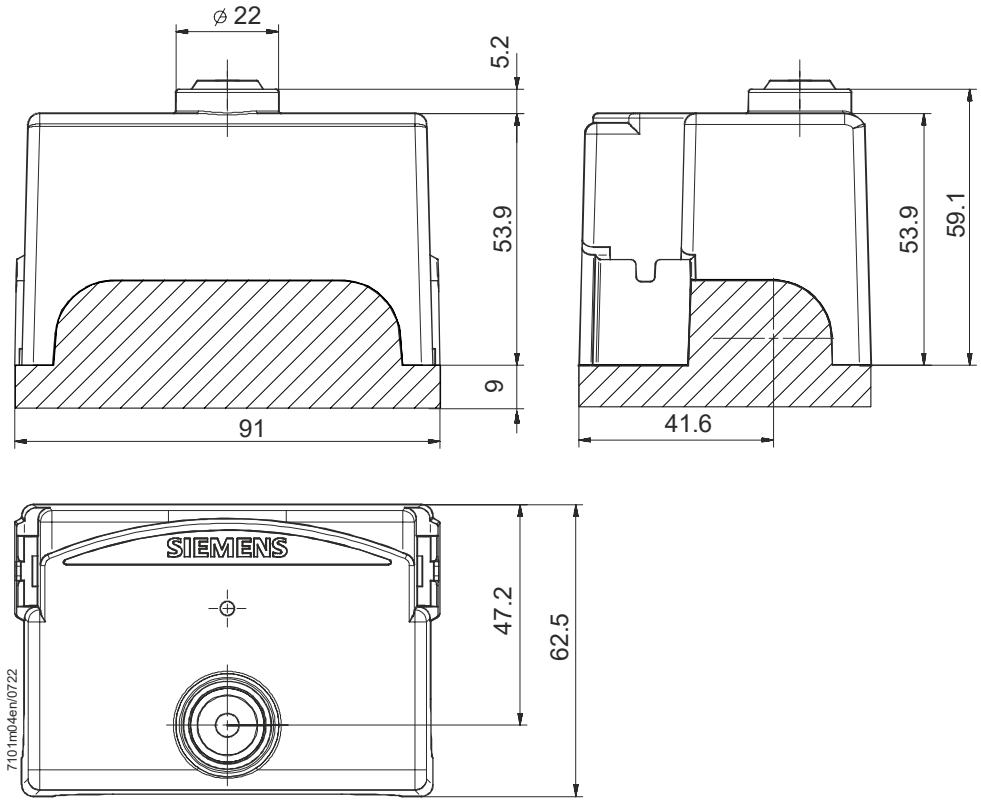

LME with extension of lockout reset button AGK20

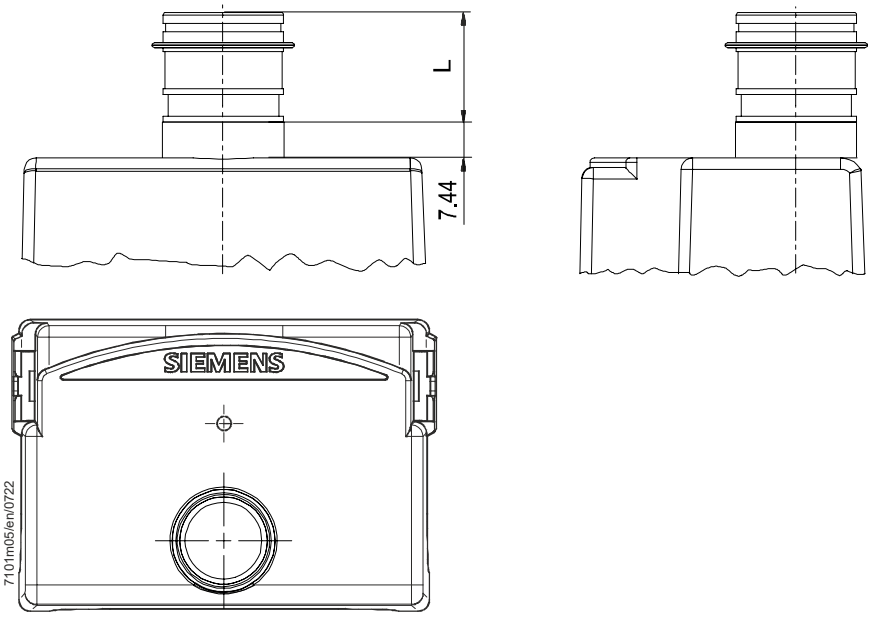

Product no.	Length (L) in mm
AGK20.19	19
AGK20.43	43
AGK20.55	55

Dimensions in mm

Ancillary unit
AGQ3.xA27

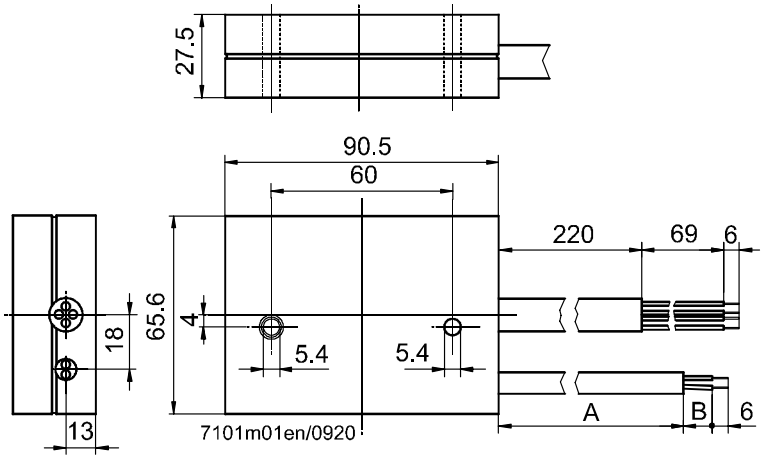

Product no.	Dimensions	
	A	B
AGQ3.1A27	500	19
AGQ3.2A27	300	34

© 2024 Siemens AG Smart Infrastructure, Berliner Ring 23, D-76437 Rastatt
Subject to change!