Technical data sheet
Signaling column element
Part no.: 50141868
A7-V1-DS-Y-T

Figure can vary

Contents

- Technical data
- Dimensioned drawings
- Notes
- Accessories

ПРОМЭЛЕКТРОНИКА / sales@prom-elec.com

Technical data

Basic data

Series	A7
Suitable for	Signaling column elements of the A7 – Advanced Series
Type of signaling	Optical

Electrical data

Life expectancy	> 100,000 h

Performance data

Supply voltage U_B	24 V, DC, 10 %
Current consumption, max.	50 mA

Connection

Notes	Protected against accidental inter-changes: Actuation of the colors is performed via PINs, thus, the calotte position can be freely selected (see operating instructions).

Mechanical data

Design	Cylindrical
Dimension (Ø x L)	70 mm x 50 mm
Housing material	Plastic
Net weight	109 g
Type of fastening	Bayonet system
Type of illuminant	LED/24V
Signal image	Continuous light
Lens color	Yellow
Angle of radiation	360°

Environmental data

Ambient temperature, operation	-10 ... 60 °C

Certifications

Degree of protection	IP 66
Certifications	CE
	CSA

Classification

Customs tariff number	85318070
eCl@ss 8.0	27371220
eCl@ss 9.0	27371220
eCl@ss 10.0	27371220
eCl@ss 11.0	27371220
ETIM 5.0	EC000232
ETIM 6.0	EC000232

Dimensioned drawings

All dimensions in millimeters

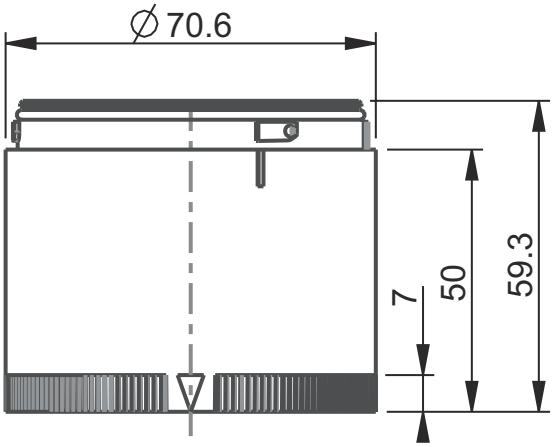

Notes

Observe intended use!

- This product is not a safety sensor and is not intended as personnel protection.
- The product may only be put into operation by competent persons.
- Only use the product in accordance with its intended use.

Accessories

Mounting

	Part no.	Designation	Article	Description
	50135463	A7-MP1-100	Signaling column element	Connection: Terminal, Tension spring technology Design: Cylindrical Diameter: 70 mm Version: Base mounting Fastening, at system: Screw type / horizontal Module holder: One side Ambient temperature: -10 ... 60 °C Degree of protection: IP 66

Note

- A list with all available accessories can be found on the Leuze website in the Download tab of the article detailed page.