–weishaupt–

product

Information on compact burners

Digital gas burners

Weishaupt gas burners WG5 to WG40 (12.5–550 kW)

ПРОМЭЛЕКТРОНИКА / sales@prom-elec.com

A burning passion for quality

Ultra-modern research and production methods, rigorous quality control, and a comprehensive service network ensure the quality for which Weishaupt is renowned

Technological progress is our motivation. It has been driving us for more than 65 years to keep setting new standards for the combustion equipment industry.

Our own Research and Development Centre is constantly working both on the development of new products and on the optimisation of existing ones.

We consider it is not only our goal but our responsibility to go above and beyond current legislative requirements to develop combustion systems which emit ever fewer pollutants, save ever more energy, and combine ecology and economy in a practical manner.

Therefore, not only do we invest in research and technology, but we also only ever work with the best materials, using the latest tools, and we carry out meticulous quality control checks.

Millions of times over, Weishaupt burners have proven to heating specialists and end users alike that they are extremely reliable, durable, environmentally friendly, and technologically advanced; a fact also borne out by our numerous prizes for design and innovation.

Burners with outputs ranging from 12.5 to 32 000 kW are manufactured at our ultra-modern facilities in Germany and every single one undergoes a mechanical and electrical function test there. It is this combination of technology and effective quality control that helps to safeguard Weishaupt's renowned reputation for quality.

A new burner is always an investment in the future. Costs always need to be well-balanced against use but, ultimately, long-term overall success depends on quality, technology and safety. Deciding on a Weishaupt burner is always a safe investment in the future.

Contents

Page

A hallmark of practical combustion technology 5

Trustworthy technology 6

Digital combustion management: reliable and easy to use 9

Burners with variable speed drive: economical and quiet 10

WG burners with VSD and/or O_2 trim 12

Optional W-FM 25 expansion modules 13

Overview of burner control, model designation 14

Use 15

WG5 – Burner selection/gas valve train sizing 16

– Technical data, order No. and extra equipment 17

WG10 – Burner selection/gas valve train sizing 18

– Technical data, order No. and extra equipment 19

WG20 – Burner selection/gas valve train sizing 20

– Technical data, order No. and extra equipment 21

WG30 – Burner selection/gas valve train sizing 22

– Technical data, order No. and extra equipment 23

WG40 – Burner selection/gas valve train sizing 24

– Technical data, order No. and extra equipment 25

Dimensions 26

Technical data 27

A hallmark of practical combustion technology

A safe investment in the future
Reliable and economical: The million-fold success of Weishaupt's compact burners is the result of an unrelenting orientation towards quality and customer satisfaction. The equipment has been continually developed and improved over decades.

The latest production methods and very stringent quality checks of all products ensure Weishaupt's reputation for quality. In choosing Weishaupt you are making a safe investment in the future.

Large capacity range
The large capacity range of 12.5 to 550 kW makes the burners suitable for a wide range of heat generators.

Digital combustion management for reliability and ease of use
Weishaupt is a pioneer in this field. Digital combustion management offers greater ease of use, simple servicing, even greater reliability in operation, and, last but not least, an extremely attractive price to capacity ratio. Furthermore, this intelligent technology enables the burner to be integrated with complex building management systems.

Electronic ignition
The ignition unit used on all Weishaupt W-series burners is very energy efficient and extremely reliable.

Flame monitoring
Flame monitoring systems are responsible for the high operational readiness and maximal safety of the burner.

Ionisation detection has been established across the entire Weishaupt gas burner range for many decades. It is one of the safest ways of monitoring gas flames, as it responds only to the flame and not to light. The self-checking W-FM 25 PO combustion manager enables ionisation to also be used for continuous firing.

Gas multifunction assembly
The burner's gas multifunction assembly incorporates the following components and functions:

- Servo-controlled governor to ensure a continual gas pressure
- 2 Class-A solenoid valves
- Filter
- Gas pressure switch

If the gas pressure falls too low, a low gas pressure program is started. The gas pressure switch also provides automatic valve proving.

Valve proving as standard with the W-FM 10 and W-FM 25 combustion managers
The low gas pressure switch is used to check the tightness of the gas valves, thereby providing valve proving without the need for any additional components or costs.

Continuous firing, VSD, and O_2 trim
The various options available with the W-FM 25 series of combustion managers used on WG 10 to WG 40 burners bring the latest technology to the compact burner segment. Innovative technology enables efficiency-optimising measures such as variable speed drive (WG 30 and above) and O_2 trim (WG 20 and above) to be produced more cost effectively.

With these technologies it is possible for investments in modulating burners to be quickly amortised. The W-FM 25 PO for continuous firing is particularly well-suited to industrial applications. Its safety features allows burners to fire for more than 24 hours without a shutdown.

Diagnosis via laptop
A laptop computer can be connected to the combustion manager, offering easy combustion optimisation and fault analysis. A package of interrogation software and connection cables is available for this.

Outstanding service
Weishaupt has an extensive worldwide sales and service network. Customer service is available around the clock. Weishaupt's optimal in-house training ensures service technicians are of the highest calibre.

Trustworthy technology

Compact construction
Remove the burner's cover and you are immediately struck by how clearly its components are arranged, and how the electrical connections are obvious and non-interchangeable. The equipment makes a very good impression, just as Weishaupt always does.

Whichever model, each WG burner's compact construction means it can be easily installed by one person, reducing installation costs to a minimum.

Low-NO_x execution
All WG burners are Low-NO_x execution as standard. A specially designed mixing head produces an intensive internal flue gas recirculation, resulting in exemplary emission levels.

Sound-attenuated air inlet
The burners have a transverse fan with a sound-attenuated air inlet and, as a consequence, are particularly quiet in operation.

Electronically controlled air damper
The electronically controlled air damper fully closes at burner shutdown to hinder the cooling down of the combustion chamber.

Servicing position
A special bracket allows the burner to be put into a servicing position, providing easy maintenance access to the burner and its mixing assembly.

Common platform
The common platform principle used with W-series burners greatly simplifies the provision and storage of spare parts.

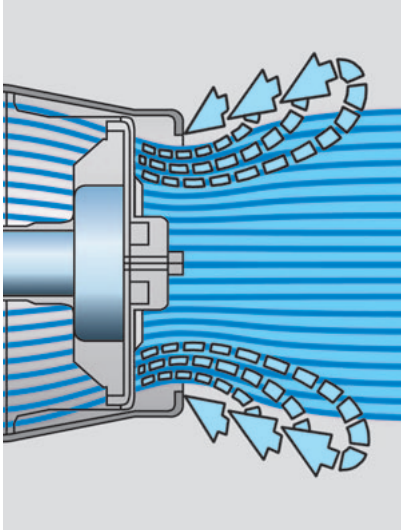

Recirculation reduces emissions

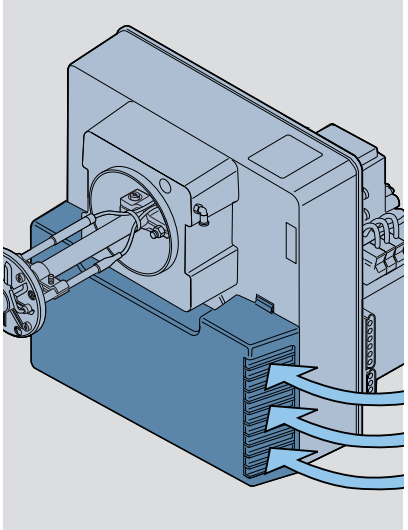

Sound-attenuating air inlet housing

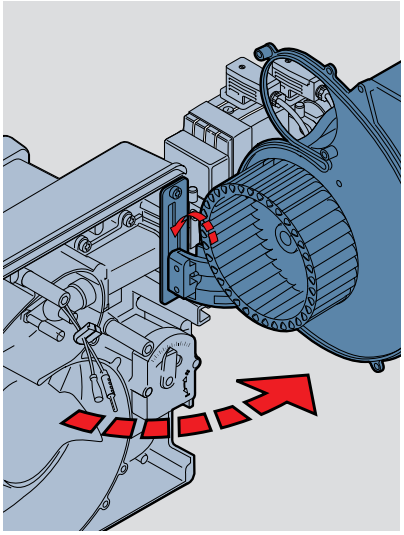

Housing with components in the servicing position: easy access to the fan wheel

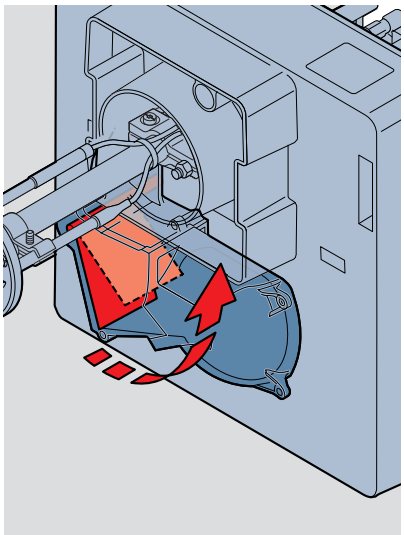

Electronically controlled air damper

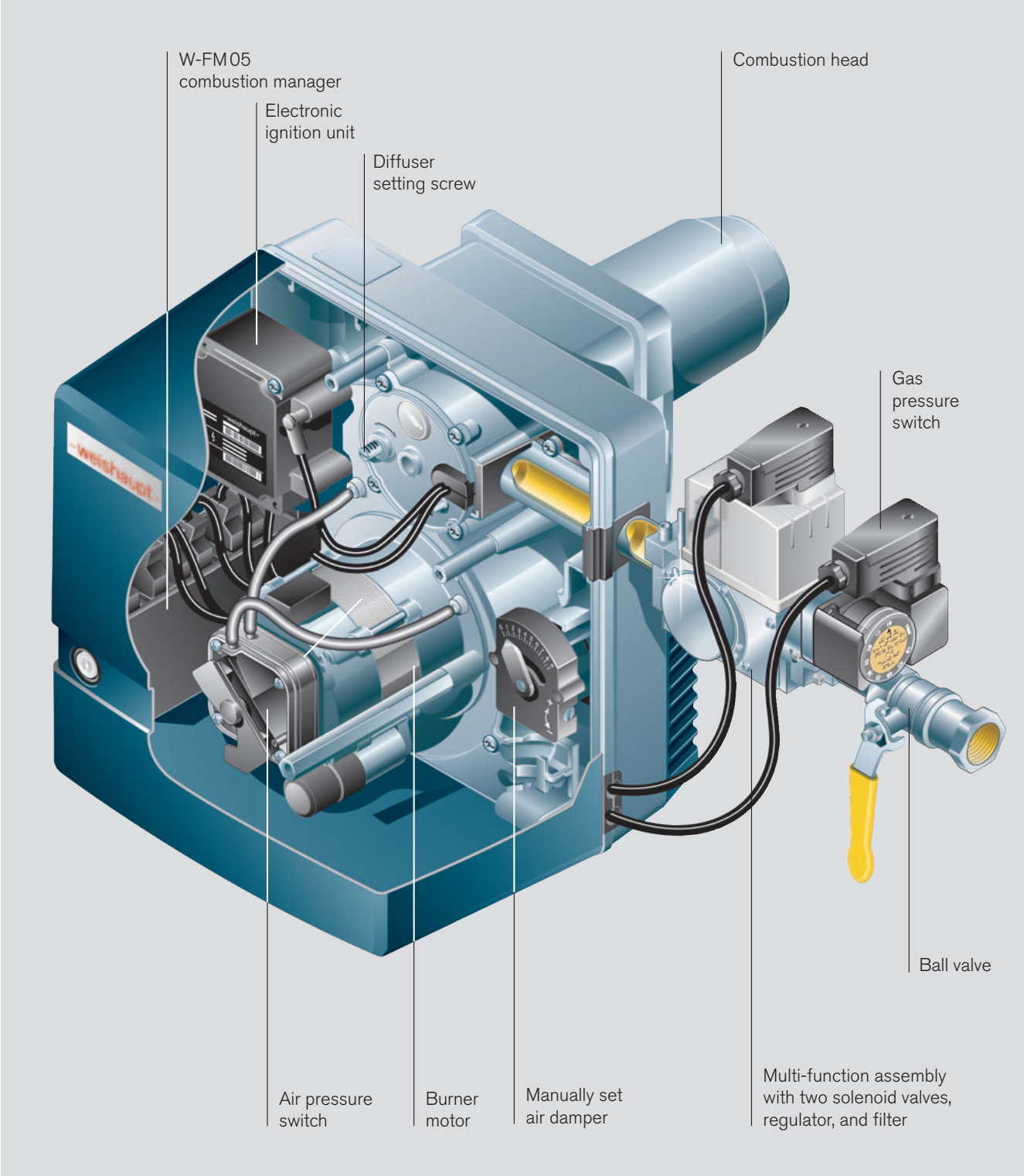
W-FM 05
combustion manager
Electronic
ignition unit
Diffuser
setting screw
Combustion head
Gas
pressure
switch
Ball valve
Air pressure
switch
Burner
motor
Manually set
air damper
Multi-function assembly
with two solenoid valves,
regulator, and filter

Low-NO_x WG5

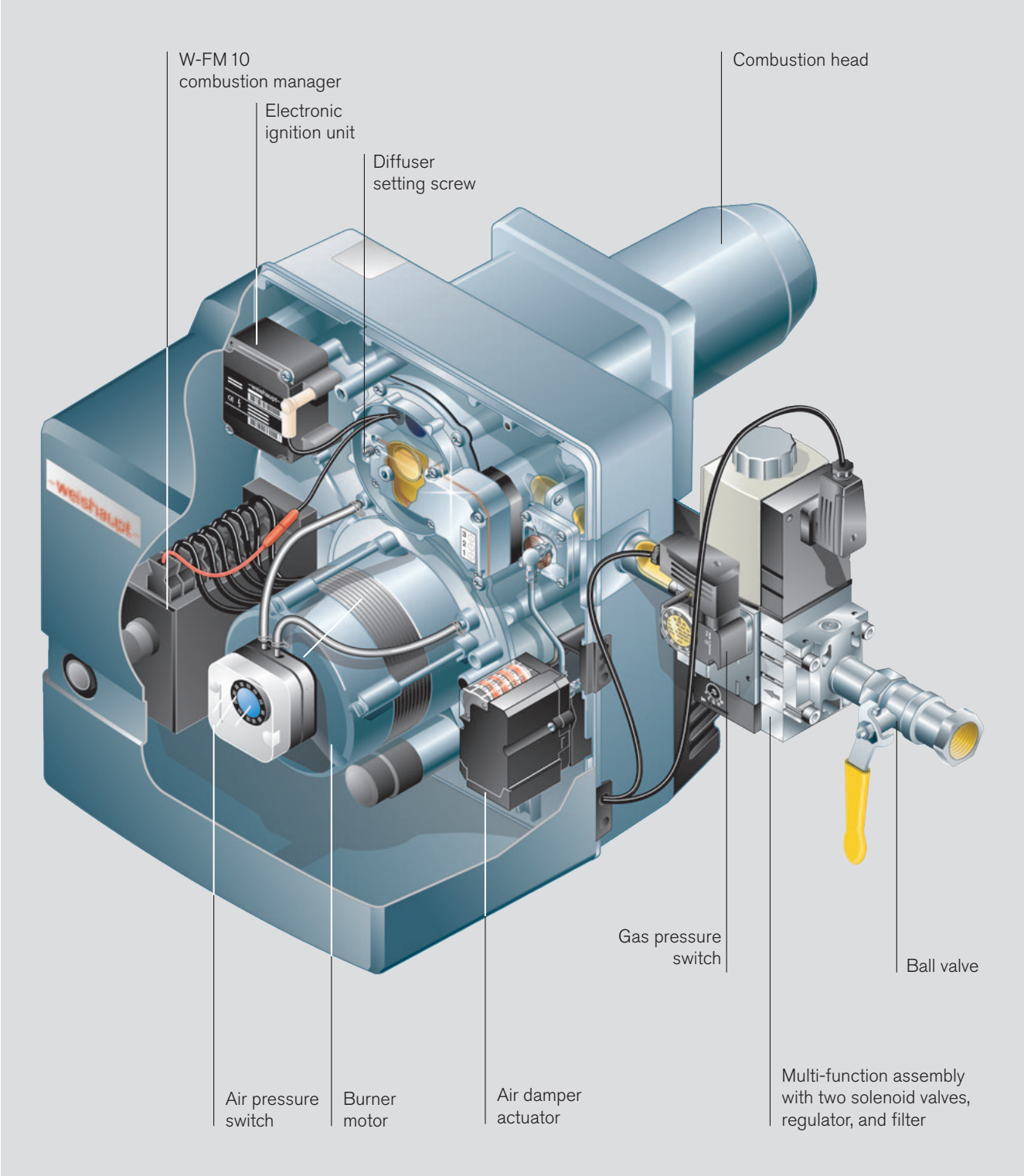

Low-NO_x WG20 in two-stage execution

Digital combustion management: reliable and easy to use

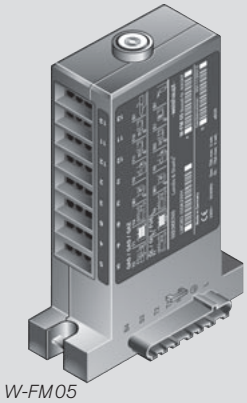

W-FM 05

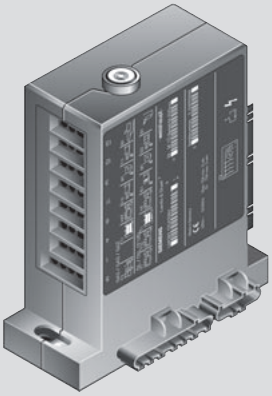

W-FM 10

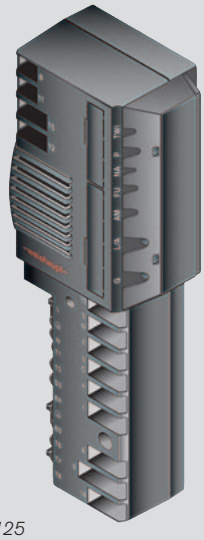

W-FM 25

All of Weishaupt's W-series burners are fitted as standard with a digital combustion manager. The unit's microprocessors control and monitor all burner functions. As a result, Weishaupt burners are easy to use, precise, and reliable.

The digital combustion manager also offers the possibility of communicating with other systems via an integrated bus connection. This allows a technician to monitor the operation of the burner and remotely diagnose any errors.

Combustion manager	W-FM 05	W-FM 10	W-FM 25
Fuels			
Gaseous	●	●	●
Liquid (distillate)	●	●	●
Gaseous / liquid (distillate)	–	–	●
Features			
Combustion manager for intermittent firing	●	●	●
Combustion manager for continuous firing > 24 h	–	–	○ [1]
Integrated gas valve proving	–	●	●
Maximum number of actuators	1	1	2
Actuators with stepping motor	–	–	2
Maximum number of compound settings	–	–	2
Flame monitoring	Ion	Ion	Ion
Fuel metering via input pulse	–	–	●
Service software	ACS 401	ACS 401	Vision Box
Efficiency optimisation			
Variable speed drive	–	–	○
O_2 trim	–	–	○ [2]
Control			
Stage switching inputs (thermostat / pressure control)	●	●	●
Three-term switching input	–	–	●
0 / 4–20 mA or 0 / 2–10 V analogue input / output	–	–	○ [2]
Bus systems			
eBus	●	●	–
Modbus-RTU	–	–	○ [3]
Profibus	–	–	○ [3]
Controls positioning			
Burner-mounted combustion manager	●	●	●
Removable control unit	–	–	10 m
Electrical supply			
120 V, 50 Hz / 60 Hz	●	●	●
230 V, 50 Hz / 60 Hz	●	●	●
Approvals			
Europe CE (230 V / 50 Hz)	●	●	●
Australia AGA (240 V / 50 Hz)	–	–	●
USA / Canada CSA (120 V / 60 Hz)	–	–	●

● Standard ○ Optional [1] PO version [2] PO O_2 version
[3] With EM3/3 expansion module [4] With EM3/2 expansion module

Burners with variable speed drive: economical and quiet

Variable speed drive (VSD)
Whereas a burner motor is usually run at a constant speed, the speed of the motor on VSD-equipped WG30 and WG40 burners is variable and depends on the prevailing burner load. The VSD is electronically controlled by the digital combustion manager.

VSD offers the twin advantages of a reduction in electrical consumption and considerably reduced noise levels when firing at partial load.

The reduced noise levels are of particular practical benefit. A 10 dB reduction in the sound level can be achieved at 50 % burner load, which equates to a halving of noise emissions.

The Weishaupt W-FM25 combustion manager uses a frequency convertor and inductive pulse generator to control and monitor the speed of the fan. Electronic compound regulation enables the gas and air volumes to be set independently of one another.

A special feature of this execution is the ease with which the gas/air compound can be set for standard heat generators and the adaptability for thermal process plant.

Benefits
- Electrical energy savings
- Reduction in burner noise emissions
- Capacity range identical to that of the standard, fixed-speed burners
- Speed monitoring via inductive pulse generator
- 230 V three-phase motor
- Gas butterfly valve, air damper, and frequency convertor are in electronic compound
- Air volume can be adjusted via diffuser position, air damper position, and fan speed
- Separate ignition load setting
- High-precision, digital control
- Hinged flange for easy handling
- Good price/performance relationship

Economical and quiet with VSD

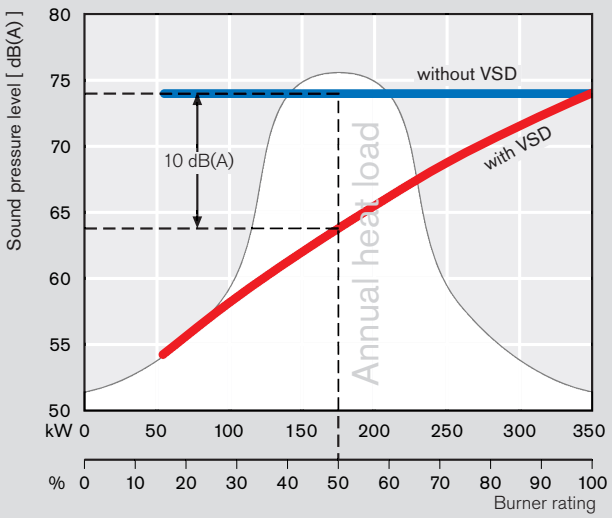

Typical reduction in sound pressure level for a WG30 gas burner

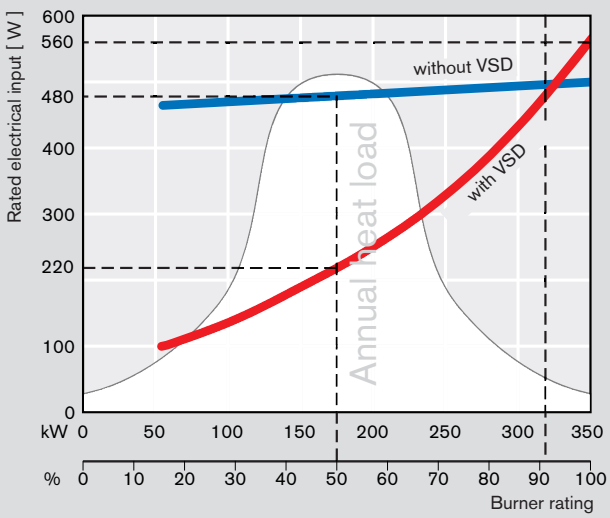

Typical reduction in rated electrical input for a WG30 gas burner

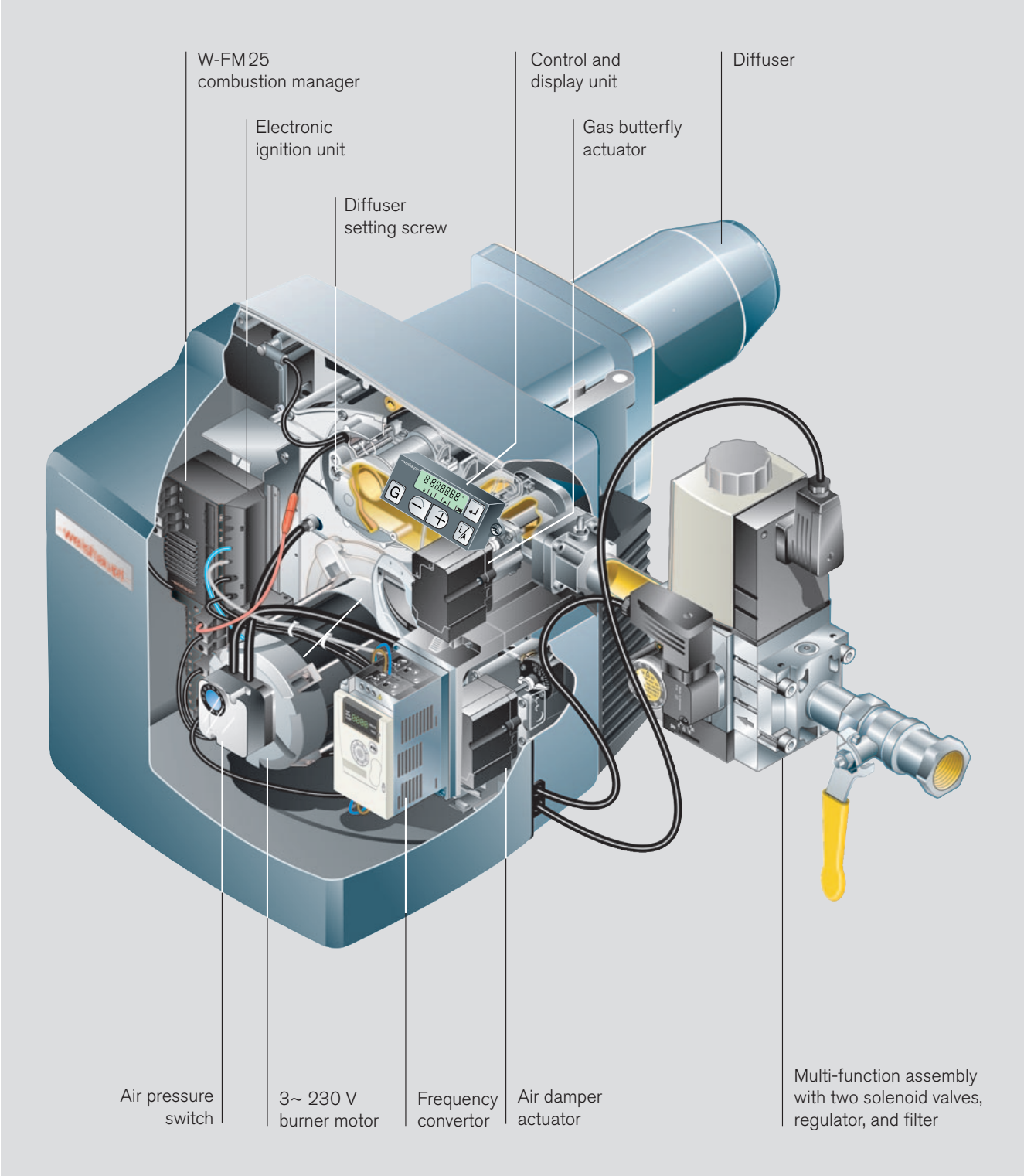

Low-NO_x WG30 with VSD

WG30–40 with VSD and/or O_2 trim
WG20–40 with O_2 trim

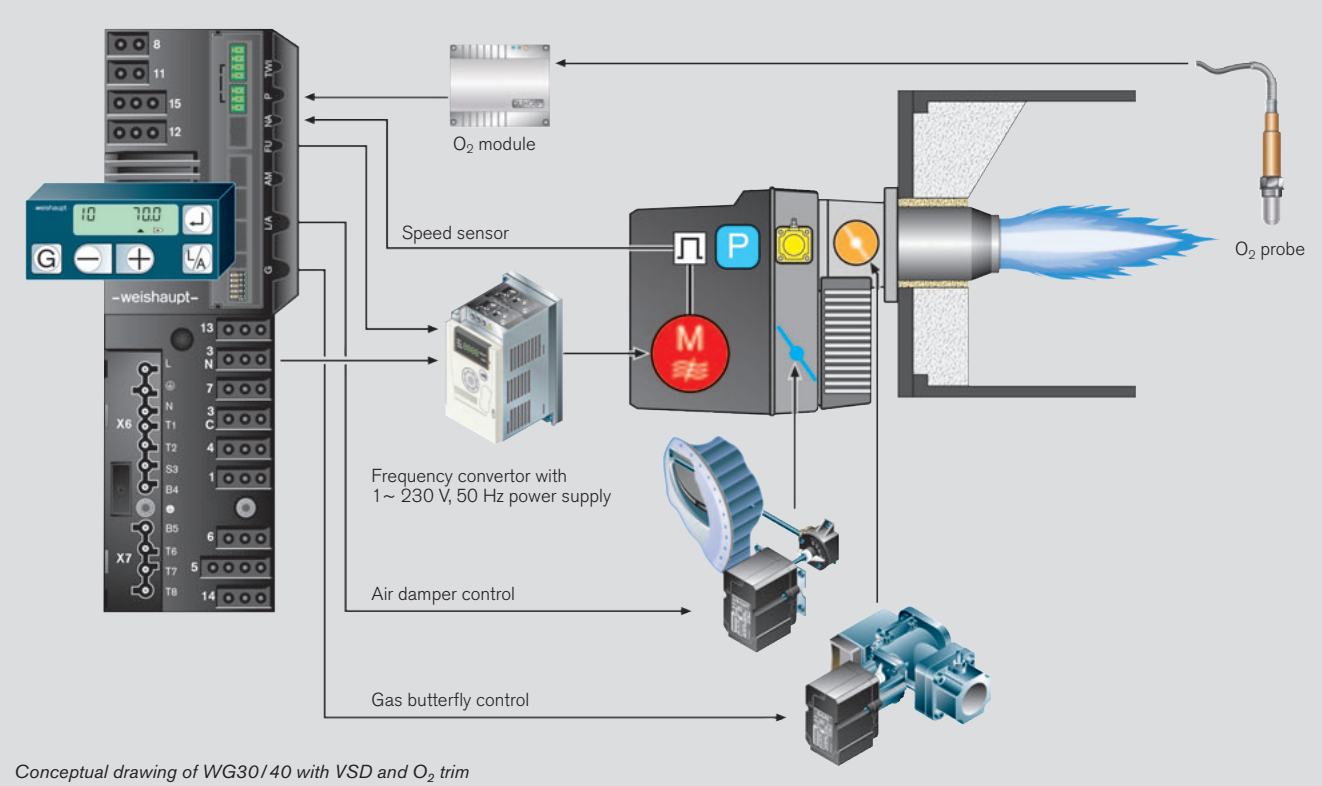

Conceptual drawing of WG30/40 with VSD and O_2 trim

The key points:

- The utilisation of identical units for gas and oil-fired burners helps simplify commissioning and reduces the number of spares required.
- Non-interchangeable plugs ensure the correct electrical connection of all components
- Electrical remote reset is possible
- Flame monitoring via ionisation probe
- Safety is ensured by the reciprocal monitoring of two microprocessors
- LCD screen with interrogation, service, and parameterisation functions. The burner can be set directly via the operating keys (WG10–40, version ZM-LN)
- W-FM 25 for continuous firing, VSD, and O_2 trim
- Air damper and frequency convertor in electronic compound
- Adjustment of the O_2 setpoint curve and the minimum and maximum O_2 monitoring threshold
- Air volume can be adjusted via diffuser position, air damper position, and fan speed
- Separate ignition load setting
- High-precision, digital control
- Optional expansion modules with either a Modbus interface or analogue and digital inputs and outputs
- The separate PC connection offers, through the use of the Vision Box software, additional options such as:
  – Setting of the pre-purge time
  – Display of the operational sequence and the adjustment of functional parameters

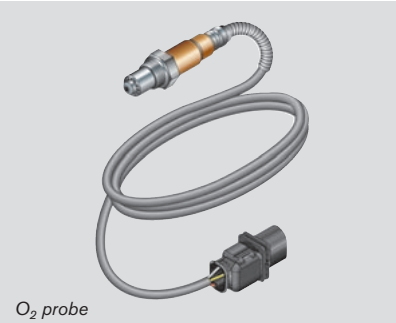

O_2 probe

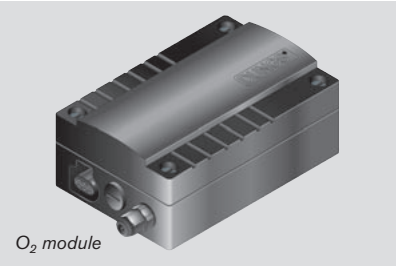

O_2 module

Optional W-FM 25 expansion modules

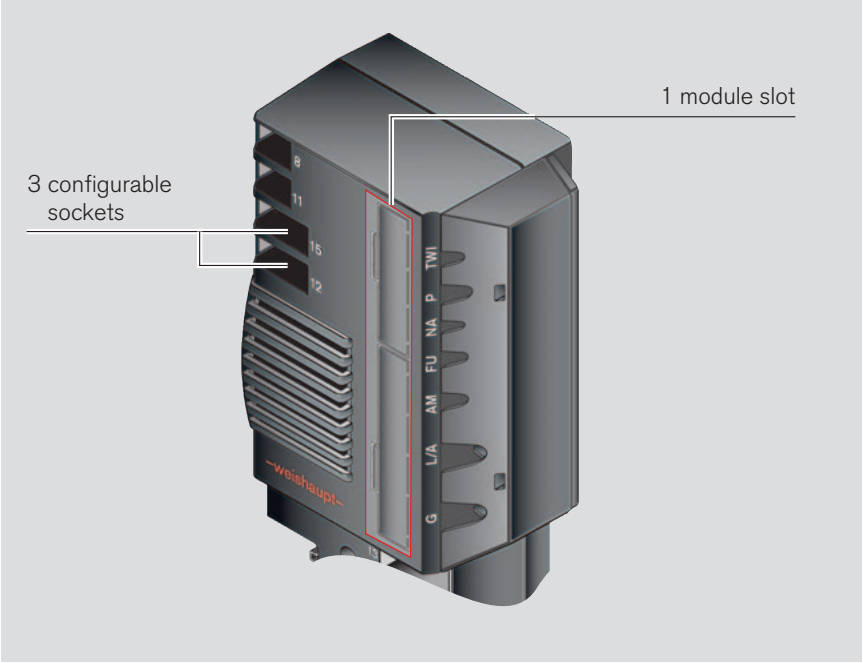

W-FM 25 combustion manager

- Configurable inputs (summary)
  Socket 12
  – VPS valve proving
  – Proof of valve closure (POC)

  Socket 14
  – Remote reset
  – Start release
  – Contact-dependent post-purge

  Socket 15
  – High gas pressure switch
  – Extraneous air pressure switch

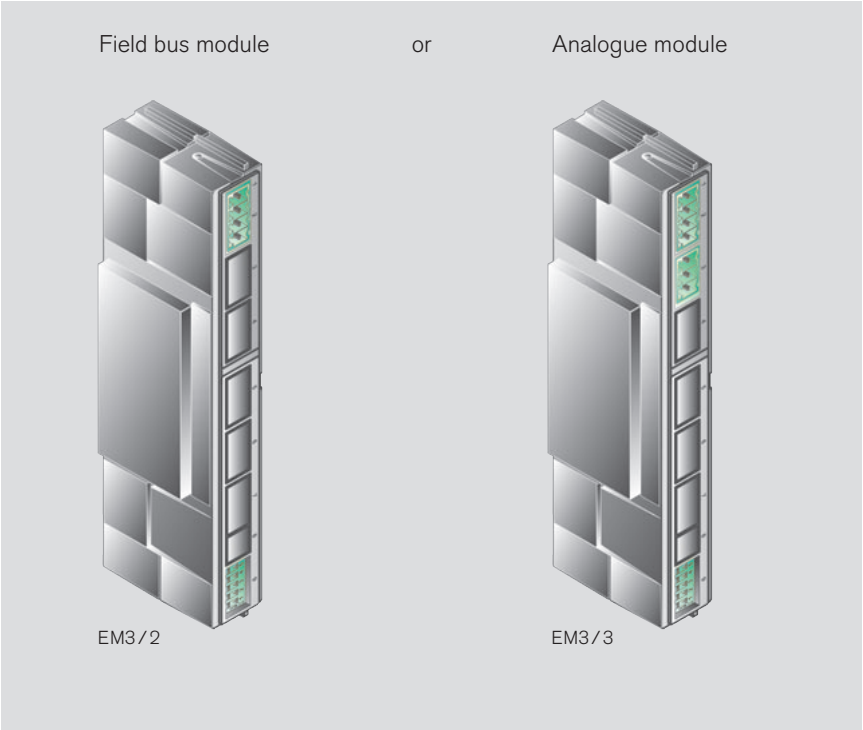

Field bus module – Modbus / Profibus

By way of example, the following data can be read or changed:

- Burner ON / OFF
- Fuel changeover
- Current degree of modulation
- Required degree of modulation
- Heat demand present
- Flame signal
- Hardware inputs and outputs
- Operating phase
- Hours run
- Fan speed with VSD
- Actuator positions
- Fuel throughputs
- Etc.

Analogue module – input / output

Input: Required burner load
0–20 mA / 4–20 mA
0–10 V / 2–10 V

Output: Current burner load
0–20 mA / 4–20 mA
0–10 V / 2–10 V

Overview of burner control
Model designation

Gas-fired operation

Single-stage control

- A temperature or pressure stat contact switches the burner on and off. The adjustable ignition load position allows a low-impact start to be effected.

Two-stage control (Z)

- Two-term switching (e.g. temperature or pressure stat) causes actuators to drive the burner to partial load or full load in response to heat demand. The combustion values between load points are CO free. The adjustable ignition load position provides for a soft start.

Sliding-two-stage / modulating control (ZM)

- An electronic load controller causes actuators to make infinitely variable load adjustments in response to heat demand.
- Available modulation control options for the W-FM 25 combustion manager:
  - Three-term switching for an optional external load controller
  - Optional EM3 / 3 expansion module for an external load controller with an analogue output signal
  - Optional EM3 / 2 expansion module for a Modbus connection

Load control

Single-stage

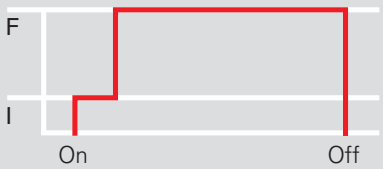

Two-stage

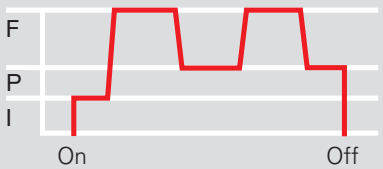

Modulating

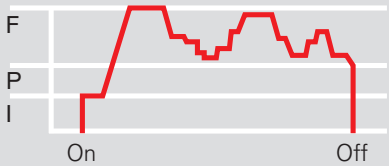

F = Full load (nominal load)
P = Partial load (minimum load)
I = Ignition load

Switching [1)]

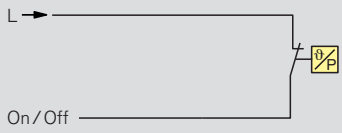

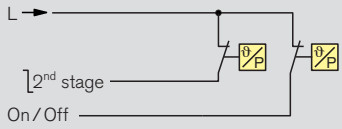

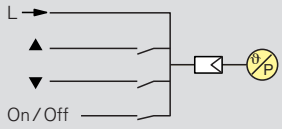

[1)] Alternatively, staged control can also be effected by an electronic PID controller. In this case, appropriate temperature sensors or pressure transducers will be required.

Model designation

Model — Version

WG10N/1-D ZM-LN

- Mixing assembly
- Load control
- Mark
- Capacity
- Gas type
- Size
- Fuel, gas
- Burner series

Details	Code	Meaning
Series	W	Compact burner
Fuel	G	Gas
Gas type	N F	Natural gas LPG
Load control	– Z ZM	Single-stage Two-stage Sliding-two-stage / modulating
Mixing assembly	– LN	Standard Low-NO_x

Use

Fuels
Natural gas
LPG

The suitability of fuels of differing quality must be confirmed in advance with Weishaupt.

Applications

W-FM 05 combustion manager for single-stage control
Suitable for intermittent firing on:
- EN 303-compliant heat generators
- LTHW boilers
- Air heaters

W-FM 10 combustion manager for two-stage control
Suitable for intermittent firing on:
- EN 303-compliant heat generators
- LTHW boilers
- Air heaters
- Group II and III steam boilers

W-FM 25 combustion manager for modulating control
Suitable for intermittent firing on:
- EN 303-compliant heat generators
- LTHW boilers
- Air heaters
- Group II and III steam boilers

W-FM 25 PO combustion manager for modulating control
Suitable for intermittent firing on:
- EN 303-compliant heat generators
- LTHW boilers
- Air heaters
- HTHW boilers
- Group II, III, and IV steam boilers
- Certain process applications

Permissible ambient conditions
- Ambient temperature
  -15 to + 40 °C for gas firing
- Maximum 80 % relative humidity, no condensation
- The combustion air must be free of aggressive substances (halogens, chlorides, fluorides etc.) and impurities (dust, debris, vapours, etc.)
- Adequate ventilation is required for operation in enclosed spaces
- For plant in unheated areas, certain further measures may be required

Use of the burner for other applications or in ambient conditions not detailed above is not permitted without the prior written agreement of Max Weishaupt GmbH. Burner service intervals will be reduced to accord with the more extreme operational conditions.

Protection Class
IP 40

Gas supply
EN 88-compliant regulators with safety diaphragms are used for low-pressure supplies.

For high-pressure supplies, an EN 334-compliant high-pressure regulator should be selected from the following technical booklets:
- Regulators up to 4 bar, Print No. 83001202
- Regulators with safety devices, Print No. 83197902

Maximum Operating Pressure (MOP)
The supplier must safeguard the gas flow pressure such that it cannot exceed the MOP of the burner's gas valve train.

Gas valve train design
Low-pressure valve trains are normally used for gas flow pressures up to a maximum of 300 mbar and a maximum operating pressure (MOP) of 500 mbar. This allows for pressure losses between the transfer station and the valve train. Furthermore, it is assumed that the transfer station utilises components (SSV, regulator) that are not of the highest class of accuracy. In individual cases, following consideration and approval by Weishaupt's headquarters, a gas flow pressure of up to 360 mbar can be approved if the appropriate conditions exist.

An additional FRS regulator must be fitted upstream of the gas multi-function assembly in the event the connection pressure will exceed 50 mbar when a W-MF 055 is used, or 150 mbar when a W-MF 507 is used.

High-pressure valve trains are normally used for gas flow pressures greater than 300 mbar.

Standards compliance
The burners are tested by an independent body and fulfil the applicable requirements of the following European Union directives and applied standards:

EMC EMC Directive 2014/30/EU
Applied standards
- EN 61000-6-1 : 2007
- EN 61000-6-3 : 2007

LVD Low-Voltage Directive 2014/35/EU
Applied standards
- EN 60335-1 : 2010
- EN 60335-2-102 : 2010

MD Machinery Directive 2006/42/EC
Applied standards
- EN 676 Annex J

GAR Gas Appliances Regulation 2016/426/EU
Applied standards
- EN 676 : 2008

PED[1] Pressure Equipment Directive 2014/68/EU
Applied standards
- EN 676 Annex K
- Conformity assessment procedure: Module B

[1] With the selection of appropriate equipment.

The burners are labelled with
- CE Mark
- CE-PIN per 2009/142/EC
- Identification No. of the notified body

Burner selection / gas valve train sizing WG5

WG5 capacity graph

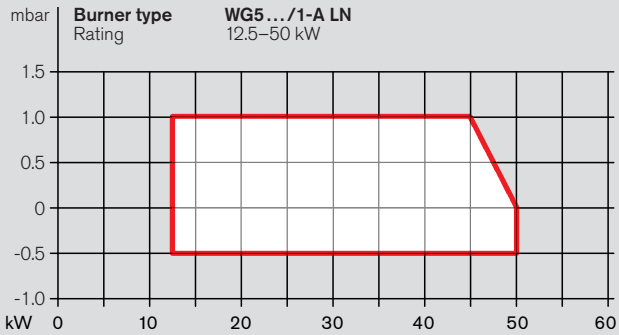

WG5		
Burner rating kW	Low-pressure supply (flow pressure in mbar into shutoff valve)	
	WG5.../1-A	**WG5.../1-A**
	W-MF 055	**W-MF 055**
	p_i max. 50 mbar	p_i max. 300 mbar
	Nom. diameter of gas ball valve	
	½"	**½"**
Nat. gas E, LHV = 10.35 kWh/m³ (37.26 MJ/m³), d = 0.606, W_i = 13.295 kWh/m³		
12.5	7	11
15	8	12
20	9	12
25	12	14
30	11	14
35	11	13
40	12	15
45	14	17
50	16	19
Nat. gas LL, LHV = 8.83 kWh/m³ (31.79 MJ/m³), d = 0.641, W_i = 11.029 kWh/m³		
12.5	14	15
15	14	16
20	13	16
25	15	18
30	15	18
35	13	16
40	15	18
45	18	21
50	20	23
LPG*, LHV = 25.89 kWh/m³ (93.20 MJ/m³), d = 1.555, W_i = 20.762 kWh/m³		
12.5	7	9
15	7	10
20	9	12
25	11	14
30	9	12
35	10	12
40	10	13
45	12	14
50	13	15

The LHV is referenced to 0 °C and 1013 mbar atmospheric.
All pressures are in mbar.
* The LPG charts are based on propane, but may also be used for butane.

The capacities as a function of combustion chamber pressure are maximum values measured in accordance with EN 676 on idealised flame tubes.

The burner capacity graphs are certified in accordance with EN 676. The stated ratings are based on an air temperature of 20 °C and an installation at sea level. For installations at higher altitudes, a reduction in capacity of 1 % per 100 m above sea level should be taken into account.

The combustion chamber pressure of the heat generator must be added to the flow pressure determined from the chart when sizing the gas valve train. Minimum flow pressure 15 mbar.

Please note that an FRS regulator is required at additional cost for gas connection pressures > 50 mbar.

Burner type	Version	Operation	Valve train R / W-MF	Rating kW	Turndown	CE-PIN	Order No.
WG5							
Natural gas							
WG5N/1-A	LN	Single-stage	½" DLE 055	12.5–50	1	CE-0085 AU 0353	232 050 11
WG5N/1-A	LN	Single-stage + actuator	½" DLE 055	12.5–50	1	CE-0085 AU 0353	232 050 10
LPG							
WG5F/1-A	LN	Single-stage + actuator	½" DLE 055	12.5–50	1	CE-0085 AU 0353	233 050 11

Extra equipment		WG5N/1-A vers. LN Order No.	WG5F/1-A vers. LN Order No.
Combustion head extension	by 100 mm by 200 mm	240 003 59 240 003 77	240 003 62 –
Integral hours-run counter		240 003 61	240 003 61
Solenoid valve for air pressure switch test for continuous-run fan or post-purge		240 003 63	240 003 63
Air inlet flange for duct connection, **without** air pressure switch		240 004 19	240 004 19
Air inlet flange for duct connection, **with** air pressure switch		240 004 11	240 004 11
Remote reset		240 003 55	240 003 55
Plugged cable for connection of an external solenoid valve		240 003 49	240 003 49
30 mm spacer flange with gasket and screws		240 003 22	240 003 22
ST 18/7 multi-pole plug for boiler-side connection		240 003 24	240 003 24
W-St 02/1 actuator for fully automatic air damper control		–	240 003 21
ÜB50 high gas pressure switch with connection cable and plug, supplied loose		230 009 88	230 009 88
Motor contactor for boiler controls with fusing < 10 A (without tank connection)		230 010 22	230 010 22
Additional FRS governor for gas supply pressures 50–300 mbar, **with** TAE supplied loose		240 003 56	240 003 56
Additional FRS governor for gas supply pressures 50–300 mbar, **without** TAE		240 003 57	240 003 57
110 V control voltage (60 Hz)		240 003 60	240 003 60

Burner selection / gas valve train sizing WG10

WG10 capacity graph

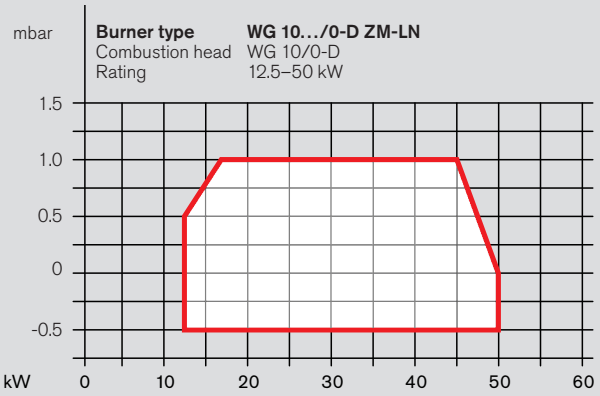

WG10 capacity graph

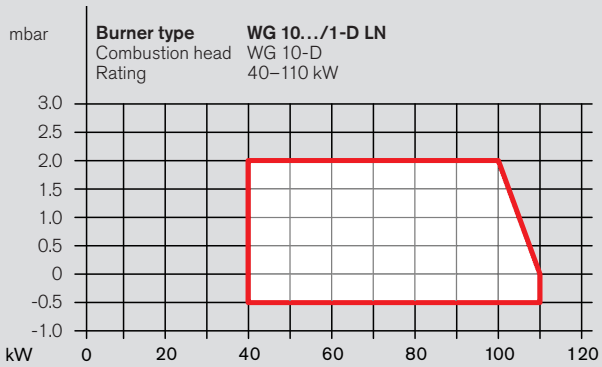

WG10 capacity graph

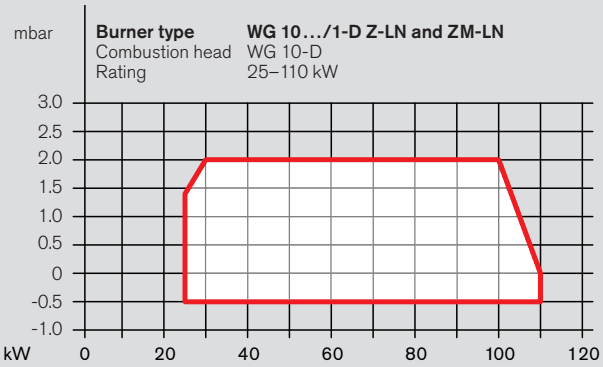

WG10

Burner rating kW	Low-pressure supply (flow pressure in mbar into shutoff valve)			
	WG10/0-D W-MF 055	**WG10/0-D W-MF 055**	**WG10/1-D W-MF 507**	**WG10/1-D W-MF 507**
	p_i max 50 mbar	p_i max 300 mbar	p_i max 300 mbar	p_i max 300 mbar
	Nom. diameter of gas ball valve			
	½"	**½"**	**¾"**	**1"**
Nat. gas E, LHV = 10.35 kWh/m³ (37.26 MJ/m³), d = 0.606, W_i = 13.295 kWh/m³				
25	12	14	–	–
40	12	15	10	10
50	16	19	10	10
60	–	–	10	10
70	–	–	10	10
80	–	–	10	10
90	–	–	11	11
100	–	–	12	11
110	–	–	13	12
Nat. gas LL, LHV = 8.83 kWh/m³ (31.79 MJ/m³), d = 0.641, W_i = 11.029 kWh/m³				
25	15	18	–	–
40	15	18	12	12
50	20	23	12	12
60	–	–	12	12
70	–	–	12	12
80	–	–	13	13
90	–	–	14	14
100	–	–	15	14
110	–	–	16	15
LPG*, LHV = 25.89 kWh/m³ (93.20 MJ/m³), d = 1.555, W_i = 20.762 kWh/m³				
25	11	14	–	–
40	10	13	8	–
50	13	15	8	–
60	–	–	9	–
70	–	–	9	–
80	–	–	10	–
90	–	–	11	–
100	–	–	12	–
110	–	–	12	–

The LHV is referenced to 0 °C and 1013 mbar atmospheric.
All pressures are in mbar.
* The LPG charts are based on propane, but may also be used for butane.

The capacities as a function of combustion chamber pressure are maximum values measured in accordance with EN 676 on idealised flame tubes.

The burner capacity graphs are certified in accordance with EN 676. The stated ratings are based on an air temperature of 20 °C and an installation at sea level. For installations at higher altitudes, a reduction in capacity of 1 % per 100 m above sea level should be taken into account.

The combustion chamber pressure of the heat generator must be added to the flow pressure determined from the chart when sizing the gas valve train. Minimum flow pressure 15 mbar.

Please note that an FRS regulator is required at additional cost for gas connection pressures > 50 mbar (W-MF055) / > 150 mbar (W-MF507).

Note:
Shaded areas of the valve train table do not meet TRGI ball valve sizing requirements. For TRGI compliance use the non-shaded area and note additional price of larger ball valve.

Burner type	Version	Operation	Valve train R / W-MF	Rating kW	Turndown	CE-PIN	Order No.
WG10							
Natural gas							
WG10N/0-D	ZM-LN	Sliding-two-stage or modulating	½" DLE 055	12.5–50	4.4:1	CE-0085 AU 353	232 136 14
WG10N/0-D	LN	Single-stage with manual air damper	¾" 507 SLE	40–110	1	CE-0085 BM 0481	232 110 24
WG10N/1-D	Z-LN	Single or two-stage	¾" 507 SE	25–110	2:1	CE-0085 BM 0481	232 123 24
WG10N/1-D	ZM-LN	Sliding-two-stage or modulating	¾" 507 SE	25–110	4.4:1	CE-0085 BM 0481	232 126 24
LPG							
WG10F/0-D	ZM-LN	Sliding-two-stage or modulating	½" DLE 055	12.5–50	4.4:1	CE-0085 AU 353	233 136 14
WG10F/1-D	LN	Single-stage with manual air damper	¾" 507 SLE	40–110	1	CE-0085 BM 0481	233 110 24
WG10F/1-D	Z-LN	Single or two-stage	¾" 507 SE	25–110	2:1	CE-0085 BM 0481	233 113 24
WG10F/1-D	ZM-LN	Sliding-two-stage or modulating	¾" 507 SE	25–110	4.4:1	CE-0085 BM 0481	233 126 24

Extra equipment			**WG10/0-D vers. ZM-LN** Order No.	**WG10/1-D vers. LN** Order No..	**WG10/1-D vers. Z-LN** Order No..	**WG10/1-D vers. ZM-LN** Order No..
Additional ¾" FRS governor for gas pressures > 150 mbar			–	230 011 02	230 011 02	230 011 02
Additional ½" FRS governor for gas pressures > 50 mbar			230 009 11	–	–	–
W-MF 507 with 1" ball valve & TAE for TRGI			230 010 92	230 010 92	230 010 92	230 010 92
Combustion head extension	Natural gas	by 100 mm	230 009 31	230 008 49	230 008 49	230 008 49
		by 200 mm	230 009 32	230 008 50	230 008 50	230 008 50
		by 300 mm	230 009 33	230 008 51	230 008 51	230 008 51
	LPG	by 100 mm	230 009 34	230 008 52	230 008 52	230 008 52
		by 200 mm	230 009 35	230 008 53	230 008 53	230 008 53
		by 300 mm	230 009 36	230 008 54	230 008 54	230 008 54
Integral hours-run counter (at initial build only, not available for retrofit)			–	230 008 01	230 008 01	–
Solenoid valve for air pressure switch test for continuous-run fan or post-purge			230 007 98	230 003 29	230 003 29	230 007 98
Air inlet flange for duct connection, with air pressure switch			230 011 44	230 009 02	230 009 02	230 011 44
Remote reset			230 011 48	230 007 97	230 007 97	230 011 48
Plugged cable for connection of an external solenoid valve			Please enquire	230 007 96	230 007 96	Please enquire
30 mm spacer flange			230 008 02	–	230 008 02	230 008 02
W-FM 25 PO combustion manager, 230–240 V (for continuous burner firing > 24 h)			230 013 34	–	–	230 011 34
ÜB50 high gas pressure switch with connection cable and plug, supplied loose			–	230 010 40	230 010 40	–
GW50 high gas pressure switch with connection cable and plug, supplied loose			230 011 42	–	–	230 011 42
EM 3/3 analogue expansion module			230 011 51	–	–	230 011 51
EM 3/2 field bus expansion module (Profibus / Modbus-RTU)			230 011 52	–	–	230 011 52
Motor contactor for boiler controls with fusing < 10 A (without tank connection)			230 011 39	230 010 22	230 010 22	230 011 39

Burner selection / gas valve train sizing WG20

WG20 capacity graph

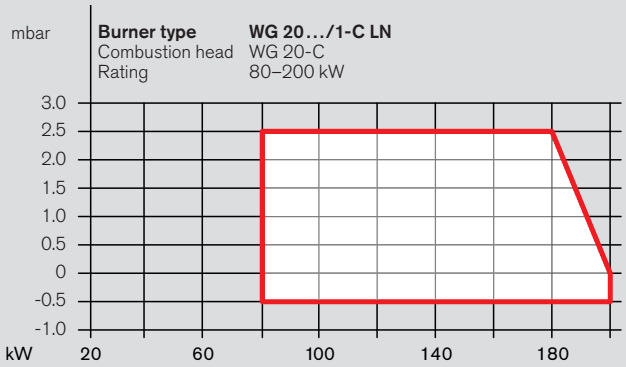

WG20 capacity graph

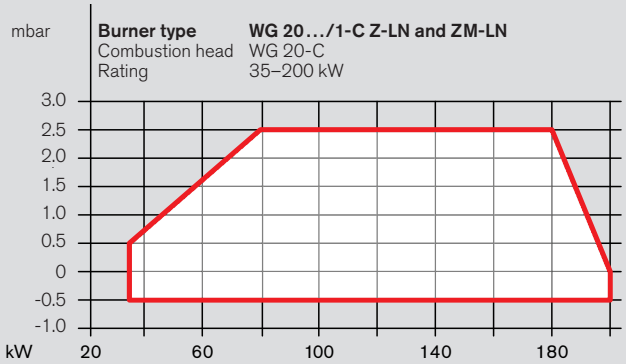

WG20

Burner rating kW	Low-pressure supply (flow pressure in mbar into shutoff valve, p_i max = 300 mbar) W-MF 507 Nominal diameter of gas ball valve ¾"	W-MF 507 1"	W-MF 512 1"
Nat. gas E, LHV = 10.35 kWh/m³ (37.26 MJ/m³), d = 0.606, W_i = 13.295 kWh/m³			
80	–	13	11
90	–	13	11
100	–	13	11
110	–	14	12
120	–	14	13
130	–	15	13
140	–	15	13
150	–	16	14
160	–	16	15
170	–	16	15
180	–	16	15
190	–	17	16
200	–	18	16
Nat. gas LL, LHV = 8.83 kWh/m³ (31.79 MJ/m³), d = 0.641, W_i = 11.029 kWh/m³			
80	–	15	13
90	–	15	13
100	–	15	14
110	–	16	14
120	–	16	15
130	–	17	16
140	–	18	16
150	–	18	17
160	–	19	17
170	–	20	18
180	–	21	18
190	–	22	19
200	–	23	20
LPG*, LHV = 25.89 kWh/m³ (93.20 MJ/m³), d = 1.555, W_i = 20.762 kWh/m³			
80	13	–	–
90	13	–	–
100	13	–	–
110	14	–	–
120	14	–	–
130	14	–	–
140	14	–	–
150	15	–	–
160	15	–	–
170	16	–	–
180	17	–	–
190	18	–	–
200	19	–	–

The LHV is referenced to 0 °C and 1013 mbar atmospheric.
All pressures are in mbar.
* The LPG charts are based on propane, but may also be used for butane.

The capacities as a function of combustion chamber pressure are maximum values measured in accordance with EN 676 on idealised flame tubes.

The burner capacity graphs are certified in accordance with EN 676. The stated ratings are based on an air temperature of 20 °C and an installation at sea level. For installations at higher altitudes, a reduction in capacity of 1 % per 100 m above sea level should be taken into account.

The combustion chamber pressure of the heat generator must be added to the flow pressure determined from the chart when sizing the gas valve train. Minimum flow pressure 15 mbar.

Please note that an FRS regulator is required at additional cost for gas connection pressures > 150 mbar.

Burner type	Version	Operation	Valve train R / W-MF	Rating kW	Turndown	CE-PIN	Order No.
WG20							
Natural gas							
WG20N/1-C	LN	Single-stage with manual air damper	1" 507 SLE	80–200	1	CE-0085 BM 0216	232 210 34
WG20N/1-C	Z-LN	Single or two-stage	1" 507 SE	35–200	2:1	CE-0085 BM 0216	232 213 34
WG20N/1-C	ZM-LN	Sliding-two-stage or modulating	1" 507 SE	35–200	5.7:1	CE-0085 BM 0216	232 216 34
WG20N/1-C	LN	Single-stage with manual air damper	1" 512 SE	80–200	1	CE-0085 BM 0216	232 210 44
WG20N/1-C	Z-LN	Single or two-stage	1" 512 SE	35–200	2:1	CE-0085 BM 0216	232 213 44
WG20N/1-C	ZM-LN	Sliding-two-stage or modulating	1" 512 SE	35–200	5.7:1	CE-0085 BM 0216	232 216 44
LPG							
WG20F/1-C	LN	Single-stage with manual air damper	¾" 507 SLE	80–200	1	CE-0085 BM 0216	233 210 24
WG20F/1-C	Z-LN	Single or two-stage	¾" 507 SE	35–200	2:1	CE-0085 BM 0216	233 213 24
WG20F/1-C	ZM-LN	Sliding-two-stage or modulating	¾" 507 SE	35–200	5.7:1	CE-0085 BM 0216	233 216 24

Extra equipment	**WG20/1-C vers. LN** Order No.	**WG20/1-C vers. Z-LN** Order No.	**WG20/1-C vers. ZM-LN** Order No.
Additional ¾" FRS governor for gas pressures > 150 mbar (LPG) Additional 1" FRS governor for gas pressures > 150 mbar (natural gas)	230 011 03 230 011 62	230 011 03 230 011 62	230 011 03 230 011 62
Combustion head extension Natural gas by 100 mm by 200 mm by 300 mm	230 007 80 230 007 81 230 007 82	230 007 80 230 007 81 230 007 82	230 007 80 230 007 81 230 007 82
LPG by 100 mm by 200 mm by 300 mm	230 007 83 230 007 84 230 007 85	230 007 83 230 007 84 230 007 85	230 007 83 230 007 84 230 007 85
Integral hours-run counter (at initial build only, not available for retrofit)	230 008 01	230 008 01	–
Solenoid valve for air pressure switch test for continuous-run fan or post-purge	230 003 29	230 003 29	230 007 98
Air inlet flange for duct connection, with air pressure switch	230 008 34	230 008 34	230 011 45
Remote reset	230 007 97	230 007 97	230 011 48
Plugged cable for connection of an external solenoid valve	230 007 96	230 007 96	Please enquire
30 mm spacer flange	230 008 02	230 008 02	230 008 02
W-FM 25 PO combustion manager for continuous burner firing > 24 h and/or O_2 trim	–	–	230 012 33
ÜB50 high gas pressure switch with connection cable and plug, supplied loose	230 010 40	230 010 40	–
GW50 high gas pressure switch with connection cable and plug, supplied loose	–	–	230 011 42
O_2 trim set, comprising O_2 module, O_2 probe, probe flange, and connection cables with plugs	–	–	230 012 34
EM 3/3 analogue expansion module	–	–	230 011 51
EM 3/2 field bus expansion module (Profibus / Modbus-RTU)	–	–	230 011 52
Motor contactor for boiler controls with fusing < 10 A (without tank connection)	230 010 22	230 010 22	230 011 39

Burner selection / gas valve train sizing WG30

WG30 capacity graph

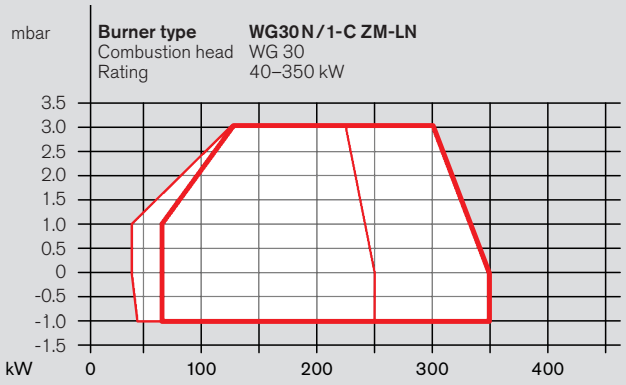

WG30 capacity graph

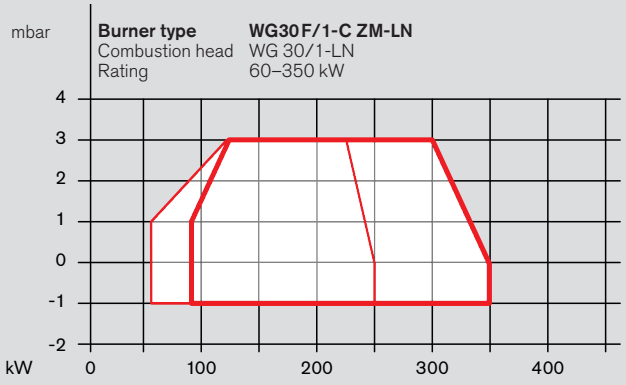

Combustion head open — Combustion head closed —

WG30

Burner rating kW	Low-pressure supply (flow pressure in mbar into shutoff valve, p_i max = 300 mbar)			
	W-MF 507		**W-MF 512**	
	Nom. diameter of gas ball valve			
	¾"	**1"**	**1"**	**1½"**
Nat. gas E, LHV = 10.35 kWh/m³ (37.26 MJ/m³), d = 0.606, W_i = 13.295 kWh/m³				
130	15	15	14	13
160	17	16	15	14
190	18	17	15	13
210	19	17	15	13
240	21	18	15	13
270	23	20	16	13
300	26	22	17	14
350	33	28	20	16
Nat. gas LL, LHV = 8.83 kWh/m³ (31.79 MJ/m³), d = 0.641, W_i = 11.029 kWh/m³				
130	18	17	15	14
160	20	19	16	15
190	22	20	17	15
210	23	21	17	15
240	26	23	18	15
270	30	25	19	15
300	34	29	21	17
350	44	37	26	21
LPG*, LHV = 25.89 kWh/m³ (93.20 MJ/m³), d = 1.555, W_i = 20.762 kWh/m³				
130	13	13	–	–
160	14	13	–	–
190	14	14	–	–
210	15	14	–	–
240	15	14	–	–
270	17	16	–	–
300	18	17	–	–
350	21	19	–	–

The LHV is referenced to 0 °C and 1013 mbar atmospheric.
All pressures are in mbar.
* The LPG charts are based on propane, but may also be used for butane.

The capacities as a function of combustion chamber pressure are maximum values measured in accordance with EN 676 on idealised flame tubes.

The burner capacity graphs are certified in accordance with EN 676. The stated ratings are based on an air temperature of 20 °C and an installation at sea level. For installations at higher altitudes, a reduction in capacity of 1 % per 100 m above sea level should be taken into account.

The combustion chamber pressure of the heat generator must be added to the flow pressure determined from the chart when sizing the gas valve train. Minimum flow pressure 15 mbar.

Please note that an FRS regulator is required at additional cost for gas connection pressures > 150 mbar.

Note:
Shaded areas of the valve train table do not meet TRGI ball valve sizing requirements. For TRGI compliance use the non-shaded area and note additional price of larger ball valve.

Burner type	Version	Operation	Valve train R / W-MF	Rating kW	Turndown	CE-PIN	Order No.
WG30							
Natural gas							
WG30N/1-C	ZM-LN	Sliding-two-stage or modulating	¾" 507 SE 1" 512 SE 1½" 512 SE	40–350	5:1	CE-0085-AU 0064	232 326 21 232 326 31 232 326 51
LPG							
WG30F/1-C	ZM-LN	Sliding-two-stage or modulating	¾" 507 SE	60–350	4:1	CE-0085-AU 0064	233 326 21

Extra equipment			Order No.
Additional ¾" FRS governor for gas pressures > 150 mbar Additional 1" FRS governor for gas pressures > 150 mbar Additional 1½" FRS governor for gas pressures > 150 mbar			230 011 04 230 011 63 230 011 64
W-MF 507 with 1" ball valve & TAE for TRGI W-MF 507 with 1½" ball valve & TAE for TRGI			230 010 92 230 010 93
Combustion head extension	Natural gas	by 100 mm by 200 mm by 300 mm	230 005 89 230 005 95 230 006 04
	LPG	by 100 mm by 200 mm by 300 mm	230 009 52 230 009 53 230 009 54
Solenoid valve for air pressure switch test for continuous-run fan or post-purge			230 005 43
Air inlet flange for duct connection, with air pressure switch			230 011 46
Remote reset			230 011 48
Plugged cable for connection of an external solenoid valve			230 005 45
W-FM 25 PO combustion manager for continuous burner firing > 24 h and / or O_2 trim			230 012 33
Motor contactor for boiler controls with fusing < 10 A (without tank connection)			230 011 40
GW50 high gas pressure switch with connection cable and plug, supplied loose			230 011 42
VSD with integral frequency convertor			230 011 49
O_2 trim set, comprising O_2 module, O_2 probe, probe flange, and connection cables with plugs			230 012 34
EM 3/3 analogue expansion module			230 011 51
EM 3/2 field bus expansion module (Profibus / Modbus-RTU)			230 011 52

Burner selection / gas valve train sizing WG40

WG40 capacity graph

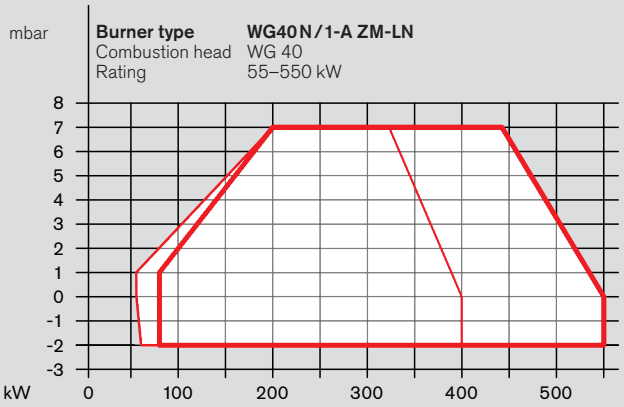

WG40 capacity graph

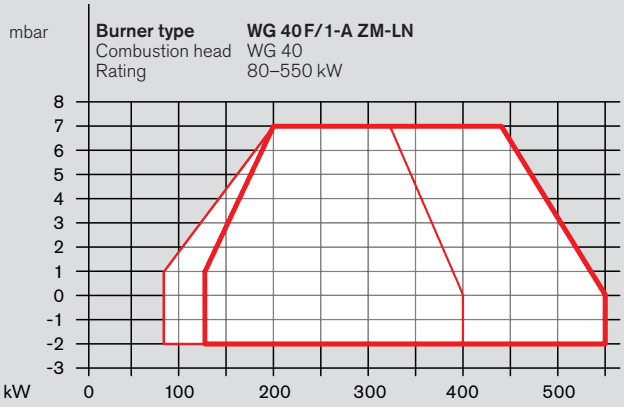

Combustion head open — Combustion head closed —

Do not select a firing rate below 80 kW.

WG40

Burner rating kW	Low-pressure supply (flow pressure in mbar into shutoff valve, p_i max = 300 mbar)					
	W-MF 507	**W-MF 512**	**512**	**DMV 525/12**	**DMV 5065/12**	**DMV 5080/12**
	Nominal diameter of gas ball valve					
	¾"	**1"**	**1½"**	**2"**	**DN65**	**DN80**
Nat. gas E, LHV = 10.35 kWh/m³ (37.26 MJ/m³), d = 0.606, W_i = 13.295 kWh/m³						
240	19	14	12	11	11	11
270	22	14	12	11	11	11
300	25	15	13	12	11	11
350	30	17	13	12	11	11
400	36	19	14	13	12	11
450	42	22	15	13	12	11
500	52	27	18	16	14	14
550	61	31	21	18	16	15
Nat. gas LL, LHV = 8.83 kWh/m³ (31.79 MJ/m³), d = 0.641, W_i = 11.029 kWh/m³						
240	26	17	15	14	13	13
270	29	18	15	14	13	13
300	33	19	15	14	13	13
350	40	22	16	14	13	13
400	49	26	18	16	14	14
450	60	30	21	18	16	15
500	72	35	23	20	17	17
550	86	42	27	23	20	19
LPG*, LHV = 25.89 kWh/m³ (93.20 MJ/m³), d = 1.555, W_i = 20.762 kWh/m³						
240	13	11	–	–	–	–
270	14	11	–	–	–	–
300	16	12	–	–	–	–
350	19	14	–	–	–	–
400	22	15	–	–	–	–
450	26	17	–	–	–	–
500	29	19	–	–	–	–
550	33	21	–	–	–	–

The LHV is referenced to 0 °C and 1013 mbar atmospheric.
All pressures are in mbar.
* The LPG charts are based on propane, but may also be used for butane.

The capacities as a function of combustion chamber pressure are maximum values measured in accordance with EN 676 on idealised flame tubes.

The burner capacity graphs are certified in accordance with EN 676. The stated ratings are based on an air temperature of 20 °C and an installation at sea level. For installations at higher altitudes, a reduction in capacity of 1 % per 100 m above sea level should be taken into account.

The combustion chamber pressure of the heat generator must be added to the flow pressure determined from the chart when sizing the gas valve train. Minimum flow pressure 15 mbar.

Please note that an FRS regulator is required at additional cost for gas connection pressures > 150 mbar.

Burner type	Version	Operation	Valve train R / DN	Type	Rating kW	Turndown .	CE-PIN	Order No.
WG40								
Natural gas								
WG40N/1-A	ZM-LN	Sliding-two-stage or modulating	¾"	W-MF 507 SE	55–550	7:1	CE-0085-AS 0311	232 416 21
			1"	W-MF 512 SE				232 426 31
			1½"	W-MF 512 SE				232 416 51
			2"	DMV 525/12				232 406 61
			DN65	DMV 5065/12				232 416 31
			DN80	DMV 5080/12				232 416 41
LPG								
WG40F/1-A	ZM-LN	Sliding-two-stage or modulating	¾"	W-MF 507 SE	80–550	4:1	CE-0085-AS 0311	233 416 21

Extra equipment			Order No.
Additional ¾" FRS governor for gas supply pressures > 150 mbar Additional 1"FRS governor for gas supply pressures > 150 mbar Additional 1½" FRS governor for gas supply pressures > 150 mbar			230 011 04 230 011 63 230 011 64
W-MF 507 with 1" ball valve & TAE for TRGI W-MF 507 with 1½" ball valve & TAE for TRGI			230 010 92 230 010 93
W-MF 512 with 2" ball valve & TAE for TRGI			230 010 96
Combustion head extension	Natural gas	by 100 mm by 200 mm by 300 mm	230 005 36 230 008 98 230 008 99
	LPG	by 100 mm by 200 mm by 300 mm	230 009 55 230 009 56 230 009 57
Solenoid valve for air pressure switch test for continuous-run fan or post-purge			230 005 43
Air inlet flange for duct connection, with air pressure switch			230 011 47
Remote reset			230 011 48
Plugged cable for connection of an external solenoid valve			230 005 45
W-FM 25 PO combustion manager for continuous burner firing > 24 h and / or O_2 trim			230 012 33
GW50 high gas pressure switch with connection cable and plug for valve trains ≤ 1½", supplied loose			230 011 42
GW50 high gas pressure switch with connection cable and plug for valve trains ≥ 2", supplied loose			230 011 43
VSD with integral frequency convertor			230 011 49
O_2 trim set, comprising O_2 module, O_2 probe, probe flange, and connection cables with plugs			230 012 34
EM 3/3 analogue expansion module			230 011 51
EM 3/2 field bus expansion module (Profibus / Modbus-RTU)			230 011 52

Technical data

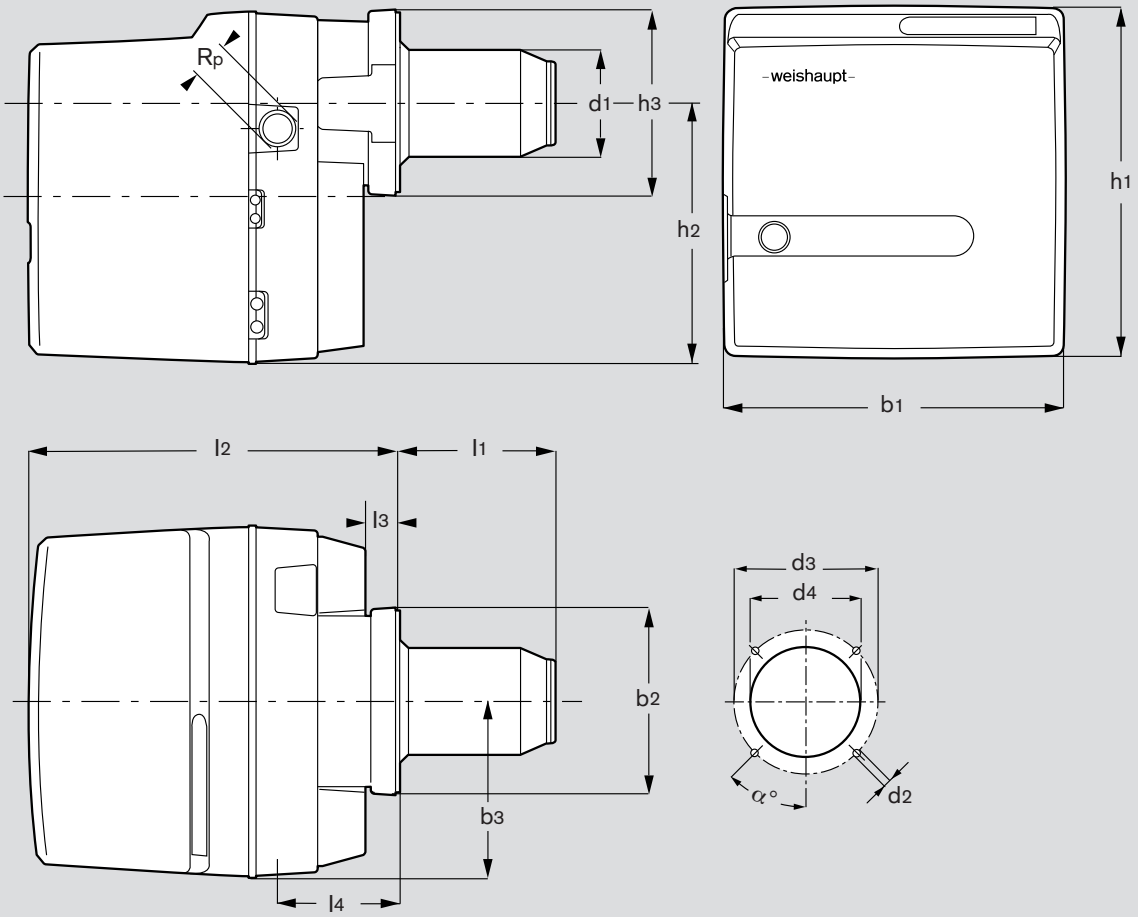

Burner dimensions

Burner type	Dimensions in mm															
	l_1	l_2	l_3	l_4	b_1	b_2	b_3	h_1	h_2	h_3	d_1	d_2	d_3	d_4	Rp	α°
WG5	135	308	30	103	286	154	143	292	216	154	90	M8	130–150	110	½"	45°
WG10	140	349	31,5	115	330	165	164	353	270	165	108	M8	150–170	110	¾"	45°
WG20	140	397	32	158	358	182	178	376	284,5	182	120	M8	170	130	1"	45°
WG30	166	480	62	197	420	226	196	460	342	226	127	M8	170–186	130	1½"	45°
WG40	235	577	72	235	450	245	207	480	360	245	154	M10	186–200	160	1½"	45°

Technical data

Burner type	Combust. manager	Motor	Actuator	Air pressure switch	Flame monitoring	Burner mass ①	Gas valve train Size	Gas valve train Type	Gas valve train Mass ①	Noise emission ②
WG5.../1-A										
Vers. LN	W-FM 05	ECK 02/H-2/1 230 V, 50 Hz 0.04 kW Cap. 3 µF	W-St 02/1	LGW 3/A1	Ionisation	12.8 kg	½"	W-MF DLE 055	2.22 kg	58 dB(A)
WG10.../0-D										
Vers . ZM-LN	W-FM 25	ECK 02/H-2/1 230 V, 50 Hz 0.04 kW Cap. 3 µF	STE 4,5 *	LGW 3/A1	Ionisation	13.5 kg	½"	W-MF DLE 055	2.6 kg	61 dB(A)
WG10.../1-D										
Vers . LN **Vers . Z-LN** **Vers . ZM-LN**	W-FM 05 W-FM 10 W-FM 25	ECK 03/H-2/1 230 V, 50 Hz 0.095 kW Cap. 4 µF	None STD 4,5 ** STE 4,5 *	LGW 10/A2	Ionisation	13.5 kg	¾" ¾" ¾"	W-MF 507 SLE W-MF 507 SE W-MF 507 SE	6.0 kg	65 dB(A)
WG20.../1-C										
Vers . LN **Vers . Z-LN** **Vers . ZM-LN**	W-FM 05 W-FM 10 W-FM 25	ECK 04/A-2 230 V, 50 Hz 0.21 kW Cap. 8 µF	None STD 4,5 ** STE 4,5 *	LGW 10/A2	Ionisation	20.0 kg	1" 1" 1"	W-MF 507/512 SLE W-MF 507/512 SE W-MF 507/512 SE	6 kg / 7 kg	73 dB(A)
WG30.../1-C										
Vers . ZM-LN With VSD	W-FM 25 W-FM 25	ECK 05/A-2 230 V; 50 Hz 0.38 kW Cap. 12 µF DK05/A-2 3~ 230 V; 50 Hz 0.42 kW	STE 4,5 * BO.36/6-01L	LGW 10/A2	Ionisation	27.0 kg	¾" 1" 1½"	W-MF 507 SE W-MF 512 SE W-MF 512 SE	5.5 kg 9.0 kg 13.5 kg	75 dB(A)
WG40.../1-A										
Vers . ZM-LN With VSD	W-FM 25 W-FM 25	ECK 06/A-2 230 V; 50 Hz 0.53 kW Cap. 16 µF DK06/A-2 3~ 230 V; 50 Hz 0.62 kW	STE 4,5 * BO.36/6-01L	LGW 10/A2	Ionisation	35.0 kg	¾" 1" 1½" 2" DN 65 DN 80	W-MF 507 SE W-MF 512 SE W-MF 512 SE DMV 525/12+FRS DMV 5065/12+FRS DMV 5080/12+FRS	5.5 kg 9.0 kg 13.5 kg 17.5 kg 50.0 kg 67.0 kg	77 dB(A)

* **Runtime during operation:** max. 50 s with full setting movement / min. 25 s with reduced setting movement / **Runtime during pre-purge** approx. 1–2 s.
** **Runtime during operation:** approx. 3 s with full setting movement / < 3 s with reduced setting movement / **Runtime during pre-purge** approx. 3 s.

① All masses are approximate.
Add 1 kg for burners with VSD.

② Measured sound pressure level.
Values in the field are subject to variation according to the characteristics of the entire acoustic system.

–weishaupt–

Max Weishaupt GmbH
88475 Schwendi
Tel +49 7353 830
Fax +49 7353 83358
www.weishaupt.de

Print No. 83**2141**02, June 2019
Printed in Germany. All rights reserved.

Neachells Lane, Willenhall, WV13 3RG
Tel (01902) 609841

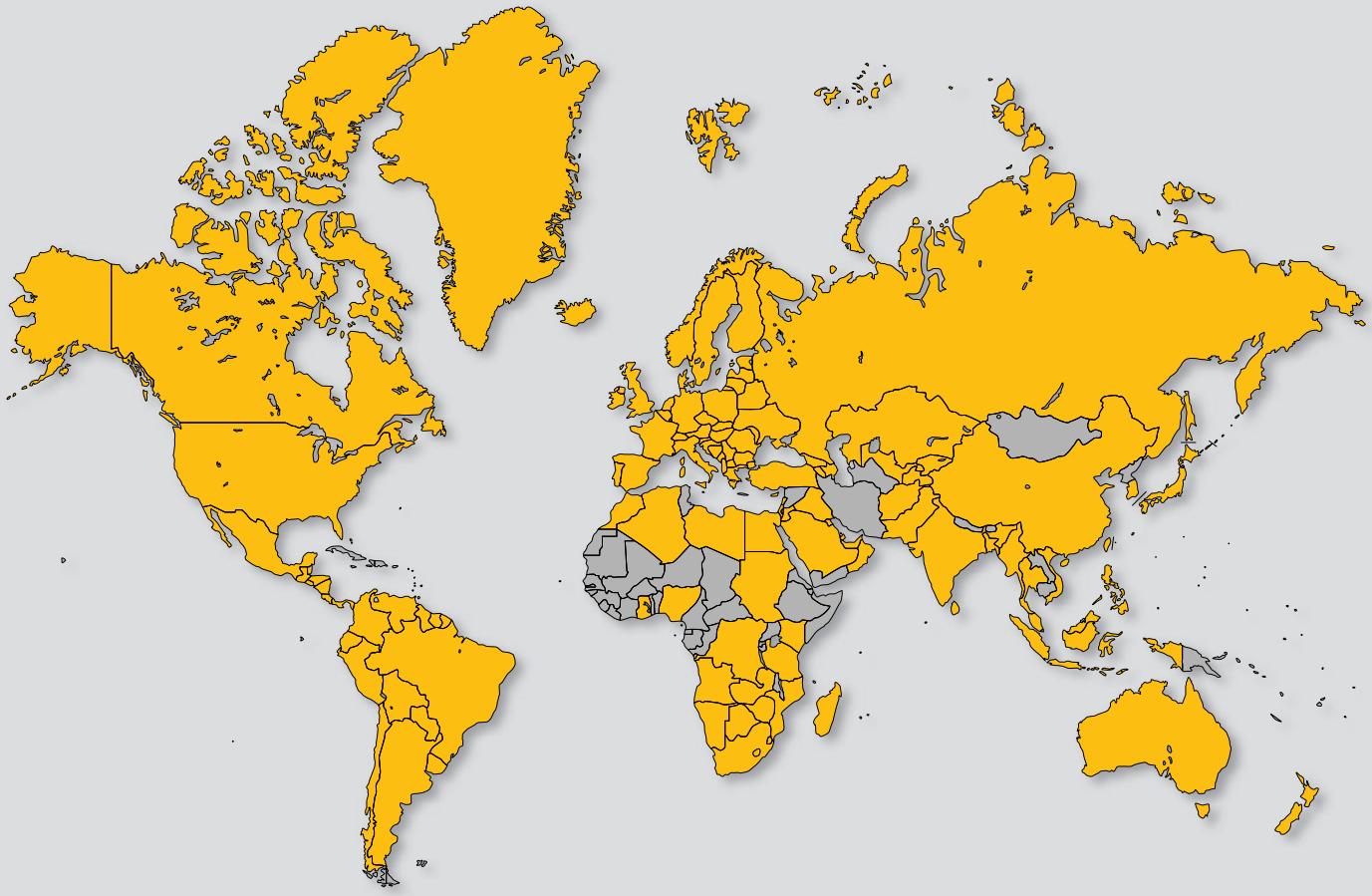

Weishaupt worldwide:

Afghanistan
Algeria
Angola
Argentina
Australia
Austria
Bahrain
Bangladesh
Belarus
Belgium
Belize
Bolivia
Bosnia-Herzegovina
Botswana
Brasil
Bulgaria
Canada
Chile
China
Colombia
Costa Rica
Croatia
Cyprus
Czechia
Denmark
Ecuador
Egypt
El Salvador
Estonia
Eswatini
Faroe Islands
Finland
France
Germany
Ghana
Greece
Greenland
Guatemala
Guyana
Honduras
Hungary
India
Indonesia
Iraq
Ireland
Israel
Italy
Japan
Jordan
Kazakhstan
Kenya
Kuwait
Kyrgyzstan
Latvia
Lebanon
Lesotho
Libya
Liechtenstein
Lithuania
Luxembourg
Madagascar
Malaysia
Malta
Mauritius
Mexico
Moldova
Monaco
Montenegro
Morocco
Mozambique
Myanmar
Namibia
Netherlands
New Zealand
Nicaragua
Nigeria
North Macedonia
Norway
Oman
Pakistan
Panama
Paraguay
Peru
Philippines
Poland
Portugal
Qatar
Rep. of Congo
Romania
Russia
San Marino
Saudi Arabia
Serbia
Singapore
Slovakia
Slovenia
South Africa
South Korea
Spain
Sri Lanka
Sudan
Suriname
Sweden
Switzerland
Taiwan
Tajikistan
Tanzania
Thailand
Turkey
UAE
Ukraine
United Kingdom
Uruguay
USA
Uzbekistan
Vatican city
Venezuela
Vietnam
Zambia
Zimbabwe