Automatic burner control unit IFD 244

Technical Information · GB
6.1.1.4 Edition 03.08

- For directly ignited burners of up to 350 kW in continuous operation pursuant to EN 746-2
- Continuous self-testing for faults
- Restart following flame failure
- Flame control with ionisation sensor
- Diverse installation possibilities via holes or snap mechanism for DIN rail
- Space-saving installation on site with IFD 244..I with integrated ignition
- Display for program status and flame signal intensity

www.kromschroeder.com

elster
Kromschröder

ПРОМЭЛЕКТРОНИКА / sales@prom-elec.com

Table of contents

Automatic burner control unit IFD 244 1
Table of contents 2
1 Application 4
1.1 Examples of application 5
1.1.1 Atmospheric burners 6
1.1.2 Forced draught burners 7
1.1.3 Two-stage-controlled burner 8
1.1.4 Modulating zone control 9
2 Certification 10
3 Function 11
3.1 Connection diagrams 11
3.2 Program sequence 12
3.3 Animation 13
3.4 Program status and fault messages 14
3.4.1 Reading off the flame signal 15
4 Parameters 16
4.1 Scanning the parameters 16
4.2 Flame control 17
4.2.1 Burner flame signal 17
4.2.2 Switch-off threshold of the flame amplifier 17
4.3 Behaviour during start-up 18
4.3.1 Normal start-up 18
4.3.2 Start-up without flame signal 18
4.3.3 Flame simulation 19
4.4 Behaviour during operation 20
4.4.1 Safety time during operation tSB for V1 and V2 20
4.4.2 Restart following flame failure 20
5 Replacement possibilities 21
6 Selection 22
6.1 Determining the safety time tSA 22
6.1.1 Calculating the safety time t_{SA} 22
6.2 Selection table 23
6.2.1 Type code 23
7 Project planning information 24
7.1 Cable selection 24
7.1.1 Ionisation cable and ignition cable 24
7.2 Star electrodes 24
7.3 Purge 24
7.4 Emergency stop in the event of fire or electric shock . 25
7.5 Emergency stop triggered by safety interlock 25
7.6 Overload protection 25
7.7 Parallel reset 25
7.8 Remote reset 25
7.9 Behaviour in the event of flame failure 25
7.10 Wiring 26
7.11 Note on EC type-examination 26
7.12 Installation of solenoid valves for gas 26
7.13 Flame control 26
7.14 Flame signal cut-off point 26
8 Accessories 27
8.1 High-voltage cable 27
8.2 Radio interference suppressed electrode adapters . . 27
9 Technical data 28
9.1 Operating controls 29
9.2 Installation 29
10 Maintenance cycles 30
11 Legende 30

▼ = To be continued

12 Glossary 31
12.1 Start-up position/standby 31
12.2 Waiting time t_W 31
12.3 Safety time on start-up t_{SA} 31
12.4 Ignition time t_Z 31
12.5 Flame simulation/Flame simulation delay time t_{LV} . . . 32
12.6 Safety time during operation t_{SB} 32
12.7 Flame signal 32
12.8 Fault lock-out 32
12.9 Safety interlocks (Limits) 32
12.10 Gas valve V1 32
12.11 Continuous operation 32
Feedback 33
Contact 33

IFD 244

1 Application

Automatic burner control unit IFD 244 ignites and monitors gas burners in continuous operation. As a result of its fully electronic design it reacts quickly to various process requirements and is therefore also suitable for frequent cycling operation.

It can be used for directly ignited industrial burners in double-electrode operation up to 350 kW.

The program status and the level of the flame signal can be read directly from the unit.

Following a flame failure during operation, a restart is conducted automatically.

1.1 Examples of application

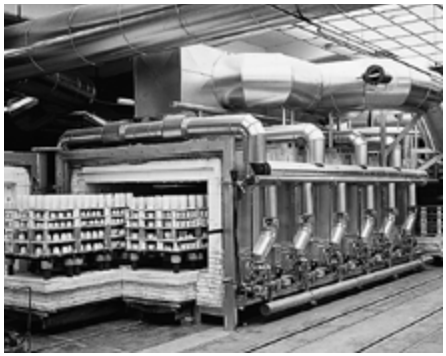

Intermittent shuttle kiln in the ceramics industry

Roller hearth kiln

Roller hearth kiln

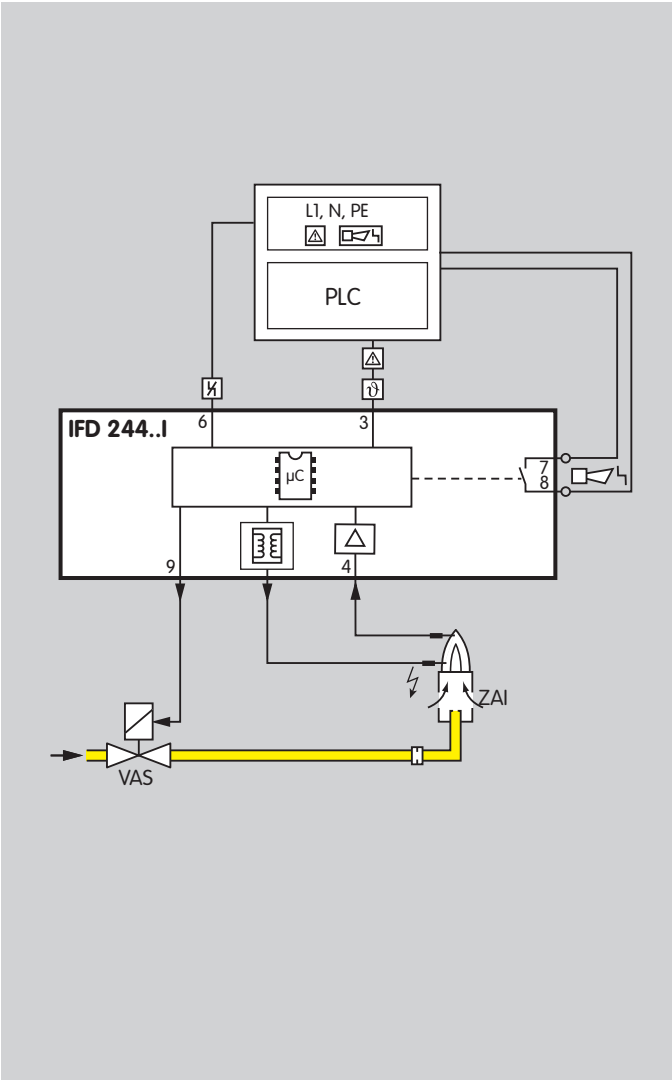

1.1.1 Atmospheric burners

Control: ON/OFF

The burner is ignited by the ignition electrode and is monitored by the ionisation electrode. In the event of a flame failure during start-up, an immediate fault lock-out occurs. Following a flame failure during operation, a restart is conducted.

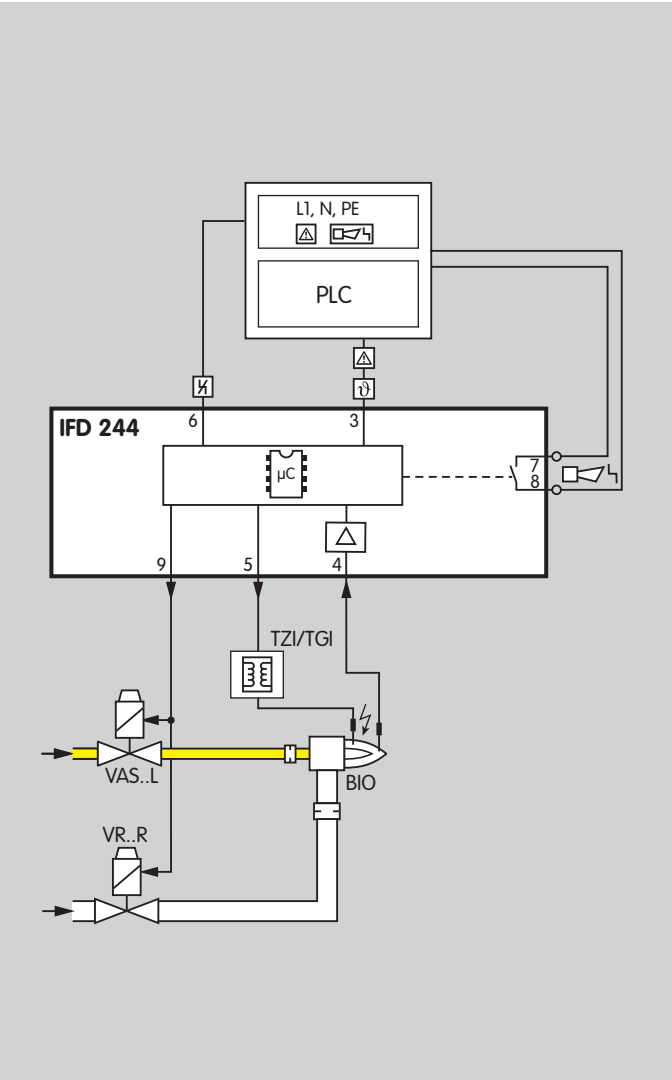

1.1.2 Forced draught burners

Control: ON/OFF

Gas valve and air valve are activated simultaneously. In the event of a flame failure during start-up, an immediate fault lock-out occurs. Following a flame failure during operation, a restart is conducted.

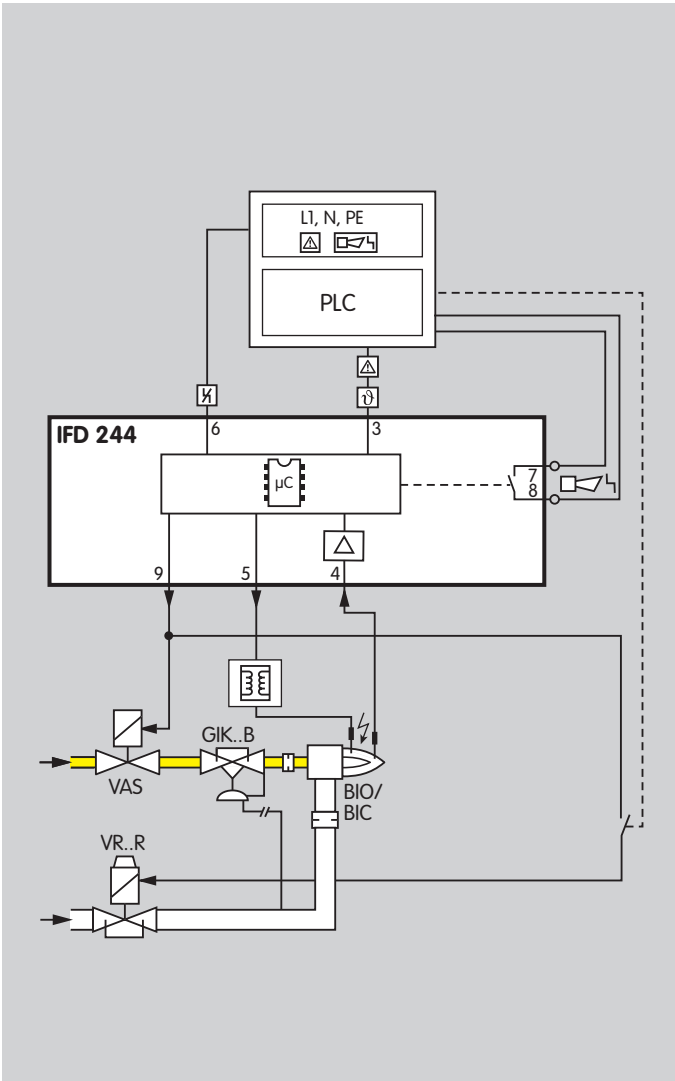

1.1.3 Two-stage-controlled burner

Control: High/Low or High/Low/OFF

The burner BIO/BIC starts at low-fire rate. By opening the air valve, the burner is switched to high fire. An external control system, e.g. a PLC, can now pulse the air solenoid valve VR..R in order to control the capacity between high and low fire. In the event of a flame failure during start-up, an immediate fault lock-out occurs. Following a flame failure during operation, a restart is conducted.

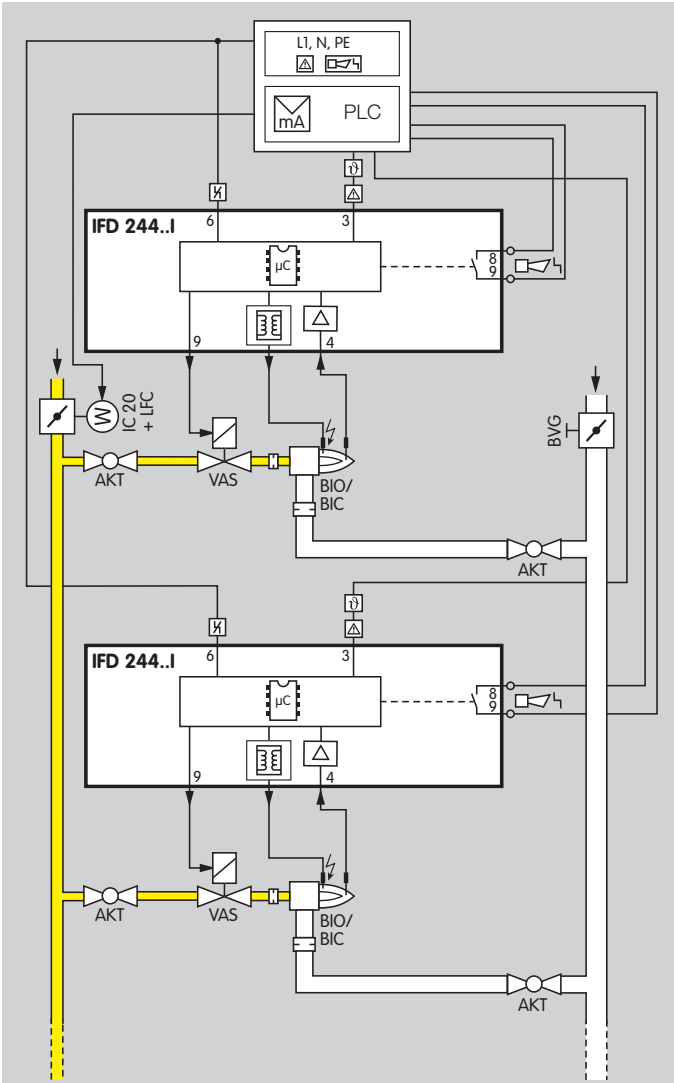

1.1.4 Modulating zone control

Control: ON/OFF/continuous

The air is set to a constant value for each zone using a manual valve. The burner capacity is controlled by the linear flow control LFC and actuator IC 20.

CE

2 Certification

The IFD 244 complies with the requirements of the following directives and standards:

- Machinery Directive (2006/42/EC)
- EN 298
- Low Voltage Directive (2006/95/EC)
- Electromagnetic Compatibility Directive (2004/108/EC)

Certification pursuant to

- Gas Appliances Directive
- FM

is currently being prepared.

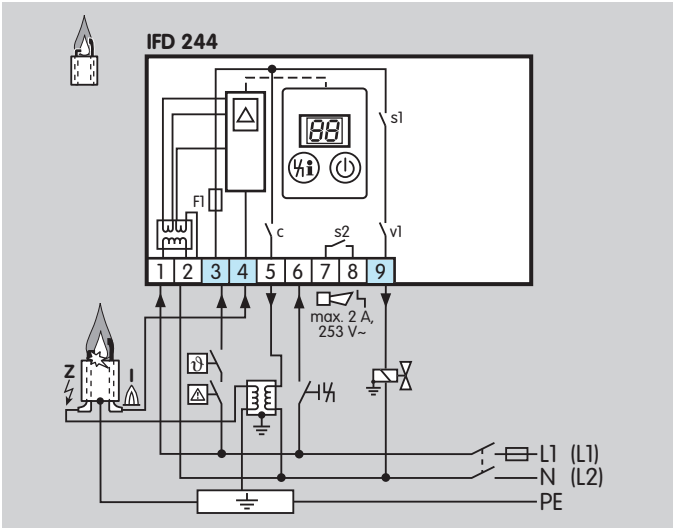

3 Function

3.1 Connection diagrams

For the explanation of symbols, see Legend.

For cable selection and wiring, see Project planning information.

The automatic burner control units IFD 244 are designed for double-electrode operation. Single-electrode operation is not possible.

IFD 244

The burner is ignited by an external ignition transformer.

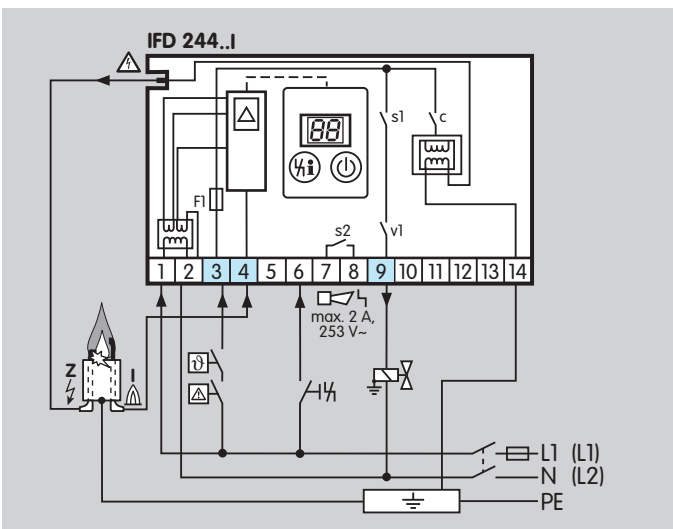

IFD 244..I

The burner is ignited by an integrated ignition unit.

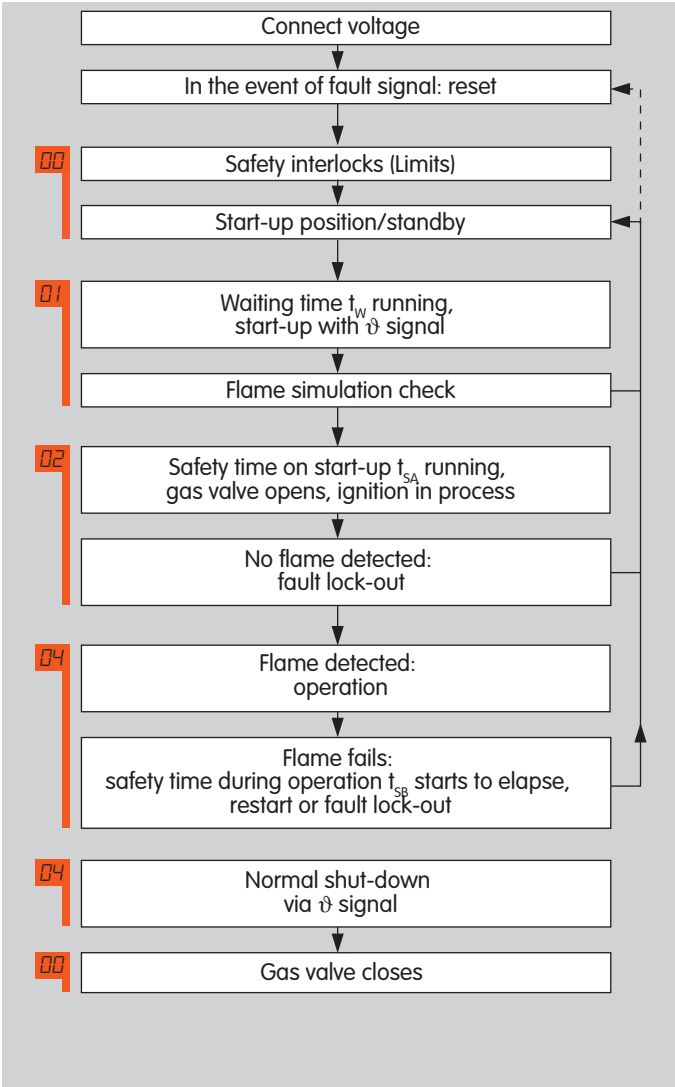

3.2 Program sequence

Normal start-up

If, after applying voltage, an "old" fault is still being signalled, it will be necessary to reset this first. The safety interlocks are closed, the IFD reverts to start-up position/standby and conducts a self-test. If it does not determine a malfunction of the internal electronic circuitry or of the flame sensor, the flame simulation check then commences. This takes place in start-up position during the waiting time tW. If no flame simulation is detected during that period, the safety time on start-up tSA then starts to elapse. Voltage is supplied to the gas valve and ignition transformer. The burner starts. Once the safety time on start-up tSA has elapsed, the start-up process is completed.

Start-up without flame signal

If, after the gas valve has opened and the ignition has been activated, no flame is detected during the safety time on start-up tSA, a fault lock-out will then occur.

Behaviour in the event of flame failure during operation

If the flame fails during operation, the IFD 244 will perform a fault lock-out within the safety time during operation tSB. The valve is closed immediately. The burner will be restarted once. If the burner does not function, a fault lock-out occurs.

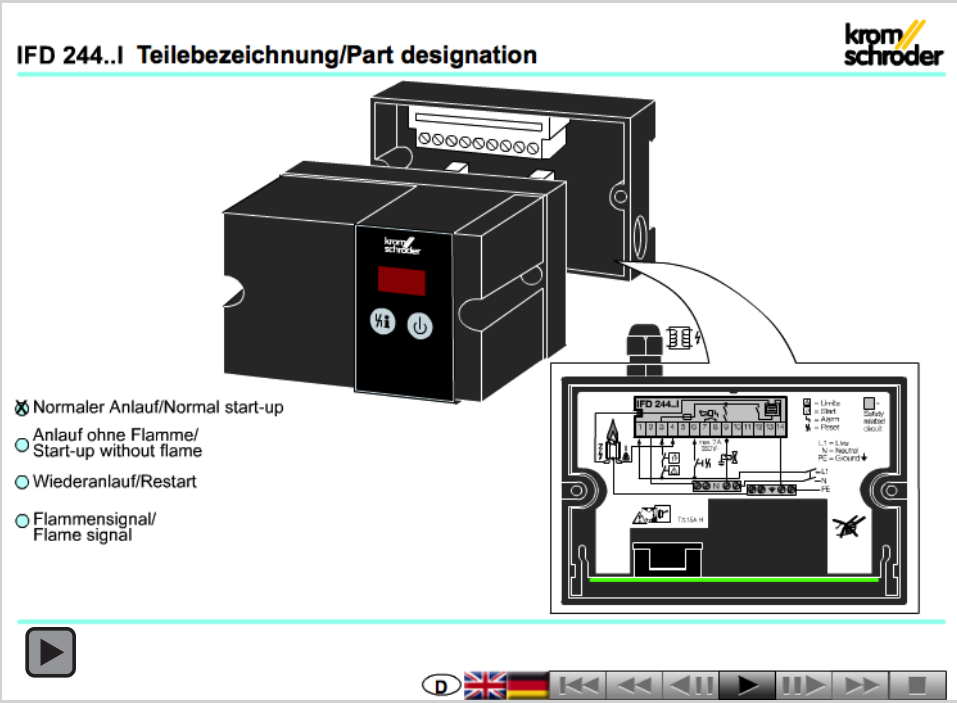

3.3 Animation

The interactive animation shows the function of the automatic burner control unit IFD 244.

Click on the picture. The animation can be controlled using the control bar at the bottom of the window (as on a DVD player).

To play the animation, you will need Adobe Reader 6 or a newer version. If you do not have Adobe Reader on your system, you can download it from the Internet. Go to www.adobe.com, click on "Get Adobe Reader" and follow the instructions.

If the animation does not start to play, you can download it from the document library (Docuthek) as an independent application.

3.4 Program status and fault messages

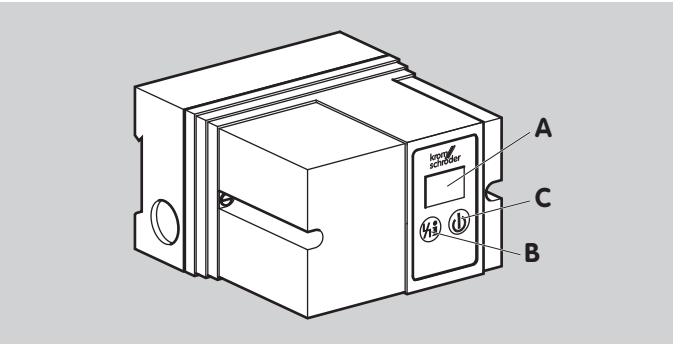

Operating controls

A: 2-digit 7-segment display for indicating program status and flame signal.

B: Reset/Information button to reset the system after a fault or to call up the flame signal on the display.

C: Mains On/Off button.

The 7-segment display (**A**) shows the program status. In the event of a fault, the IFD halts the program run and the display starts to blink. The program status and cause of the fault are displayed in coded form.

Program status	DISPLAY	Fault message (blinking)
Unit is switched off	--	
Start-up position/standby	00	
Waiting time/Pause time	01	Flame simulation
Safety time on start-up t_{SA}	02	Start-up without flame signal
Operation	04	Flame failure during operation
	09	Oscillating thermostat signal
	10	Too many remote resets
	52	Permanent remote reset
	53	Time between two start-ups is too short

3.4.1 Reading off the flame signal

Internally:

The flame signal can be called up on the display by pressing the Reset/Information button (for 2 seconds). The flame signal of the burner is indicated in µA. A value between 0 and 25 µA is displayed.

Important!

When using an external µ-ammeter, you must make sure that this µ-ammeter cannot simulate any flame signal.

4 Parameters

Description	Parameter	Value range	Factory default setting
Burner flame signal	01	0 – 25 µA	
Burner switch-off threshold	04	2 µA	2 µA
Burner restart	12	1	1
Safety time during operation for V1 t_{SB}	14	1; 2 s [1]	
Safety time on start-up t_{SA}	22	3; 5; 10 s [1]	
Last fault	81		
Second to last occurring fault	82		
Third to last occurring fault	83		
	…		
Tenth to last occurring fault	90		

1) Quote in your order.

On parameterisation, ensure that the program sequence matches the application. Select the parameters so that the burner can be operated as intended in all operating phases.

4.1 Scanning the parameters

During operation, the 7-segment display shows the program status.

The flame signal and all following parameters of the IFD can be scanned one after the other by repeatedly pressing the Reset/Information button (for 2 s).

In the event of a fault, the IFD halts the program run, the display blinks and it then displays the cause of the fault in coded form.

4.2 Flame control

4.2.1 Burner flame signal

Parameter 01

Flame signal of the burner, display in µA, measuring range: 0 – 25 µA.

4.2.2 Switch-off threshold of the flame amplifier

Parameter 04

The sensitivity at which the burner control unit still detects a flame is set at the factory to 2 µA.

The measured flame signal of the monitored burner should be at least 3 µA (empirical value) higher than the pre-set switch-off threshold.

4.3 Behaviour during start-up

4.3.1 Normal start-up

Parameter 22

The safety time t_{SA} can be displayed or read on the type label.

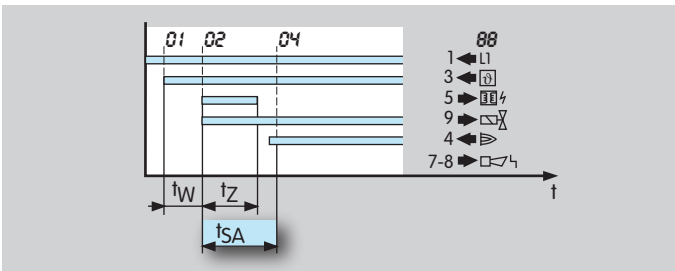

Once the start-up signal (ϑ) has been applied, the automatic burner control unit checks the burner for flame simulation during the waiting time t_W. If no flame simulation is detected during that period, the safety time on start-up t_{SA} (3, 5 or 10 s) then starts to elapse. This forms the minimum operating time of the automatic burner control unit and the burner. Voltage is supplied to the gas valve and ignition transformer. After the safety time on start-up t_{SA} has elapsed and the flame signal has been received, the display shows the current program status 04.

4.3.2 Start-up without flame signal

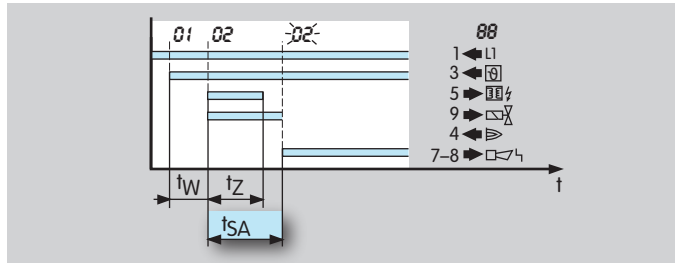

If, after a successful burner start, the automatic burner control unit does not detect a flame signal during the safety time on start-up t_{SA}, a fault lock-out will occur (fault signalling contact between terminals 7 and 8 closes). During the entire safety time on start-up t_{SA}, the gas valve V1 is open. The display blinks and indicates 02.

4.3.3 Flame simulation

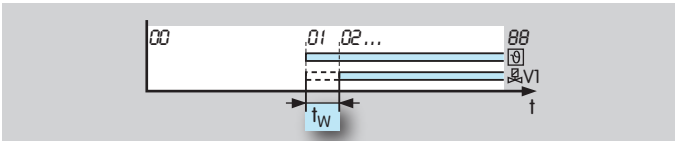

The flame simulation check is conducted after applying the start-up signal (ϑ) during the waiting time t_W.

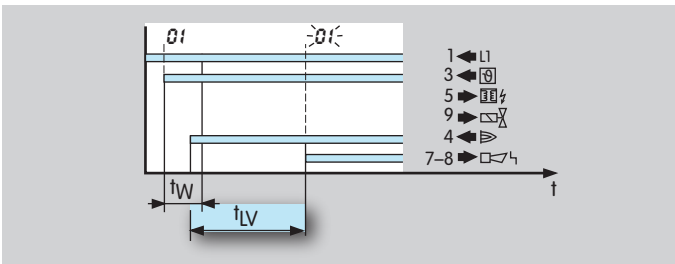

If flame simulation is signalled during start-up, the flame simulation delay time t_{LV} starts to elapse. If the flame simulation is discontinued during the flame simulation delay time t_{LV} (max. 25 s), the burner will start up. Otherwise, a fault lock-out occurs. The display blinks and indicates [01].

Start-up signal, safety interlock

The start-up signal is the same as the signal in the safety interlock.

If the start-up/safety interlock signal drops more than three times in succession during start-up, an inadmissible quantity of non-combusted gas can reach the combustion chamber during the safety time via open gas valves. Therefore, a fault lock-out is performed on the automatic burner control unit IFD 244 following three consecutive drops of the start-up/safety interlock signal (blinking [09]).

4.4 Behaviour during operation

4.4.1 Safety time during operation tSB for V1 and V2

Parameter 14

This indicates the safety time during operation t_{SB} for valve V1. Standard: 1 s. The IFD is also available with a safety time during operation t_{SB} of 2 s. Prolonging the time increases the installation availability in the case of brief-duration signal fades (e.g. fades of the flame signal). In accordance with EN 746-2, the safety time of the installation during operation (including closing time of the valves) may not exceed 3 seconds (note the requirements of the Standards).

4.4.2 Restart following flame failure

Parameter 12 = 1

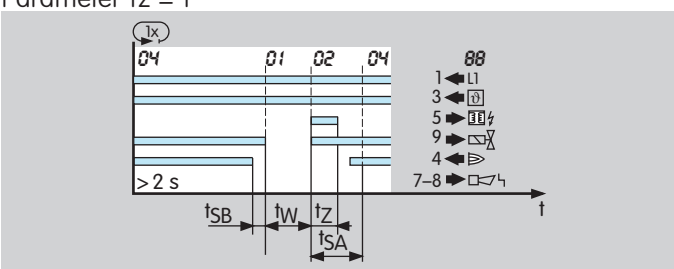

If the IFD detects a flame failure after a minimum operating time of 2 s, the valve is closed within the time t_{SB}.

The automatic burner control unit now attempts to restart the burner once.

If the burner does not function on restart, a fault lock-out occurs. The display blinks and indicates 02. After a fault lock-out, the IFD 244 can be reset, either by using the button on the front panel or an external button. Several automatic burner control units can be reset in parallel using the external button. The IFD 244 cannot be reset by mains failure. The fault signalling contact does, however, open as soon as the mains voltage fails.

If, on restart, the automatic burner control unit detects a flame signal within the safety time on start-up t_{SA}, it continues burner operation. The display indicates the current program status 04.

In accordance with EN 746-2, a restart may be conducted only if the safety of the installation is not impaired. Restart is recommended for burners which occasionally display unstable behaviour during operation.

The precondition for a restart is that the burner can restart as intended (in all operating phases). It must be ensured in this case that the program sequence started by the IFD matches the application.

5 Replacement possibilities

The automatic burner control unit IFD 244 is interchangeable with the IFS 244 and provides almost all of the previous functions of the IFS 244.

The housing dimensions and hole pattern are unchanged.

The new upper section of the housing will fit on the existing lower section (for further information see operating instructions "Automatic burner control unit for continuous operation IFD 244").

IFS 244	IFD 244
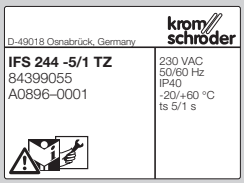	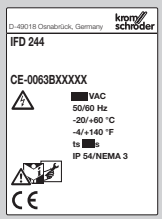
Complies with requirements in accordance with EN 298: 1992	Complies with requirements in accordance with EN 298: 2003
Signalling contact for fault signal	Signalling contact for fault signal
Fault signal remains applied with no mains voltage supplied	Fault signal remains applied with mains voltage supplied
Safety shut-down in the event of flame simulation	Fault lock-out in the event of flame simulation
Flame signal display using external measuring instrument	Flame signal can be called up on the 2-digit 7-segment display
Flame simulation indicated by yellow LED	Flame simulation indicated on 7-segment display = 01
Operation indicated by yellow and green LEDs	Operation indicated on 7-segment display = 04
Mains voltage = 230 V	Mains voltage = 120, 230 V
No protection against frequent remote resets	Protection against frequent remote resets (blinking 10)
No protection against frequent switch-off during t_{SA}	Protection against frequent switch-off during t_{SA} (blinking 09)

6 Selection

6.1 Determining the safety time tSA

The safety time on start-up t_{SA} = 3 s, 5 s or 10 s should be indicated when ordering.

The details are based on the 1997 edition of EN 746-2.

EN 746-2

	P_N	t_{SA}
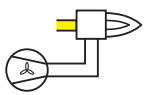	70 kW	**5 s**
	> 70 kW*	**3 s**
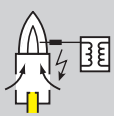	350 kW	**10 s**
	> 350 kW**	**5 s**
	0 ➔ ∞*	**10 s**

* P_Z 0,1×P_N, P_{Zmax} = 350 kW

** P_Z 0,33×P_N, P_{Zmax} = 350 kW

P_N = rated capacity

P_Z = Pilot burner capacity (this is defined via the gas valve V1)

The safety time on start-up t_{SA} depends on the burner type, the burner capacity and the respective application.

6.1.1 Calculating the safety time t_{SA}

- (●) Burner with mechanical combustion air supply
- ( ) Natural draught burner with direct ignition
- ( ) Natural draught burner with pilot burner

Burner capacity 1.00 kW

Safety time on start-up t_{SA} 5 s

6.2 Selection table

	2	4	4	-3	-5	-10	/1	/2	Q	W	I
IFD	●	●	●	●	●	●	●	●	●	●	○

● = *standard*, ○ = *available*

Order example
IFD 244-5/1W

6.2.1 Type code

Code	Description
IFD	Automatic burner control unit
2	Series 200
4	Ionisation control
4	Restart
-3	Safety time on start-up t_{SA}: 3 s
-5	5 s
-10	10 s
/1	Safety time during operation t_{SB}: 1 s
/2	2 s
	Mains voltage:
Q	120 V AC, 50/60 Hz
W	230 V AC, 50/60 Hz
I	Integrated electronic ignition

7 Project planning information

7.1 Cable selection

Use mains cable suitable for the type of operation and complying with local regulations.

Signal and control line: max. 2.5 mm².

Cable for burner earth/PE wire: 4 mm².

Do not route IFD cables in the same cable duct as frequency converter cables or other cables emitting strong fields.

7.1.1 Ionisation cable and ignition cable

Use unscreened high-voltage cable for both lines (see "Accessories").

Recommended cable length:
Ionisation cable – max. 75 m,

Ignition cable:
IFD 244: max. 5 m, recommended < 1 m (with TZI/TGI),
IFD 244..I: max. 1 m, recommended < 0.7 m.

The longer the ignition cable, the lower the ignition capacity.

Avoid external electrical interference.

Lay cables individually and not in a metal conduit, if possible.

Lay the ignition cable and ionisation cable as far apart as possible.

Screw the ignition cable securely into the high-voltage connection on the IFD 244..I and feed it out of the unit on the shortest possible route (no loops).

Only use radio interference suppressed electrode adapters (with 1 kΩ resistor) for ignition electrodes, see "Accessories".

7.2 Star electrodes

We recommend using 7.5 kV ignition transformers on burners with star electrodes.

7.3 Purge

In the case of multiple burner applications, burners with forced air supply are used. The air for combustion and pre-purge is supplied by a central fan controlled by a separate logic. This logic determines the purging time and controls an external relay that switches the air valve to purge.

The automatic burner control unit must not be activated during purging. This is achieved by interrupting the safety interlock, amongst other methods.

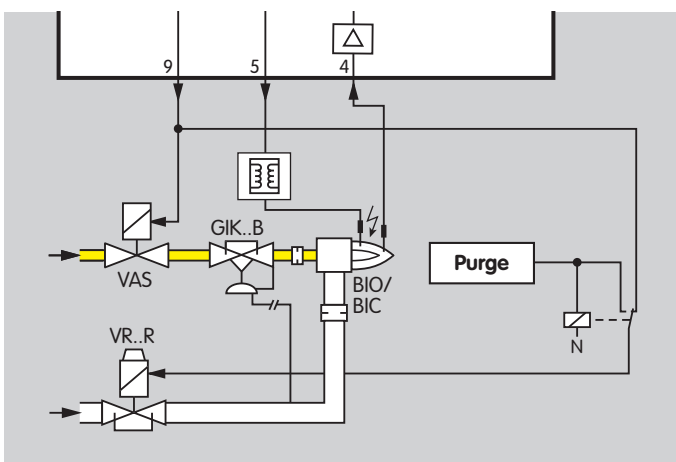

7.4 Emergency stop in the event of fire or electric shock

If there is a risk of fire, electric shock or similar, inputs L1, N and 3 (start-up/safety interlock signal) of the IFD should be disconnected from the electrical power supply.

Important! This should be reflected in the wiring on site!

7.5 Emergency stop triggered by safety interlock

The safety interlock turns off the power to the input 3 (start-up/safety interlock signal), such as in the event of air deficiency or similar.

7.6 Overload protection

To protect the unit against overload by frequent cycling, only a specific number of start-up attempts can be carried out by the IFD. The maximum number of start-up attempts per minute depends on the safety time t_{SA} and the ignition unit.

t_{SA} [s]	t_Z [s]	Type of ignition	Cycle lock [s]
3	1.8	External TZI	10
5	3	External TZI	12
10	6	External TZI	15
3	1.8	IFD..I	36
5	3	IFD..I	60
10	6	IFD..I	120

If too many start-up attempts are made, 53 flashes on the display to indicate a fault.

7.7 Parallel reset

Several automatic burner control units can be reset in parallel using an external button. The IFD 244 cannot be reset by mains failure.

7.8 Remote reset

Permanent

The unit cannot be reset by permanent remote reset: If a remote reset signal is permanently applied to terminal 6, 52 flashes on the display as a warning signal. The IFD continues operation until it locks off.

Automatic (PLC)

Check whether automatic remote reset (PLC) complies with standards (reset for no longer than 1 second).

If a fault is acknowledged by remote reset too often, 10 flashes on the display to indicate a fault (too many remote resets). The error can only be acknowledged with the Reset/Information button on the unit.

The burner malfunction must be remedied. The malfunction can not be remedied by changing the method of activation.

7.9 Behaviour in the event of flame failure

If the flame fails during operation, the IFD 244 performs a fault lock-out. The valve is closed immediately. The burner will be restarted once. If the burner does not function, a fault lock-out occurs.

7.10 Wiring

The IFD is suitable for hard wiring only. Do not reverse phase and neutral conductor. Different phases of a three-phase current system must not be installed at the IFD.

No voltage may be connected to the valve and ignition outputs.

Do not use unused terminals as support terminals.

The signalling contacts for operating and fault signals do not meet the requirements for safety extra low voltage (SELV/PELV).

The burner should be adequately earthed. Incorrect wiring and an insufficient earth connection can cause damage to the equipment during single-electrode operation.

7.11 Note on EC type-examination

Since EN 298 (1993) does not describe all functions of the IFD, the operator is responsible for ensuring that all parameters and functions are matched to the respective application.

7.12 Installation of solenoid valves for gas

During the safety time on start-up tSA, the burner must be supplied with gas and ignited. For this reason, the gas solenoid valve should be installed as close as possible to the burner itself.

7.13 Flame control

With ionisation sensor

The IFD generates an alternating voltage (230 V AC) between the sensing electrode and burner earth. The flame rectifies this voltage. Only the DC signal (> 2 µA) is recognised by the automatic burner control unit as a flame.

A flame cannot be simulated by a short-circuit.

7.14 Flame signal cut-off point

The automatic burner control unit IFD is set to 2 µA at the factory.

8 Accessories

8.1 High-voltage cable

FZLSi 1/7 -50°C (-58°F) to 180°C (356°F),
Order No.: 04250410.

FZLK 1/7 -5°C (23°F) to 80°C (176°F),
Order No.: 04250409.

8.2 Radio interference suppressed electrode adapters

Plug cap, 4 mm (0.16 inch), interference-suppressed,

Order No. 04115308.

Straight adapter, 4 mm (0.16 inch), interference-suppressed,

Order No. 04115307.

Straight adapter, 6 mm (0.2 inch), interference-suppressed,

Order No. 04115306.

9 Technical data

Mains voltage for grounded and ungrounded mains:
120 V AC, -15/+10%, 50/60 Hz,
230 V AC, -15/+10%, 50/60 Hz.

Safety time on start-up tSA: 3, 5 or 10 s.

Safety time during operation tSB: < 1 s, < 2 s.

Ignition time tZ: approx. 2, 3 or 6 s.

Power consumption:
IFD 244: approx. 9 VA,
IFD 244..I: approx. 9 VA + 25 VA during ignition.

Valve connections: 1.

Output voltage for valves and ignition transformer = mains voltage.

Contact rating:
Ignition output: max. 2 A, cos φ = 0.2,
Valve output: max. 1 A, cos φ = 1,
Signalling contacts: max. 2 A, 253 V AC,
Max. number of operating cycles: 250,000.

Max. number of operating cycles:
Reset button: 1000,
Mains button: 1000.

Signal inputs:

Input voltage	120 V AC	230 V AC
Signal "1"	80 – 122.5 V	160 – 253 V
Signal "0"	0 – 20 V	0 – 40 V
Frequency	50/60 Hz	

Input current signal inputs: Signal "1": typ. 2 mA.

Flame control:
Sensor voltage: approx. 230 V AC,
Sensor current: > 2 µA,
Max. sensor current: ionisation < 25 µA.

Length of sensor cable:
max. 75 m.

Ignition cable:
IFD 244: max. 5 m, recommended < 1 m (with TZI/TGI),
IFD 244..I: max. 1 m, recommended < 0.7 m.

IFD 244..I: Ignition voltage: 22 kVpp,
Ignition current 25 mA,
Spark gap: 2 mm, max. 5 mm.

Fuse in unit: F1: T 3.15A H 250 V pursuant to IEC 127-2/5.

Ambient temperature: -20 to +60°C (-4 to +140°F),
Relative humidity: no condensation permitted.

Enclosure: IP 54 pursuant to IEC 529.

Overvoltage category III pursuant to EN 60730.

Cable gland: M16.

Installation position: any.

Weight:
IFD 244: 610 g,
IFD 244..I: 770 g.

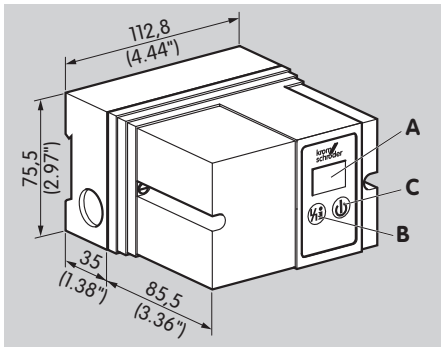

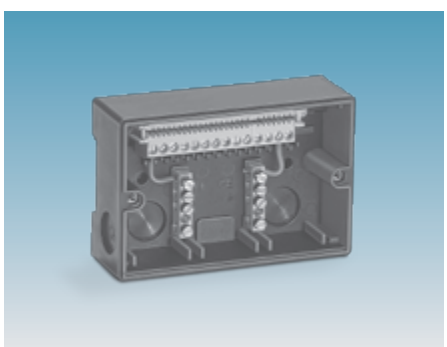

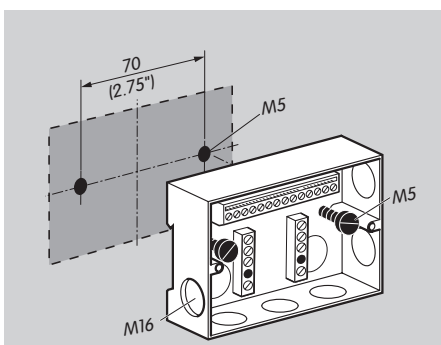

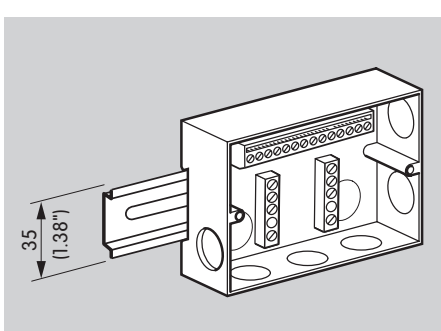

9.1 Operating controls

A: 2-digit 7-segment display to display program status and flame signal.

B: Reset/Information button to reset the system after a fault or to call up the flame signal on the display.

C: Mains On/Off button

9.2 Installation

The unit can be installed in any position. The installation position should however be selected carefully in order to ensure that the display can easily be read.

The housing is made of impact-resistant plastic. The upper section containing the detection circuitry is a push connection fit into the lower section. The connection terminals, earthing strip and neutral bus are located in the lower section. The upper section of the housing is attached to the lower section using two screws.

The lower section can either be snapped onto a DIN rail or secured with two M5 screws. In order to obtain enclosure IP 54, two sealing washers must be placed beneath the M5 screws.

The housing has 6 knock-out holes for M16 plastic screw connectors.

10 Maintenance cycles

The automatic burner control unit IFD 244 requires little servicing.

11 Legende

88	Display
88	Blinking display
	Safety interlocks (Limits)
	Start-up signal
	Ignition transformer
	Gas valve
	Flame signal
	Fault signal
i	Reset/Information
	Input signal
	Output signal
Z	Ignition/High voltage
I	Ionisation
	Input/Output safety circuit
t_W	Waiting time
t_{LV}	Flame simulation delay time
t_Z	Ignition time
t_{SA}	Safety time on start-up (3, 5 or 10 s)
t_{SB}	Safety time during operation (< 1 s or < 2 s)

12 Glossary

12.1 Start-up position/standby

After switching on, the unit switches to the start-up position/ standby. There is no fault lock-out. The unit is ready for start-up. The display indicates 00.

12.2 Waiting time t_W

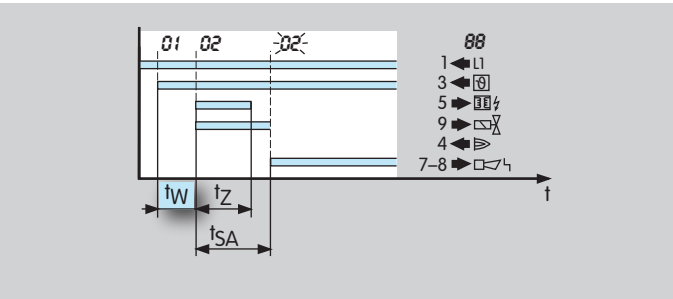

Once the start-up signal ϑ has been applied, the waiting time t_W starts to elapse. During this time, a self-test is conducted to detect errors in internal and external circuit components. If no malfunction is detected, the burner will start up.

12.3 Safety time on start-up t_{SA}

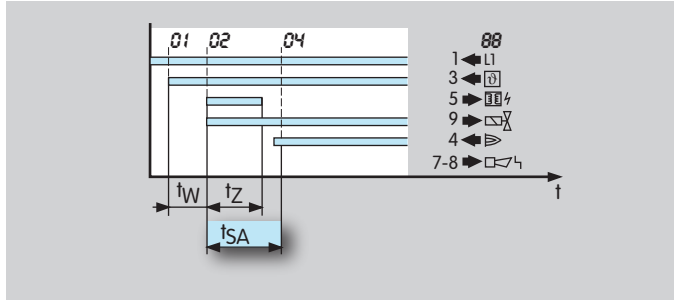

This refers to the period of time between switching on and switching off of the gas valve V1, when no flame signal is detected. The safety time on start-up t_{SA} (3, 5 or 10 s) is the minimum operating time of the burner and automatic burner control unit.

12.4 Ignition time t_Z

If no malfunction is detected during the waiting time t_W, the ignition time t_Z then starts to elapse. Voltage is supplied to the gas valve V1 and the ignition transformer and the burner is ignited. The duration of the ignition time is either 2, 3 or 6 seconds (see Technical data).

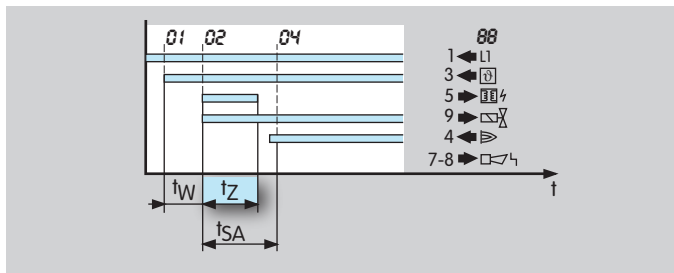

12.5 Flame simulation/Flame simulation delay time t_{LV}

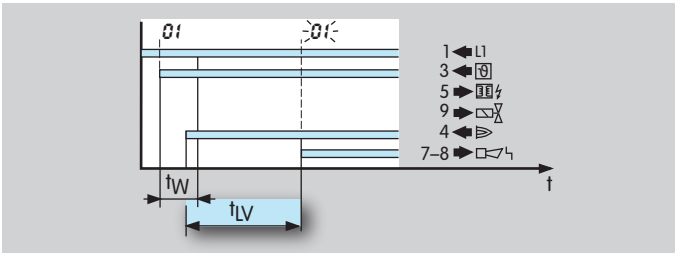

Flame simulation is an incorrect flame signal. If flame simulation is detected during start-up, the flame simulation delay time tLV (max. 25 s) starts to elapse. If the flame simulation is discontinued during the flame simulation delay time t_{LV}, start-up can be initiated or operation continued. Otherwise, a fault lock-out occurs.

12.6 Safety time during operation t_{SB}

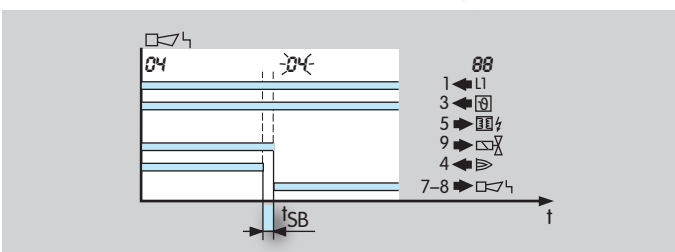

If the flame fails during operation, the valves are closed within the safety time t_{SB}.

The default safety time during operation t_{SB} is 1 second. In accordance with EN 746-2, the safety time of the installation during operation (including closing time of the valves) may not exceed 3 seconds (see "Project planning information"). Note the requirements of the Standards!

12.7 Flame signal

If a flame is detected, the flame detector will supply a flame signal. A DC ammeter is installed in the flame signal cable in order to measure the flame signal intensity. The amperage is usually between 1 µA and 30 µA. Voltage surges, short-circuits or leak currents in the flame signal cable produce an alternating current signal and are recorded as a fault with both types of monitoring.

12.8 Fault lock-out

In the event of a fault lock-out, all valves are closed and a fault signalled. Resetting must take place manually following a fault lock-out.

12.9 Safety interlocks (Limits)

The limiters in the safety interlock (linking of all the relevant safety control and switching equipment for the use of the application, for example S_{TB} (safety temperature limiter), Gas_{min}, Gas_{max}...) must isolate input 3 from the voltage supply.

12.10 Gas valve V1

The gas valve V1 is opened at the start of the safety time on start-up t_{SA}. It remains open in the event of a fault, or until the burner is switched off.

12.11 Continuous operation

The gas burner has been running for longer than 24 hours and was not switched off during that time.

Feedback

Finally, we are offering you the opportunity to assess this "Technical Information (TI)" and to give us your opinion, so that we can improve our documents further and suit them to your needs.

Clarity

- ○ Found information quickly
- ○ Searched for a long time
- ○ Didn't find information
  What is missing?
- ○ No answer

Comprehension

- ○ Coherent
- ○ Too complicated
- ○ No answer

Scope

- ○ Too little
- ○ Sufficient
- ○ Too wide
- ○ No answer

Use

- ☐ To get to know the product
- ☐ To choose a product
- ☐ Planning
- ☐ To look for information

Navigation

- ○ I can find my way around
- ○ I got "lost"
- ○ No answer

My scope of functions

- ○ Technical department
- ○ Sales
- ○ No answer

Remarks

(Adobe Reader 7 or higher required)

Contact

Elster GmbH
Postfach 2809 · 49018 Osnabrück
Strotheweg 1 · 49504 Lotte (Büren)
Germany

T +49 541 1214-0
F +49 541 1214-370
info@kromschroeder.com

www.kromschroeder.com
www.elster.com

The current addresses of our international agents are available on the Internet:

www.kromschroeder.com → Sales

Kromschröder, a product brand of the Elster Group

We reserve the right to make technical modifications in the interests of progress.

Copyright © 2007 Elster Group
All rights reserved.

03250752