RM7800L1087, RM7840G1022, RM7840L1075, EC7840L1014 RM7800L2087, RM7840G2022, RM7840GL2075, EC7840L2014 Relay Modules with Valve Proving

INSTALLATION INSTRUCTIONS

APPLICATION

The Honeywell RM7800L/40G,L and EC7840L Relay Modules are microprocessor-based integrated burner controls for automatically fired gas, oil, or combination fuel single burner applications. The RM7800L/40G,L and EC7840L Relay Modules are used for UL/CSA Modulating and FM/IRI Modulating burner applications. The RM7800L/40G,L, EC7840L system consists of a Relay Module. Keyboard Display Modules (standard with RM7800), Dust Cover (standard with RM7840/EC7840L), Subbase, Amplifier, and Purge Card. Options include DATA CONTROLBUS MODULE™, Remote Display Mounting, First-Out Expanded Annunciator and Modbus™ communications capable.

Functions provided by the RM7800L/40G,L, EC7840L include automatic burner sequencing, flame supervision, system status indication, system or self-diagnostics and troubleshooting.

Using the S7800A2142 Keyboard Display (standard on RM7800L2087) the following features can be set up:

- **Post Purge time—Up to 60 minutes—Device shipped with 15 seconds Post purge.**
- **Valve Proving features including:**
  - VPS test time
  - When (Never, Before, After, Split or Both)
- **See S7800A1142 Instructions (65-0288), also see S7800A2142 Instructions. Series 5 can be programmed for Modbus communication.**

At commissioning time, the Valve Proving System may be scheduled to occur at one of five different times:

- **Never—Device default as received—Valve proving does not occur.**
- **Before—Valve proving before run concurrent with Pre-Purge.**
- **After—Valve proving occurs after the Run state, before the device goes to Standby (Concurrent with Post-Purge, if selected.)**
- **Both—Valve proving occurs at both times Before and After, noted above.**
- **Split—The main valve 2 (MV2) (high pressure) seat test is performed at the Before time and the main valve 1 (MV1) (low pressure) seat test is performed during the After time.**

The following assumptions apply when using the RM7840G,L, RM7800L, EC7840L:

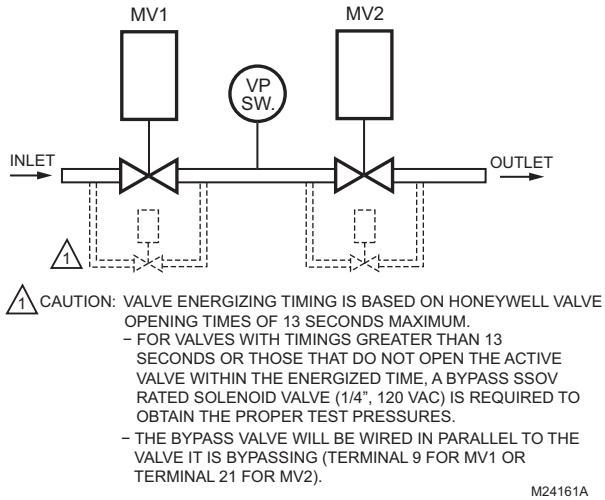

Fig. 1. The valve proving system.

MV1—Wired to terminal 9. It is located in the most upstream position of the main gas valve train.

VPS—Valve Proving Switch: Setpoint at 1/2 of Main Valve inlet pressure.

MV2—Wired to terminal 21. It is the main valve located closest to the burner.

The PII—Pre-Ignition Interlock (or Proof of Closure Switch) for terminal 20 can be installed on MV1, MV2, or as a series connection through both valves.

Appendix B lists many wiring options for single and dual fuel along with the Valve Proving options.

SIL3 Capable

32-00142-01

SPECIFICATIONS

Electrical Ratings, see Table 3:
Voltage and Frequency:
RM78xx—120 Vac (+10/-15%), 50 or 60 Hz (±10%).
EC78xx—220–240 Vac (+10/-15%), 50 or 60 Hz (±10%).
Power Dissipation: RM7800/RM7840/EC7840L: 10W maximum in the Run mode.

Maximum Total Connected Load: 2000 VA.

Fusing: 15A maximum, Type SC or equivalent Fast Blow.

Environmental Ratings:
Ambient Temperature:
Operating: -40°F to +140°F (-40°C to +60°C).
Storage: -40°F to +150°F (-40°C to +66°C).
Humidity: 85% relative humidity continuous, noncondensing.
Vibration: 0.5G environment.

SIL 3 Capable:
RM7800/RM7840E, G, L, M are SIL 3 Capable in a properly designed Safety Instrumented system. See http://www.exida.com/SAEL/Honeywell_7800 for Certificate Agreement.

Approvals: RM7800L/40G,L:
Underwriters Laboratories Inc. Listed: File No. MP268, Guide No. MCCZ.
Factory Mutual Approved: Report No. 1V9A0.AF.
Swiss Re (formerly IRI): Acceptable.
Federal Communications Commission, Part 15, Class B—Emissions.

Approvals: EC7840L:
Factory Mutual Approved: *Report No. is still not known.*
Swiss Re (formerly IRI): Acceptable.
Federal Communications Commission, Part 15, Class B—Emissions.

This document provides installation and static checkout instructions. Other applicable publications are:

Publication No.	Product
65-0084	Q7800A,B 22-Terminal Wiring Subbase Product Data
65-0288	S7800A1142 Keyboard Display Module Product Data
65-0091	S7810A Data ControlBus™ Module Product Data
65-0095	S7820 Remote Reset Module Product Data
65-0097	221729C Dust Cover Installation Instructions
65-0101	S7830 Expanded Annunciator Product Data
65-0109	R7824, R7847, R7848, R7849, R7851, R7852, R7861, R7886 Flame Amplifiers for the 7800 SERIES Product Data
65-0131	221818A Extension Cable Assembly Product Data
65-0229	7800 SERIES Relay Modules Checkout and Troubleshooting Product Data
65-0249	S7810M ModBus Module

INSTALLATION

When Installing this Product...

1. Read these instructions carefully. Failure to follow them could damage the product or cause a hazardous condition.
2. Check the ratings given in the instructions and marked on the product to make sure the product is suitable for the application.
3. Installer must be a trained, experienced, flame safeguard service technician.
4. After installation is complete, check out the product operation as provided in these instructions.

WARNING
Fire or Explosion Hazard.
Can cause property damage, severe injury, or death.
To prevent possible hazardous burner operation, verify safety requirements each time a control is installed on a burner.

WARNING
Electrical Shock Hazard.
Can cause serious injury or death.
Disconnect the power supply before beginning installation. More than one power supply disconnect may be required.

IMPORTANT

1. *Wiring connections for the relay modules are unique; therefore, refer to Figs. 3, 4, 6, 7, or Appendix B for proper subbase wiring.*
2. *Wiring must comply with all applicable codes, ordinances and regulations.*
3. *Wiring must comply with NEC Class 1 (Line Voltage) wiring.*
4. *Loads connected to the RM7800L/40G,L, EC7840L must not exceed those listed on the RM7800L/40G,L, EC7840L label or the Specifications, see Table 3.*
5. *Limits and interlocks must be rated to simultaneously carry and break current to the ignition transformer, pilot valve, and main fuel valve(s).*
6. *All external timers must be listed or component recognized by authorities who have jurisdiction for the specific purpose for which they are used.*
7. *For on-off gas-fired systems, some authorities who have jurisdiction prohibit the wiring of any limit or operating contacts in series between the flame safeguard control and the main fuel valve(s).*
8. *Two Flame Detectors can be connected in parallel with the exception of Infrared Flame Detectors (C7015, C7915), Ultraviolet (C7927, C7961), or Visible (C7962).*
9. *This equipment generates, uses and can radiate radio frequency energy and, if not installed and used in accordance with the instructions, may cause interference to radio communications. It has been tested and found to comply with the limits for a*
   Class B computing device of Part 15 of FCC rules which are designed to provide reasonable protection against such interference when operated in a commercial environment. Operation of this equipment in a residential area may cause interference; in which case, the users at their own expense may be required to take whatever measures are required to correct this interference.
10. *This digital apparatus does not exceed the Class B limits for radio noise for digital apparatus set out in the Radio Interference Regulations of the Canadian Department of Communications.*

Location

Humidity

Install the relay module where the relative humidity never reaches the saturation point. The relay module is designed to operate in a maximum 85 percent relative humidity continuous, noncondensing, moisture environment. Condensing moisture may cause a safety shutdown.

Vibration

Do not install the relay module where it could be subjected to vibration in excess of 0.5G continuous maximum vibration.

Weather

The relay module is not designed to be weather tight. When installed outdoors, protect the relay module using an approved weather-tight enclosure.

Mounting Wiring Subbase

1. Mount the subbase in any position except horizontally with the bifurcated contacts pointing down. The standard vertical position is recommended. Any other position decreases the maximum ambient temperature rating.
2. Select a location on a wall, burner or electrical panel. The Q7800 can be mounted directly in the control cabinet. Be sure to allow adequate clearance for servicing, installation, access or removal of the RM7800L/40G,L, EC7840L, Expanded Annunciator, Keyboard Display Module, flame amplifier, flame amplifier signal voltage probes, Run/Test Switch, electrical signal voltage probes and electrical field connections.
3. For surface mounting, use the back of the subbase as a template to mark the four screw locations. Drill the pilot holes.
4. Securely mount the subbase using four no. 6 screws.

Wiring Subbase

NOTE: There are now two different subbase models that can be purchased. It is important to note which subbase is compatible with the relay module when purchasing repair or replacement parts.

Series 1000 Subbase

All relay product codes that start with a 1 (example: RM7840G**1**014/U) needs to be used with existing subbase Q7800A1005/U.

Series 2000 Subbase

All relay product codes that start with a 2 (example: RM7840G**2**014/U) needs to be used with subbase Q7800A2005/U.

Subbase Compatibility

Any relay module in the updated 1000 series will be fully backward compatible with any legacy subbase (Q7800A1005/U) installed in the field as well as all newly purchased updated 1000 and 2000 series relay modules.

Any relay module in the new 2000 series will only be able to be installed on subbase Q7800A2005/U, and **will not be** backward compatible with any Q7800A1005/U legacy subbases already installed in the field.

IMPORTANT

Make sure to check the relay model number and check the subbase compatibly prior to ordering or attempting a new installation or field upgrade.

WARNING

Electrical Shock Hazard.
Can cause serious injury, death or equipment damage.
Disconnect the power supply before beginning installation to prevent electrical shock, equipment and control damage. More than one power supply disconnect may be required.

1. For proper subbase wiring, refer to Figs. 3, 4, 6, 7, or Appendix B.
2. For proper remote wiring of the Keyboard Display Module, through a 203541 5-wire Connector, refer to the Specifications for the Keyboard Display Module
(65-0288), Data ControlBus Module™ (65-0091) or Extension Cable Assembly (65-0131).
3. Disconnect the power supply from the main disconnect before beginning installation to prevent electrical shock and equipment damage. More than one disconnect may be required.
4. All wiring must comply with all applicable electrical codes, ordinances and regulations. Wiring, where required, must comply with NEC, Class 1 (Line Voltage) wiring.
5. Recommended wire size and type: see Table 1.
6. Recommended grounding practices: see Table 2.

WARNING

Keyboard Display Module and/or Data Controlbus Module is powered from internally fused low voltage source and shares the voltage supply with Relay Module. The fuse is non-replaceable. Excessive current draw or short at display connection may cause fuse to blow out resulting in dead, unpowered system.

The Keyboard Display Module, Data ControlBus Module™ (for remote mounting or communications), through a 203541 5-wire Connector must be wired in a daisy chain configuration, (1(a)-1(a), 2(b)-2(b), 3(c)-3(c)). The order of interconnection of all the devices listed above is not important. Be aware that modules on the closest and farthest end of the daisy chain configuration string require a 120 ohm (1/4 watt minimum) resistor termination across terminals 1 and 2 of the electrical connectors, for connections over 100 feet.

7. Recommended wire routing of leadwires:
   a. Do not run high voltage ignition transformer wires in the same conduit with the flame detector, Data Controlbus Module™, or Remote Reset Module wiring.
   b. Do not route flame detector, Data Controlbus Module™, or Remote Reset Module leadwires in conduit with line voltage circuits.
   c. Enclose flame detector leadwires without armor cable in metal cable or conduit.
   d. Follow directions in flame detector, Data Controlbus Module™, or Remote Reset Module Instructions.
8. Keyboard Display Module (KDM): Because the KDM is powered from a low voltage, energy limited source, it can be mounted outside of a control panel if it is protected from mechanical damage.

NOTE: A 13 Vdc power supply must be used any time more than one Keyboard Display Module is used.

9. Maximum wire lengths follow:
   a. RM7800L/40G,L, EC7840L leadwires—The maximum length of leadwire is 300 feet to terminal inputs (Control, Pre-Ignition Interlock, Running/Lockout Interlock, High Fire Switch and Low Fire Switch).
   b. Flame Detector leadwires—The maximum flame sensor leadwire length is limited by the flame signal strength.
   c. Remote Reset leadwires—The maximum length of wire is 1000 feet to a Remote Reset pushbutton.
   d. Data Controlbus Module™—The maximum Data Controlbus Module™ cable length depends on the number of system modules connected, the noise conditions and the cable used. The maximum length of all Data Controlbus Module™ interconnecting wire is 1000 feet.
10. Make sure loads do not exceed the terminal ratings. Refer to the label on the RM7800/RM7840/EC7840L or to the ratings in Tables 3, 4 and 5.

Final Wiring Check

1. Check the power supply circuit. The voltage and frequency tolerance must match those of the RM7800L/40G,L, EC7840L. A separate power supply circuit may be required for the RM7800/RM7840/EC7840L. Add the required disconnect means and overload protection.
2. Check all wiring circuits and complete the Static Checkout, see Table 9, before installing the RM7800L/40G,L, EC7840L on the subbase.
3. Install all electrical connectors.
4. Restore power to the panel.

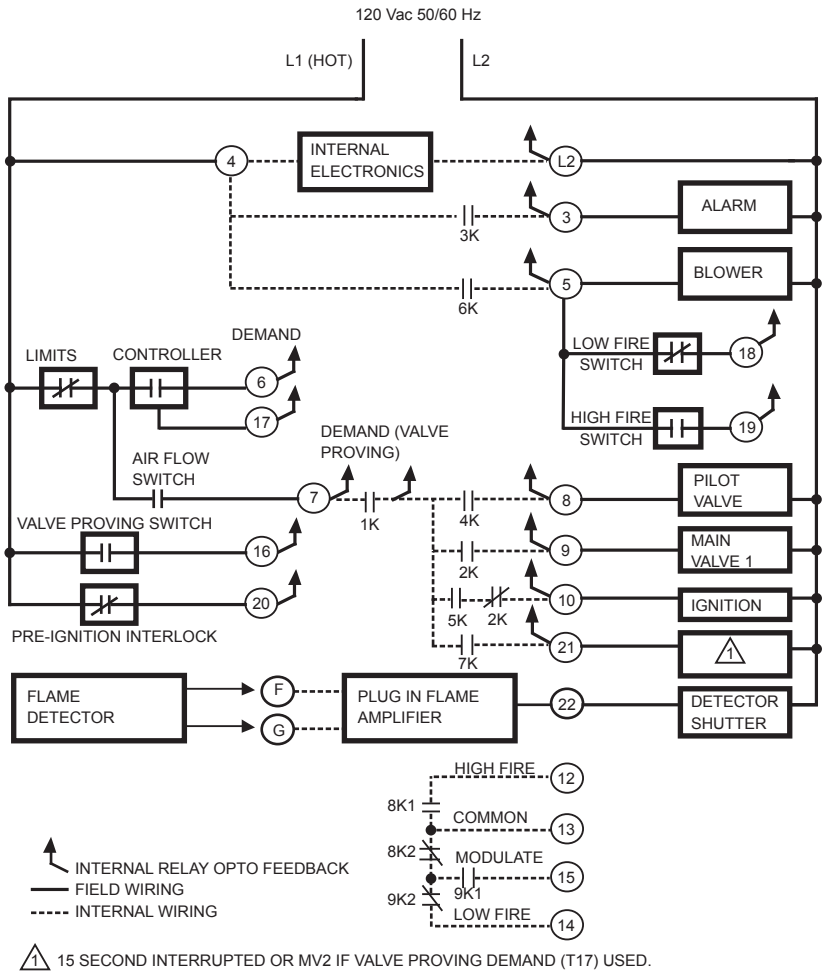

Fig. 2. Internal block diagram of the RM7800L/40L, EC7840L (See Figs. 3, 4, 6 or 7 for individual detailed wiring instructions).

Table 1. Recommended Wire Sizes and Part Numbers.

Application	Recommended Wire Size	Recommended Part Number(s)
Line voltage terminals	14, 16 or 18 AWG copper conductor, 600 volt insulation, moisture-resistant wire.	THW75C, THHN90C.
Keyboard Display Module (KDM)	22 AWG two-wire twisted pair with ground, or five wire.	Belden 8723 shielded cable or equivalent.
Data ControlBus Module™	22 AWG two-wire twisted pair with ground, or five wire.	Belden 8723 shielded cable or equivalent.
Remote Reset Module	22 AWG two-wire twisted pair, insulated for low voltage.	—
13 Vdc full-wave rectified transformer power input.	18 AWG wire insulated for voltages and temperatures for given application.	THW75C, THHN90C.

Table 2. Recommended Grounding Practices.

Ground Type	Recommended Practice
Earth ground (subbase and relay module).	1. Use to provide a connection between the subbase and the control panel of the equipment. Earth ground must be capable of conducting enough current to blow the 15A fuse (or breaker) in the event of an internal short circuit. 2. Use wide straps or brackets to provide minimum length, maximum surface area ground conductors. If a leadwire must be used, use 14 AWG copper wire. 3. Make sure that mechanically tightened joints along the ground path are free of nonconductive coatings and protected against corrosion on mating surfaces.
Signal ground (KDM, Data ControlBus Module™	Use the shield of the signal wire to ground the device to the signal ground terminals [3(c)] of each device. Connect the shield at both ends of the chain to earth ground.

Table 3. Terminal Ratings.

Terminal No.	Description	Ratings	
		120 Vac	220/230/240 Vac
G	Flame Sensor Ground[a]	—	—
Earth G	Earth Ground	—	—
L2(N)	Line Voltage Common	—	—
3	Alarm	1A pilot duty 120 Vac (+10%/-15%), 50 or 60 Hz (±10%)	220-240 Vac (+10%/-15%), 50 or 60 Hz (±10%)
4	Line Voltage Supply (L1)[b]		
5	Burner Motor	9.8 AFL, 58.8 ALR (inrush)	4A at PF = 0.5, 20A Inrush
6	Burner Controller and Limits Demand (NOT Valve Proving)	1 mA	1 mA
7	Lockout/Running Interlock 8A run, 43A inrush	8A run, 43A inrush	—
8	Pilot Valve/Ignition	c	4A at PF = 0.5, 20A Inrush
9	Main Fuel Valve	c	4A at PF = 0.5, 20A Inrush
10	Ignition	c	2A at PF = 0.2
F(11)	Flame Sensor	60 to 220 Vac, current limited	60 to 220 Vac, current limited
12	Firing Rate High Fire	75 VA pilot duty	0.5A at PF = 0.5
13	Firing Rate Common	75 VA pilot duty	0.5A at PF = 0.5
14	Firing Rate Low Fire	75 VA pilot duty	0.5A at PF = 0.5
15	Firing Rate Modulate	75 VA pilot duty	0.5A at PF = 0.5
16	Valve Proving Switch	1 mA	1 mA
17	Demand — Valve Proving	1 mA	1 mA
18	Low Fire Switch Input	1 mA	1 mA
19	High Fire Switch Input (7800/40L only)	1 mA	1 mA
20	Pre-Ignition Interlock Input	1 mA	1 mA
21	Interrupted/Intermittent Pilot Valve/First Stage Oil Valve or MV2	c	4A at PF = 0.5, 20A Inrush
22	Shutter	0.5A	d

[a] The relay module must have an earth ground providing a connection between the subbase and the control panel or the equipment. The earth ground wire must be capable of conducting the current to blow the 15A fuse (or breaker) in event of an internal short circuit. The relay module requires a low impedance ground connection to the equipment frame, which, in turn, requires a low impedance connection to earth ground.

[b] 2000 VA maximum connected load to relay module assembly.

[c] See Tables 4 and 5.

[d] 220/240 Vac to 120 Vac, 10 VA (minimum) stepdown transformer (not provided) must be used to drive the shutter.

Table 4. Combinations for Terminals 8, 9, 10 and 21.

Pilot Fuel 8	Main 9	Ignition 10	Valve 21
C	F	No Load	No Load
B	F	No Load	No Load
No Load	F	No Load	B
F	F	A	No Load
No Load	F	A	F
D	F	A	No Load
No Load	D	A	D
D	D	A	No Load
No Load	D	A	D

Table 5. Explanation of Each Combination.

A	B	C	D	F
4.5A ignition.	50 VA Pilot Duty[a] plus 4.5A ignition.	180 VA ignition plus motor valve with: 660 VA inrush, 360 VA open, 260 VA hold.	2A Pilot Duty.[a]	64 VA Pilot Duty[a] plus motor valves with: 3850 VA inrush, 700 VA open, 250 VA hold.

[a] Pilot Duty refers to solenoid-type valves.

Mounting RM7800L/40G,L, EC7840L Relay Module (Fig. 9)

1. Mount the RM7800L/40G,L, EC7840L vertically on the Q7800 Subbase, or mount horizontally with the knifeblade terminals pointing downward. When mounted on the Q7800A, the RM7800L/40G,L, EC7840L must be in an electrical enclosure.
2. When mounting in an electrical enclosure, provide adequate clearance for servicing, installation and removal of the RM7800L/40G,L, EC7840L, Keyboard Display Module, flame amplifier, flame amplifier signal voltage probes, electrical signal voltage probes, and electrical connections.
   a. Allow an additional two inches below the RM7800L/40G,L, EC7840L for the flame amplifier mounting.
   b. Allow an optional three-inch minimum to both sides of the RM7800L/40G,L, EC7840L for electrical signal voltage probes.

NOTE: 1xxx series is compatible with any subbase. 2xxx series requires the 2xxx subbase.

3. Make sure no subbase wiring is projecting beyond the terminal blocks. Tuck in wiring against the back of the subbase so it does not interfere with the knifeblade terminals or bifurcated contacts.

IMPORTANT

The RM7800L/40G,L, EC7840L must be installed with a plug-in motion rather than a hinge action.

4. Mount the RM7800L/40G,L, EC7840L by aligning the four L-shaped corner guides and knifeblade terminals with the bifurcated contacts on the wiring subbase and securely tighten the two screws without deforming the plastic.

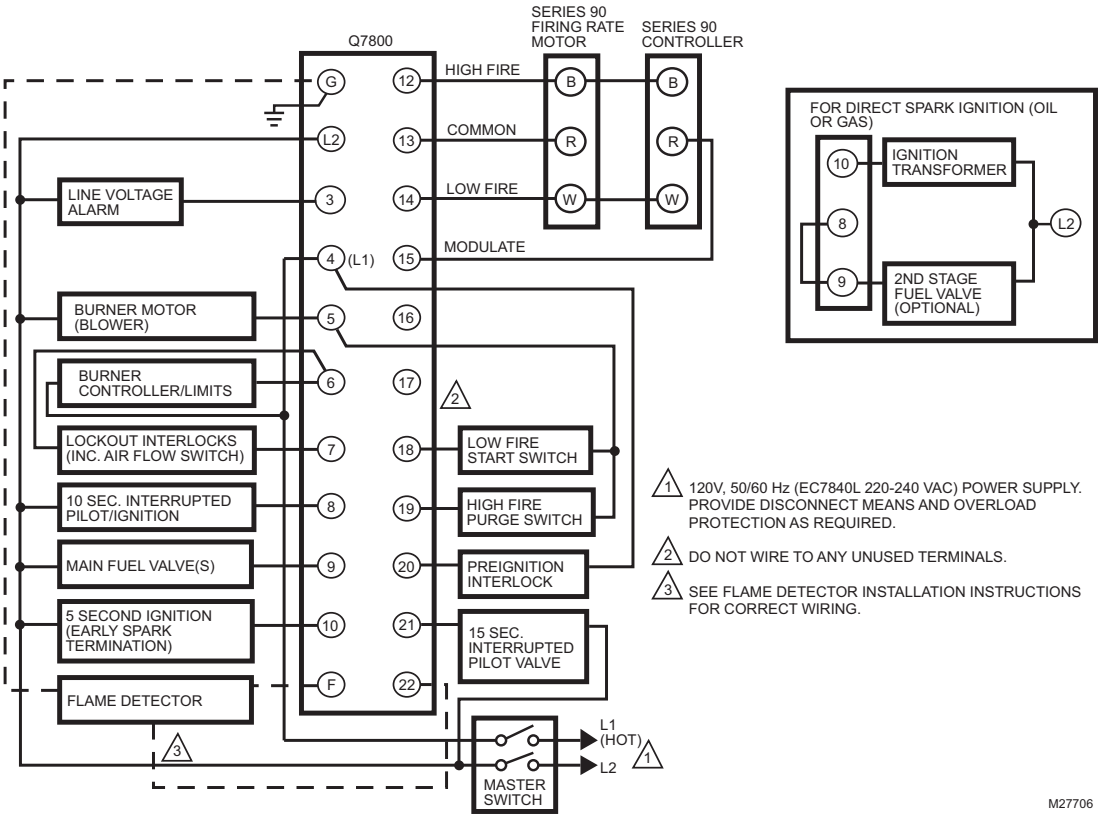

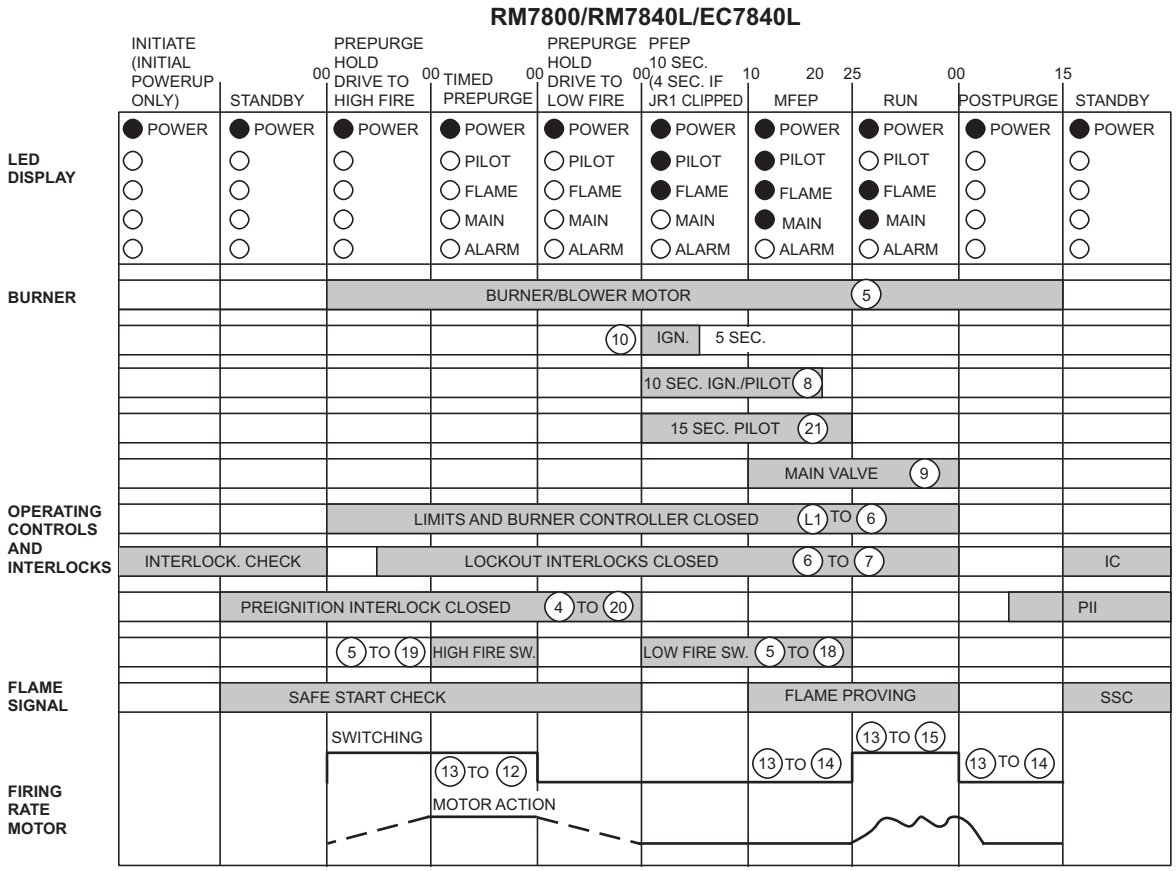

Fig. 3. Typical wiring subbase and sequence for RM7800L/40L, EC7840L without enabled Valve Proving.

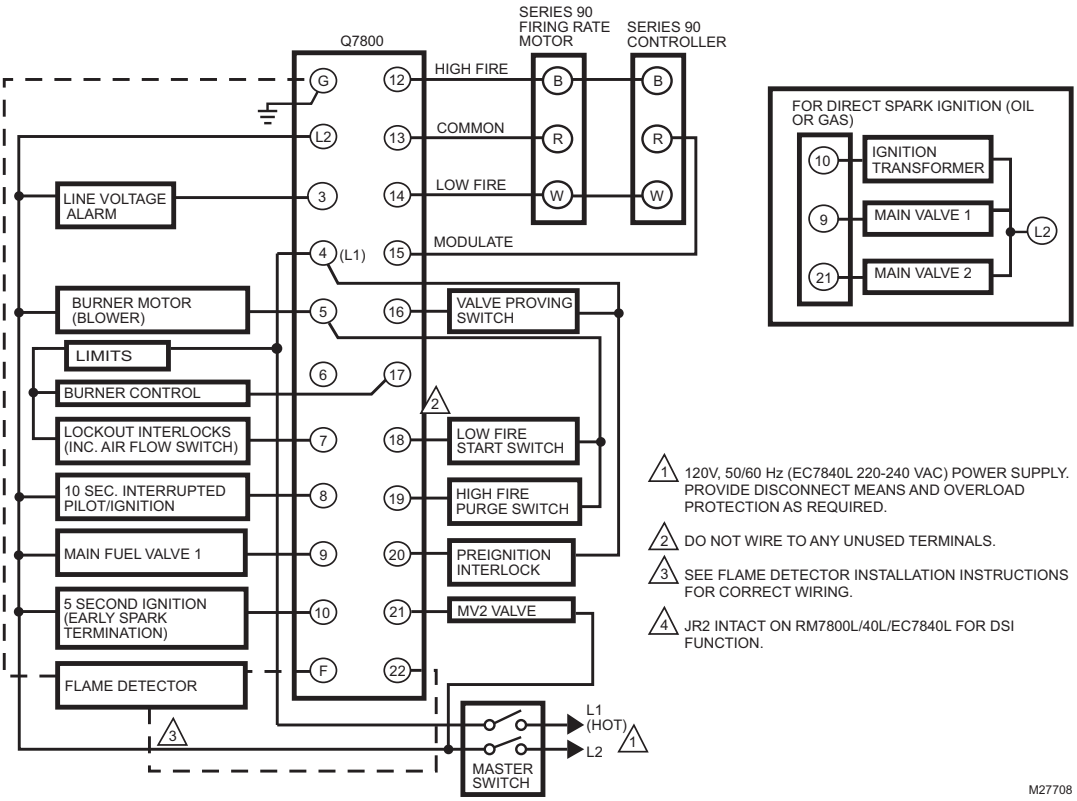

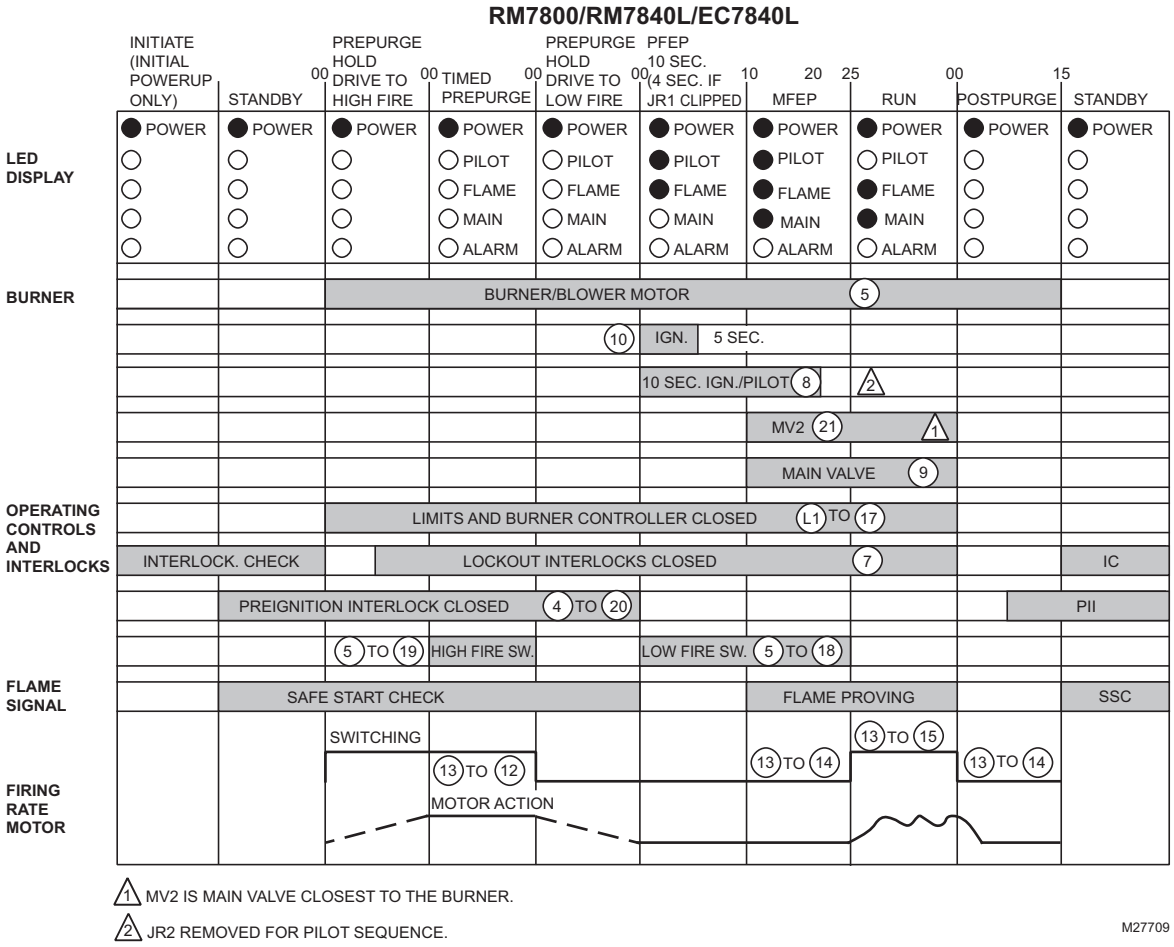

Fig. 4. Wiring subbase and sequence for RM7800L/40L, EC7840L with Valve Proving feature enabled.

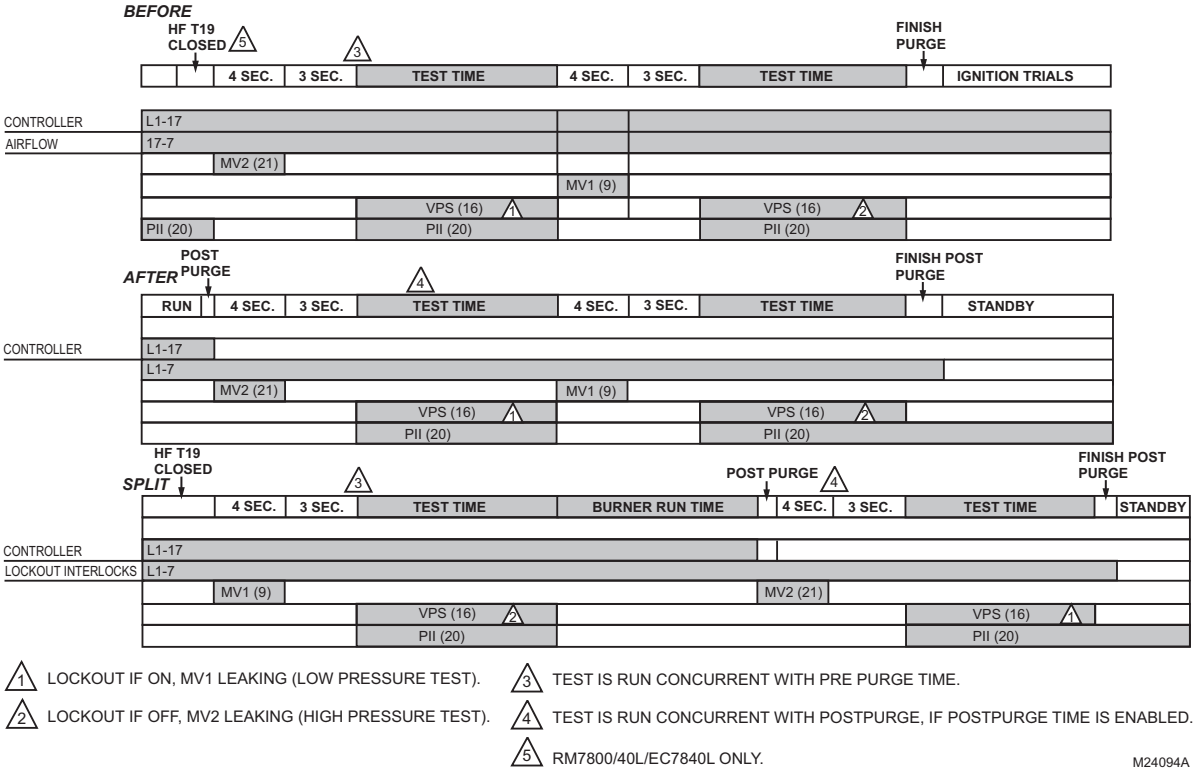

Fig. 5. RM7800L/40G,L and EC7840L Relay Module operation, Valve Proving test options.

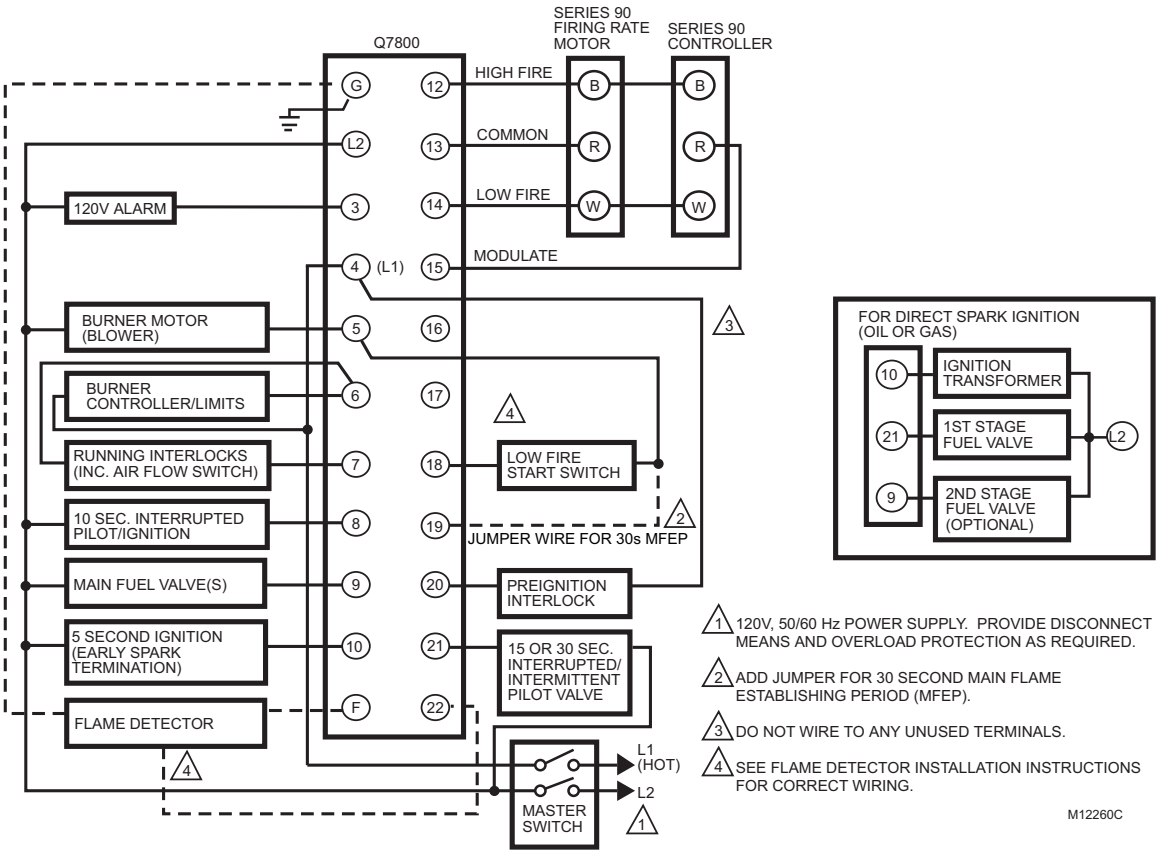

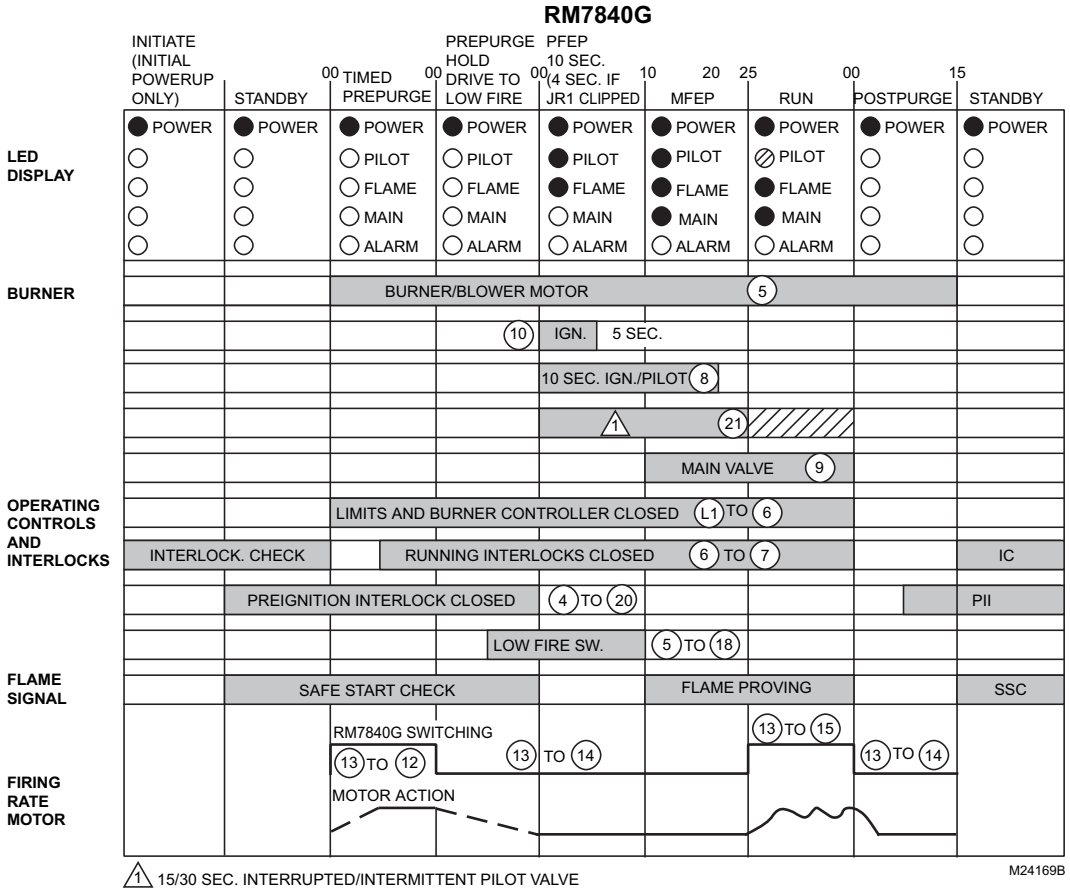

Fig. 6. Typical wiring subbase and sequence for RM7840G without Valve Proving enabled.

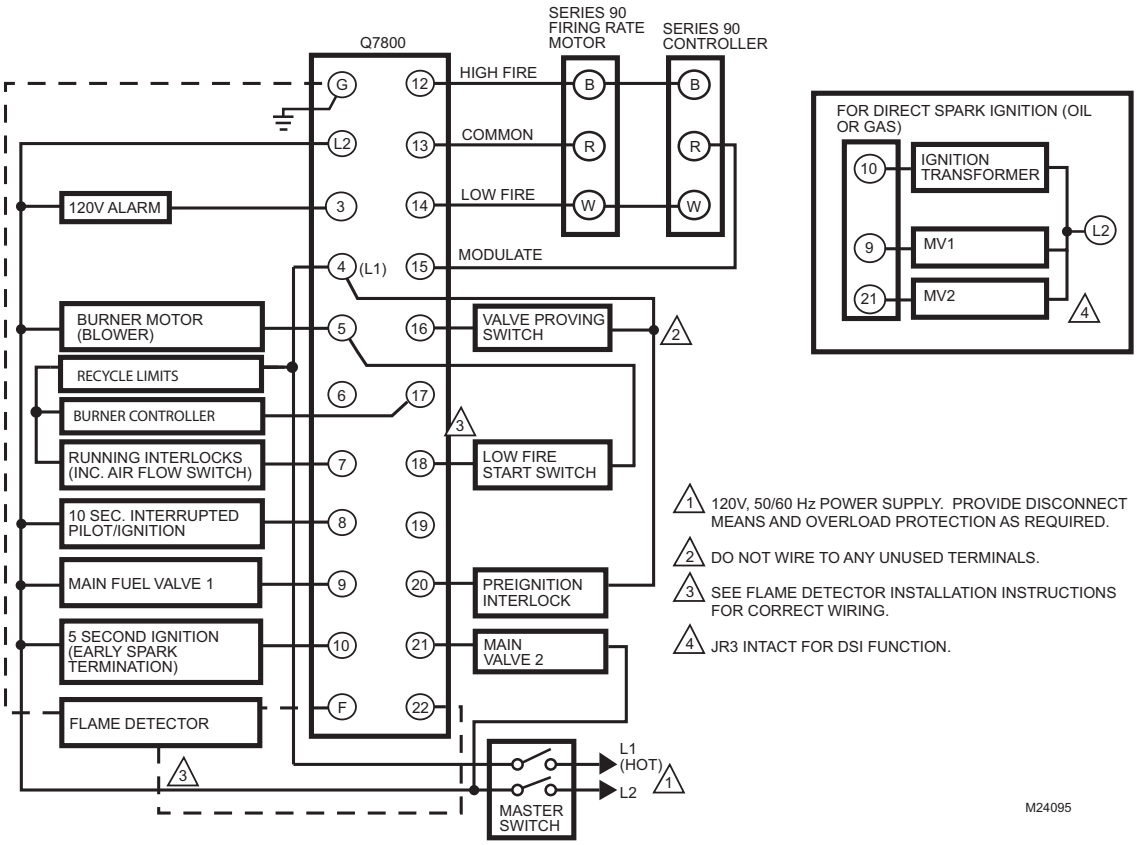

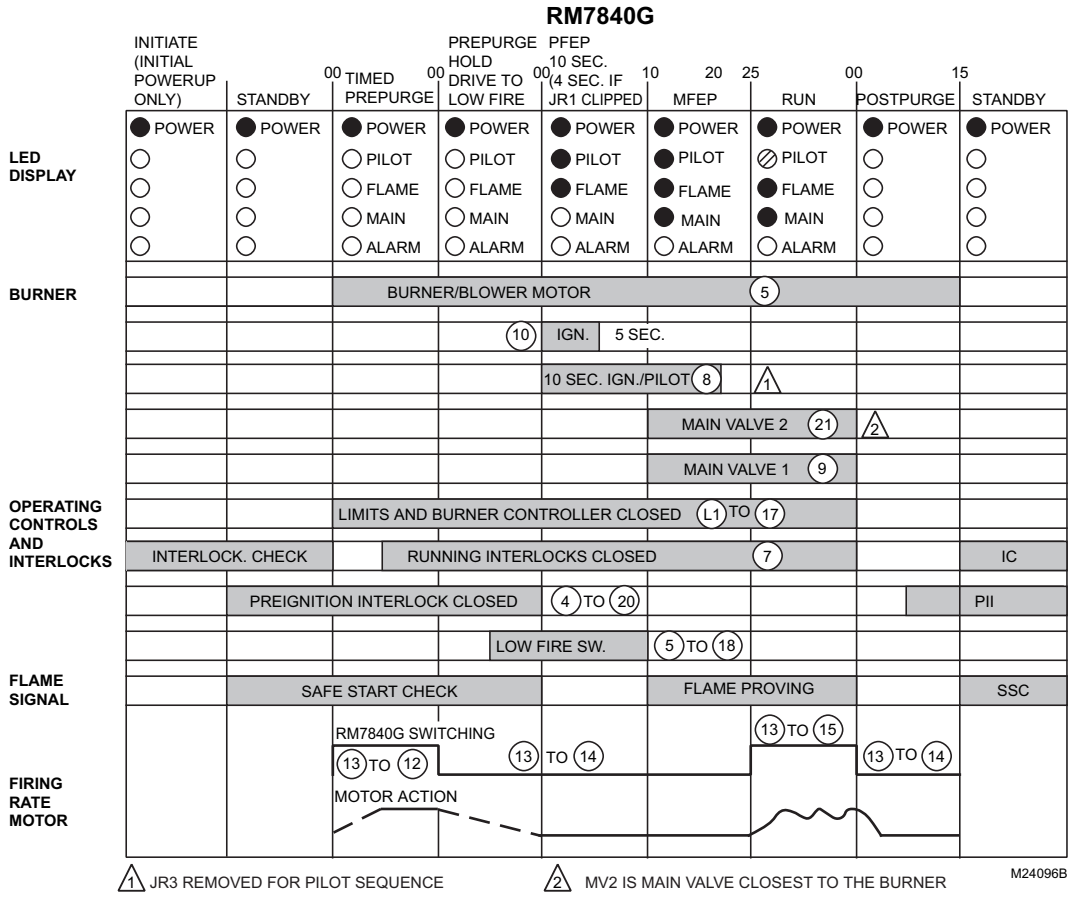

Fig. 7. Typical wiring subbase and sequence for RM7840G with Valve Proving enabled.

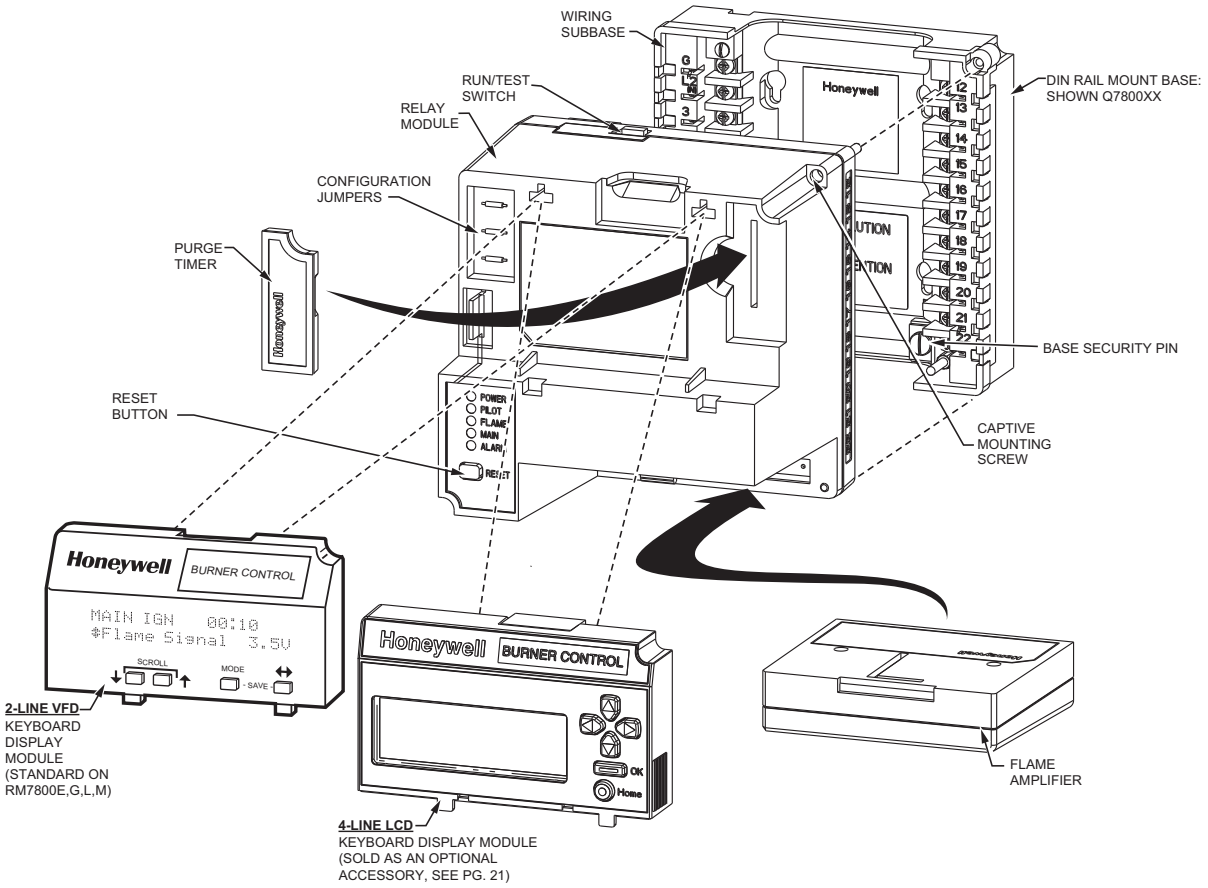

Fig. 8. RM7800L/40L, EC7840L Relay Module exploded view.

VALVE PROVING SYSTEM

The Valve Proving System feature provides a systematic way of testing the valve seat integrity to assure the valves are in the closed state whenever the sequence of operation requires them to be closed. It is designed to detect a leak greater than 0.1% of the burner input capacity. For example, a 10 million Btu/hr natural gas-fueled burner would have a fuel input capacity of approximately 1,000 ft^3/hr. A leak rate greater than 0.1% of 1,000 ft^3/hr or 1 ft^3/hr in either valve will be detected with the Valve Proving System. Smaller leaks will not be detected.

At commissioning time, the Valve Proving System may be scheduled to occur at one of five different times: Never, Before, After, Both, and Split.

Never—Device default as received: in this case Valve Proving does not occur.

Before—Valve Proving occurs concurrently with Pre-Purge.

After—Valve Proving occurs after the Run state before the internal Safety Relay dropout state and concurrent with Post Purge (if configured).

Both—Valve proving occurs at both times Before and After noted above.

Split—The downstream seat (high pressure) test is performed at the Before time and the upstream seat (low pressure) test is performed during the After time.

The Valve Proving items programmed are:

1. Specify when to perform Valve Proving. Demand input to terminal 17 actually enables the function of Valve Proving.
2. Specify the time duration of the test (calculated from Appendix A).

Typical Valve Proving System Function

Valve proving consists of monitoring the pressure in the space between two shutoff valves, MV1 (upstream) and MV2 (downstream). The valve proving function, identified by letters A through F, operates as follows:

The tolerance on all valve proving timing values is ±10%.

The following are steps performed during valve proving tests. This section is for background information and does not define the exact behavioral requirements.

A. MV2 is commanded to be open while MV1 remains closed; to depressurize the space. After 4 seconds, MV2 is commanded closed again.

B. This is followed by a three second delay during which the valve proving pressure switch (VPS) is ignored.

C. Thereafter, the VPS is monitored for the duration of the valve proving test time and, if it turns on, then a lockout occurs. (Because the gas pressure has increased due to a leaky upstream valve.) (Low pressure test.)

D. MV1 is commanded to be open while MV2 remains closed, to pressurize the space. After 4 seconds, MV1 is commanded closed again.

E. This is followed by a three second delay, during which the valve proving pressure switch (VPS) is ignored.

F. Thereafter, the VPS is monitored for the duration of the valve proving test time and, if it turns off, then a lockout occurs. (Because the gas pressure has decreased due to a leaky downstream valve.) (High pressure test.)

Pressure Switches for Valve Proving System

The Valve Proving System requires a pressure switch to be installed to monitor the pressure in the internal space between the two shutoff valves. Recommended pressure switches are the following Honeywell non-manual reset models:

Table 6. Honeywell Pressure Switch Selection for Valve Proving System.

1	2	3	4	5	6
Model Number	**Operating Pressure Range**	**Maximum Differential (Additive)**	**Maximum Continuous Rated Pressure (psi)**	**Switch Action at Setpoint**	**Mounting Type**
C6097A1004	0.4 to 5 in. wc	0.24 in. wc	2.9	Breaks N.O. to C connection on pressure fall.	1/4 in. NPT
C6097A1053	3 to 21 in. wc	0.48 in. wc	5.0		
C6097A1061					Flange
C6097A1079	12 to 60 in. wc	2.4 in. wc			1/4 in. NPT
C6097A1087					Flange
C6097A1129	1.5 to 7 psi	0.3 psi	9.3		1/4 in. NPT
C6097A1137					Flange
C6097A1210	0.4 to 4 in. wc	0.24 in. wc	2.9		

Pressure Switch Selection

1. Determine the maximum operating inlet pressure for the upstream valve; for example, 5.0 psi (140 in. wc).
2. Divide the inlet pressure by two (2.5 psi [70 in. wc], for example).
3. From column 2 in Table 6 find the operating range upper limit that is closest to but greater than the inlet pressure divided by two. In the example given, the possible selections from column 1 are the C6097A1129 and C6097A1137 with an operating range upper limit of 7 psi. (The C6097A1079 and C6097A1087 with an upper limit of 60 in. wc are close, but 60 in. wc is less than the 70 in. wc minimum, so the next higher range must be selected.)
4. From column 6, select the preferred mounting type, 1/4 in. NPT or Flange. For example, if a flange mount is required, the pressure switch choice from column 1 would be the C6097A1137.

Pressure Switch Installation and Adjustment

1. Refer to the instructions for the C6097A Pressure Switch, form number 65-0237.
2. Install the C6097A Pressure Switch according to the instructions.
3. Adjust the setpoint to 50% of the maximum operating inlet pressure for the upstream valve.
4. Complete the operation and checkout procedures in the instructions.

Setup (Programming) of Valve Proving Function

Prior to setup of the Valve Proving Function, follow the procedures in the appendix to complete the worksheet and obtain the Valve Proving Test Time.

An S7800A1142 or S7800A2142 Keyboard Display Module (KDM) is required for this setup.

System operation requires the Valve Proving function setup and demand input must be connected to terminal 17.

NOTE: The S7800A1142 and/or S7800A2142 Keyboard Display is NOT supplied on RM7840G,L or EC7840L device.

When the RM7800L/40G,L, EC7840L is installed and powered, “STANDBY” will be shown on the first line of the display.

1. Scroll down until the “Setup” is displayed in the second line. (Setup is only available when the control is in Standby or Lockout state.)

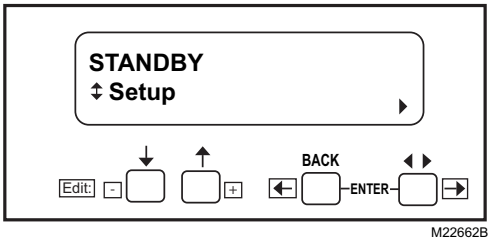

Fig. 9. STANDBY/Setup screen.

2. Enter the Setup submenu by pressing the far right key on the display. Note that the second line now reads “BC Password”.

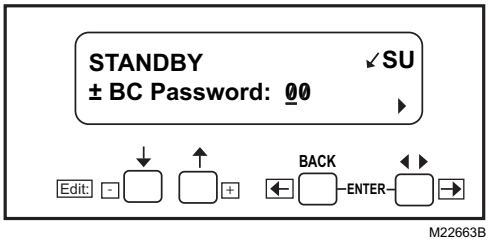

Fig. 10. Password screen.

3. Use the +/- buttons to enter the first number—7.
4. Use the far right key to shift over one space.
5. Use the +/- buttons to enter the second number—8.
6. Press Enter (left/right arrow simultaneously).

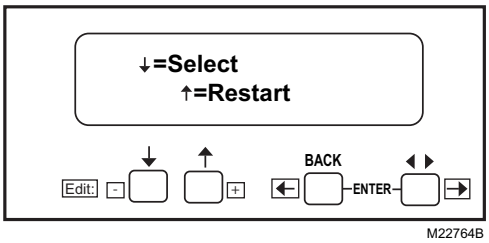

Fig. 11. Select/Restart screen.

7. To get to the next screen, press the down arrow. “Getting Data” will be displayed, then the following screen.

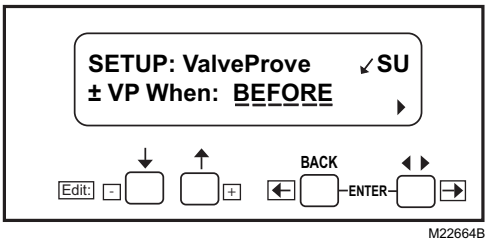

Fig. 12. SETUP: Valve Prove screen.

NOTE: This screen sets up when to do the Valve Proving Test.

8. Use the up/down arrows to select from Never, Before, After, Both, or Split, then press ENTER.

NOTE: Use Never (as shipped) on initial startup so gas line purging and System Checkout can be performed. Then come back to set final operation configuration. Be sure to conduct final VPS System checkout when Setup is complete.

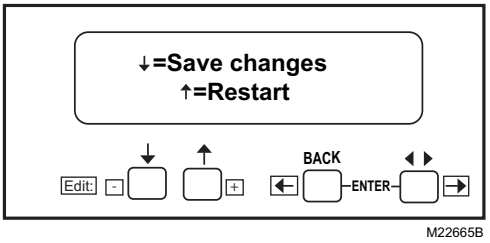

Fig. 13. Save Changes screen.

9. Use the down arrow to save changes. After pressing the down arrow, “Getting Data” is displayed.

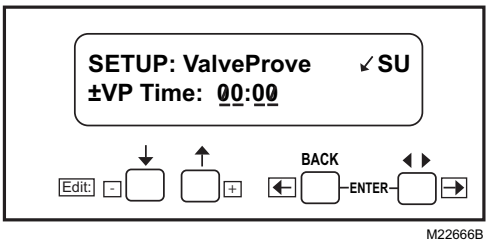

Fig. 14. Valve Prove time screen.

This screen sets up how long the RM7800L/40G,L, EC7840L will conduct the Valve Proving Test for a given time. VP TIme: 00:00 is shown.

10. Enter the appropriate Valve Proving test time from the worksheet in the appendix.

Use the (+) button to increase time and the (-) button to decrease. Time changes:

a. 0 to 60 seconds in 1-second intervals.
b. 60 to 600 seconds in 10-second intervals.
c. 10 to 60 minutes in 1-minute intervals.

Press ENTER when correct time is displayed.

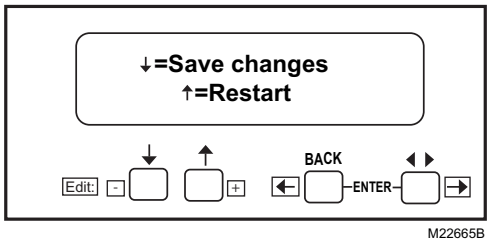

Fig. 15. Save Changes screen.

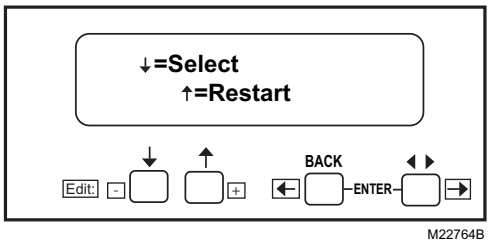

Fig. 16. Select/Restart screen.

11. Press down arrow to select.
12. "Getting Data" will be momentarily displayed, followed by the screen shown in Fig. 12.

Changing the Installed Postpurge

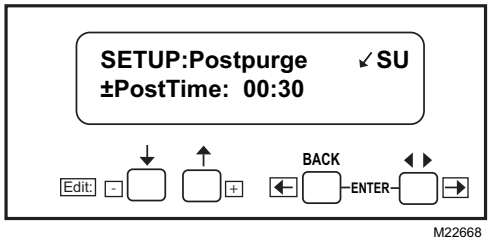

Fig. 17. Setting Postpurge time.

This screen allows for setting up the Postpurge for the RM7800L/40G,L, EC7840L. This will be the time that the Combustion Fan (terminal 5) will remain energized after the demand ends.

NOTE: The device comes standard with 15-second Postpurge.

13. Use the +/- buttons to adjust the postpurge time.
Time changes:

0 to 60 seconds in 1-second intervals.

60 to 600 seconds in 10-second intervals.

10 to 60 minutes in 1-minute intervals.

14. Press Enter (Left/Right arrow keys simultaneously) when the correct postpurge time is displayed.

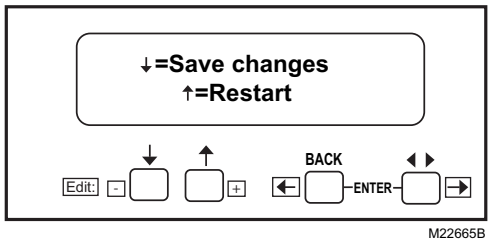

Fig. 18. Save Changes screen.

15. Use the down arrow to save changes. "Getting Data" is displayed momentarily.
The following steps are to confirm your selections.

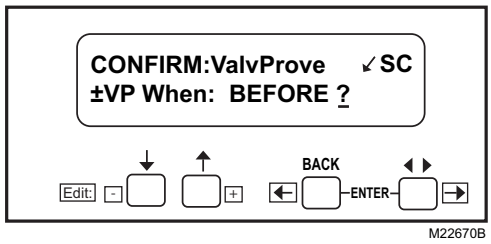

Fig. 19. Confirmation Acknowledgement screen. (The Valve Proving Test location is shown.)

16. Press ENTER.

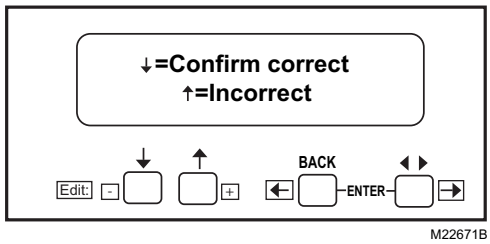

Fig. 20. Confirmation Correct screen.

17. Use the down arrow to confirm correct.

NOTE: Using the up arrow during this step will take you back to the beginning of the setup routine.

"Getting Data" will be displayed.

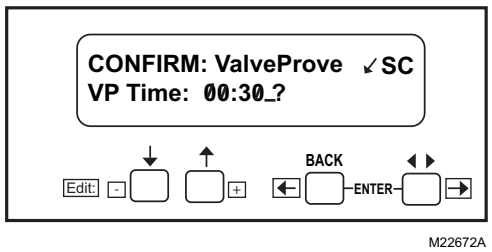

Fig. 21. Confirm screen.

18. Press Enter.

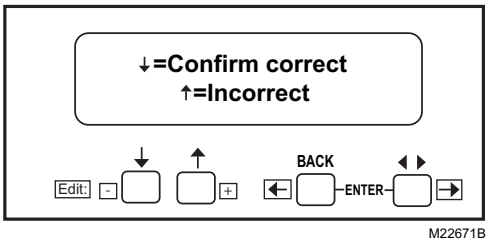

Fig. 22. Confirm Correct screen.

19. Use the down arrow to confirm correct. "Getting Data" will be displayed.

The following steps are used to confirm your selection.

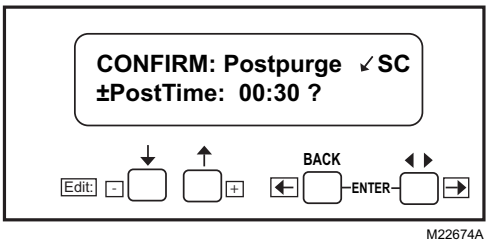

Fig. 23. Confirm Postpurge time.

20. Press Enter.

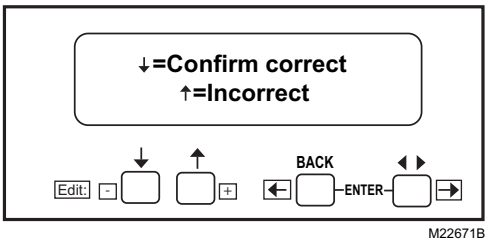

Fig. 24. Confirm correct/incorrect screen.

21. Press Enter.
22. Press the down arrow to confirm the correct post-purge time. "Getting Data" will be displayed until the screen in Fig. 20 appears.

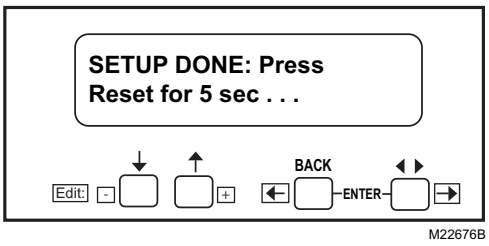

Fig. 25. Setup Done screen.

23. Press and hold the relay module RESET button for five seconds to program the Valve Proving setup into the relay module.

The Release Reset screen will appear on the KDM.

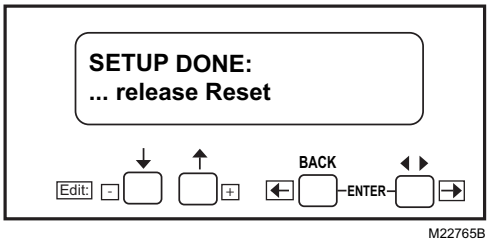

Fig. 26. Release Reset screen.

Once the system is in operation, the settings of the Valve Proving and Postpurge can be viewed in Diagnostics, using your S7800 Keyboard Display Module (KDM).

Future changes to the Valve Proving and Postpurge features are still possible. With the relay module in standby, scroll to the Setup line and enter the password to change the settings.

SAFETY SHUTDOWN

Safety Shutdown (Lockout) occurs if any of the following occur during the indicated period:

1. **Anytime:**
   a. Purge card is not installed or removed.
   b. Purge card is bad.
   c. Configuration jumpers are changed (after 200 hours of operation).
   d. Internal system fault.
   e. Demand present at terminals 6 and 17 at the same time.
   f. Failure of the Valve Proving test.
   g. Demand at terminal 17 and device at default "Never."
2. **INITIATE Period:**
   a. AC line power errors occurred, see Operation section.
   b. Four minute INITIATE period has been exceeded.
3. **STANDBY Period:**
   a. Flame signal is present after 240 seconds.
   b. Pre-Ignition Interlock is open an accumulative time
   of 30 seconds.
   c. Interlock check feature is enabled (L only with JR3 clipped) and the Interlock String (including airflow switch) is closed for 120 seconds with controller closed.
   d. Ignition/pilot valve/intermittent pilot valve terminal is energized.
   e. Main valve terminal(s) energized.
   f. Internal system fault occurred.

4. **PREPURGE Period:**
   a. Pre-Ignition Interlock opens anytime during PREPURGE period (except during VP test). (L model only)
   b. Flame signal is detected after first ten seconds during PREPURGE (RM7800L/40L, EC7840L).
   c. High Fire Switch fails to close within four minutes and fifteen seconds after the firing rate motor is commanded to drive to the high fire position at the start of PREPURGE (RM7800L/40L, EC7840L).
   d. Low Fire Switch fails to close within four minutes and fifteen seconds after the firing rate motor is commanded to drive to the low fire position at the end of PREPURGE.
   e. Running Interlock does not close within 30 seconds (RM7840G).
   f. Lockout Interlock does not close within 10 seconds (RM7800L/40L, EC7840L).
   g. Lockout Interlock opens during PREPURGE (RM7800L/40L, EC7840L).
   h. Ignition/pilot valve/intermittent pilot valve terminal is energized.
   i. Main valve terminal is energized (except during Valve Proving testing).
   j. Internal system fault occurred.
5. **PILOT FLAME ESTABLISHING Period (PFEP):**
   a. Low Fire Switch opens.
   b. Lockout Interlock opens (RM7800L/40L, EC7840L).
   c. Ignition/pilot valve/intermittent pilot valve terminal is not energized.
   d. Early spark termination terminal is energized after five seconds.
   e. No flame is present at the end of PFEP.
   f. Main valve terminal is energized (RM7840G).
6. **MAIN FLAME ESTABLISHING Period (MFEP):**
   a. Low Fire Switch opens.
   b. Lockout Interlock opens (RM7800L/40L, EC7840L).
   c. Ignition/pilot valve/intermittent pilot valve terminal is not energized.
   d. Main valve terminal is not energized.
   e. No flame is present at the end of MFEP.
7. **RUN Period:**
   a. No flame is present.
   b. Lockout Interlock opens (RM7800L/40L, EC7840L).
   c. Interrupted pilot valve terminal is energized.
   d. Main valve terminal is not energized.
8. **POSTPURGE Period:**
   a. Pre-Ignition Interlock does not close in five seconds OR opens after five-seconds during POSTPURGE period (except during VP testing).
   b. Ignition/pilot valve/intermittent pilot valve terminal is energized.
   c. Main valve terminal is energized (except during VP testing).

OPERATION

Sequence of Operation

The RM7800L/40G,L, EC7840L has the following operating sequences, see Fig. 4, 5, 7, and 8. The RM7800L/40L, EC7840L LED provide positive visual indication of the program sequence: POWER, PILOT, FLAME, MAIN and ALARM.

Initiate

The RM7800L/40G,L, EC7840L enters the INITIATE sequence when the Relay Module is powered. The RM7800L/40G,L, EC7840L can also enter the INITIATE sequence if the Relay Module verifies voltage fluctuations of +10/-15 percent or frequency fluctuations of +/-10 percent during any part of the operating sequence. The INITIATE sequence lasts for ten seconds unless the voltage or frequency tolerances are not met. When the tolerances are not met, a hold condition is initiated and displayed for at least five seconds. When the tolerances are met, the INITIATE sequence restarts. If the condition is not corrected and the hold condition exists for four minutes, the RM7800L/40G,L, EC7840L locks out. Causes for hold conditions in the INITIATE sequence:

a. AC line dropout is detected.
b. AC line noise prevents a sufficient reading of the line voltage inputs.
c. Low line voltage brownouts occur.

The INITIATE sequence also delays the burner motor starter from being energized and de-energized from an intermittent AC line input or control input.

Standby

The RM7800L/40G,L, EC7840L is ready to start an operating sequence when the operating control determines a call for heat is present. (Terminal 6, or Terminal 17 if Valve Proving is required.) The burner switch, limits, operating control and all microcomputer monitored circuits must be in the correct state for the RM7800L/40G,L, EC7840L to continue into the PREPURGE sequence.

Prepurge

The ST7800 purge timers provide 15 Pre-Purge timings selectable from 2 seconds to 30 minutes:

a. The operating control (terminal 6, or terminal 17 for valve proving), Running Interlocks, Pre-Ignition Interlocks, Burner Switch, Run/Test Switch, Lockout Interlocks and all microcomputer monitored circuits must be in the correct operating state.
b. The blower motor output, terminal 5, is powered to start the PREPURGE sequence. The firing rate motor is driven to the high fire position (RM7800L/40L, EC7840L). The PREPURGE timing does not begin until the Lockout Interlock String and High Fire Switch are both closed.

c. If Before, Split or Both Valve Proving tests are selected (and demand input T17 is used), the RM7800L/40G,L, EC7840L will sequence the main valves to conduct the VP tests concurrently with Pre-Purge (beginning at 10 seconds into the purge time).
d. The Pre-Ignition Interlock input must remain closed throughout PREPURGE (except during VP testing); otherwise, control returns to the STANDBY state and holds (30 seconds) for the RM7840G or safety shutdown occurs for the RM7800L/40L, EC7840L.
e. The Lockout Interlock or Running Interlock inputs (interlock circuit including Airflow Switch) must close by ten seconds after demand; otherwise, a recycle to the beginning of PREPURGE for the RM7840G will happen or a safety shutdown for the RM7800L/40L, EC7840L occurs.
f. When PREPURGE timing is complete, the firing rate motor drives to the low fire position, RM7800L/40G,L, EC7840L.
g. When the firing rate motor reaches low fire position, the Low Fire Switch, terminal 18, input must be energized before entering the Ignition Trial state.

Ignition Trials—Pilot Lighted System (Non VP Operation System) (demand into terminal 6)

1. **Pilot Flame Establishing Period (PFEP):**
   a. With the firing rate motor at the low fire position (Low Fire Start Switch-terminal 18 enabled):
   b. Terminals 8, 10 and 21, are energized.

   NOTE: Low Fire Start Switch-terminal 18 enabled must remain closed until the RM7800L/40G,L, EC7840L releases to modulation - or a safety shutdown will occur.

   The Pre-Ignition Interlock input is ignored throughout the Ignition Trial state.

   c. After five seconds, the ignition, terminal 10, is de-energized for early spark termination.
   d. Flame must be proven by the end of the ten-second PFEP (four-seconds if JR1 is clipped). If flame is not proven by the end of the PFEP, a safety shutdown occurs.
2. **Main Flame Establishing Period (MFEP):**
   a. Terminal 9 is energized when the presence of flame is verified at the end of a 10-second Pilot Flame Establishing Period (PFEP).
   b. Terminal 8 is turned off 10 seconds after Terminal 9 is energized.
   c. Terminal 21 action:
      (1) RM7800/40L, EC7840L - turned off15-seconds after Terminal 9 is energized.
      (2) The RM7840G:
         (a) Not turned off, (intermittent pilot).
         (b)Turns off 15-seconds after Terminal 9 is energized (if configuration jumper 2 removed).
         (c)Turns off 30-seconds after Terminal 9 is energized (if configuration jumper 2 removed and terminal 5 is jumpered to terminal 19).
   d. The RM78XX releases to modulation (RUN) 15-seconds (30 seconds for RM7840G with terminal 5 to 19 jumpered) after terminal 9 is energized if flame is present.

Valve Proving Ignition Trials (demand on terminal 17) -Pilot Lighted System (Not VP DSI). (Configuration jumper 2 on RM7800L/40L, EC7840L or Jumper 3 on RM7840G MUST be removed).

1. **Pilot Flame Establishing Period (PFEP):**
   a. With the firing rate motor at the low fire position (Low Fire Start Switch-terminal 18 enabled):
   b. Terminals 8, 10, are energized.

   NOTE: Low Fire Start Switch-terminal 18 enabled must remain closed until the RM7800L/40G, L, EC7840L releases to modulation - or a safety shutdown will occur.

   The Pre-Ignition Interlock input is ignored throughout the Ignition Trial state.

   c. After five seconds, the ignition, terminal 10, is de-energized for early spark termination.
   d. Flame must be proven by the end of the ten-second PFEP (four-seconds if JR1 is clipped). If flame is not proven by the end of the PFEP, a safety shutdown occurs.
2. **Main Flame Establishing Period (MFEP):**
   a. Terminal 9 and 21 are energized when the presence of flame is verified at the end of a 10- second Pilot Flame Establishing Period (PFEP) (four seconds if JR1 is clipped).
   b. Terminal 8 is turned off 10 seconds after Terminal 9 and 21 are energized.
   c. The RM7800L/40G, L, EC7840L releases to modulation (RUN) 15-seconds terminal 9 and 21 are energized if flame is present.

Ignition Trials—Valve Proving with DSI System

1. **Demand connected to Terminal 17:**
   - JR2 Intact on RM7800L/40L, EC7840L
   - JR3 Intact on RM7840G
   a. Ignition, Main Valve 1 and Main Valve 2, Terminals 10, 9, and 21 turn on together.
   b. Flame must be proven at the end of the 4 second Main Flame Establishing Time.
   c. Ignition, Terminal 10 is turned off. System now in Run.
   d. If Flame is not proven, safety lockout occurs.

Run

1. A ten-second stabilization period occurs at the beginning of the RUN period.
2. The firing rate motor releases to modulation.
3. The RM7800L/40G,L, EC7840L is now in RUN and remains in RUN until the controller input, terminal 6, opens (terminal 17, on VP applications), indicating that the demand is satisfied or a limit opened.

Postpurge

The RM7800L/40G,L, EC7840L provides a programmable (default is 15 seconds) POSTPURGE following the completion of the RUN period. The blower motor output is powered to drive all products of combustion and any unburned fuel from the combustion chamber. It also supplies combustion air to burn fuel being purged from the fuel line downstream of the fuel shutoff valve.

1. The main fuel valve and intermittent pilot valve, Terminals 9 and 21, are de-energized and the firing rate motor is commanded to the low fire position to begin the POSTPURGE period.
2. The Pre-Ignition Interlock closes within the first five seconds after the demand opens.
3. If Valve Proving option—After, Split or Both have been selected, then the Valve Proving test will be conducted concurrent with Postpurge. If Postpurge timing remains after the Valve Proving test is completed, the Postpurge timing will complete before the RM7800/40G,L, EC7840L go into standby.

Table 7. Sequence Timing for Normal Operation.

Device	Initiate	Standby	Purge	Flame Establishing Period		Run	Post-Purge Timing[d]	Interlock Circuits	Firing Rate Circuit	Approval Code Bodies
				Pilot	Main[a, c]					
RM7840G	10 sec.	*	**	4 or 10 sec.	10, 15 sec. or intermittent[b]	*	15 sec.	Pre-Ignition, Running, Low Fire	4-wire modulating	UL/CSA Modulating
RM7800L/RM7840L/EC7840L					10 or 15 sec.[b]			Pre-Ignition, Lockout, High and Low Fire		FM/IRI Modulating

* STANDBY and RUN can be an infinite time period.
**PURGE determined by which ST7800A purge card is selected.

[a] The MFEP is determined by which terminal is used, configuration jumper selected or jumper wire added. See Fig. 2, 3, 4, 6, and 7.

[b] If DSI is Enabled on a VP application (JR2 intact on RM7800L/40L, EC7840L or JR3 intact on RM7800/40G) then Ignition (terminal 10) and MV_1 (terminal 9), and MV_2 (terminal 21) are energized together. After 4 seconds terminal 10 shuts off, and system goes to Run.

[c] If DSI is disabled on a VP application then MFEP is 10 seconds.

[d] Default is 15 seconds. Can be programmed as long as 66 minutes.

Keyboard Display Module Options

Vacuum Fluorescent Display (VFD)

The Keyboard Display Module (see Fig. 5) is provided with the RM7800 Relay Module (but is not required for operation) and is an option for the RM7840 Relay Module. The first line of the Vacuum Fluorescent Display (VFD) provides:

- Current status of the burner sequence (STANDBY, PURGE, PILOT IGN, MAIN IGN, RUN and POSTPURGE).
- Timing information (PURGE, PILOT IGN, MAIN IGN and POSTPURGE) in minutes and seconds.
- Hold information (PURGE HOLD: T19).
- Lockout information (Lockout, Fault Code, Message and Sequence).

The extreme right side of the first line is either blank or shows a small arrow pointing to the second line followed by a
two-letter code (DI-Diagnostic Information, Hn-Fault History Information, and EA-Expanded Annunciator). When the arrow and two-letter code are displayed, it indicates the second line is showing a selectable message submenu. The second line displays selectable or preemptive messages.

A selectable message supplies information for flame strength, system status indication, system or self-diagnostics and troubleshooting.

A preemptive message has parentheses around the message and supplies a detailed message to support the sequence status information. A preemptive message can also be a lockout message. A preemptive message replaces a selectable message to support the sequence status information. It also replaces a selectable message after 60 seconds if it or a lockout message is available.

4-Line LCD Display

The 4-line LCD Keyboard Display Module (See Fig. 5) S7800A2142/U is available as an option for the RM7800 and RM7840 Relay Modules. This display must be purchased separately. This display offers more lines of text displaying the full trouble-shooting guide. (It is important to note that this display's lower end temperature rating is 0 °F).

The first line of the Home and Lockout pages on the LCD display use a larger font size than all other pages so that information on them can be more easily viewed from distances farther away from the display module (refer to document number **32-00110** for full details on operation).

Up to 4 lines of text are displayed at a time on the page. When the page has more than 4 lines of text to display a scroll bar is present on the right-hand side of the page to indicate this situation. The “Up arrow” and “Down arrow” buttons are used to scroll up and down the lines of the page. Each line is highlighted with a white background to indicate that it currently has input focus for any button actions. The scroll bar adjusts to give a relative position of the current view with respect to all lines that the page can display.

When a line has a right arrow symbol positioned on the right hand side it indicates that this line can navigate to another page, “Next page”, related to the subject of the line when that line has input focus. A “Right arrow” or “OK” button can be pressed when the focus is on this line to navigate to the next page.

Run/Test Switch

WARNING

Explosion Hazard.
Can cause serious injury or death.
Do not use the Run/Test switch during the Pilot Flame Establishing Period for the RM7800L/40G, EC7840L when using Direct Spark Function, because it turns on the main gas valve, causing an accumulation of fuel in the burner.

The Run/Test Switch is located on the top side of the RM7800L/40G,L, EC7840L, see Fig. 29. The Run/Test Switch allows the burner sequence to be altered as follows:

1. In Pre-Purge Drive To High Fire Position (RM7800L/40L, EC7840L), the Run/Test Switch, when placed in the TEST position, holds in PRE-PURGE with the firing rate motor in the High Fire position.
2. In the measured PREPURGE sequence, the Run/Test Switch, when placed in the TEST position, causes the PREPURGE timing to stop. The firing rate motor is in the High Fire (RM7800L/40L, EC7840L) position (Run/Test Switch is ignored while the Valve Proving test is being conducted by the RM7800L/40L, EC7840L).
3. In Pre-Purge Drive to Low Fire position, the Run/Test Switch, when placed in the TEST position, holds the burner sequence in PREPURGE with the firing rate motor in the Low Fire position.
4. In PFEP, the Run/Test Switch, when placed in the TEST position, stops the timer during the first eight seconds when a ten second PFEP is selected or during the first three seconds when a four second PFEP is selected, allowing pilot-turn-down test and other burner adjustments to be made. This activates a fifteen second flameout timer that permits pilot flame adjustment without nuisance safety shutdowns. The Run/Test Switch is ignored during PFEP for the RM7800L/40G,L, EC7840L if Terminals 8 and 9 or 9 and 21 are jumpered.
5. During Run, the Run/Test Switch, when placed in the TEST position, drives the firing rate motor to the Low Fire position.

NOTE: When RM7800L/40G,L, EC7840L is switched to the Test mode, it stops and holds at the next Run/Test Switch point in the operating sequence. Make sure that the Run/Test Switch is in the RUN position before leaving the installation.

SETTINGS AND ADJUSTMENTS

Selectable Site-Configurable Jumpers

The RM7800L/40G,L, EC7840L has three site-configurable jumper options, see Fig. 29 and Table 8. If necessary, clip the site-configurable jumpers with side cutters and remove the resistors from the Relay Module.

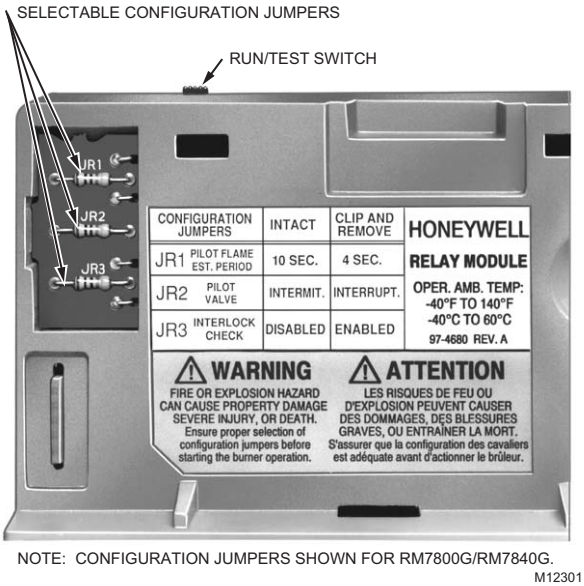

NOTE: CONFIGURATION JUMPERS SHOWN FOR RM7800G/RM7840G.

M12301

Fig. 27. Selectable site-configurable jumpers.

Table 8. Site Configurable Jumper Options.

Jumper Number	Description	Intact	Clipped	RM7800L/40L, EC7840L Type
JR1	Pilot Flame Establishing Period [c]	10 seconds	4 seconds	G, L
JR2	DSI with Valve Proving [c]	Enabled	Disabled	L
JR2	Pilot Valve[a]/Main Flame Establishing Period (MFEP)	Intermittent	Interrupted	G[b]
JR3	Start-Up Interlock Check	Disabled	Enabled	L
JR3	DSI with Valve Proving [c]	Enabled	Disabled	G

[a] Pilot Valve /First Stage Oil Valve Terminal 21 cannot be used in this arrangement if Valve Proving feature is selected.

[b] A 30-second MFEP can be accomplished by adding a jumper wire between terminals 19 and 5, ignored if VP is active.

[c] DSI Enabled allows for Valve Proving test to be performed, then during PFEP both terminals 9 and 21 energize to light the Main Flame—note PFEP will not occur and the MFEP will automatically be 4 seconds regardless.

STATIC CHECKOUT

After checking all wiring, perform this checkout before installing the RM7800L/40G,L, EC7840L on the subbase. These tests verify the Q7800 Wiring Subbase is wired correctly, and the external controllers, limits, interlocks, actuators, valves, transformers, motors and other devices are operating properly.

WARNING

Explosion and Electrical Shock Hazard.
Can cause serious injury, death or equipment damage.

1. Close all manual fuel shutoff valve(s) before starting these tests.
2. Use extreme care while testing the system. Line voltage is present on most terminal connections when power is on.
3. Open the master switch before installing or removing a jumper on the subbase.
4. Before continuing to the next test, be sure to remove test jumper(s) used in the previous test.
5. Replace all limits and interlocks that are not operating properly. Do not bypass limits and interlocks.

CAUTION

Equipment Damage Hazard.
Improper testing can damage equipment.
Internal surge protectors can break down and conduct a current, causing the RM7800L/40G,L, EC7840L to fail the dielectric test or possibly destroy the internal lightning and high current protection. Do not perform a dielectric test with the RM7800L/40G,L, EC7840L installed.

Equipment Recommended

1. Voltmeter (1M ohm/volt minimum sensitivity) set on the 0-300 Vac scale.
2. Two jumper wires; no. 14 wire, insulated, 12 inches (304.8 mm) long with insulated alligator clips at both ends.
3. Ammeter can be used to verify valve loads connected to the wiring subbase.

General Instructions

1. Perform all applicable tests listed in Static Checkout, Table 8, in the order listed.
2. Make sure all manual fuel shutoff valve(s) are closed.
3. Perform only those tests designated for the specific RM7800L/40G,L, EC7840L model being tested.
4. Raise the setpoint of the operating controller to simulate a call for heat.
5. For each test, open the master switch and install the jumper wire(s) between the subbase wiring terminals listed in the Test Jumpers column.
6. Close the master switch before observing operation.
7. Read the voltage between the subbase wiring terminals listed in the Voltmeter column.
8. If there is no voltage or the operation is abnormal, check the circuits and external devices as described in the last column.
9. Check all wiring for correct connections, tight terminal screws, correct wire, and proper wiring techniques. Replace all damaged or incorrectly sized wires.
10. Replace faulty controllers, limits, interlocks, actuators, valves, transformers, motors and other devices as required.
11. Make sure normal operation is obtained for each required test before continuing the checkout.
12. After completing each test, be sure to remove the test jumper(s).

WARNING

Explosion Hazard.
Can cause serious injury or death.
Make sure all manual fuel shutoff valves are closed before performing static checkout.

Table 9. Static Checkout.

Test No.	RM7800/RM7840/EC7840 Models	Test Jumpers	Voltmeter	Normal Operation	If Operation is Abnormal, Check the Items Listed Below
1	All	None	4-L2	Line voltage at Terminal 4.	1. Master Switch. 2. Power connected to the Master Switch. 3. Overload protection (fuse, circuit breaker, etc.) has not opened the power line.
2	All		6-L2 17-L2	Line voltage at Terminal 6. For VP applications. (Terminal 17)	1. Limits. 2. Burner Controller.
3	All		16-L2	Line voltage at 16	Valve Proving switch.
4	All		20-L2	Line voltage at Terminal 20.	1. Pre-Ignition interlocks.

Table 9. Static Checkout. (Continued)

Test No.	RM7800/RM 7840/EC7840 Models	Test Jumpers	Voltmeter	Normal Operation	If Operation is Abnormal, Check the Items Listed Below
5	All	4-5	7-L2	1. Burner motor (fan or blower) starts. 2. Line voltage at Terminal 7 within 10 seconds.	1. Burner motor circuit. a. Manual switch of burner motor. b. Burner motor power supply, overload protection, and starter. c. Burner motor. 2. Running or Lockout Interlocks (including Airflow Switch).
6	All	4-10 *	—	Ignition spark (if ignition transformer is connected to Terminal 10)	1. Watch for spark or listen for buzz. a. Ignition electrodes are clean. b. Ignition transformer is okay.
7	All	4-8 *	—	1. Ignition spark (if ignition transformer is connected to Terminal 8). 2. Automatic pilot valve opens (if connected to Terminal 8). NOTE: Refer to wiring diagram of system being tested.	1. Watch for spark or listen for buzz. a. Ignition electrodes are clean. b. Ignition transformer is okay. 2. Listen for click or feel head of valve for activation. a. Actuator if used. b. Pilot valve.
8	All	4-21 *	—	Same as test no. 6 for connections to Terminal 8. If using direct spark ignition, check the first stage fuel valve(s) instead of the pilot valve or MV2 for VP tests.	Same as test no. 6. If using direct spark ignition, check the first stage fuel valve(s) instead of the pilot valve.
9	All	4-9 *	—	Automatic main fuel valve(s) open. If using direct spark ignition on a model with intermittent pilot on Terminal 21, check the optional second stage fuel valve, if used.	1. Listen for and observe operation of the main fuel valve(s) and actuator(s). 2. Valve(s) and actuator(s).
10	All	4-3	—	Alarm (if used) turns on.	1. Alarm.
11	All	4-5 and 12-13	18-L2	Firing rate motor drives open; zero volts at Terminal 18 after motor starts driving open.	1. Low Fire Start Switch. 2. Firing rate motor and transformer.
12	All	4-5 and 14-13	18-L2	Firing rate motor drives closed; line voltage at Terminal 18 after motor is in Low Fire position.	1. Low Fire Start Switch. 2. Firing rate motor and transformer.
13	RM7800L; RM7840L; EC7840L	4-5 and 12-13	19-L2	Firing rate motor drives open; line voltage at Terminal 19 after motor is in High Fire position.	1. High Fire Purge Switch. 2. Firing rate motor and transformer.
14	RM7800L; RM7840L; EC7840L	4-5 and 14-13	19-L2	Firing rate motor drives closed; zero volts at Terminal 19 after motor starts driving closed.	1. Low Fire Start Switch. 2. Firing rate motor and transformer.
15	All	15-13	—	1. Raise setpoint of Series 90 controller—firing rate motor should drive toward open. 2. Lower setpoint of Series 90 controller—firing rate motor should drive toward closed.	1. Series 90 Controller. 2. Firing rate motor and transformer.
Final	All	**CAUTION** **Equipment Damage Hazard.** **Improper wiring can damage equipment.** On completing these tests, open the master switch and remove all test jumpers from the subbase terminal. Also remove bypass jumpers from the low fuel pressure limits (if used) to prevent equipment damage.			

* An ammeter can be used to verify the proper connected loads.

TROUBLESHOOTING

Troubleshooting can be accomplished by using the S7800 Keyboard Display Module (KDM) or a blinking POWER LED.

The POWER LED provides fault identification when the relay module locks out on an alarm. Fault identification is a series of fast and slow blinking LED lights. The fast blinks identify the tens portion of the fault code (three fast blinks is 30), while the slow blinks identify the units portion of the fault code (two slow blinks is 2). Three fast blinks followed by two slow blinks would be fault code 32. (See Table 10 for Blink Fault Code list.)

The LED code repeats as long as the fault exists. To clear the fault, press the RESET button.

Use Table 10 to identify fault code numbers, possible system failure and recommended troubleshooting procedures.

Table 10. Blinking Fault Codes and Recommended Troubleshooting.

Blink Code	System Failure	Recommended Troubleshooting
Code 1-1 *Low AC Line Voltage*	Low AC Line detected.	**1.** Check the relay module and display module connections. **2.** Reset and sequence the Relay Module. **3.** Check the 7800 power supply and make sure that frequency and voltage meet specifications. **4.** Check the backup power supply, as appropriate.
Code 1-2 *AC Quality Problem*	Excessive noise or device running on slow, fast, or AC line dropout detected.	
Code 2-1 *Unexpected Flame Signal*	Flame sensed when no flame is expected during STANDBY or PURGE.	**1.** Check that flame is not present in the combustion chamber; correct any errors. **2.** Make sure that the flame amplifier and flame detector are compatible. **3.** Check the wiring and correct any errors. **4.** Remove the flame amplifier and inspect its connections. Reseat the amplifier. **5.** Reset and sequence the relay module. **6.** If the code reappears, replace the flame amplifier and/or the flame detector. **7.** If the fault persists, replace the relay module.
Code 2-2 *Flame Signal Absent*	No-flame time present at the end of the PIlot Flame Establishing Period; lost during the Main Flame Establishing Period or during RUN.	**1.** Measure the flame signal. If one exists, verify that it meets specifications. **2.** Make sure that the flame amplifier and flame detector are compatible. **3.** Inspect the main fuel valve(s) and valve connection(s). **4.** Verify that the fuel pressure is sufficient to supply fuel to the combustion chamber. Inspect the connections to the fuel pressure switches. Make sure they are functioning properly. **5.** Inspect the Airflow Switch and make sure that it is functioning properly. **6.** Check the flame detector sighting position; reset and recycle. Measure the flame signal strength. Verify that it meets specifications. If not, refer to the flame detector and/or flame amplifier checkout procedures in the installation instructions. **7.** Replace the flame amplifier and/or the flame detector, if necessary. **8.** If the fault persists, replace the relay module.
Code 2-3 *Flame Signal Overrange*	Flame signal value is too high to be valid.	**1.** Make sure the flame detector and flame amplifier are compatible. **2.** Remove the flame amplifier and inspect its connections. Reset the flame amplifier. **3.** Reset and sequence the relay module. **4.** Check the flame detector sighting position; reset and recycle. Measure flame strength. Verify that it meets specifications. If not, refer to the flame detector and/or flame amplifier checkout procedures in the installation instructions. **5.** If the code reappears, replace the flame amplifier and/or the flame detector. **6.** If the fault persists, replace the relay module.

Table 10. Blinking Fault Codes and Recommended Troubleshooting. (Continued)

Blink Code	System Failure	Recommended Troubleshooting
Code 3-1 *Running/ Interlock Switch Problem*	Running or Lockout Interlock fault during Pre-Purge.	**1.** Check wiring; correct any errors. **2.** Inspect the fan; make sure there is no air intake blockage and that it is supplying air. **3.** Make sure the Lockout Interlock switches are functioning properly and the contacts are free from contaminants. **4.** Reset and sequence the relay module to Pre-Purge (place the TEST/RUN Switch in the TEST position, if available). Measure the voltage between terminal 7 and G (ground); line voltage should be present. Switch TEST/RUN back to RUN. **5.** If steps 1 through 4 are correct and the fault persists, replace the relay module.
Code 3-2 *Running/ Interlock On During Standby*	Lockout Interlock powered at improper point in sequence or On in Standby.	**1.** Check wiring to make sure that the Lockout Interlocks are connected properly between terminals 6 and 7. Correct any errors. **2.** Reset and sequence the relay module. **3.** If the fault persists, measure the voltage between terminal 6 and G (ground), then between terminal 7 and G. If there is line voltage at terminal 6 when the controller is off, the controller switch may be bad or is jumpered. **4.** If steps 1 through 3 are correct and there is line voltage at terminal 7 when the controller is closed and the fault persists, check for a welded or jumpered Running Interlock or Airflow Switch. Correct any errors. **5.** If steps 1 through 4 are correct and the fault persists, replace the relay module.
Code 3-3 *VPS in Improper State*	VPS (Valve Proving Switch) in wrong state during VPS Test.	**1.** Check wiring, making sure upstream valve is connected to terminal 9 and downstream valve is connected to terminal 17. **2.** Conduct Valve Seat leakage test using a manometer. **3.** Reset and sequence the relay module; if fault repeats, test VPS (connected to terminal 16) is functioning properly; replace if necessary. **4.** Reset and sequence the relay module. **5.** If fault persists, replace the relay module.
Code 4-1 *Purge Card Problem*	No purge card or the purge card timing has changed from the original configuration.	**1.** Make sure the purge card is seated properly. **2.** Inspect the purge card and the connector on the relay module for any damage or contaminants. **3.** Reset and sequence the relay module. **4.** If the fault code reappears, replace the purge card. **5.** Reset and sequence the relay module. **6.** If the fault code persists, replace the relay module.
Code 4-2 *Wiring Problem/ Internal Fault*	Pilot (ignition) valve terminal, main valve, ignition or Main Valve 2 was on when it should be off.	**WARNING** **Electrical Shock Hazard; Fire or Explosion Hazard.** **Can cause severe injury, death or property damage.** Remove system power and turn off power supply. **1.** Remove system power and turn off fuel supply. **2.** Check wiring; correct any errors. **3.** Inspect Pilot Fuel Valve(s), both places, and connections. **4.** Reset and sequence the relay module. **5.** If the fault persists, replace the relay module.
Code 4-3 *Flame Amplifier Problem*	Flame not sensed, or sensed when it should be on or off.	**1.** Check wiring; correct any errors. **2.** Make sure the flame amplifier and flame detector are compatible. **3.** Remove the flame amplifier and inspect the connections. Reseat the amplifier. **4.** Reset and sequence the relay module. **5.** If the code reappears, replace the flame amplifier and/or the flame detector. **6.** If the fault persists, replace the relay module.
Code 4-4 *Configuration Jumper Problem*	The configuration jumpers differ from the sample taken at startup.	**1.** Inspect the jumper connections. Make sure the clipped jumpers were completely removed. **2.** Reset and sequence the relay module. **3.** If the fault persists, replace the relay module.

Table 10. Blinking Fault Codes and Recommended Troubleshooting. (Continued)

Blink Code	System Failure	Recommended Troubleshooting
Code 5-1 *Pre-Ignition Interlock*	Pre-Ignition Interlock fault.	**1.** Check wiring and correct any errors. **2.** Check Pre-Ignition Interlock switches to assure proper functioning. **3.** Check fuel valve operation. **4.** Reset and sequence the relay module; monitor the Pre-Ignition Interlock status. **5.** If the fault persists, replace the relay module.
Code 5-2 *High Fire Sw. or Low Fire Sw.*	Either High Fire Switch or Low Fire Switch failure.	**1.** Check wiring and correct any errors. **2.** Reset and sequence the relay module. **3.** Use manual motor potentiometer to drive the motor open and closed. Verify at motor switch that the end switches are operating properly. Use RUN/TEST switch if manual potentiometer is not available. **4.** Reset and sequence the relay module. **5.** If the fault persists, replace the relay module.
Code 5-3 *Man-Open Sw.; Start Sw. or Control On*	Man-Open Switch, Start Switch or Control On in the wrong operational state.	**1.** Check wiring and correct any errors. **2.** Make sure that the Manual Open Valve Switch, Start Switch and Control are operating properly. **3.** Stat Switch held “On” too long. **4.** Reset and sequence the relay module. **5.** Reset and sequence the relay module. If the fault persists, replace the relay module (RM7838A1014, RM7838B1013, RM7838C1004, RM7838A2014, RM7838B2013, RM7838C2004 only).
Code 6-1 *Internal Faults*	Relay Module self-test failure.	**1.** Reset and sequence the relay module. **2.** If fault reappears, remove power from the device, reapply power, then reset and sequence the relay module. **3.** If the fault persists, replace the relay module.
Code 6-2 *Internal Faults*	Relay Module Self-Test failure.	**1.** Reset and sequence the relay module. **2.** If fault reappears, remove power from the device, reapply power, then reset and sequence the relay module. **3.** If fault does not repeat on the next cycle, check for electrical noise being copied into the relay module through the external loads or possibly an electrical grounding issue. **4.** If the fault persists, replace the relay module.
Code 6-3 *Device Specific*	Fault with special OEM input circuits.	**1.** Check wiring and operation of special OEM inputs. **2.** Reset and sequence the relay module. **3.** If fault reappears, remove power from the device, reapply power, then reset and sequence the relay module. **4.** If the fault does not repeat on the next cycle, check for electrical noise being copied into the relay module through the external loads or possibly an electrical grounding issue. **5.** If the fault persists, replace the relay module.
Code 6-4 *Accessory Fault*	VPS setup.	**1.** Make sure Relay Module VP is programmed. **2.** T6 and T17 powered at the same time—correct wiring. **3.** Reset control if fault persists. Replace relay module.
Code 7-7 *Unused*	Unused at this time.	—

APPENDIX A

Valve Proving Test

The Valve Proving System feature offers a systematic way of testing the valve seat integrity to assure the valves are indeed in the closed position when the system is off-line, in STANDBY.

WARNING

Explosion Hazard.
Can cause severe injury, death or property damage.
Leaking gas valves can result in fire or explosion. The Valve Proving System is designed to detect such leaks. A valve proving test time that is too short may allow unacceptable leaks to go undetected. Use the procedure in Appendix A to select sufficient valve test times to detect any unacceptable leak.

The following steps are to determine the test time for the relay module to verify the valve seats are not leaking at a rate of greater than/equal to 0.1% of the burner capacity.

Fig. 29 shows a typical valve train. The legend identifies information that will be used to fill out the worksheet that appears at the end of this appendix.

1. Identify items of your system and fill in the “Information” portion of the worksheet.
2. Go to the Lookup Tables noted (13, 14 or 15) to get the results for your system.

IMPORTANT

The Tables show information on Honeywell Valves only. Contact other valve manufacturers to obtain data on their specific valves.

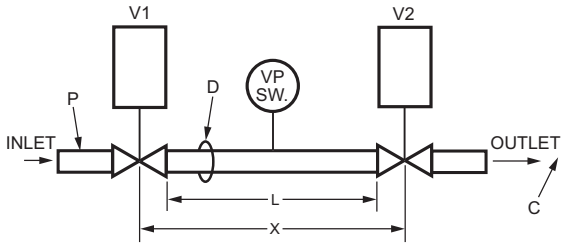

LEGEND

V1 UPSTREAM VALVE
V2 DOWNSTREAM VALVE
D PIPE DIAMETER (IN INCHES.) USED TO DETERMINE A; ARE FOUND IN TABLE III
L PIPE LENGTH (IN FEET)
P VALVE INLET PRESSURE (PSIG)
C BURNER MAX. FIRING (CFH)
X CALCULATED TEST VALVE TRAIN VOLUME

M22778

Fig. 28. Typical valve train layout.

3. Use appropriate Results column items to fill in the Valve Train Volume Formula and the Calculation of Valve Proving Test Time.
4. Round up the time to the nearest second.
5. The test time calculated is the time you will enter into the VPS Setup.

Calculation of Valve Train Volume

X = V1 + V2 + (A X L/144)

Calculation of Valve Proving Test Time

Test Time = 187,000 x (P x X)/C

Table 11. Valve Proving Test Time Symbols and Descriptions.

Symbol	Unit	Description
X	ft^3	Volume between the two valves to be tested.
V_1	ft^3	Volume of upstream valve outlet cavity.
V2	ft^3	Volume of downstream valve inlet cavity.
L	ft	Length of pipe between valves.
D	npt	Pipe Size—used to define A
A	$in.^2$	Pipe Cross Section Area (from Table 15)
Test Time	Seconds	Minimum VPS test period.
P	psi	Gas inlet pressure to upstream valve.
C	ft^3/hr	Burner Capacity.

NOTE: V1 is the outlet cavity of the upstream valve and V2 is the inlet cavity of the downstream valve.

NOTE: 10 seconds is the minimum test time allowed. If your calculations are less than 10 seconds, enter 10 seconds.

For Example:

We have a 2.5 MBTU burner with 2 psi valve train inlet pressure. The upstream valve is a proof-of-closure V5044 with a solenoid V4295 valve downstream. We have a 2 in. NPT pipe, 1-3/4 ft long, between the valves.

Table 12. VPS Worksheet Example.

Item	Description	Information	Lookup Table	Results	Formula Item
V1	Upstream Valve Volume	V5055	12	0.0218	V1
V2	Downstream Valve Volume	V4295	13	0.0267	V2
D	Pipe Size NPT (in.)	2 in. NPT	14	3.356	A
L	Pipe Length (ft)	1.75 ft	—	1.75	L
P	Valve Inlet Pressure (psig)[a]	2	—	2	P
C	Burner Maximum Firing (cf/hr)[b]	2.5 mbtu	—	2500	C

[a] Divide inches w.c. by 27.7 to get psi.

[b] Divide Btuh by 1000 to get cf/hr for natural gas or by 2550 to get cf/hr for LP gas.

Calculation of Valve Train Volume:

X = V1 + V2 + (A x L ÷ 144)

X = 0.0218 + 0.0267 + (3.356 x 1.75 ÷ 144) = 0.0893.

Calculation of Valve Proving Test Time:

Test Time = 187,000 x (P x X ÷ C)

Test Time = 187,000 x (2 x 0.0893 ÷ 2500) = 13.4 seconds.

Round up to 14 seconds; enter 14 seconds into the VPS Setup.

Table 13. V1 Upstream Volumes for Honeywell Valves.

Pipe Size NPT (inches)	V4295	V4297A1013	V4297A1005	V48	V5055	V5097A1004	V5097A1012
3/8	0.0002	—	—	—	—	—	—
1/2	0.0002	—	—	—	—	—	—
3/4	0.0008	0.0093	0.0090	0.0010	0.0046	0.0066	—
1	0.0009	0.0093	0.0090	0.0010	0.0046	0.0066	—
1-1/4	0.0045	0.0093	0.0090	0.0035	0.0046	0.0066	—
1-1/2	0.0045	0.0093	—	0.0035	0.0218	0.0066	—
2	0.0089	0.0093	—	0.0048	0.0218	0.0066	0.0285
2-1/2	0.0441	—	—	0.0048	0.0227	—	0.0285
3	0.0441	—	—	0.0048	0.0227	—	0.0285
4	—	—	—	—	0.0779	—	—

Table 14. V2 Downstream Volumes for Honeywell Valves.

Pipe Size NPT (inches)	V4295	V4297A1013	V4297A1005	V48	V5055	V5097A1004	V5097A1012
3/8	0.0011	—	—	—	—	—	—
1/2	0.0011	—	—	—	—	—	—
3/4	0.0026	0.0282	0.0232	0.0048	0.0067	0.0093	—
1	0.0036	0.0282	0.0232	0.0048	0.0067	0.0093	—
1-1/4	0.0148	0.0282	0.0232	0.0110	0.0067	0.0093	—
1-1/2	0.0148	0.0282	—	0.0110	0.0238	0.0093	—
2	0.0267	0.0282	—	0.0184	0.0238	0.0093	0.0303
2-1/2	0.0554	—	—	0.0184	0.0245	—	0.0303
3	0.0554	—	—	0.0184	0.0245	—	0.0303
4	—	—	—	—	0.0801	—	—

Table 15. Schedule 40 Pipe Internal Cross-Sectional Area.

Pipe Size NPT (Inches)	Cross-Sectional Area (Sq. In.) "A"
3/8	0.191
1/2	0.304
3/4	0.533
1	0.864
1-1/4	1.498
1-1/2	2.036
2	3.356
2-1/2	4.788
3	7.393
4	12.730

Table 16. VPS Worksheet.

Item	Description	Information	Lookup Table	Results	Formula Item
V1	Upstream Valve Volume		12		V1
V2	Downstream Valve Volume		13		V2
D	Pipe Size NPT (in.)		14		A
L	Pipe Length (ft)		—		L
P	Valve Inlet Pressure (psig)[a]		—		P
C	Burner Maximum Firing (cf/hr)[b]		—		C

[a] Divide inches w.c. by 27.7 to get psi.

[b] Divide Btuh by 1000 to get cf/hr for natural gas or by 2550 to get cf/hr for LP gas.

SAFETY AND SECURITY

Physical device protection

Device shall be accessible to authorized personnel only – Installation on publicly accessible places is not recommended as this could lead to unwanted and potentially unsafe changes to device (wiring, configuration, etc).

It is recommended to lock the device in an enclosed cabinet with access allowed only to approved and trained personnel. Also, it is strongly advised to keep all the wiring of device physically secure.

Physical protection of the device is applied via Run/Test switch label/seal. It is intended to prevent and detect unauthorized access.

Modbus & DDL Interface security

Any conducts critical to device functionality (DDL, Modbus lines etc.) shall be physically protected (installed outside public access) since they could be damaged or tampered-with by unauthorized people, either accidentally or for purpose.

Modbus RS-485 & DDL protocols do not support security features. For DDL interface - only DDL devices shall be connected to the Burner Controller DDL line.

License agreement

Copying and reverse engineering is prohibited by the law.

APPENDIX B: RM7800L/40G,L, EC7840L IGNITION OPTIONS

Column 1 lists the ignition option.

Column 2 lists the figure letter that shows the connections for that option. The figure letters refer to the figures on pages 30–32.

Column 3 refers to the fuel changeover switch and how many connections or poles that would be required.

Table 17. RM7800L/40G,L, EC7840L Ignition Options

Ignition Options	Figure Letter	Fuel Changeover Poles
No Valve Proving		
Single Fuel		
- MFEP 10s	A	-
- MFEP 15s	B	-
- DSI	C	-
Dual Fuel		
MFEP timed for both		
- Gas 10s, Oil 10s	D	2
- Gas 10s, Oil 15s	E	2
- Gas 15s, Oil 10s	F	2
- Gas 15s, Oil 15s	G	2
- Gas 10s, Oil DSI	H	3
- Gas 15s, Oil DSI	I	3
- Gas DSI, Oil 10s	J	3
- Gas DSI, Oil 15s	K	3
- DSI both	L	2
Valve Proving on Gas		
Single Fuel		
- MFEP 10s	M	-
- MFEP 15s	Not Possible	
- DSI	N	-
Dual Fuel		
MFEP timed for both		
- Gas 10s, Oil 10s	O	4
- Gas 10s, Oil 15s	P	4
- ~~Gas 15s~~, Oil 10s	Not Possible	
- ~~Gas 15s~~, Oil 15s	Not Possible	
- Gas 10s, Oil DSI	Q	5
- ~~Gas 15s~~, Oil DSI	Not Possible	
- Gas DSI, Oil 10s	R	4
- Gas DSI, Oil 15s	S	4
- DSI Both	T	4
Gas Direct Spark Ignition during VPS Selection (powering terminal 17) automatically chooses 4 second Ignition Trial Period, regardless of configuration resistor JR1 status		
CAUTION! The above options are ONLY suggestions—BE SURE to check local approval agencies for timings acceptable for your application.		

APPENDIX B: 7800 IGNITION OPTIONS

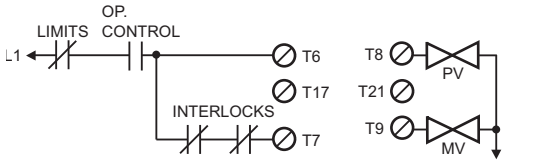

A. NO VP/SINGLE FUEL:

M24098A

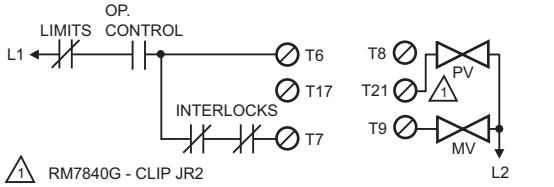

1 RM7840G - CLIP JR2

B. NO VP/SINGLE FUEL

M24099A

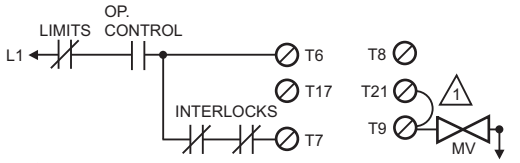

1 RM7840G - CONNECT DIRECTLY TO TERMINAL 21.

C. NO VP/SINGLE FUEL: DSI

M24120

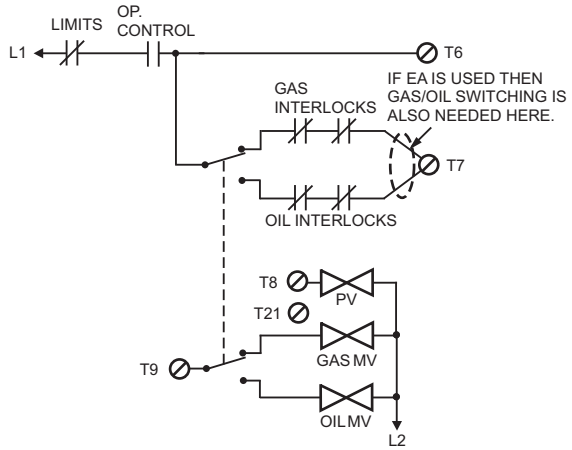

D. NO VP/DUAL FUEL: BOTH 10 SECOND MFEP

M24121A

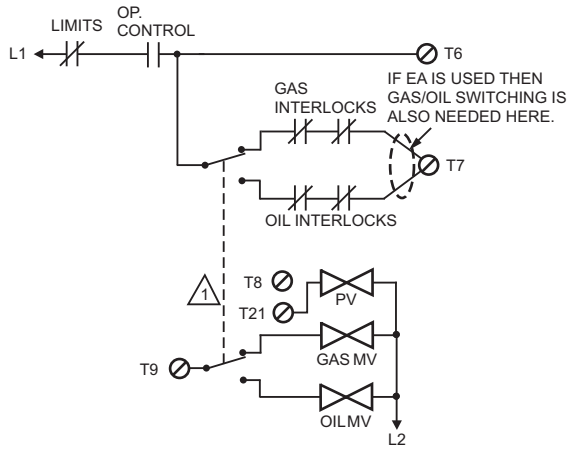

1 RM7840G CLIP JR2

E. NO VP/DUAL FUEL: 15 SECOND MFEP

M24122A

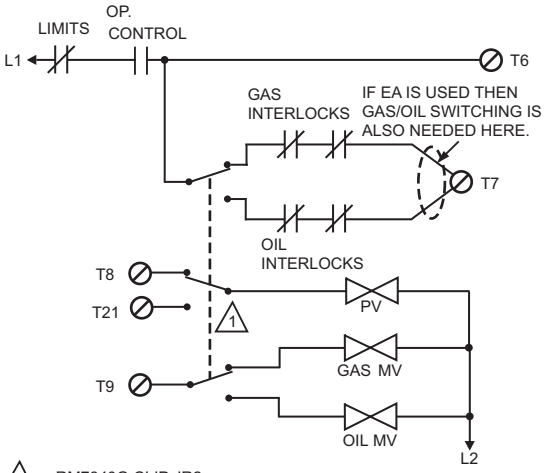

1 RM7840G CLIP JR2

F. NO VP/DUAL FUEL: GAS 10 SECOND MFEP, OIL 15 SECOND MFEP

M24123

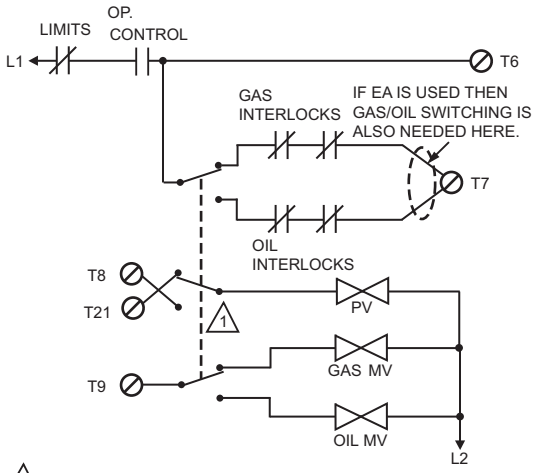

1 RM7840G CLIP JR2.

G. NO VP/DUAL FUEL: GAS 15 SECOND MFEP, OIL 10 SECOND MFEP

M24124A

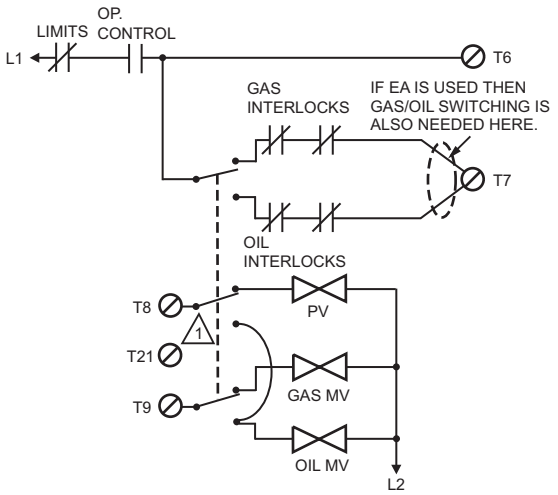

1 RM7840G: A SEPARATE POLE NEEDED TO CONNECT OIL MV TO TERMINAL 21.

H. NO VP/DUAL FUEL: GAS 10 SECOND MFEP, OIL DSI

M24125A

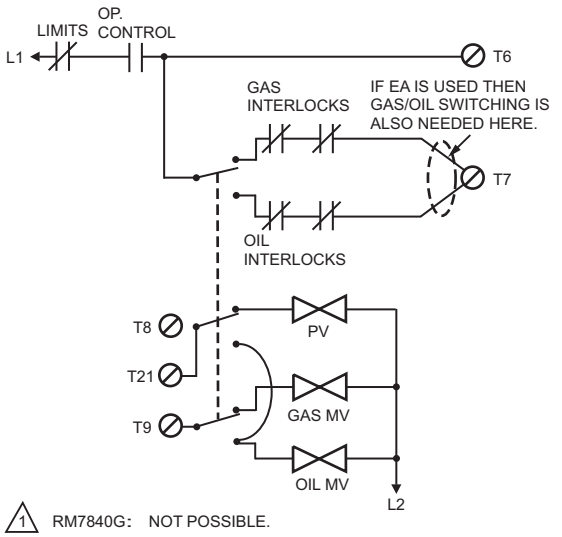

1 RM7840G: NOT POSSIBLE.

I. NO VP/DUAL FUEL: GAS 15 SECOND MFEP, OIL DSI M24126A

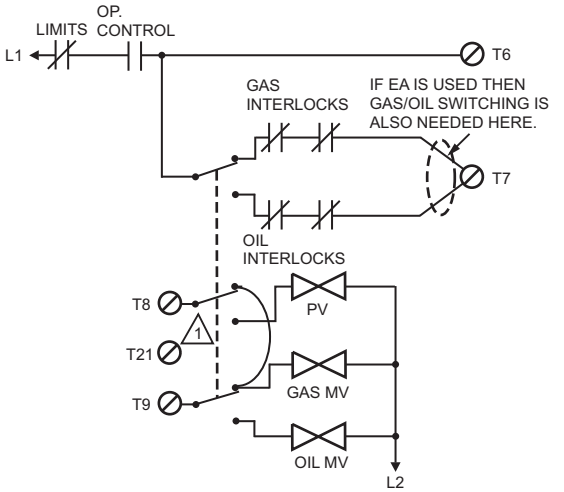

1 RM7840G: REQUIRES SEPARATE POLE TO CONNECT GAS MV TO TERMINAL 21.

J. NO VP/DUAL FUEL: GAS DSI, OIL 10 SECOND MFEP M24127A

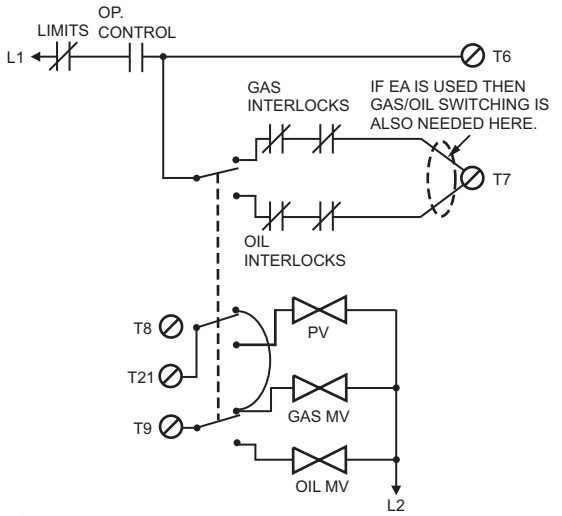

1 RM7840G: NOT POSSIBLE.

K. NO VP/DUAL FUEL: GAS DSI, OIL 15 SECOND MFEP M24128A

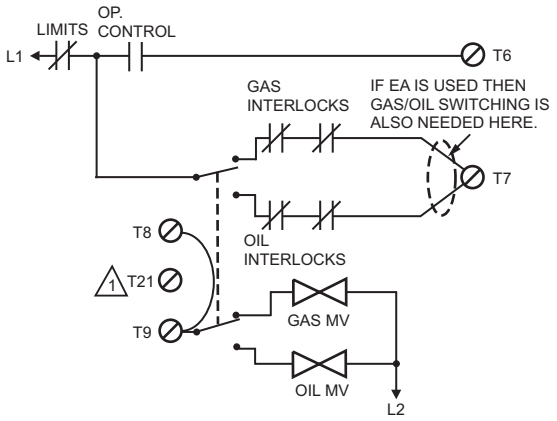

1 RM7840: NO JUMPER - SWITCH FUEL OFF TERMINAL 21.

L. NO VP/DUAL FUEL: BOTH DSI M24129A

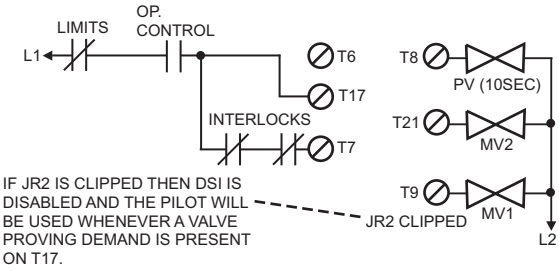

M. VALVE PROVING/GAS ONLY M24130

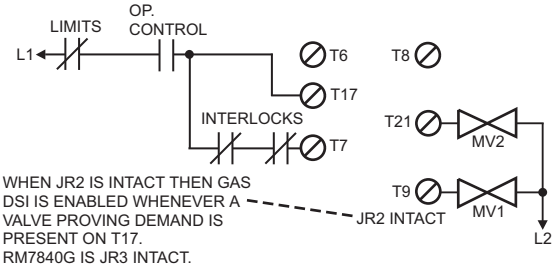

N. VP/GAS ONLY DSI M24131A

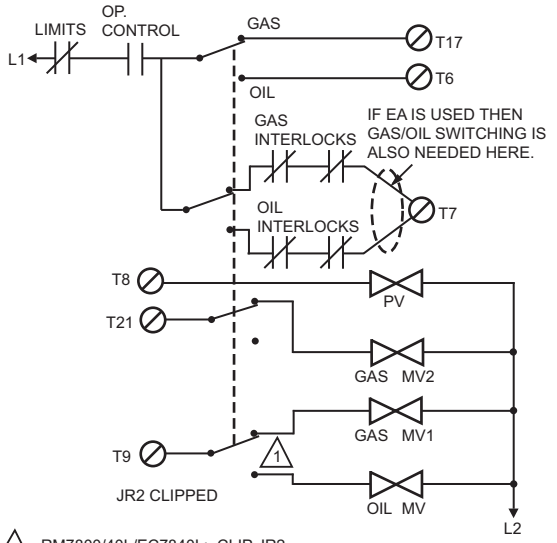

1 RM7800/40L/EC7840L: CLIP JR2.
RM7840G: CLIP JR3.

O. VALVE PROVING/DUAL FUEL: 10 SECOND MFEP BOTH FUELS M24132A

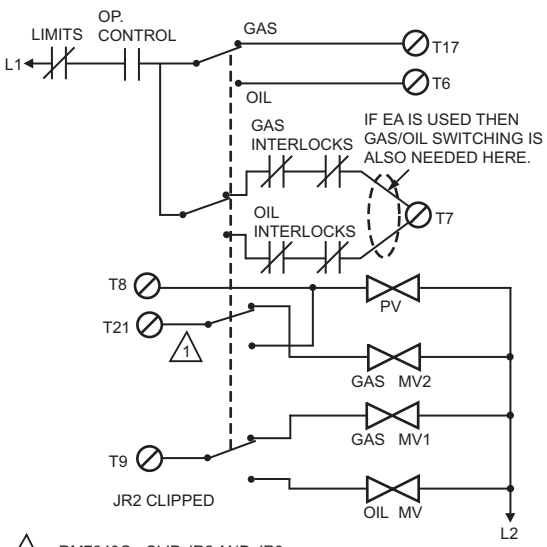

1 RM7840G: CLIP JR2 AND JR3.

P. VALVE PROVING/DUAL FUEL: GAS 10 SECOND MFEP, OIL 15 SECOND MFEP

M24133B

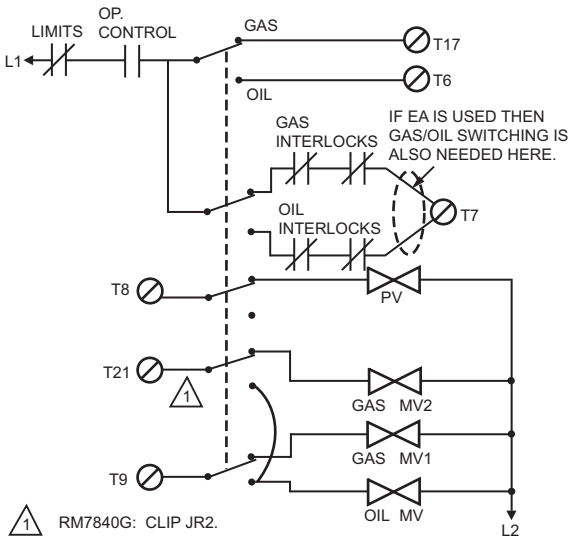

1 RM7840G: CLIP JR2.

Q. VALVE PROVING/DUAL FUEL: GAS: 10 SECOND MFEP, OIL: DSI

M24163B

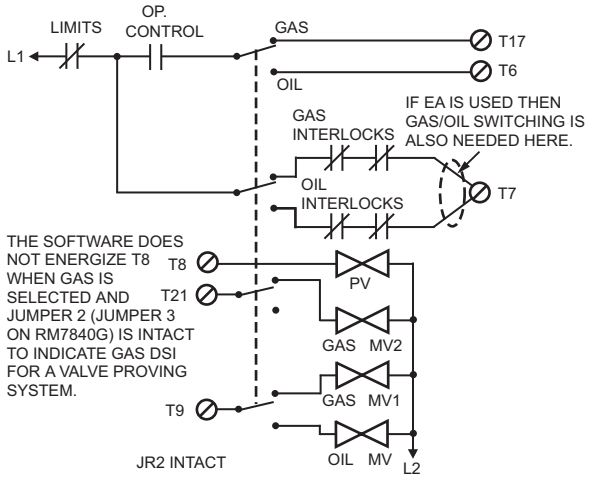

R. VALVE PROVING: GAS DSI, OIL 10 SECOND MFEP

M24134A

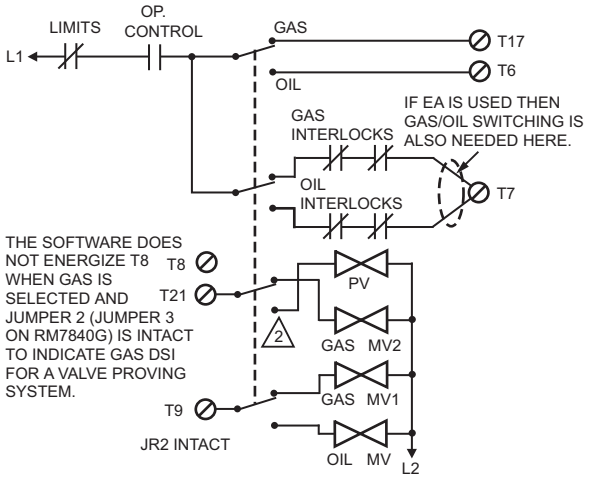

2 RM7840G: CLIP JR2.

S. VALVE PROVING/DUAL FUEL: GAS DSI, OIL 15 SECOND MFEP.

M24135A

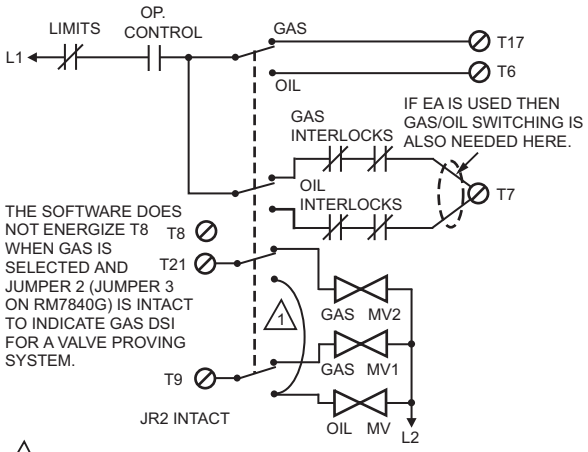

1 RM7840G: CONNECT OIL VALVE DIRECTLY TO TERMINAL 21 SIDE OF FUEL SWITCH - DO NOT USE THE JUMPER.

T. VALVE PROVING/DUAL FUEL: DSI FOR GAS AND OIL

M24136A