PS-N12CP

Amplifier Unit, M8 Connector Type, Expansion Unit, PNP

*Please note that accessories depicted in the image are for illustrative purposes only and may not be included with the product.

Specifications

Model		PS-N12CP
Type		M8 connector
Output		PNP
Main unit/Expansion unit		Expansion unit
I/O	Control outputs	1 output
	External input	1 input
Output selection		LIGHT-ON/DARK-ON (switch-selectable)
Timer function		Timer OFF/OFF-delay timer/ON-delay timer/One-shot timer, Timer duration selectable: 1 ms to 9999 ms, Maximum error against the setting value: ±10% max.
Control output		PNP open collector 30 V, (without expansion) 100 mA max., (with expansion) 20 mA max, residual voltage 1.2 V max. (when the output current is 10 mA or less)/2.2 V max. (when the output current is 10 to 100 mA)
Number of interference prevention units		4 for TURBO/SUPER/ULTRA/MEGA (When set to DOUBLE, the number of interference-prevention units will be doubled)
Response time		500 µs (TURBO) /1 ms (SUPER) /4 ms (ULTRA) /16 ms (MEGA)
External input		Input time 2 ms (ON)/20 ms (OFF) or more*1
Case size		H 32.6 mm 1.28"× W 9.8 mm 0.39" × L 78.7 mm 3.1"
Unit expansion		Up to 16 units (Up to 17 units including 1 main unit can be connected in total.)
Protection circuit		Reverse polarity protection, Over-current protection, Surge absorber
Rating	Power voltage	24 VDC (operating voltage 10 to 30 VDC (with ripple)), Ripple (P-P) 10 % or less, Class 2 or LPS
	Power consumption	Normal: 860 mW or less (at 30V. 30 mA max. at 24 V, 35 mA max. at 12 V) Eco on mode (ALL): 750 mW or less (at 30V. 26 mA max. at 24 V, 28 mA max. at 12 V) Eco Full mode: 540 mW or less (at 30V. 19 mA max. at 24 V, 21 mA max. at 12 V)
Environmental resistance	Ambient temperature	-20 to +55 °C -4 to 131 °F (No freezing)*2
	Relative humidity	35 to 85 % RH (No condensation)
	Vibration resistance	10 to 55 Hz, Double amplitude 1.5 mm 0.06", 2 hours in each of the X, Y, and Z directions
	Shock resistance	500 m/s², 3 times in each of the X, Y, and Z directions
Material	Case	Main unit and cover material: Polycarbonate
	Cable	PVC
Weight		Approx. 20 g

*1 Input time is 25 ms (ON)/25 ms (OFF) when the external calibration time is selected.
*2 If more than one unit is used together, the ambient temperature varies with the conditions below. Mount the units on the DIN rail with mounting brackets and check that the output current is 20 mA or less for a unit.

ПРОМЭЛЕКТРОНИКА / sales@prom-elec.com

One or two more units connected: -20 to +55 °C -4 to 131 °F; 3 to 10 more units connected: -20 to +50 °C -4 to 122 °F; 11 to 16 more units connected: -20 to +45 °C -4 to 113 °F.

Dimensions

* Download CAD file or product manual for larger image/text and more detail.

PS-N12CN/N12CP M8 connector type, Expansion unit

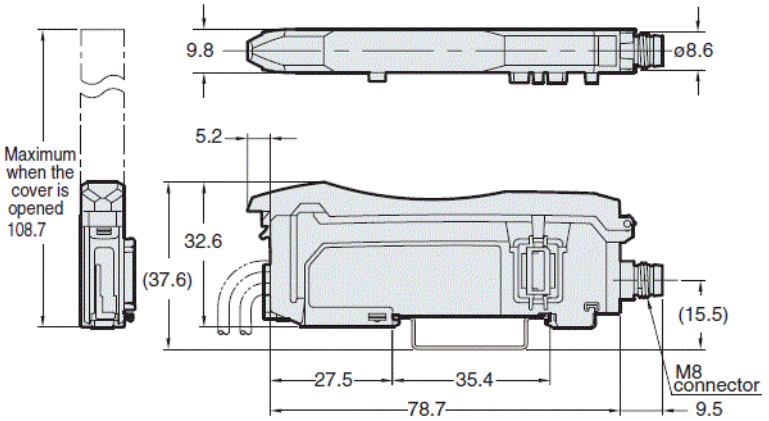

End unit (**OP-26751** optional)

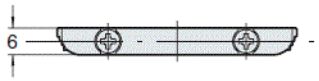

DIN-rail mounting

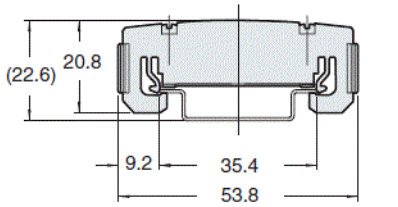

Material: Polycarbonate

M8 connector cable (**OP-73864/73865** optional)

Cable length	L (m)
OP-73864	2
OP-73865	10

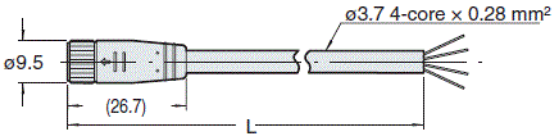

Common for all types
When several units are connected:

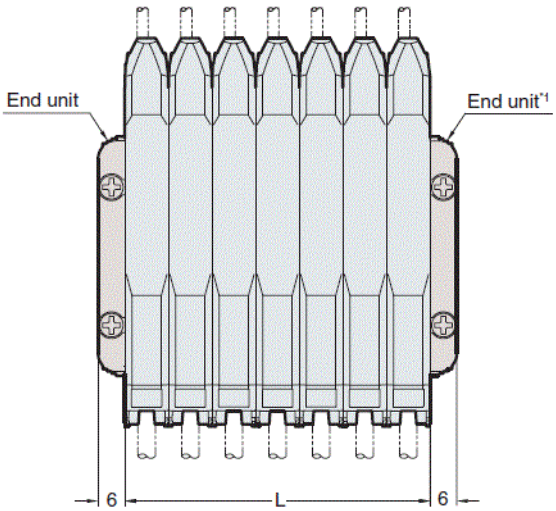

*1 End units must be used when several units are connected.(**OP-26751**)

No. of units	L(mm)
1	9.8
2	19.6
3	29.4
4	39.2
5	49.0
6	58.8
7	68.6
8	78.4
9	88.2
10	98.0
11	107.8
12	117.6
13	127.4
14	137.2
15	147.0
16	156.8
17	166.6