AI-H160

Separate Amplifier Model: Sensor Head, 160 mm

*Please note that accessories depicted in the image are for illustrative purposes only and may not be included with the product.

Specifications

Model		AI-H160
Installation Distance		140 to 180 mm 5.51 to 7.09"
Detection Area	1X Zoom to 4X Zoom	13 × 13 mm 0.51 × 0.51" to 52 × 52 mm 2.05 × 2.05"*1
	Digital Zoom	1X to 4X (17 steps) adjustment, zoom position adjustment*1
Light Receiving Element		BW CMOS
Transmitter	Light Source	Infrared LED (850 nm)
	Lighting Method	Pulse lighting
Indicators		1 (green/red/orange)
Environmental resistance	Enclosure rating	IP67*2
	Ambient temperature	-10 to +50 °C 14 to 122 °F (No freezing)
	Relative humidity	35 to 85 % RH (No condensation)
	Vibration resistance	10 to 55 Hz, Double amplitude 1.5 mm 0.06", 2 hours in each of the X, Y, and Z directions
	Shock resistance	500 m/s², 3 times in each of 6 directions
Materials		Main unit case: Zinc die-cast/PBT; Front cover: Acrylic (hard coat); Cable: PVC Operation indicator: PPSU; Polarized filter case: POM
Weight		Approx. 70 g (including polarized filter)

*1 When positioned in the midpoint of the installation distance range.
*2 Except when polarized filters or dome filters are mounted.

ПРОМЭЛЕКТРОНИКА / sales@prom-elec.com

Dimensions

* Download CAD file or product manual for larger image/text and more detail.

ai-h160_dimension_01.gif

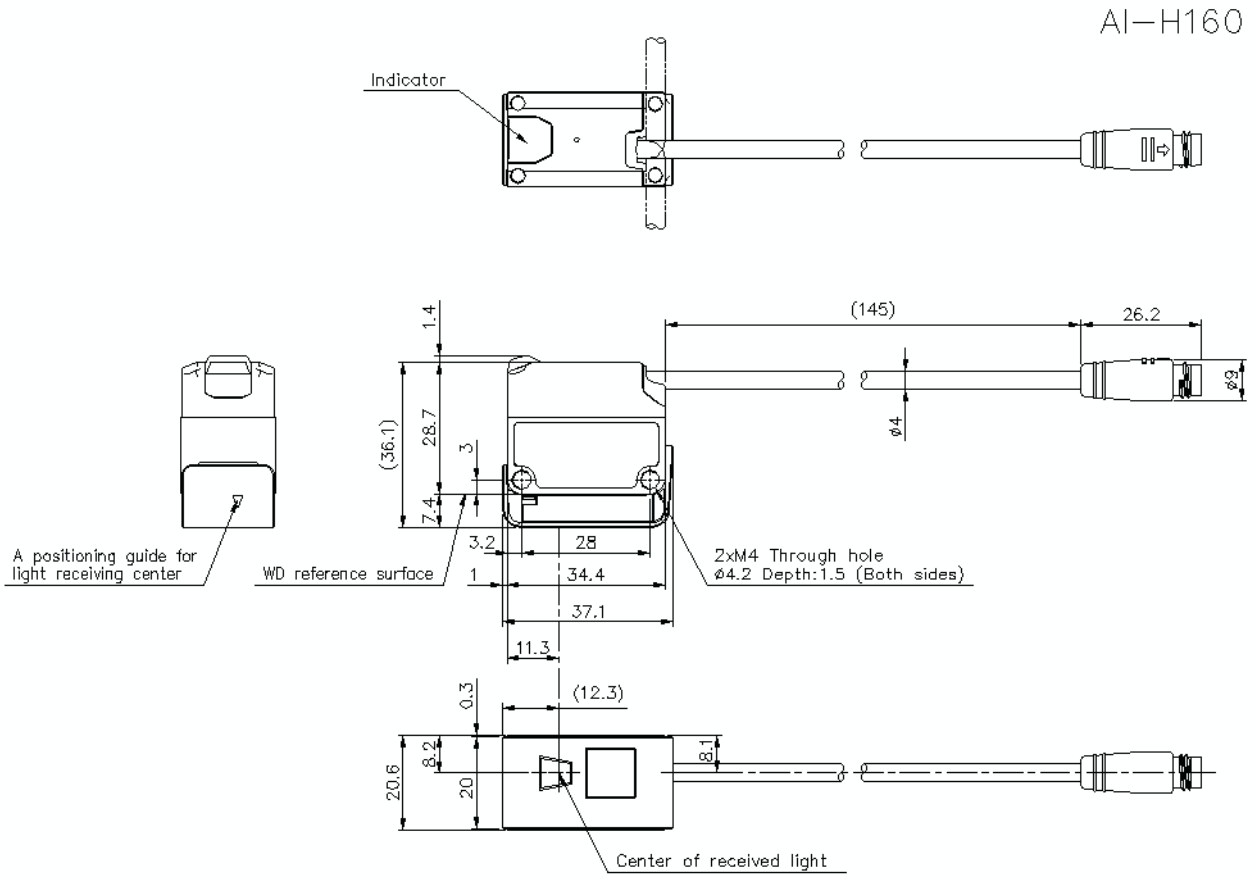

aih050-160_d16h_dimension_01.gif

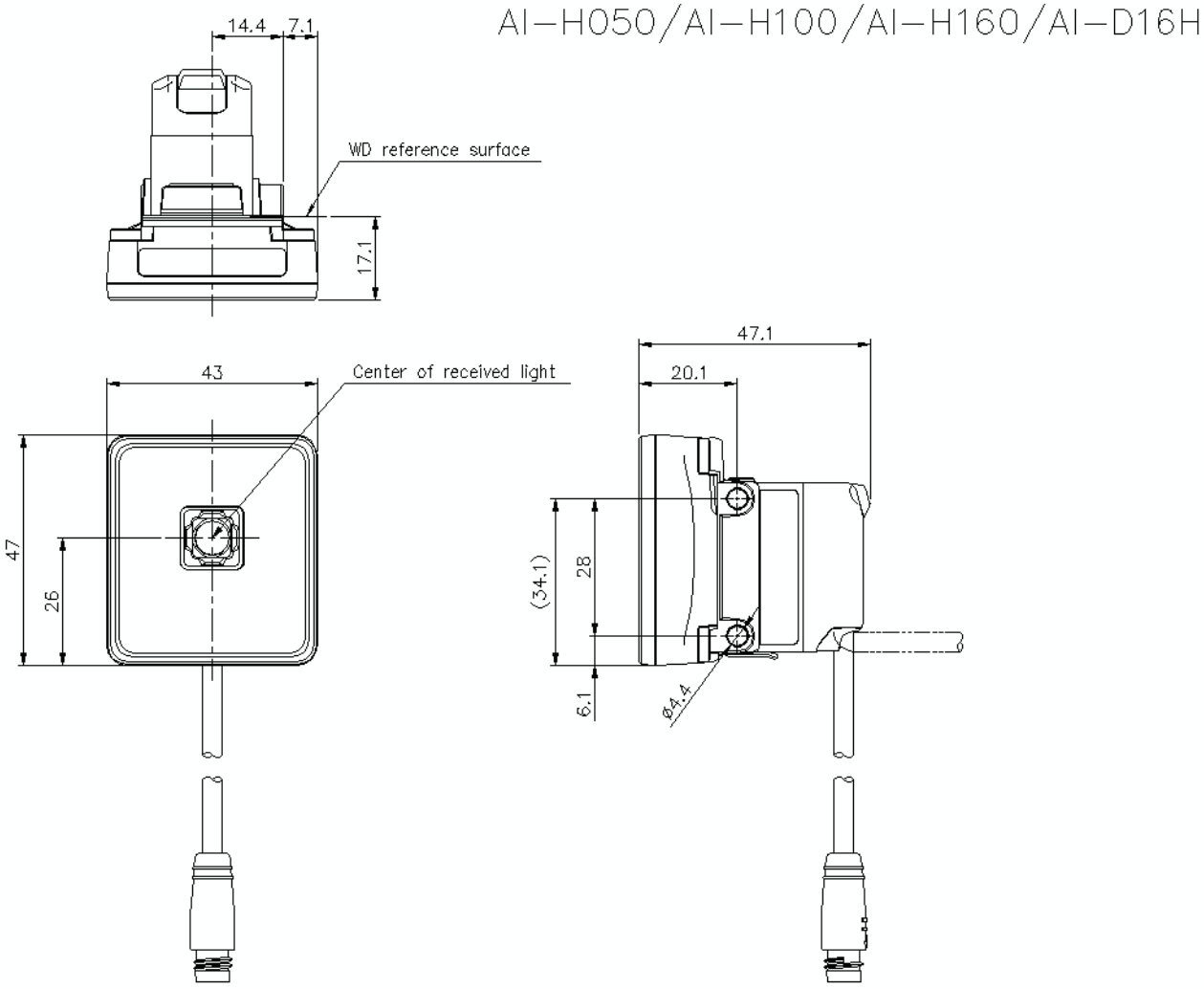

aih100_160_d32h_dimension_01.gif

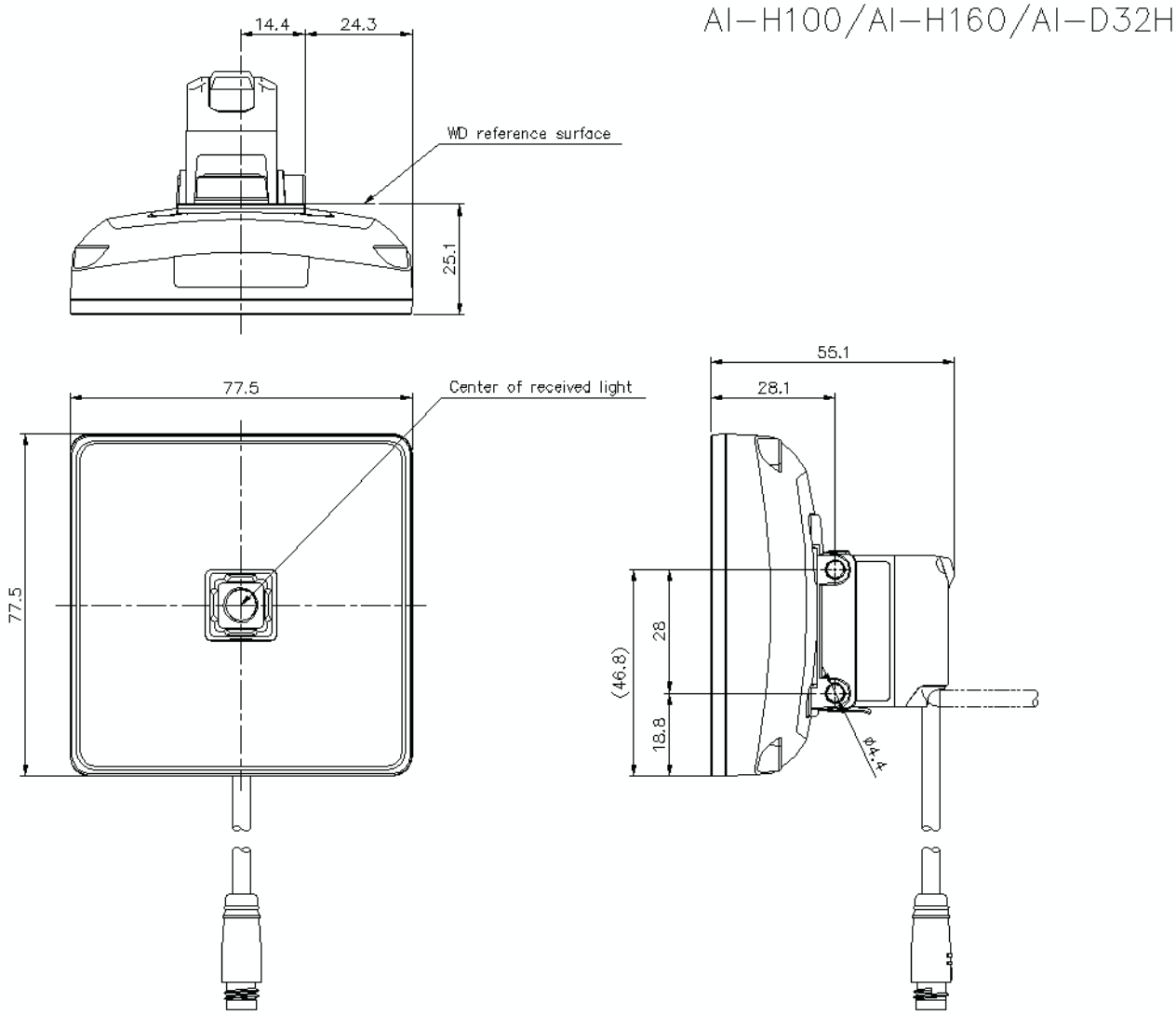

aih160_op88104_dimension_01.gif

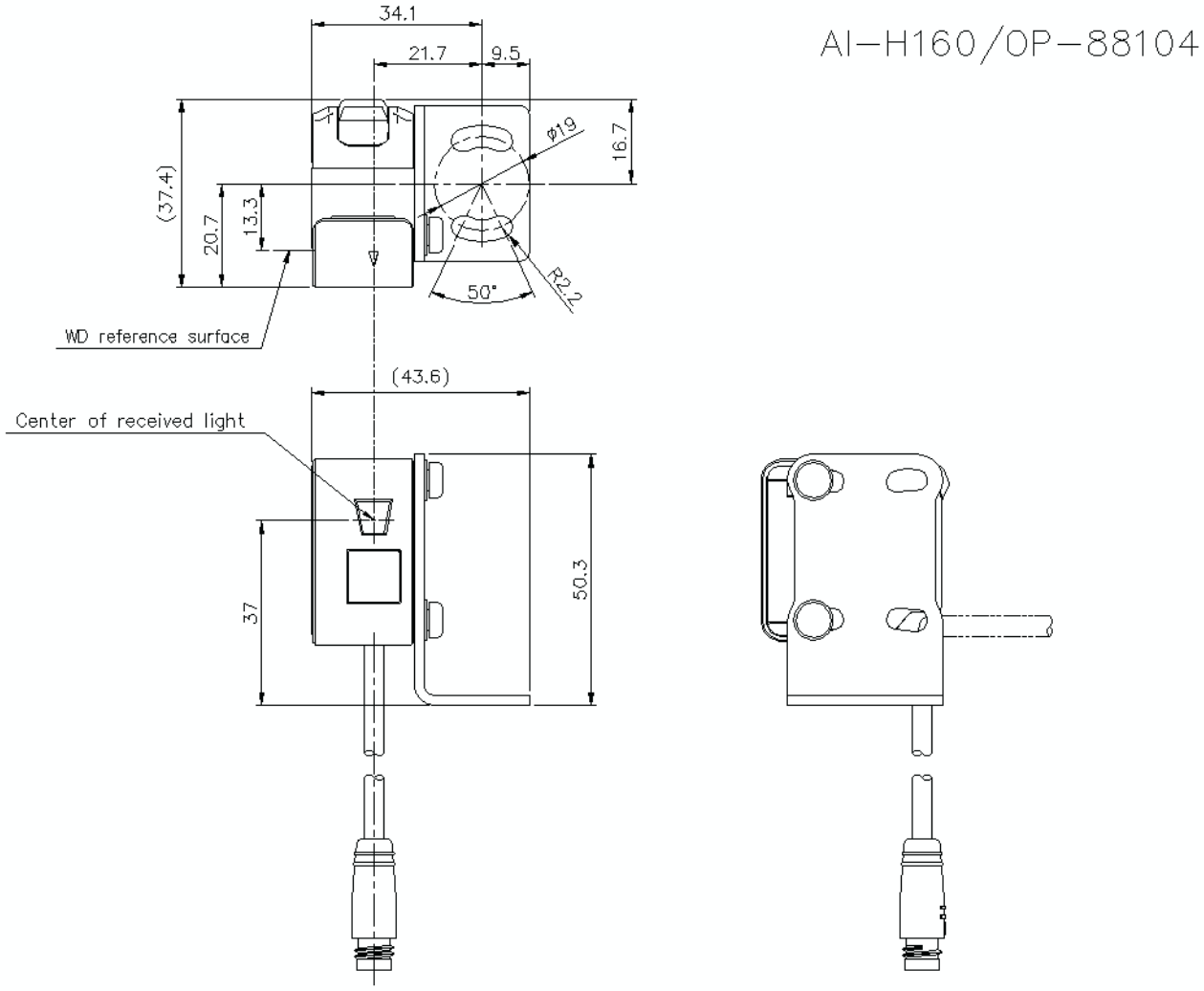

aih160_op88105_dimension_01.gif

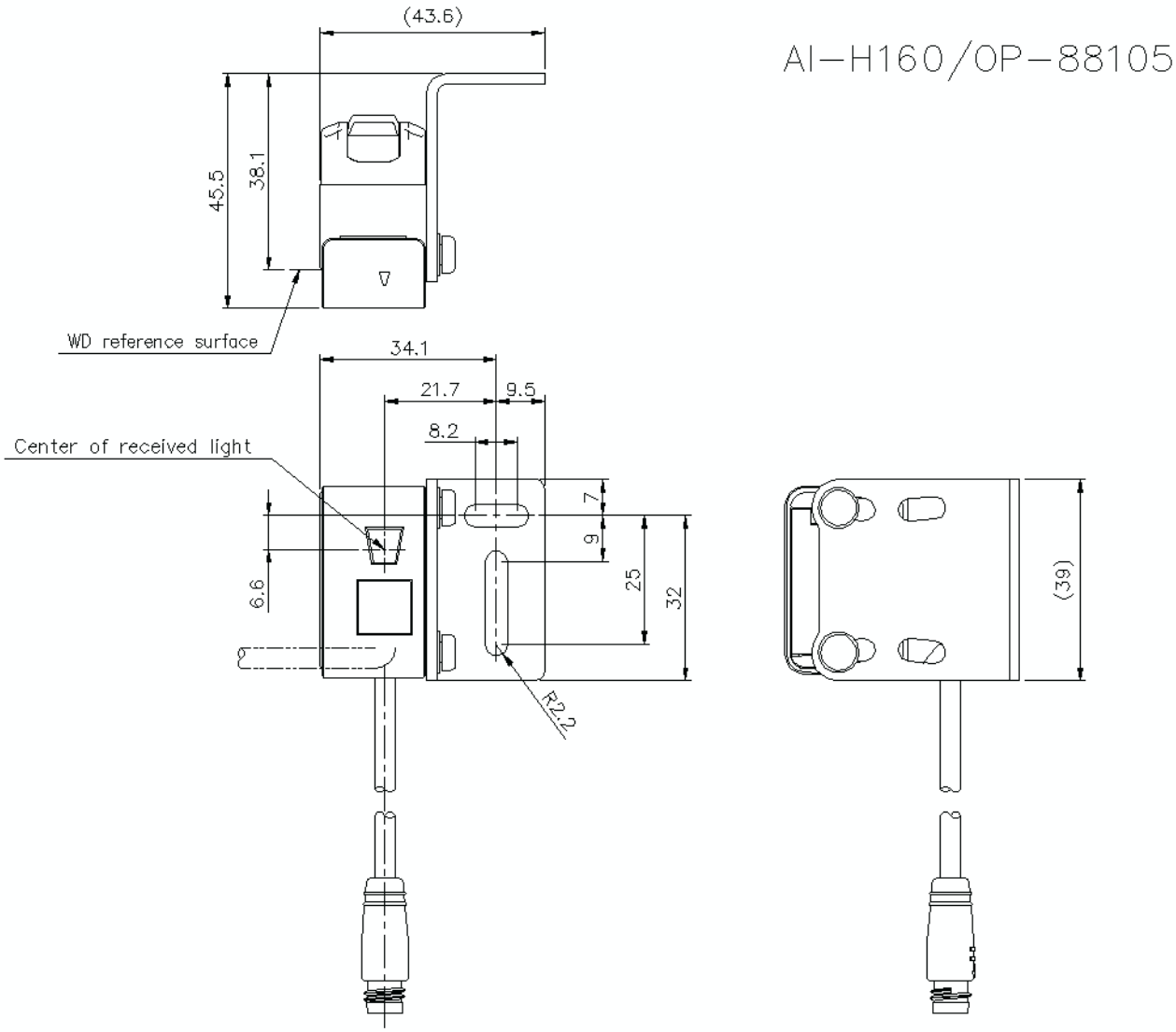

aih160_op88106_dimension_01.gif

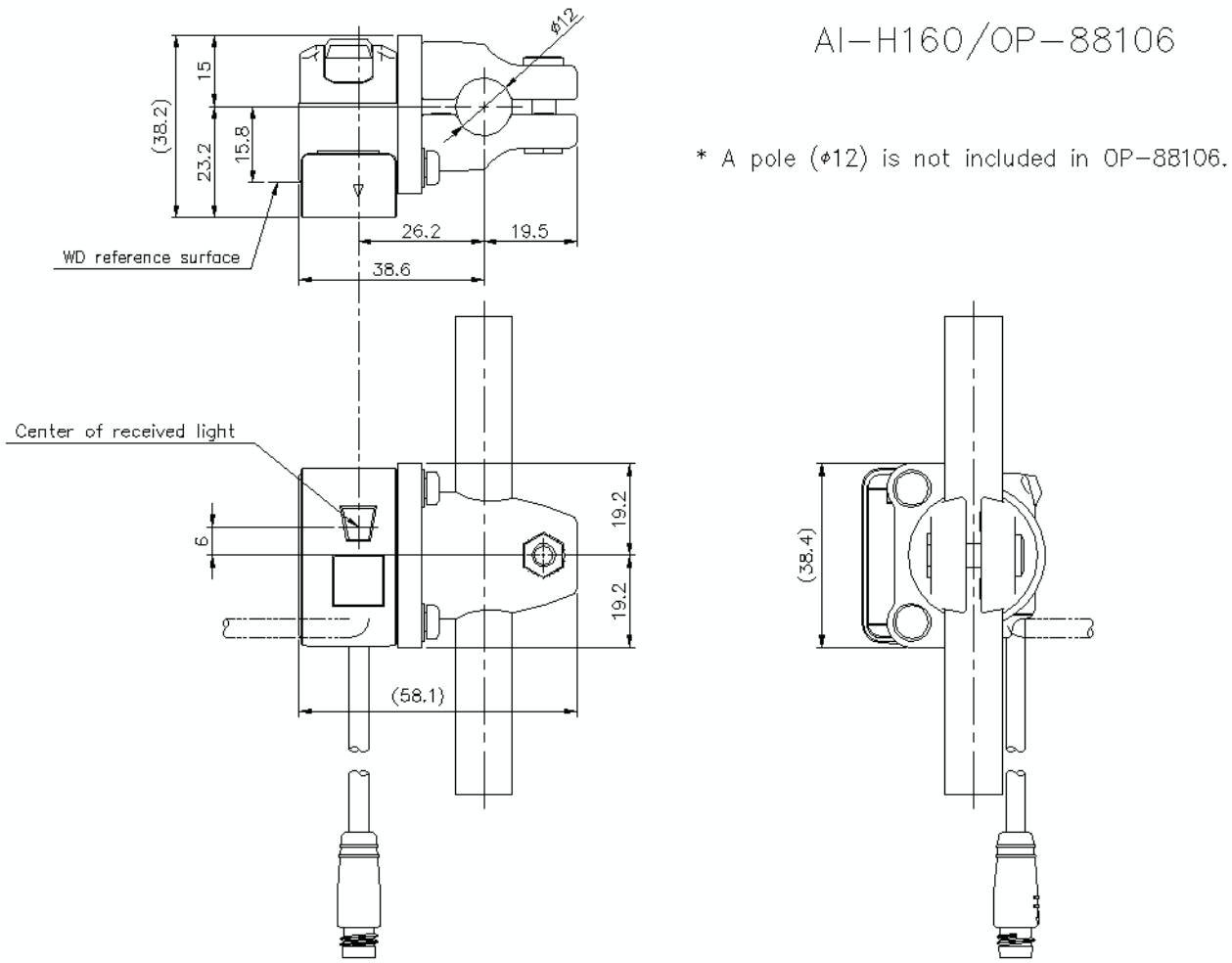

aih_d16h_88104_dimension_01.gif

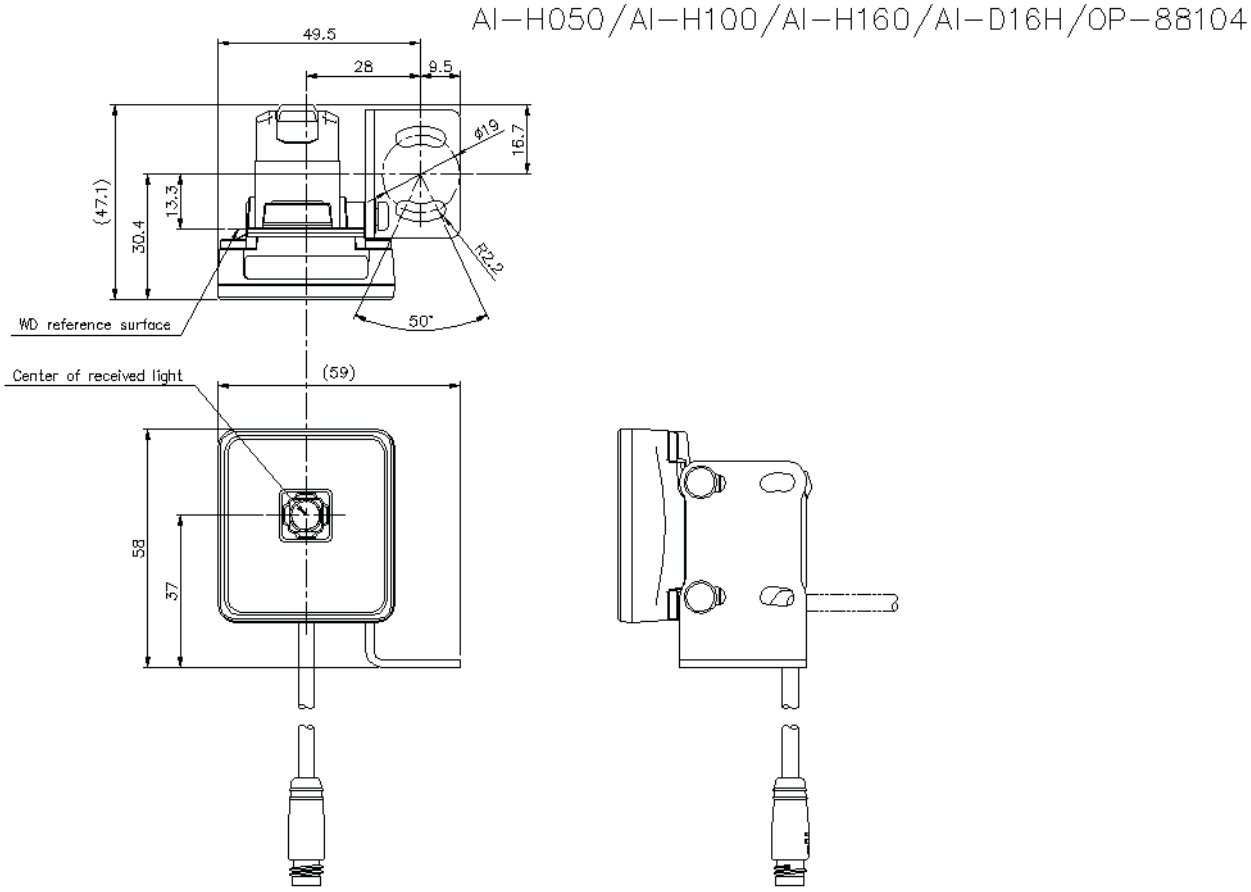

aih_d16h_88105_dimension_01.gif

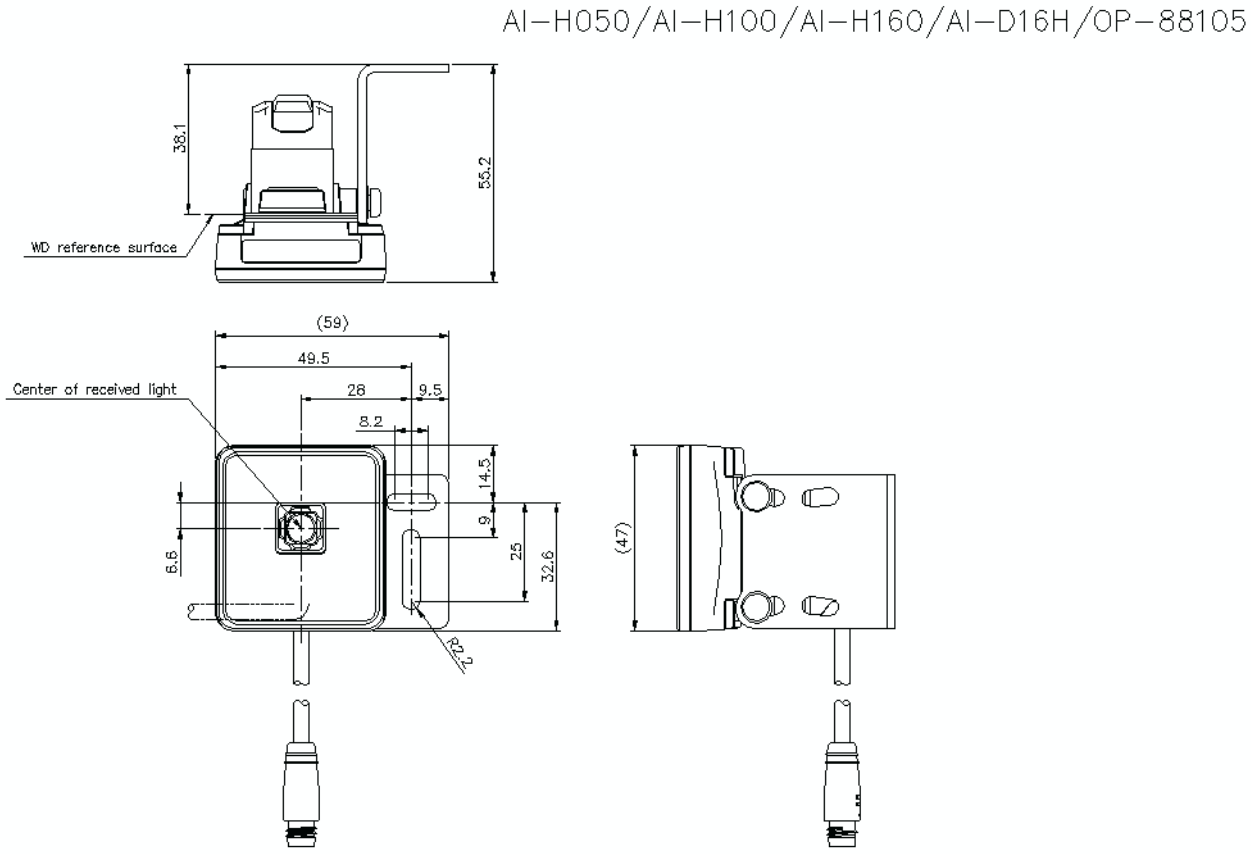

aih_d16h_88106_dimension_01.gif

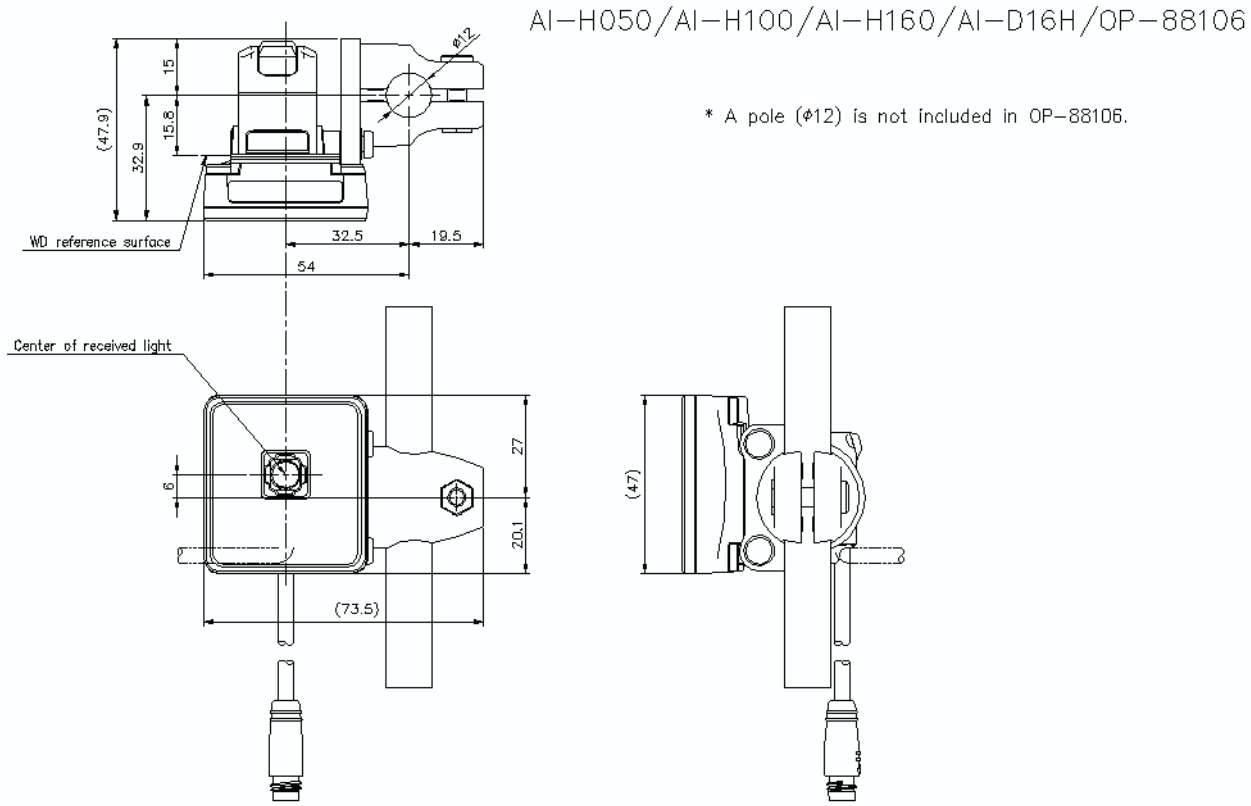

aih_d32h_88104_dimension_01.gif

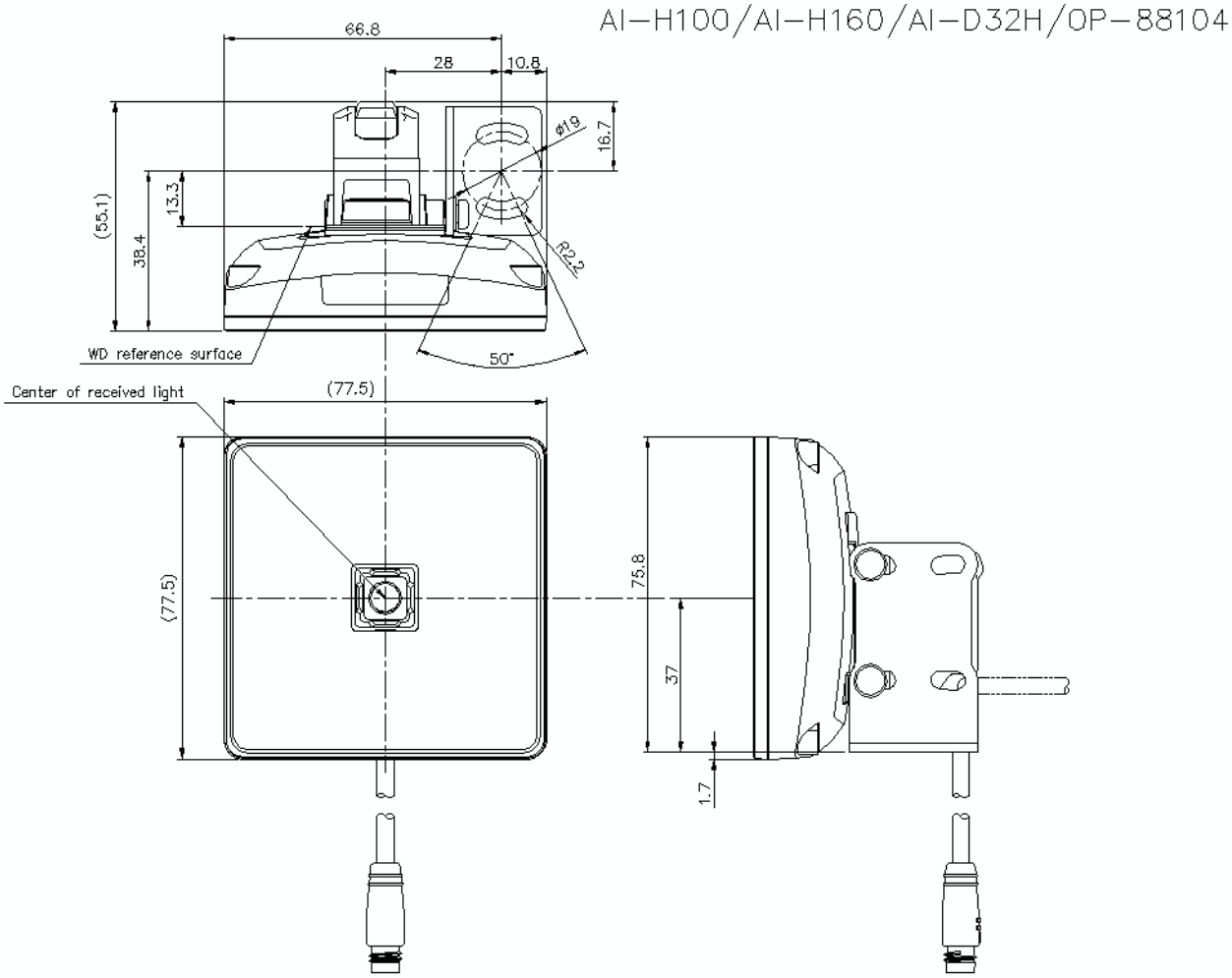

aih_d32h_88105_dimension_01.gif

■ AI-H100/H160 + AI-D32H + OP-88105

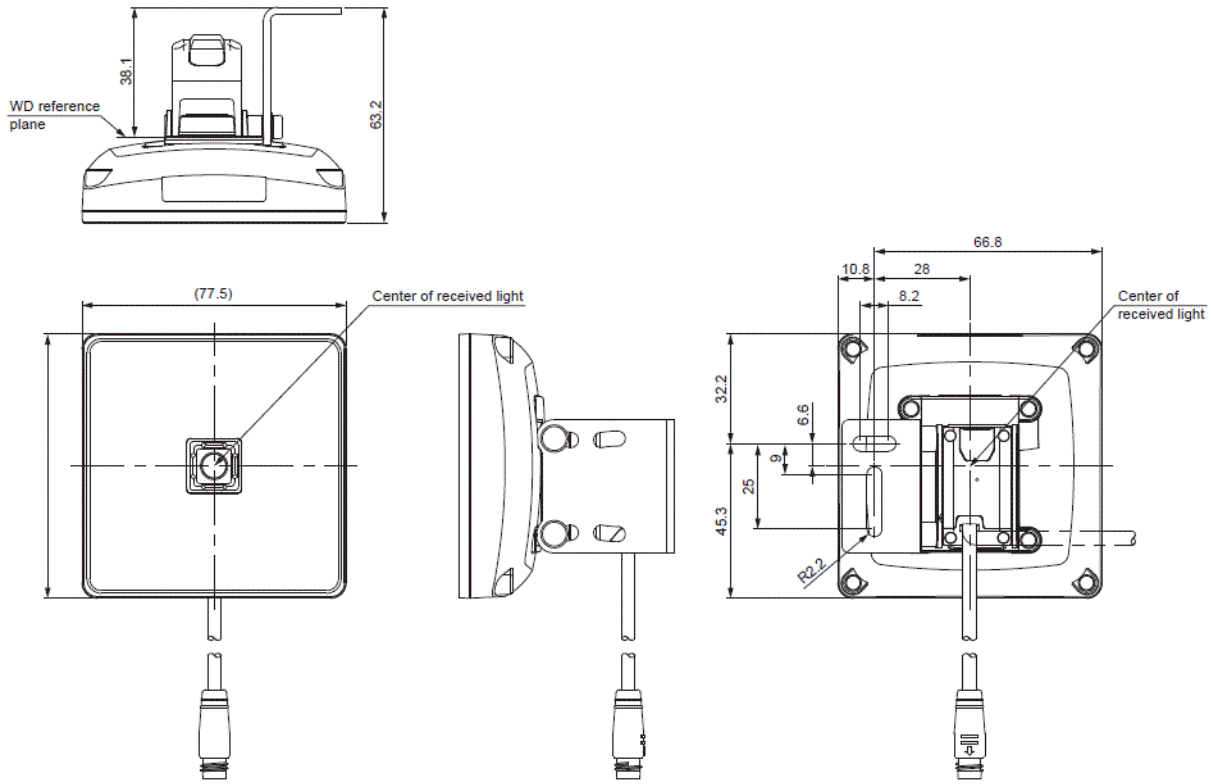
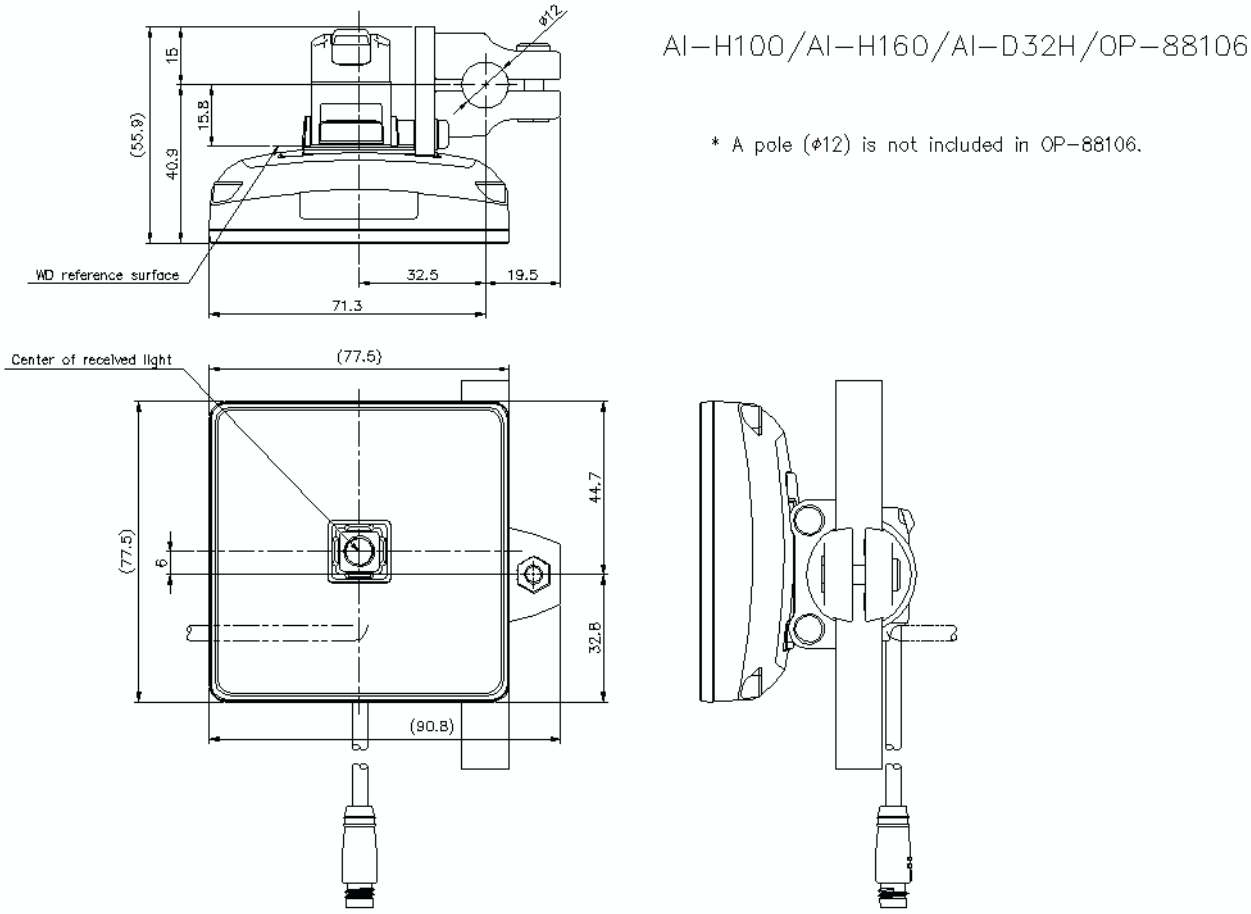
aih_d32h_88106_dimension_01.gif