AI-B160

Built-in Amplifier Model: 160mm

*Please note that accessories depicted in the image are for illustrative purposes only and may not be included with the product.

Specifications

Model		AI-B160
Installation Distance		140 to 180 mm 5.51 to 7.09"
Detection Area	1X Zoom to 4X Zoom	13 × 13 mm 0.51 × 0.51" to 52 × 52 mm 2.05 × 2.05"*1
	Digital Zoom	1X to 4X (17 steps) adjustment, zoom position adjustment*1
Light Receiving Element		BW CMOS
Transmitter	Light Source	Infrared LED (850 nm)
	Lighting Method	Pulse lighting
Detection Modes		Presence check mode / Difference check mode / Feeder mode
Response Time		Switchable between 3 ms/10 ms/20 ms/50 ms/100 ms
Timer		OFF/Off-delay/On-delay/One-shot
Bank Function		Bank slots: Up to 2
Other Functions		Filter, orientation detection, anti-blur, hysteresis, mutual interference prevention, indicator LED color change, screen display orientation, statistics display, failure hold display, key lock function, I/O test
Display Panel		Organic LED (OLED) display
Languages		Japanese/English/Chinese (Simplified)
Indicators	Main Indicator	1 (green/red/orange)
	I/O Indicators	2 indicators (red): OUT1/OUT2 or IN
Input	Type	Non-voltage input/voltage input can be switched Non-voltage input: ON voltage 2 V or lower, OFF current 0.1 mA or lower, ON current 2 mA or lower (short circuit) Voltage input: Maximum input rating 30 V, ON current 18 V or higher, OFF current 0.1 mA or lower, ON current 2 mA or lower (at 30 V)
	Number of Inputs	1: IN or no input*2
	Functions	Assignable functions: Bank/Hold (level)/Hold (edge)/Reset/External calibration/ Interference prevention/Light off
Output	Type	Open collector output: Can be switched between NPN/PNP and N.O./N.C. Maximum rating: 30 V 50 mA, remaining voltage 2 V or lower
	Number of Inputs	1: OUT1 or 2: OUT1/OUT2*2
	Functions	Assignable functions for OUT2: Error output/Judgment output 2/Interference prevention output (sync-output)
Communication Functions		IO-Link: Specification v. 1.1 (1.0)/COM2 (38.4 kbps)
Rating	Power voltage	20 to 30 VDC, including Ripple (P-P) 10 %
	Current consumption	0.3 A or less (power voltage at 20 V, excluding the output load)
Environmental resistance	Enclosure rating	IP67*3
	Ambient temperature	-10 to +50 °C 14 to 122 °F (No freezing)
	Relative humidity	35 to 85 % RH (No condensation)

ПРОМЭЛЕКТРОНИКА / sales@prom-elec.com

	Vibration resistance	10 to 55 Hz, Double amplitude 1.5 mm 0.06", 2 hours in each of the X, Y, and Z directions
	Shock resistance	500 m/s², 3 times in each of 6 directions
Materials		Main unit case: Zinc die-cast/PBT; Front cover: Acrylic (hard coating); Operation indicator: TPU; Button: POM; Display sheet: PET; Polarizing filter body: POM
Weight		Approx. 120 g (including polarized filter)

*1 When positioned in the midpoint of the installation distance range.
*2 Used with OUT2 or IN assigned to I/O line (white line or 2nd pin of M12 connector).
*3 Except when polarized filters or dome filters are mounted.

Dimensions

* Download CAD file or product manual for larger image/text and more detail.

ai-b160(l)_dimension_01.gif

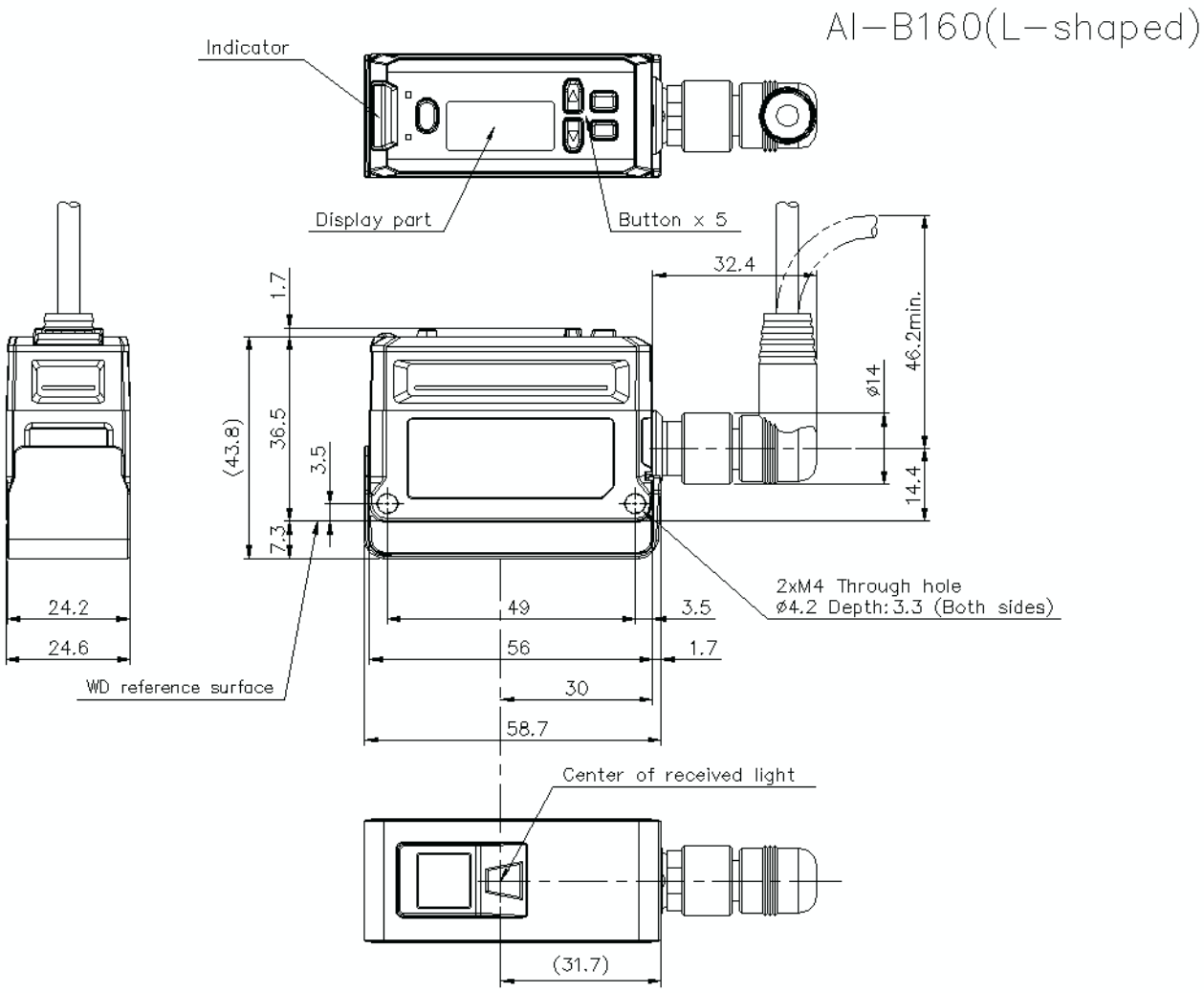

ai-b160_dimension_01.gif

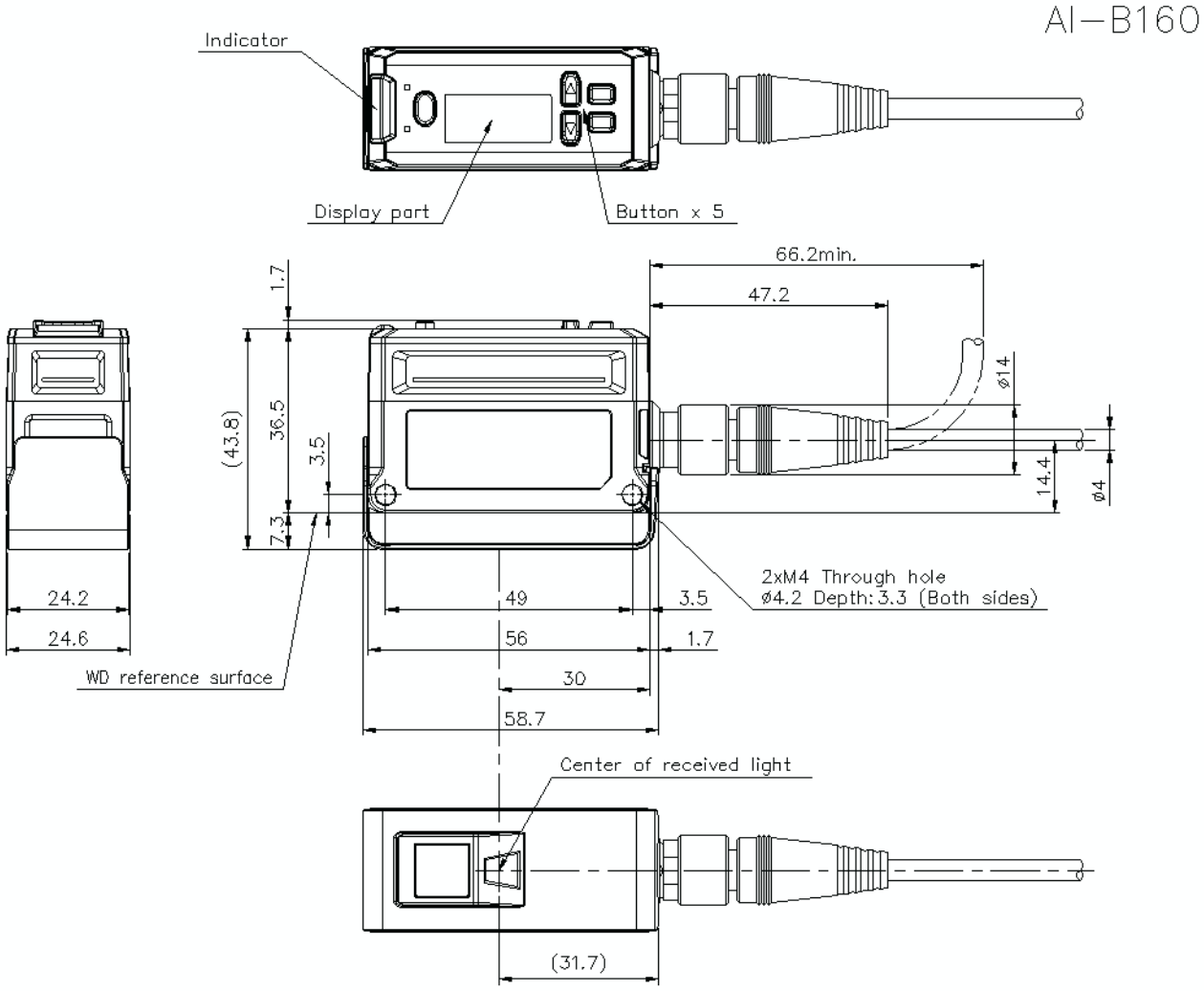

aib050-160_d16b_dimension_01.gif

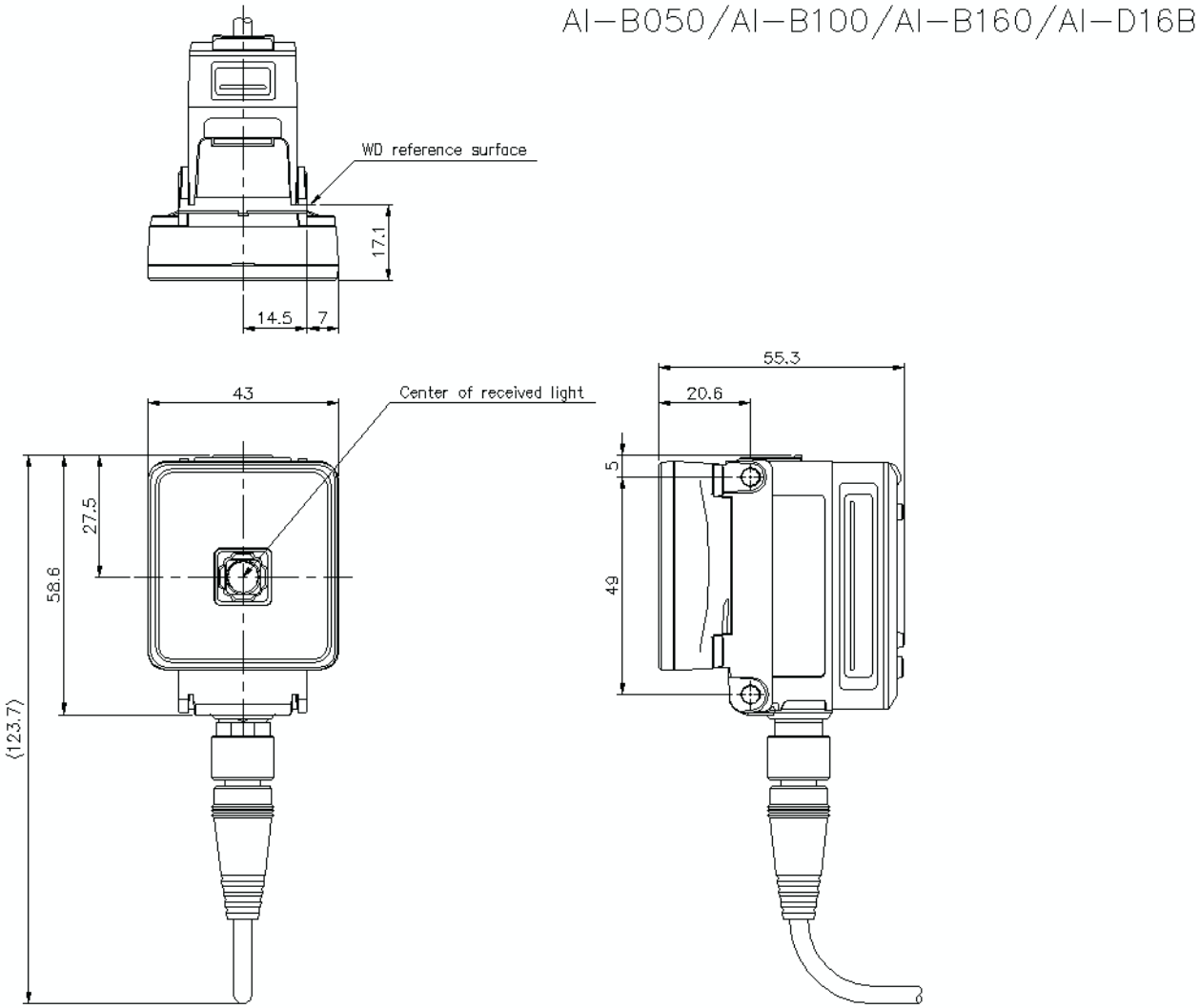

aib100_160_d32b_dimension_01.gif

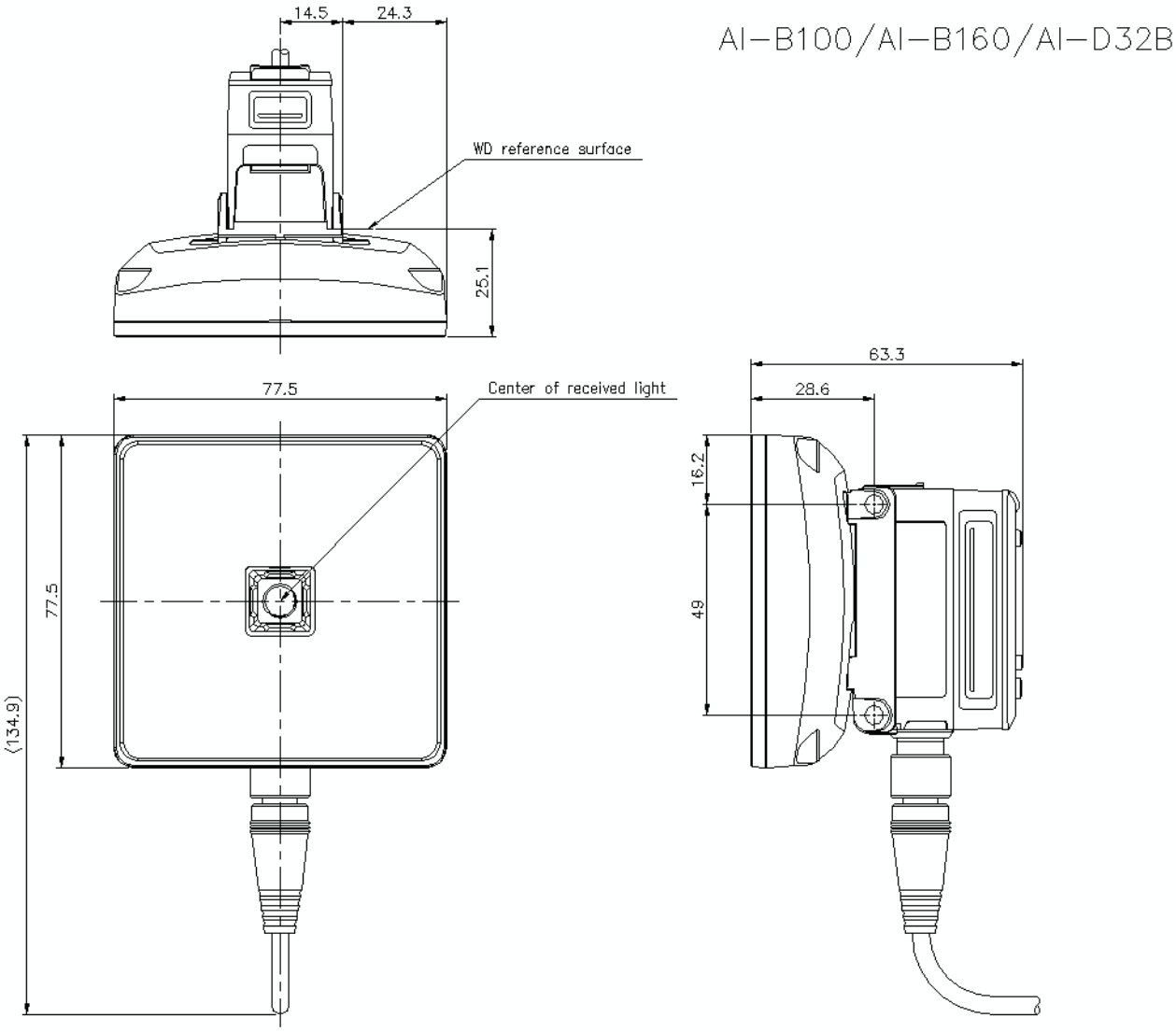

aib160_op88114_dimension_01.gif

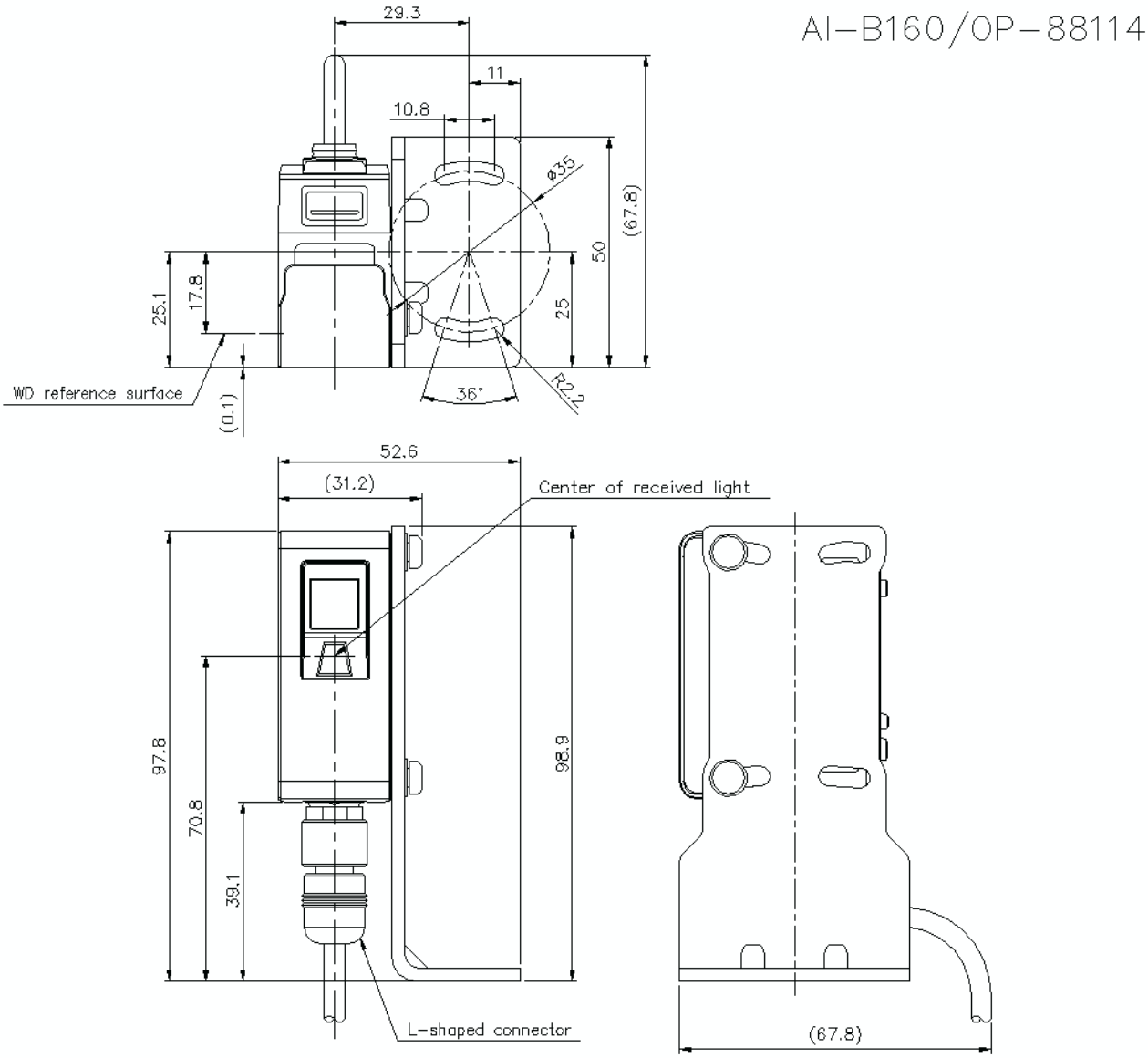

aib160_op88115_dimension_01.gif

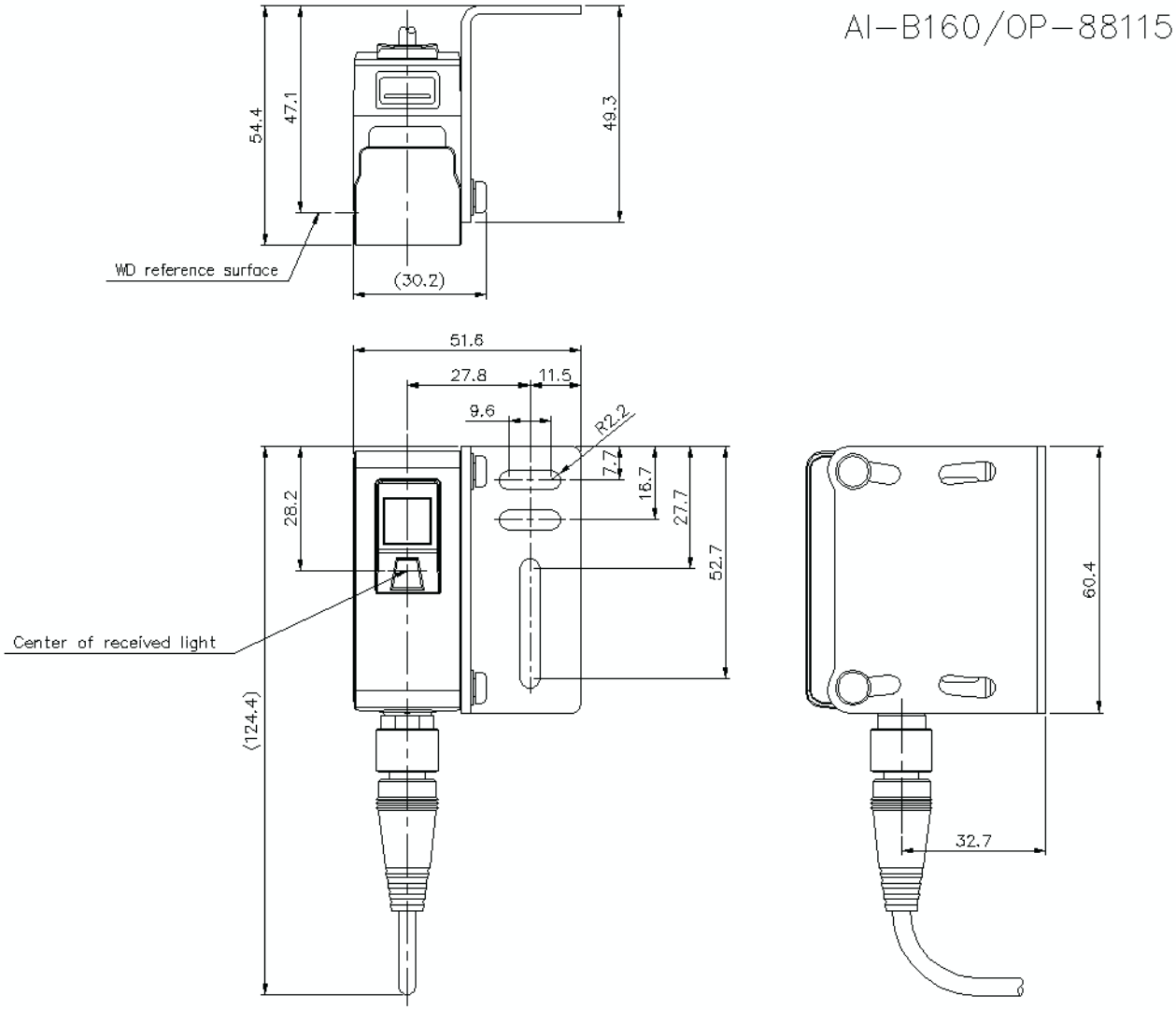

aib160_op88116_dimension_01.gif

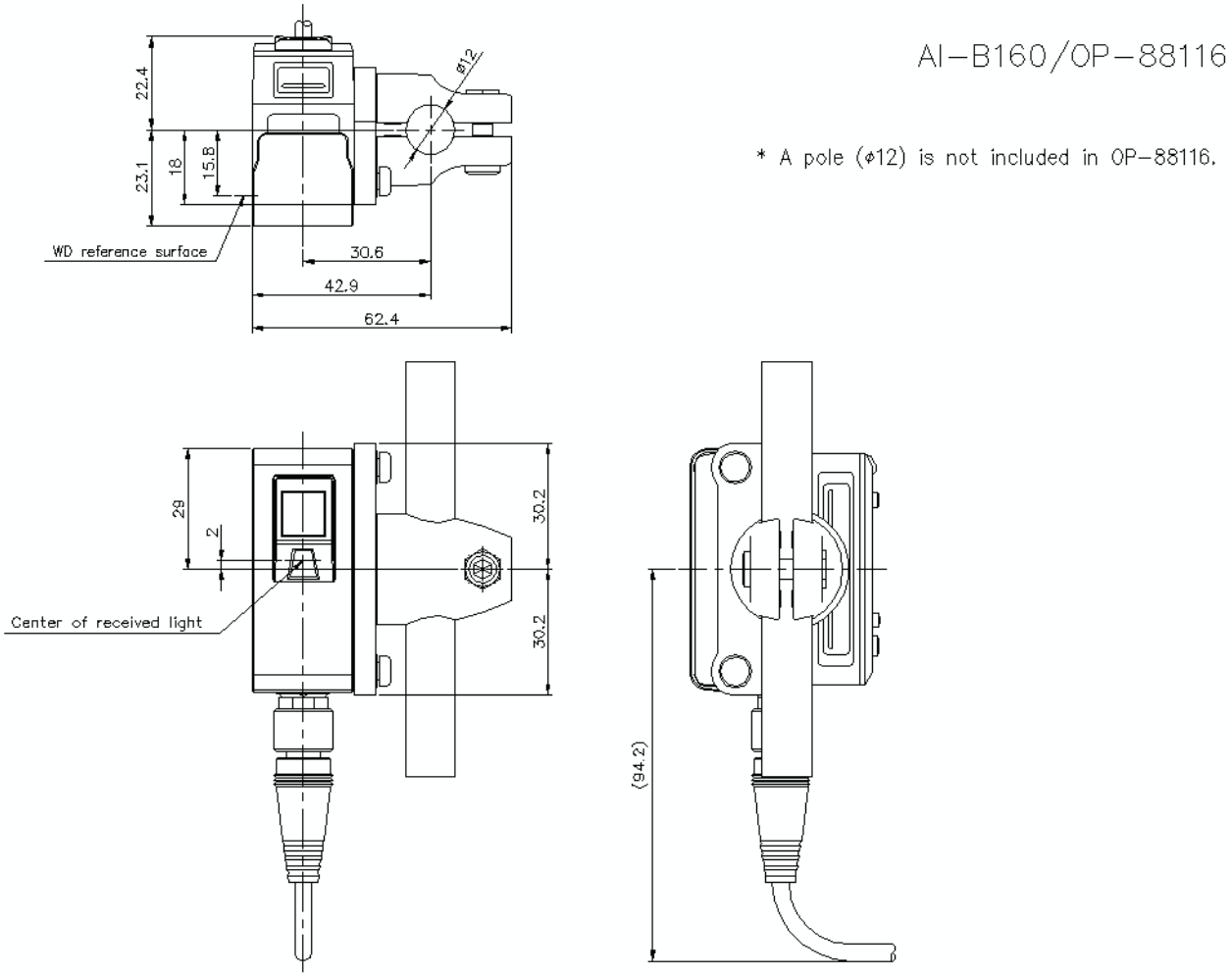

aib_d16b_88114_dimension_01.gif

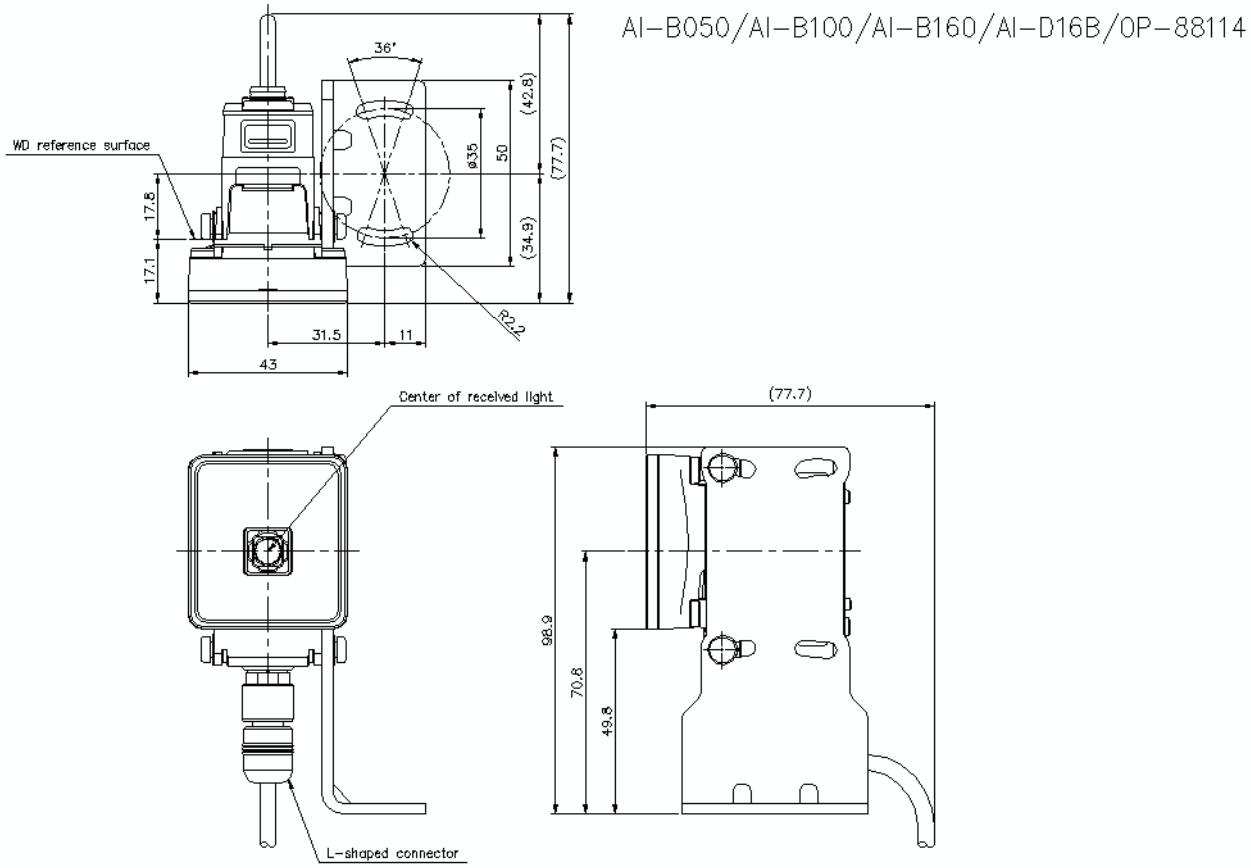

aib_d16b_88115_dimension_01.gif

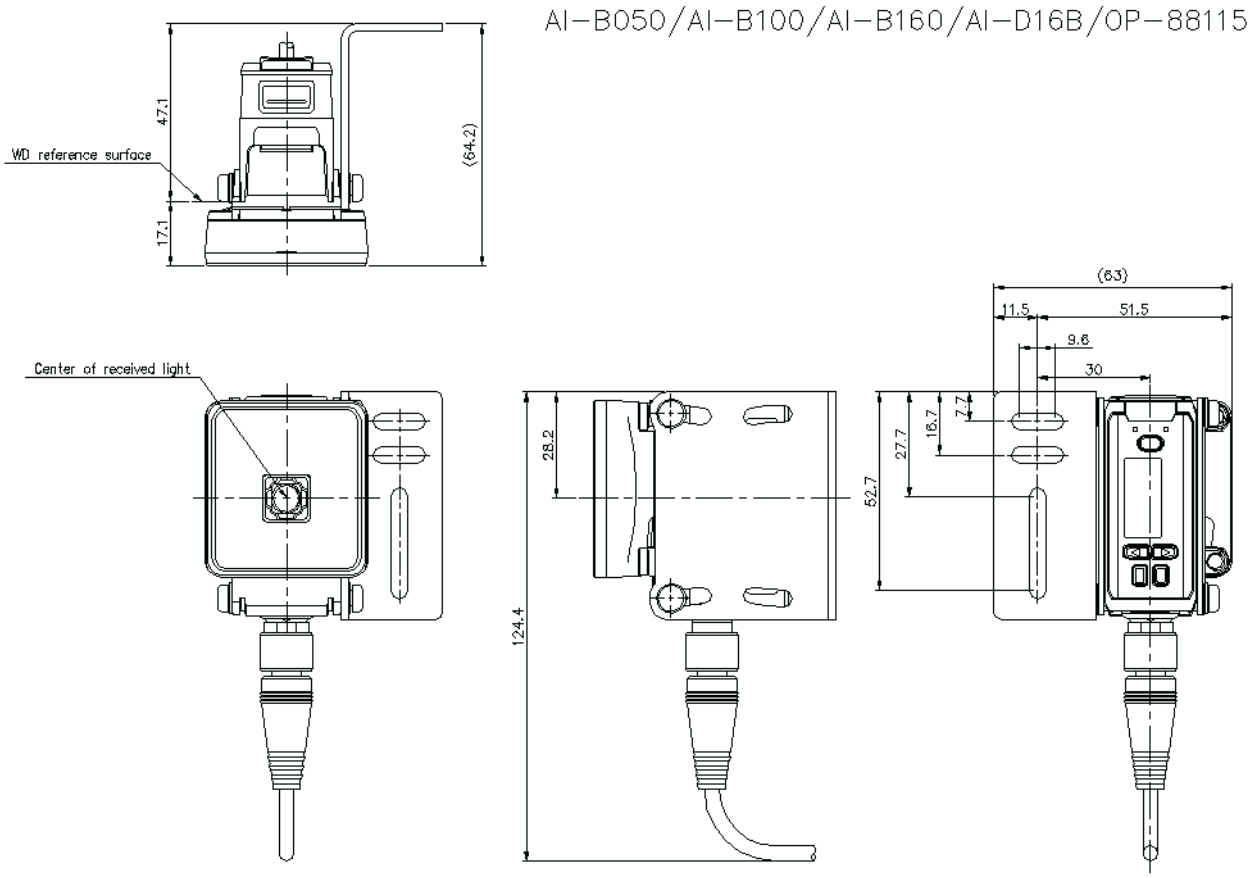

aib_d16b_88116_dimension_01.gif

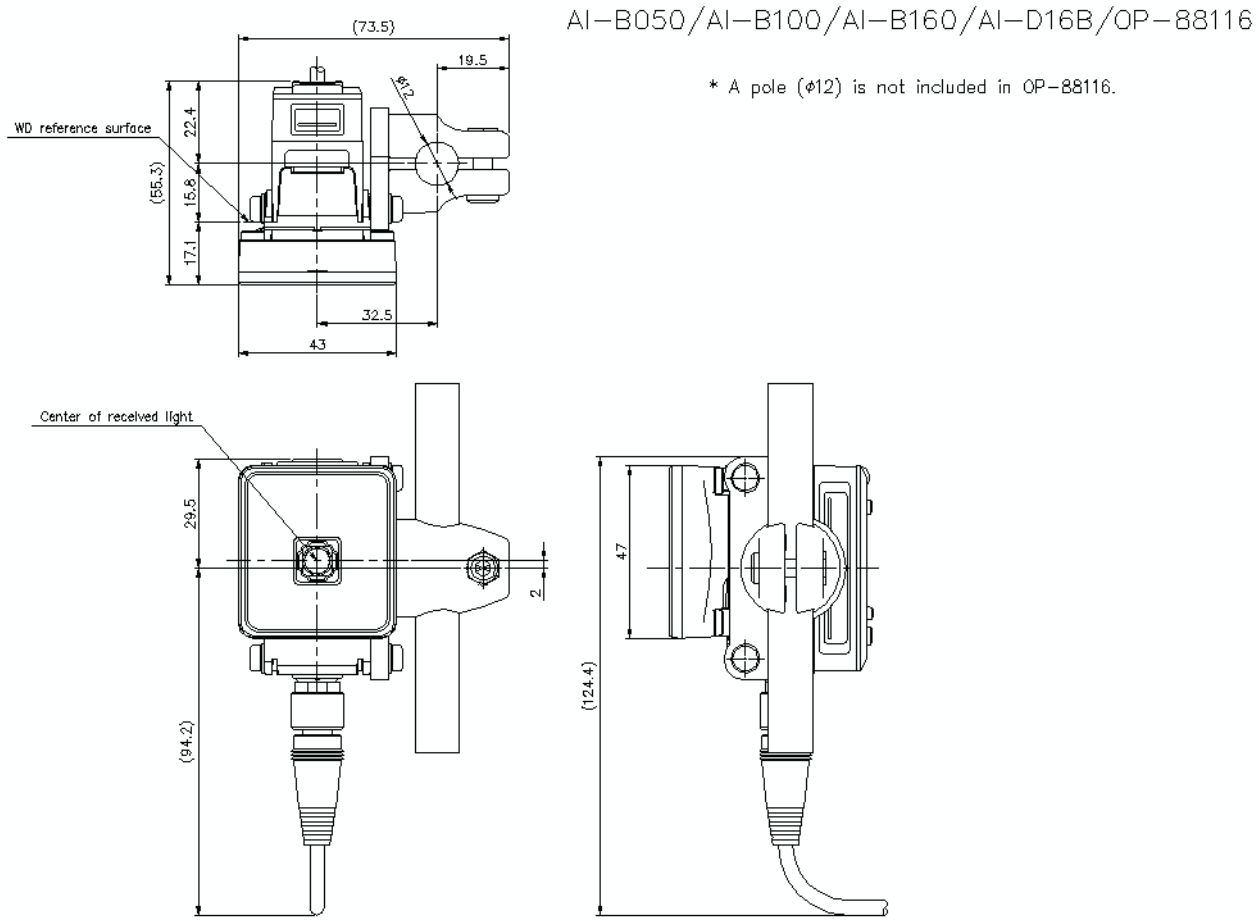

aib_d32b_88114_dimension_01.gif

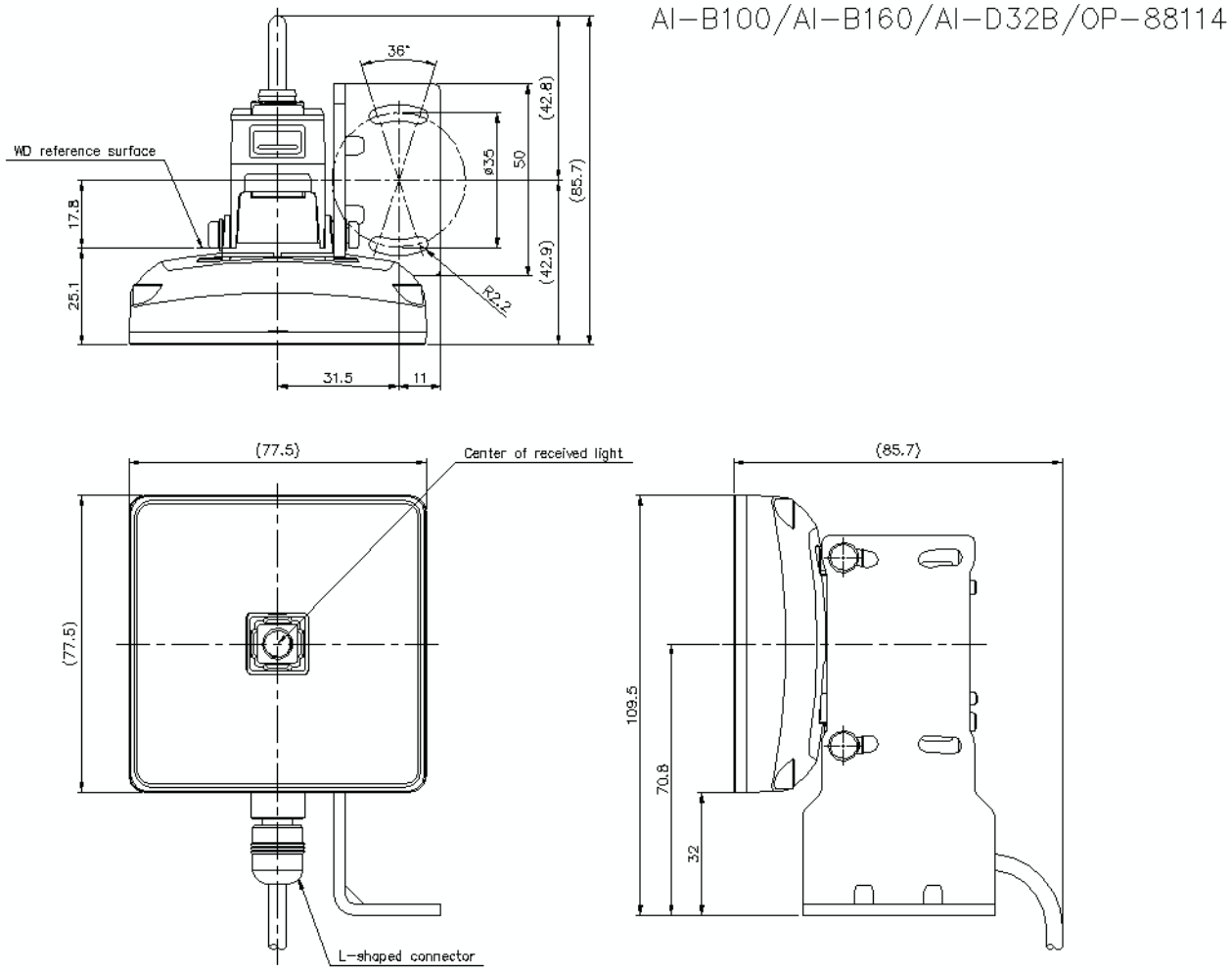

aib_d32b_88115_dimension_01.gif

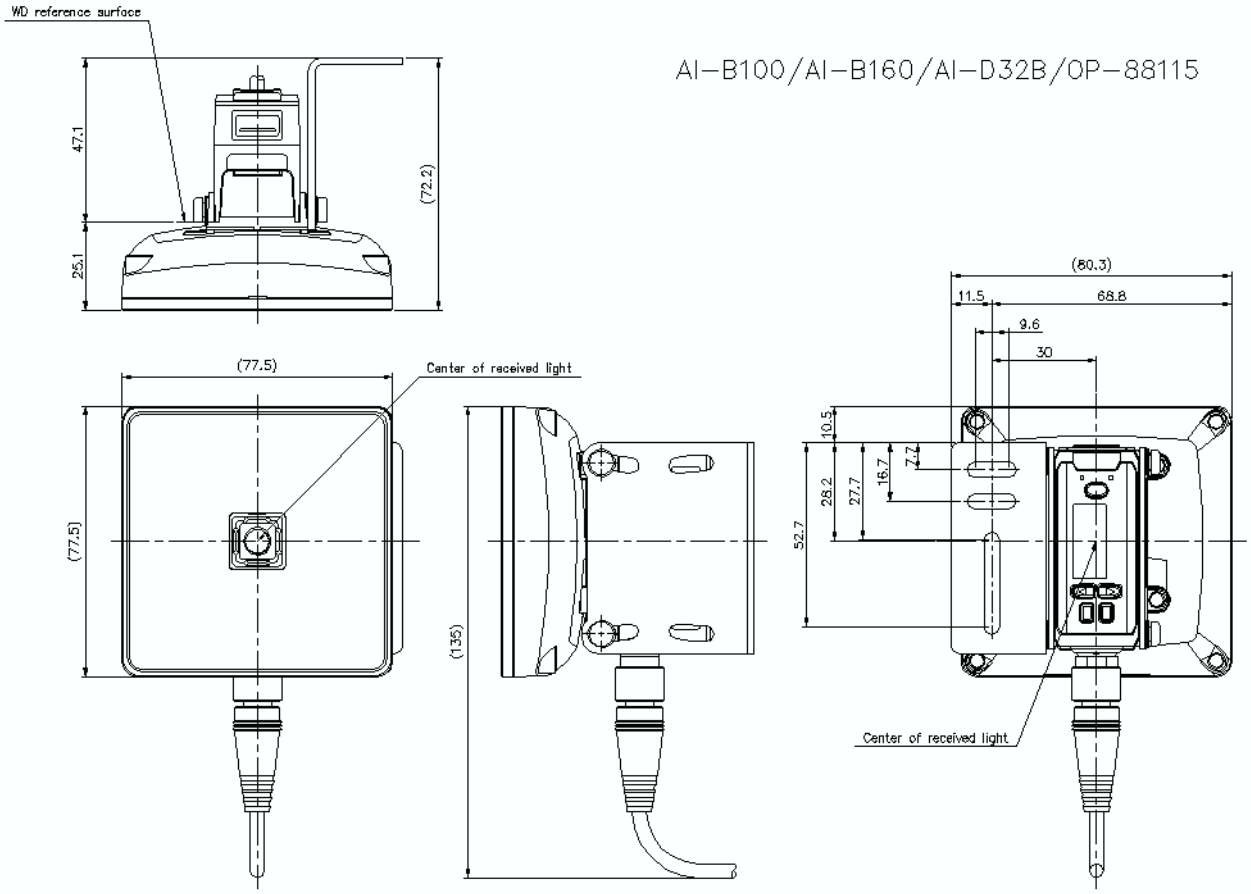
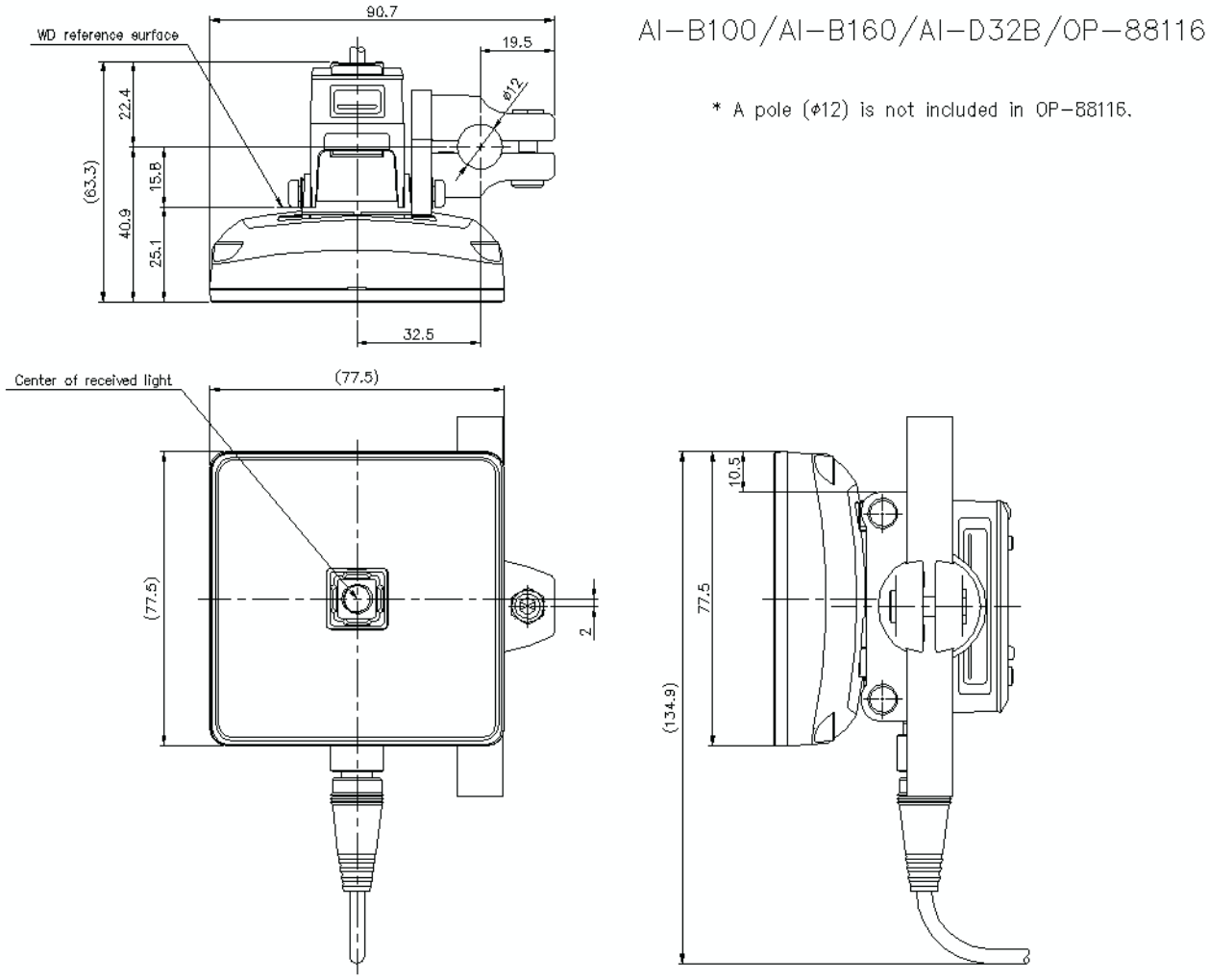
aib_d32b_88116_dimension_01.gif