E20910

Mounting set for reflectors

SYSTEM COMPONENT REFL BOLT

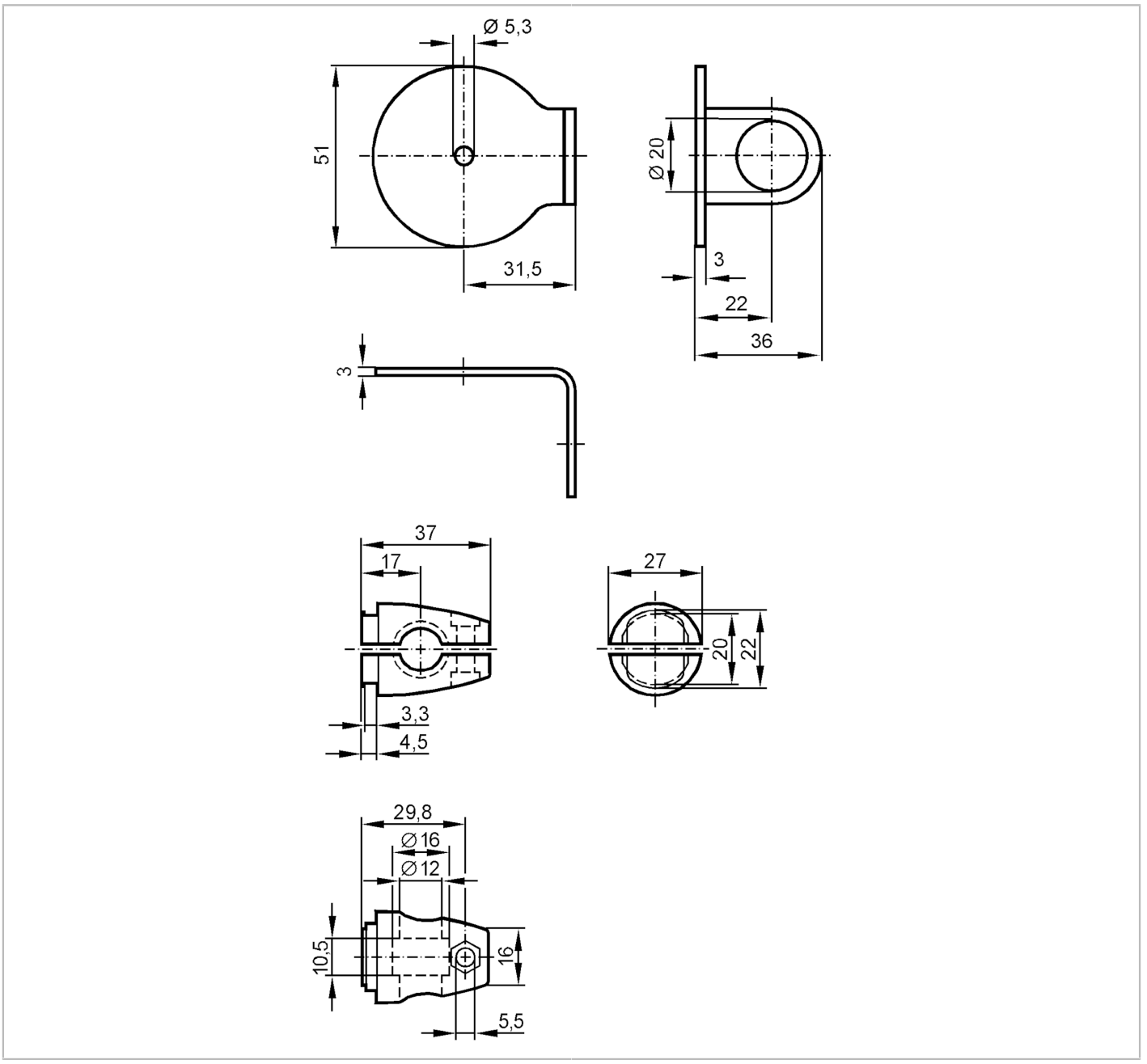

Application		
Design		clamp mounting, for reflector, Ø 50 mm
Mechanical data		
Weight	[g]	220.5
Type of mounting		free-standing; (M10)
Materials		fixture: stainless steel (316Ti/1.4571); Clamp: diecast zinc; head cap screw: stainless steel; washers: stainless steel; Nuts: stainless steel
Accessories		
Items supplied		head cap screw: 1 x (M10 x 55 mm)
		washers: 2 x (Ø 10,5 mm)
		Nuts: 2 x (M10)

E20910

Mounting set for reflectors

SYSTEM COMPONENT REFL BOLT

Remarks	
Pack quantity	1 pcs.