AC1212

AS-Interface power supply

PowerSupply 230VAC 2x4A

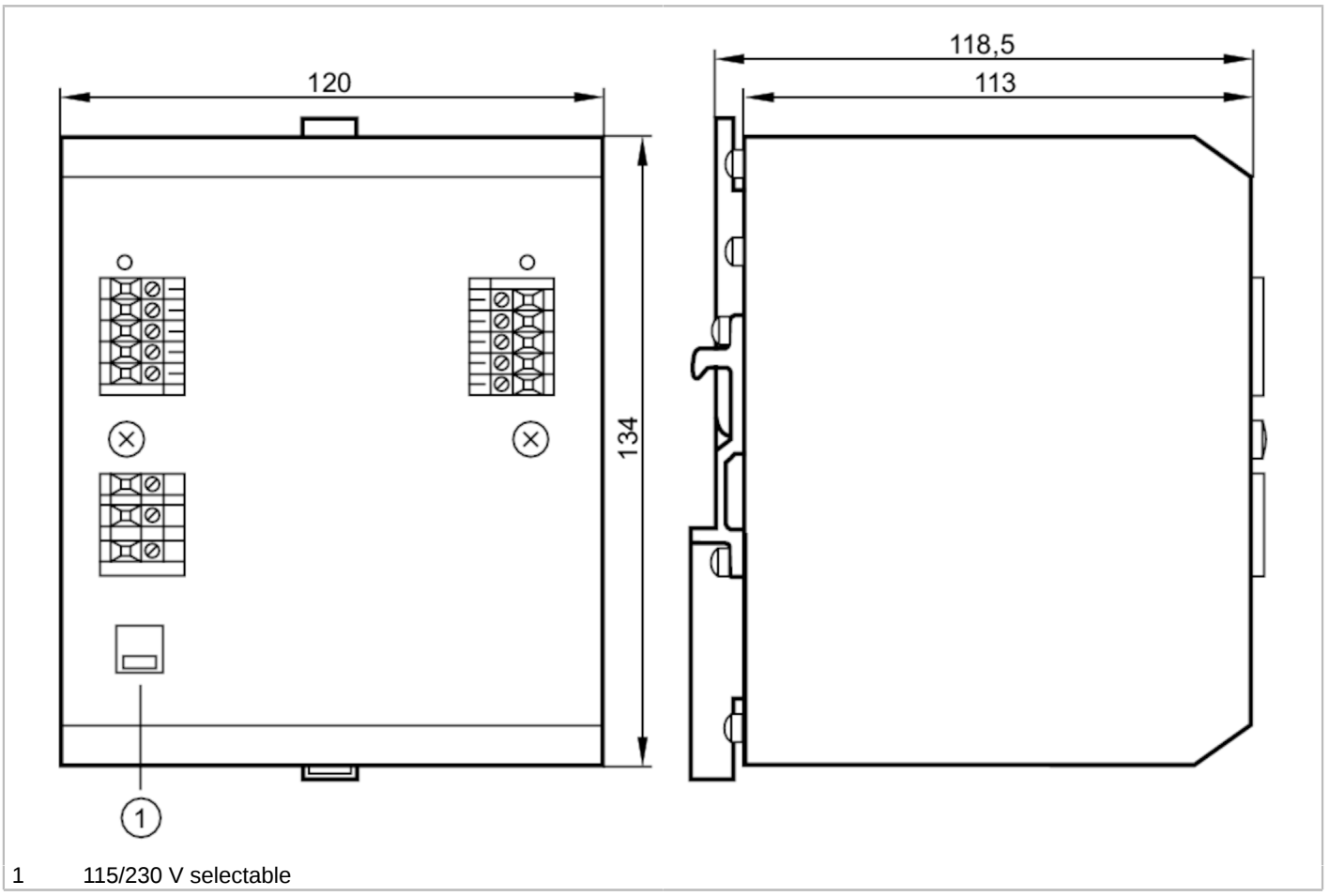

1 115/230 V selectable

Application		
Design		housing for DIN rail mounting
Electrical data		
Nominal voltage AC	[V]	110 / 230
Nominal frequency AC	[Hz]	47...63
Input voltage range AC	[V]	88...132 / 184...264
Max. power-on delay time	[ms]	500
Output voltage AS-i	[V]	29.5...31.6; (to PELV)
Number of output circuits		2
Output current AS-i	[A]	4
Max. residual ripple	[mV]	50
External input protection		> 10 A
Fuse	[A]	8; (not accessible)
Derating	[W/K]	1 (60...70 °C)
Power loss (nominal voltage 230 V AC / 50 Hz)	[W]	30
Power loss in open-circuit operation	[W]	4
Integrated data decoupling		yes

AC1212

AS-Interface power supply

PowerSupply 230VAC 2x4A

Outputs			
Short-circuit protection		yes	
Overload protection		yes	
Parallel connection of outputs possible		no	
Series connection of outputs possible		no	
Operating conditions			
Ambient temperature	[°C]	-10...60	
Protection		IP 20	
Tests / approvals			
EMC		EN 60950/A2 1993	
		EN 50081-1	
		EN 61000-6-2	
MTTF	[years]	23	
AS-i classification			
AS-i certificate		21901	
Mechanical data			
Weight	[g]	1263.5	
Housing		rectangular	
Type of mounting		mounting on DIN rail; (TH35 (EN 60715))	
Dimensions	[mm]	134 x 120 x 118.5	
Materials		aluminium	
Displays / operating elements			
Display		function	2 x LED, green
Remarks			
Pack quantity		1 pcs.	

AC1212

AS-Interface power supply

PowerSupply 230VAC 2x4A

Electrical connection

terminals: ...2.5 mm²

Connection

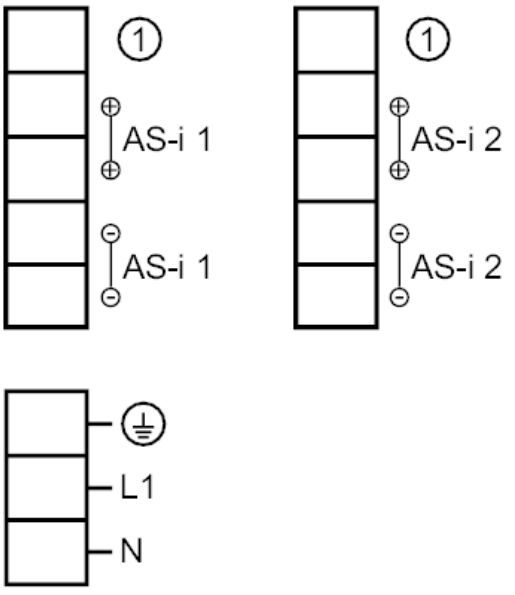

1	screen