Automatic burner control units for continuous operation IFD 450, IFD 454

Technical Information · GB
6 Edition 01.21

- For directly ignited burners of unlimited capacity continuous operation pursuant to EN 746-2
- Continuous self-testing for faults
- IFD 450 includes immediate fault lock-out following flame failure
- IFD 454 includes restart following flame failure
- Flame control with UV sensor or ionization sensor
- Multi-flame control with an additional flame detector
- Checking that the gas valve is closed upon start-up

www.kromschroeder.com

ПРОМЭЛЕКТРОНИКА / sales@prom-elec.com

Contents

Automatic burner control units for continuous operation IFD 450, IFD 454 . . . 1
Contents . . . 2
1 Application . . . 4
1.1 Application examples . . . 6
1.1.1 Two-stage-controlled burner . . . 6
1.1.2 Modulating-controlled burner . . . 7
1.1.3 Modulating-controlled burner with UV control for continuous operation . . . 8
2 Certification . . . 9
2.1 Approval for Russia . . . 9
3 Function . . . 10
3.1 Connection diagrams . . . 10
3.1.1 IFD 450, 454 with ionization control in double-electrode operation . . . 10
3.1.2 IFD 450, 454 with ionisation control in single-electrode operation . . . 11
3.1.3 IFD 450, 454 with UVD control . . . 12
3.1.4 IFD 450, 454 with UVS control . . . 13
3.2 Program sequence (summary) . . . 14
3.3 Behaviour during start-up . . . 15
3.3.1 Normal start-up . . . 15
3.3.2 Start-up without flame signal . . . 15
3.3.3 Flame simulation during start-up . . . 15
3.3.4 Normal start-up with multi-flame control . . . 16
3.3.5 Flame simulation with multi-flame control . . . 16
3.3.6 Error: "Closed position of gas valve" . . . 16
3.4 Behaviour during operation . . . 17
3.4.1 IFD 450: immediate fault lock-out . . . 17
3.4.2 IFD 454: restart . . . 17
3.5 Behaviour following a shut-down of the burner . . . 18
3.5.1 Normal shut-down . . . 18
3.5.2 Flame simulation following shut-down . . . 18
3.5.3 Flame simulation with multi-flame control . . . 18
3.5.4 Error: "Closed position of gas valve" . . . 18
3.6 Animation . . . 19
3.7 Program status and fault messages . . . 20
3.7.1 Reading off the flame signal . . . 21
4 Replacement possiblities . . . 22
5 Selection . . . 23
5.1 Determining the safety time t_{SA} . . . 23
5.2 Selection table . . . 24
5.2.1 Type code . . . 24
6 Project planning information . . . 25
6.1 Cable selection . . . 25
6.1.1 Ionization cable and ignition cable . . . 25
6.1.2 UV cable . . . 25
6.2 Star electrodes . . . 25
6.3 Purge . . . 25
6.4 Emergency stop in the event of fire or electric shock 26
6.5 Emergency stop triggered by safety interlock . . . 26
6.6 Parallel reset . . . 26
6.7 Remote reset . . . 26
6.8 Wiring . . . 26
6.9 Note on EC type-examination . . . 26
6.10 Installation of solenoid valves for gas . . . 26
6.11 Flame control . . . 27
6.11.1 ... with ionization sensor . . . 27
6.11.2 ... with UV sensor UVD 1 . . . 27
6.11.3 Reading the flame signal with an external µ-ammeter . . . 27
7 Accessories . . . 28
7.1 High-voltage cable . . . 28
7.2 Radio interference suppressed electrode adapters . . . 28
7.3 µ-ammeter FSM1 . . . 28

▼ = To be continued

8 Technical data 29
8.1 Operating controls 30
8.2 Installation 30
9 Maintenance cycles 31
10 Legend 31
11 Glossary 32
11.1 Waiting time t_W 32
11.2 Safety time on start-up t_{SA} 32
11.3 Ignition time t_Z 32
11.4 Flame simulation/Flame simulation delay time t_{LV} 32
11.5 Safety time during operation t_{SB} 32
11.6 Flame signal 33
11.7 Flame detector 33
11.8 Fault lock-out 33
11.9 Safety interlock (Limits) 33
11.10 Pilot gas valve V1 33
11.11 Main valve V2 33
11.12 Continuous operation 33

1 Application

Automatic burner control units for continuous operation IFD 450, IFD 454

IFD 450, IFD 454

The automatic burner control units for continuous operation IFD 450, IFD 454 ignite and monitor gas burners. As a result of their fully electronic design they react quickly to various process requirements and are therefore also suitable for frequent cycling operation.

They can be used for directly ignited industrial burners of unlimited capacity. The burners may be modulating or stage-controlled.

The program status and the level of the flame signal can be read directly from the unit.

IFD 450

Immediate fault lock-out following flame failure during operation.

IFD 454

Automatic restart following flame failure during operation.

Intermittent shuttle kiln in the ceramics industry

Roller hearth kiln

Intermittent shuttle kiln

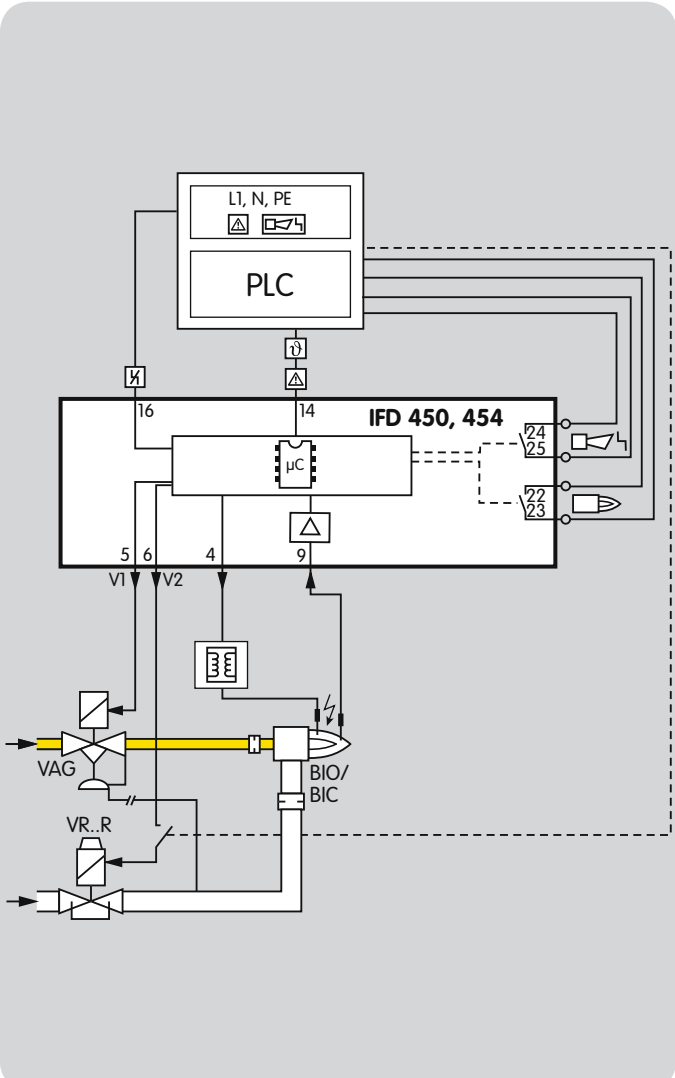

1.1 Application examples

1.1.1 Two-stage-controlled burner

Control: ON/OFF or ON/HIGH/LOW/OFF

The burner BIO/BIC starts at low-fire rate. Once the normal operating state is reached, the automatic burner control unit for continuous operation IFD 454 or IFD 450 will release control.

The PLC can now pulse the air solenoid valve VR..R in order to control the capacity between high and low fire.

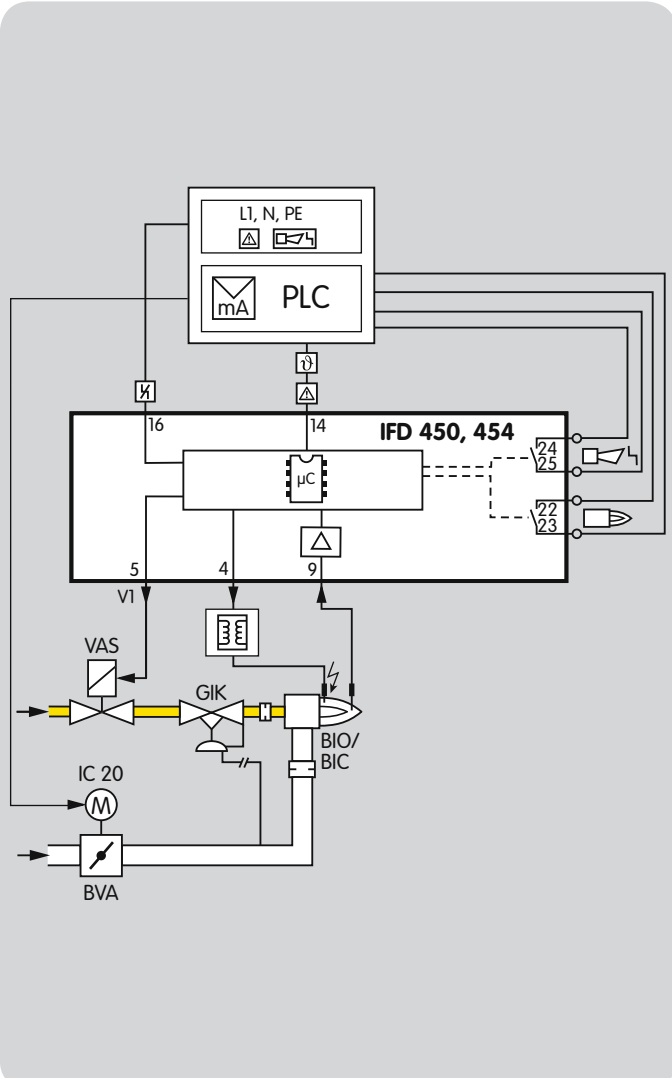

1.1.2 Modulating-controlled burner

Control: ON/OFF/continuous

The PLC uses the actuator IC 20 to move the air butterfly valve BVA to ignition position.

The burner BIO/BIC starts at low-fire rate. Once the normal operating state is reached, the PLC uses the actuator IC 20 and the air butterfly valve BVA to control the burner capacity.

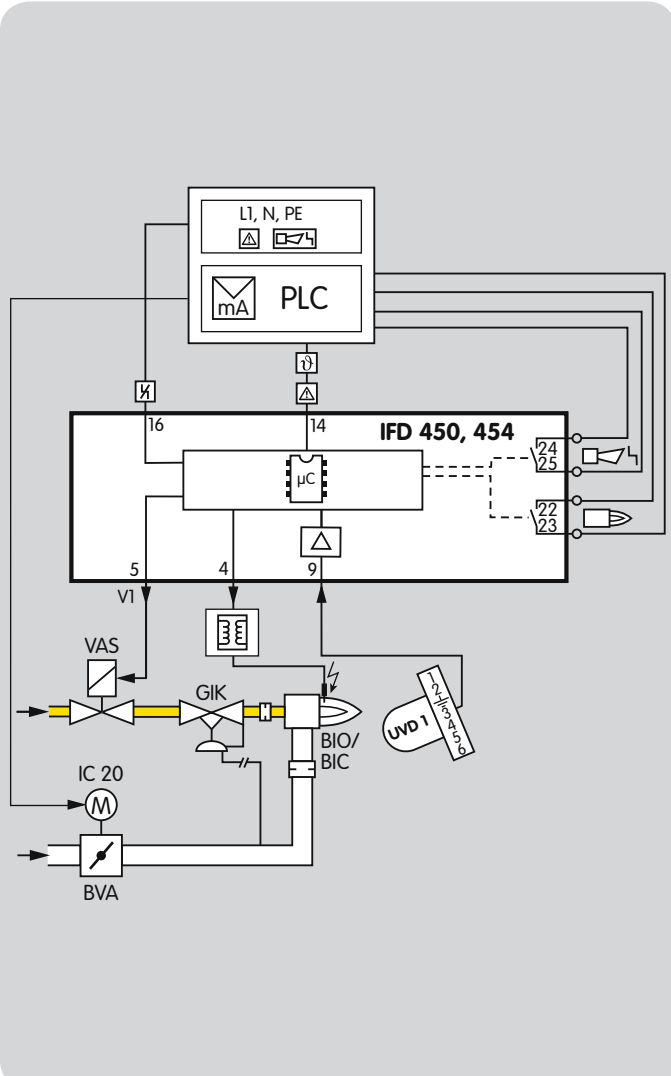

1.1.3 Modulating-controlled burner with UV control for continuous operation

Control: ON/OFF/continuous

The PLC uses the actuator IC 20 to move the air butterfly valve BVA to ignition position. The burner BIO/BIC starts at low-fire rate.

The UV sensor for continuous operation UVD 1 is also connected in order to monitor the flame, see page 27 (... with UV sensor UVD 1). It notifies the automatic burner control unit for continuous operation IFD 454 or IFD 450 of the presence of a flame. Once the normal operating state is reached, the PLC uses the actuator IC 20 and the air butterfly valve BVA to control the burner capacity.

2 Certification

2.2 Approval for Russia

Certified by Gosstandart pursuant to GOST-TR.
Approved by Rostekhnadzor (RTN).

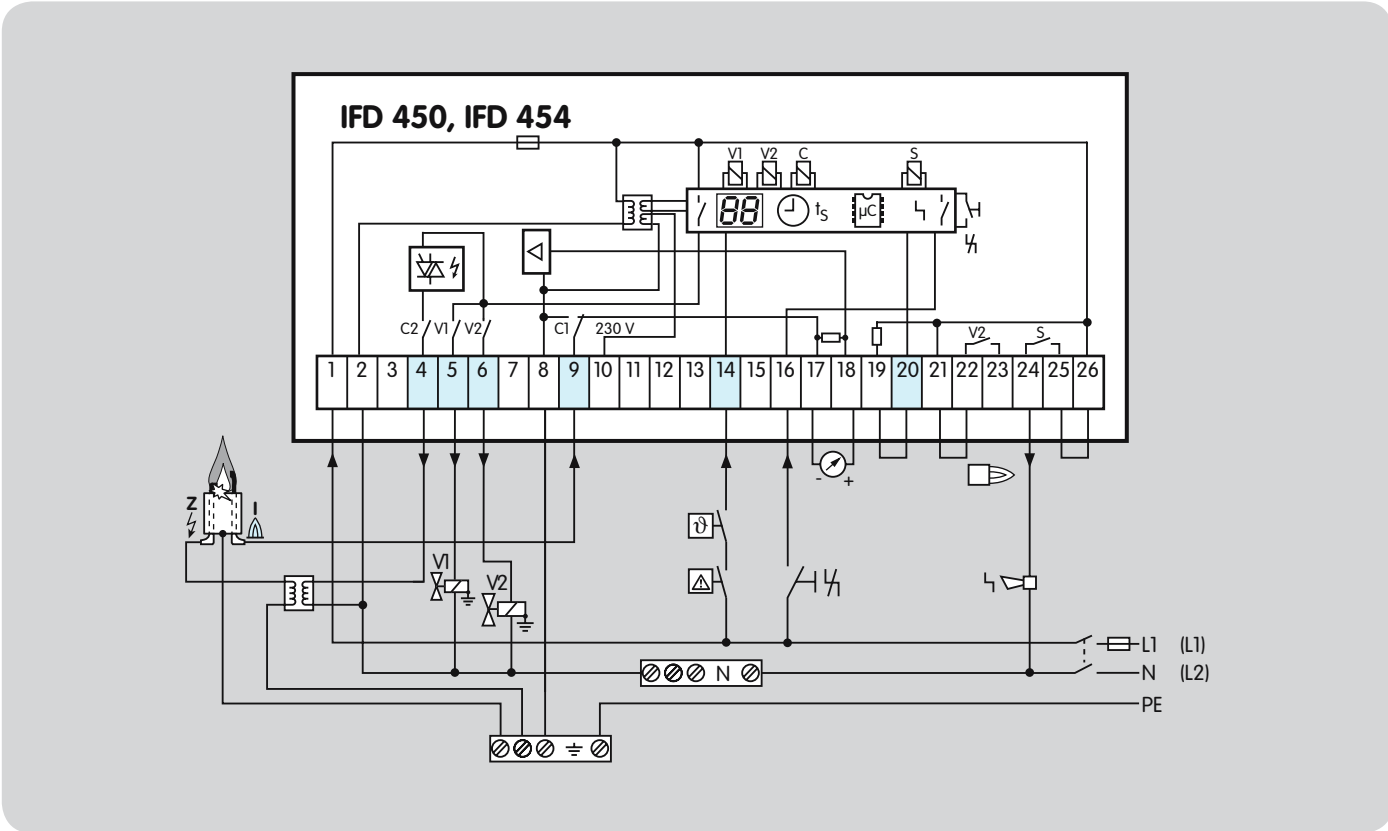

3 Function

3.1 Connection diagrams

3.1.1 IFD 450, 454 with ionization control in double-electrode operation

For cable selection and wiring, see page 25 (Project planning information).

For the explanation of symbols, see page 31 (Legend).

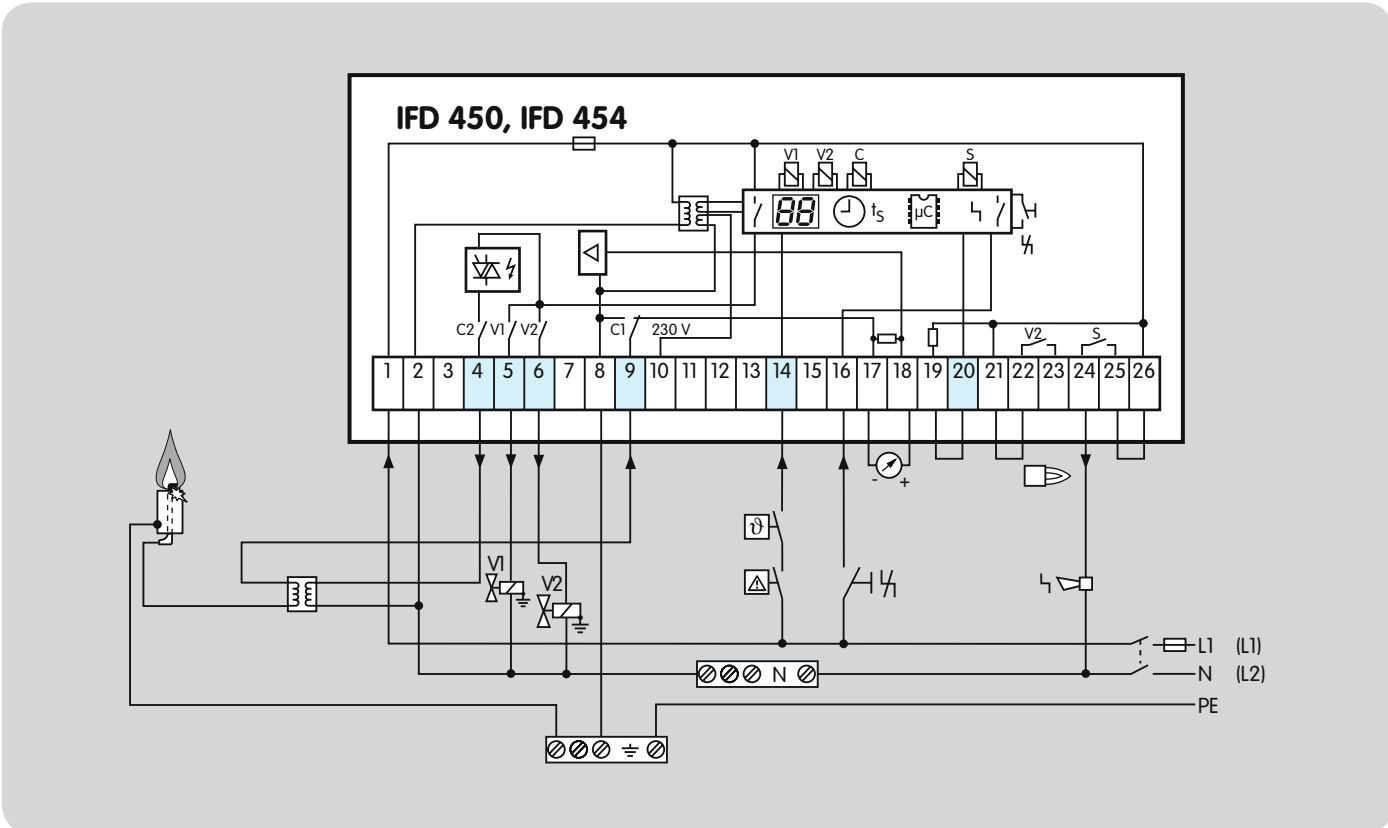

3.1.2 IFD 450, 454 with ionisation control in single-electrode operation

For cable selection and wiring, see page 25 (Project planning information).

For the explanation of symbols, see page 31 (Legend).

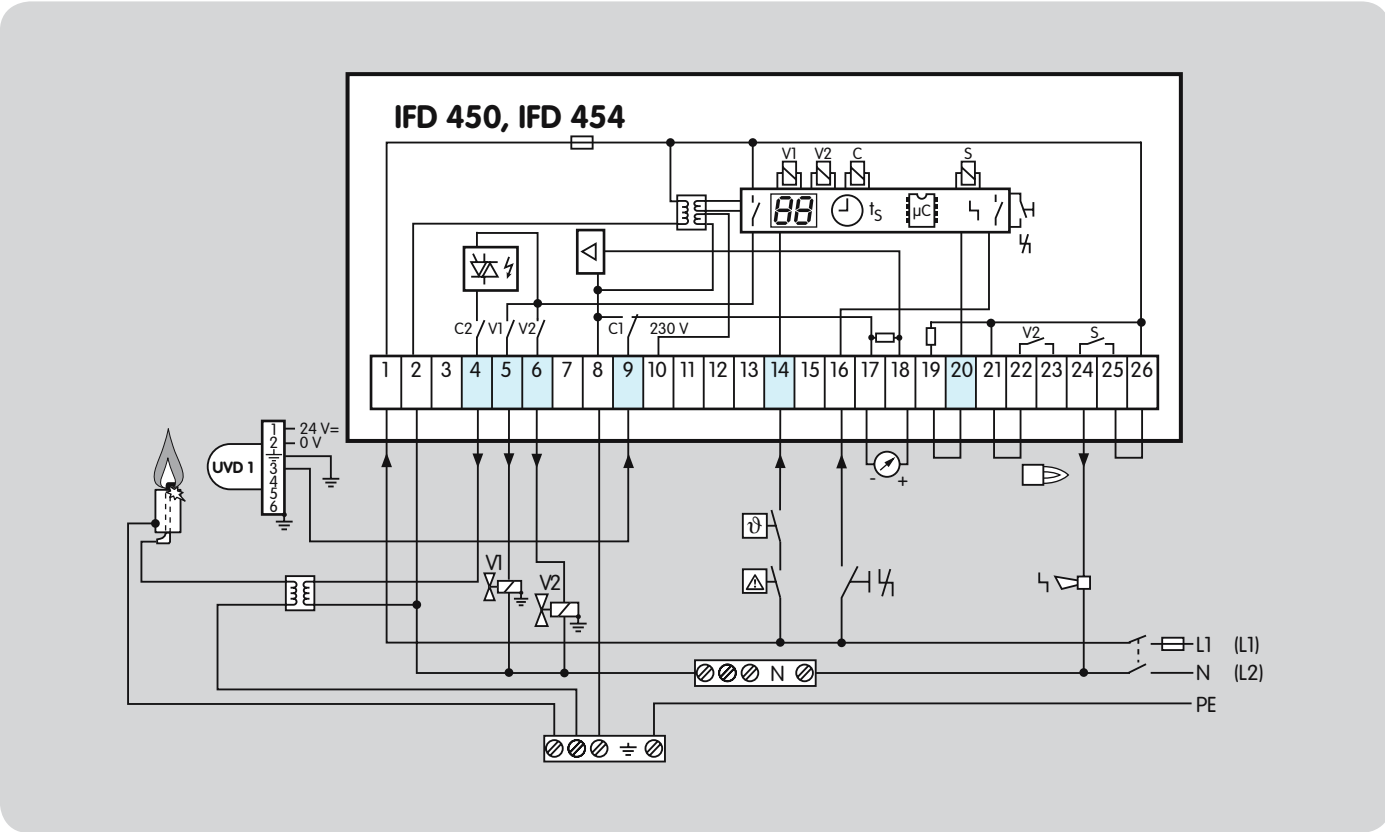

3.1.3 IFD 450, 454 with UVD control

For cable selection and wiring, see page 25 (Project planning information).

For the explanation of symbols, see page 31 (Legend).

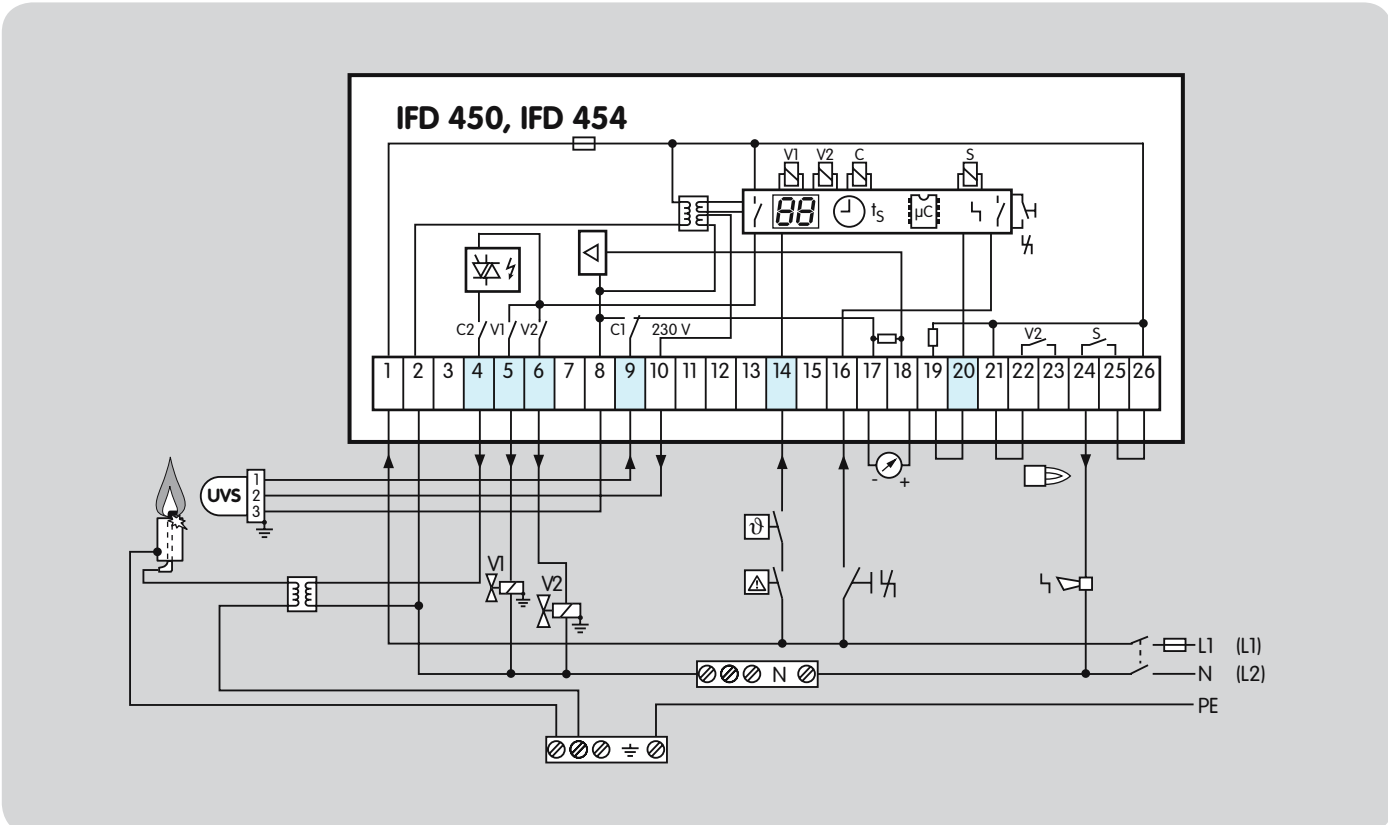

3.1.4 IFD 450, 454 with UVS control

In the case of UV control with UV sensor UVS, only intermittent operation is possible.

For cable selection and wiring, see page 25 (Project planning information).

For the explanation of symbols, see page 31 (Legend).

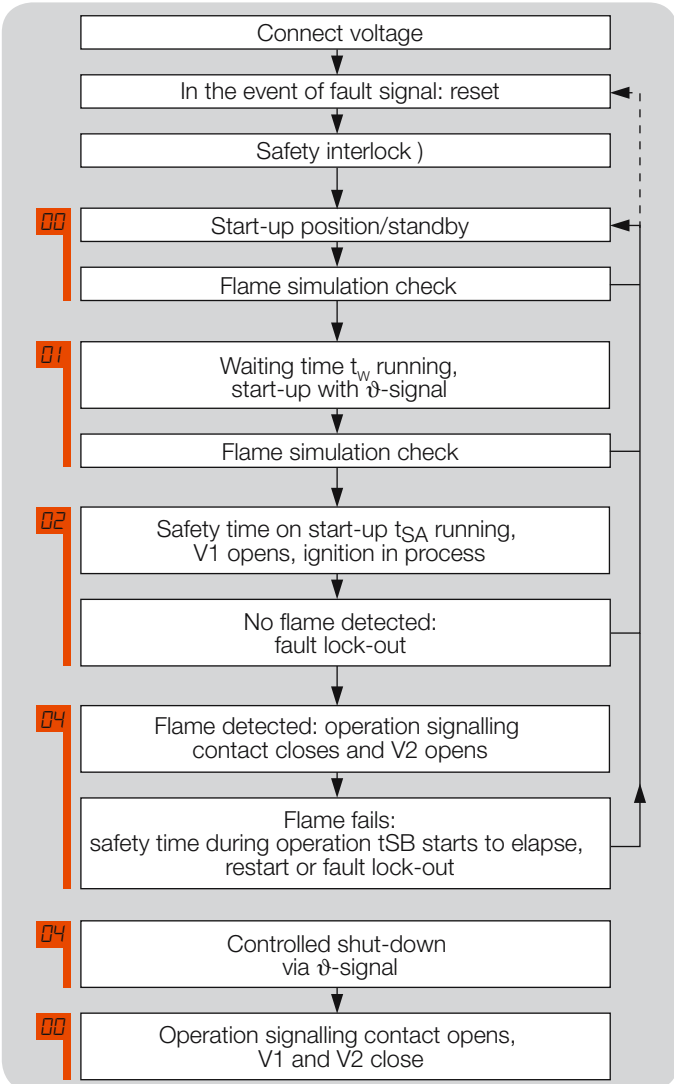

3.2 Program sequence (summary)

Normal start-up

If, after applying voltage, an "old" fault is still being signalled, it will be necessary to reset this first. The safety interlocks are closed, the IFD reverts to start-up position/standby 00 and conducts a self-test.

If it does not determine a malfunction of the internal electronic circuitry or of the flame sensor, the flame simulation check then commences. This takes place in start-up position during the waiting time tW 01 .

If no flame simulation is detected during that period, the safety time on start-up t_{SA} 02 then starts to elapse. Voltage is supplied to the pilot gas valve V1 and the ignition transformer. The burner starts. After the safety time on start-up t_{SA} 04 has elapsed, the operation signalling contact closes and the main valve V2 opens. This completes start-up.

Start-up without flame signal

If, after V1 02 has opened and the ignition has been activated, no flame is detected during the safety time on start-up t_{SA}, a fault lock-out will then occur.

Behaviour in the event of flame failure during operation

If the flame fails during operation, the IFD 450 will perform a fault lock-out within the safety time during operation t_{SB} and will close the valves.

If the flame fails during operation t_{SB}, the IFD 454 will close the valves and will restart the burner once. If the burner does not function, a fault lock-out occurs.

3.3 Behaviour during start-up

3.3.1 Normal start-up

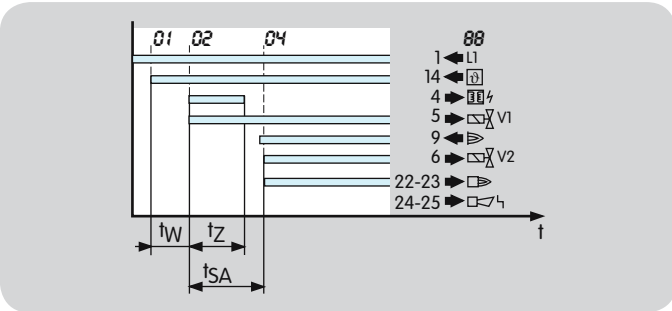

Once the start-up signal (ϑ) has been applied, the automatic burner control unit checks the burner for flame simulation during the waiting time t_W. If no flame simulation is detected during that period, the safety time on start-up t_{SA} [02] then starts to elapse (3, 5 or 10 s). This forms the minimum operating time of the automatic burner control unit and the burner. Voltage is supplied to the pilot gas valve V1 and the ignition transformer. After the safety time on start-up t_{SA} has elapsed and the flame signal has been received, the main valve V2 opens and the operation signalling contact between terminals 22 and 23 closes. The display indicates the current program status [04], see page 20 (Program status and fault messages).

3.3.2 Start-up without flame signal

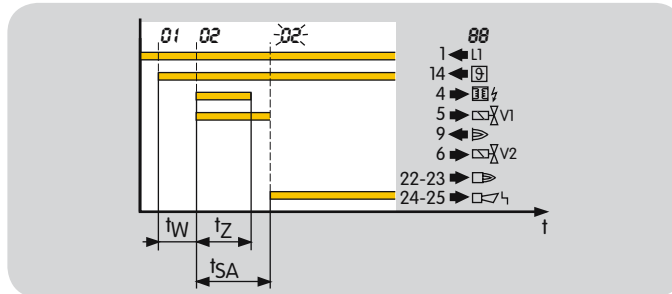

If, after a successful burner start, the automatic burner control unit does not detect a flame signal during the safety period on start-up t_{SA}, a fault lock-out will occur (fault signalling contact between terminals 24 and 25 closes). During the entire safety time on start-up t_{SA}, the pilot gas valve V1 is open. The display blinks and indicates [02], see page 20 (Program status and fault messages).

3.3.3 Flame simulation during start-up

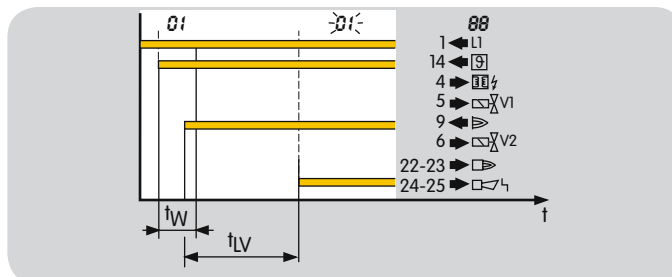

If flame simulation is signalled during start-up, the flame simulation delay time t_{LV} starts to elapse. If the flame simulation is discontinued during the flame simulation delay time t_{LV} (max. 15 s), the burner will start up. Otherwise, a fault lock-out occurs. The display blinks and indicates [02], see page 20 (Program status and fault messages).

3.3.4 Normal start-up with multi-flame control

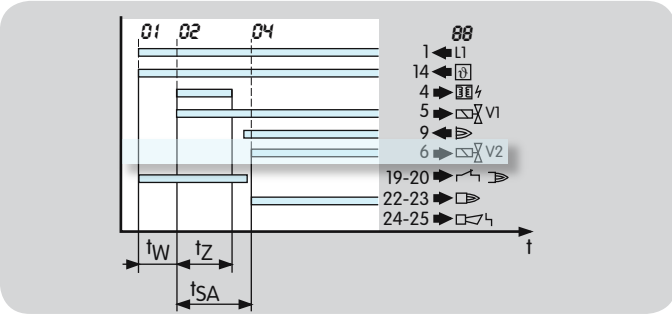

Once the start-up signal (ϑ) has been applied, the automatic burner control unit checks the internal flame amplifier and all external flame detectors (connection between terminals 19 and 20) for flame simulation during the waiting time t_W. If no flame simulation is detected during that period, the safety time on start-up t_{SA} [02] then starts to elapse (3, 5 or 10 s). This forms the minimum operating time of the automatic burner control unit and the burner. Voltage is supplied to the pilot gas valve V1 and the ignition transformer. After the safety time on start-up t_{SA} has elapsed, the flame signal of the internal flame detector and all external flame detectors causes the main valve V2 to open. The display indicates the current program status [04], see page 20 (Program status and fault messages).

3.3.5 Flame simulation with multi-flame control

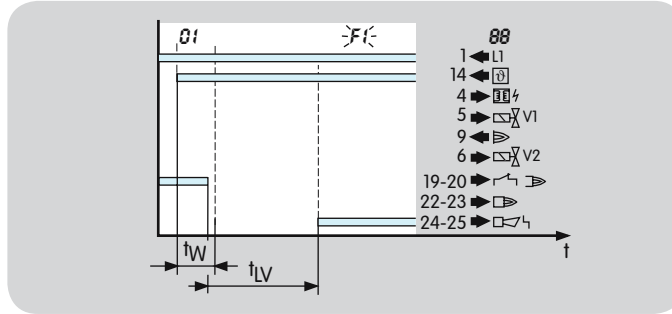

Flame simulation detected by at least one flame detector is signalled during start-up (no connection between terminals 19 and 20). The flame simulation delay time t_{LV} then starts to elapse. If the flame simulation is continued during the flame simulation delay time t_{LV} (max. 15 s), a fault lock-out will occur. The display blinks and indicates [F1], see page 20 (Program status and fault messages).

3.3.6 Error: "Closed position of gas valve"

The position indicator of the gas valve is open (no connection between terminals 19 and 20) and signals that the gas valve is not closed. The flame simulation delay time t_{LV} then starts to elapse. If the position indicator does not close during the flame simulation delay time t_{LV} (max. 15 s), a fault lock-out will occur. The display blinks and indicates [F1], see page 20 (Program status and fault messages).

3.4 Behaviour during operation

3.4.1 IFD 450: immediate fault lock-out

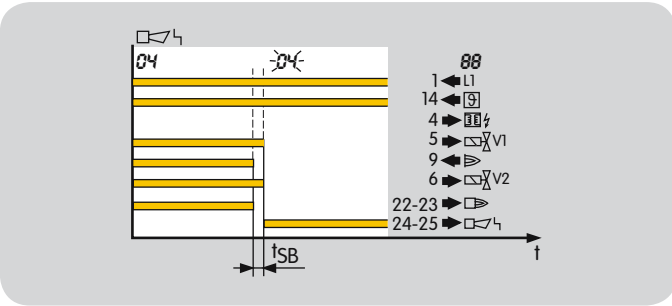

After a flame failure during operation, the IFD 450 will perform a fault lock-out within the safety time during operation t_{SB} (the safety time during operation t_{SB} is 1 second. The IFD 450 is available with a safety time of 2 seconds upon request). This involves closing the gas valves and disconnecting the power from the ignition transformer. The fault signalling contact closes and the display blinks and indicates 04 – see table "Program status and fault messages".

The fault signalling contact closes and the display blinks and indicates 04, see page 20 (Program status and fault messages).

After a fault lock-out, the IFD 450 can be reset, either by using the button on the front panel or an external button. Several automatic burner control units can be reset in parallel using the external button. The IFD 450 cannot be reset by mains failure. The fault signalling contact does, however, open as soon as the mains voltage fails.

3.4.2 IFD 454: restart

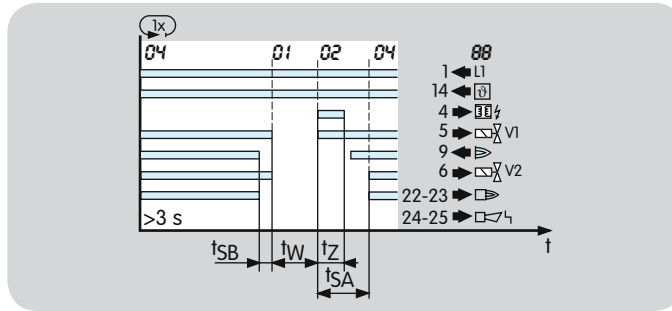

If the IFD 454 detects a flame failure after a minimum operating time of 3 seconds, the valves are closed and the operation signalling contact opened (terminals 22 to 23) within the safety time during operation t_{SB}.

The IFD 454 will now attempt to restart the burner once. If the burner does not function, a fault lock-out occurs. The display blinks and indicates 02, see page 20 (Program status and fault messages).

If the automatic burner control unit detects a flame signal within the safety time on start-up t_{SA} after the burner has successfully started up, the operation signalling contact closes and the main valve V2 is opened. The display indicates the current program status 04, see page 20 (Program status and fault messages).

In accordance with EN 746-2, a restart may be conducted only if the safety of the installation is not impaired. Restart is recommended for burners which occasionally display unstable behaviour during operation.

The precondition for a restart is that activation of the restart allows the burner to restart as intended (in all operating phases).

3.5 Behaviour following a shut-down of the burner

IFD in start-up position/standby

3.5.1 Normal shut-down

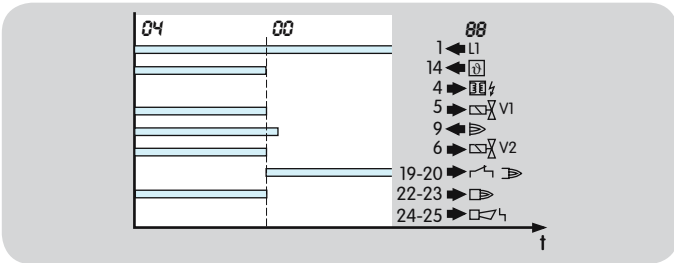

After switching off the start-up signal (ϑ), the valves close and the operation signalling contact (connection between terminals 22 and 23) opens. The burner switches off. The automatic burner control unit IFD checks in start-up position/standby, whether an extraneous signal (flame simulation) is present. The display indicates the current program status 00.

3.5.2 Flame simulation following shut-down

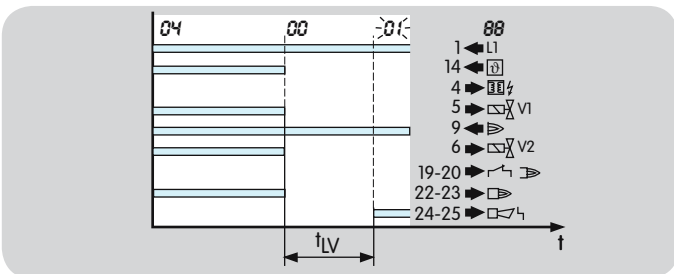

Once the burner has been shut down, flame simulation is signalled. The flame simulation delay time tLV then starts to elapse. If the flame simulation is continued during the flame simulation delay time t_{LV} (max. 15 s), a fault lock-out will occur. The display blinks and indicates 01.

3.5.3 Flame simulation with multi-flame control

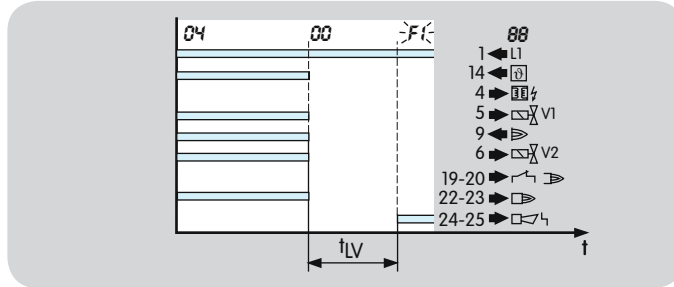

Flame simulation is signalled by at least one flame detector. The flame simulation delay time t_{LV} then starts to elapse. If the flame simulation is continued during the flame simulation delay time t_{LV} (max. 15 s), a fault lock-out will occur. The display blinks and indicates F1.

3.5.4 Error: "Closed position of gas valve"

The position indicator of the gas valve is open (no connection between terminals 19 and 20) and signals that the gas valve is still open after the burner has been shut down. The flame simulation delay time t_{LV} then starts to elapse. If the position indicator does not close during the flame simulation delay time t_{LV} (max. 15 s), a fault lock-out will occur. The display blinks and indicates F1.

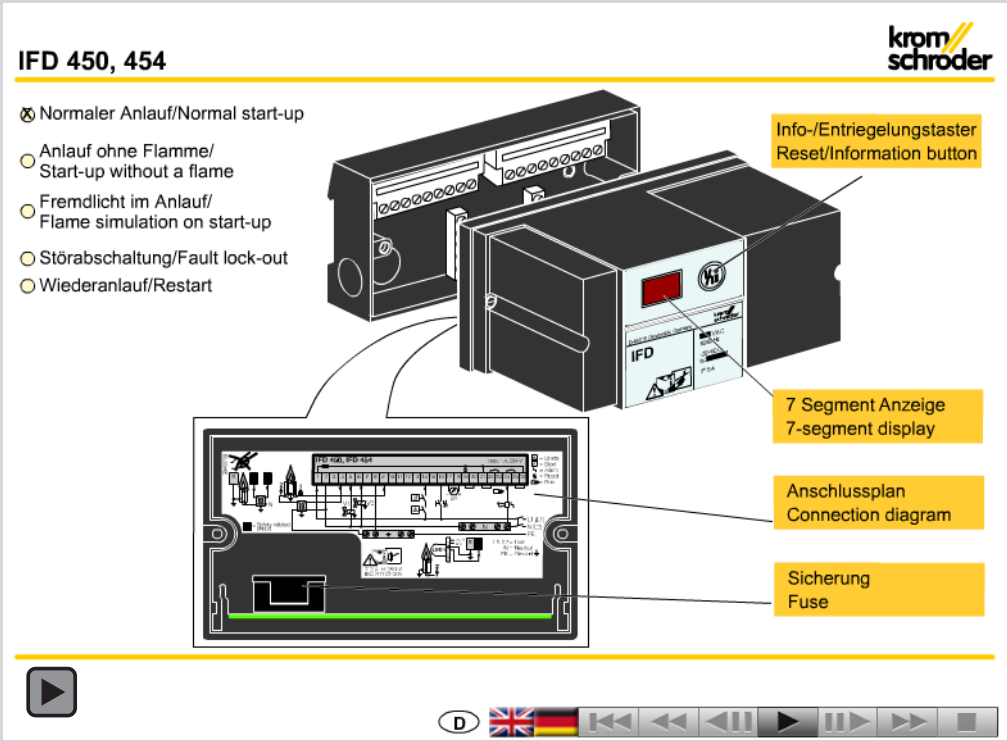

3.6 Animation

The interactive animation shows the function of the automatic burner control unit IFD.

Click on the picture. The animation can be controlled using the control bar at the bottom of the window (as on a DVD player).

To play the animation, you will need Adobe Reader 9 or a newer version. If you do not have Adobe Reader on your system, you can download it from the Internet. Go to www.adobe.com, click on "Adobe Reader" in the "Download" section and follow the instructions.

If the animation does not start to play, you can download it from the document library www.docuthek.com as an independent application.

3.7 Program status and fault messages

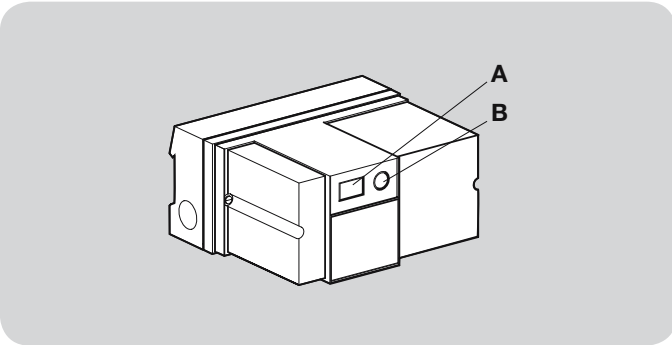

Operating controls

A: 2-digit 7-segment display to display program status and flame signal.

B: Reset/Information button to reset the system after a fault or to call up the flame signal on the display, see page 21 (Reading off the flame signal).

The 7-segment display shows the program status, **A**. In the event of a fault, the IFD halts the program run and the display starts to blink. The program status and cause of the fault are displayed in coded form.

Program status	DISPLAY	Fault message (blinking)
Start-up position/standby	00	
Waiting time/Pause time	01	Flame simulation
	F1	Flame simulation with multi-flame control*
	F1	Error: "Closed position of gas valve"
Safety time on start-up t_{SA}	02	Start-up without flame signal
Operation	04	Flame failure during operation
	10	Too many remote resets
	52	Permanent remote reset

** Multi-flame control with external flame detector*

3.7.1 Reading off the flame signal

Internally:

The flame signal can be called up on the display by pressing (> 2 seconds) the Reset/Information button. The flame signal of the burner is indicated in µA. A value between 0 and 30 µA is displayed.

Externally:

If you wish to display the flame signal using an external µ-ammeter, the signal can be obtained at terminals 17 and 18, see page 28 (Accessories).

Important!

When using an external µ-ammeter, you must make sure that this µ-ammeter cannot simulate any flame signal.

4 Replacement possiblities

IFD 450, IFD 454 up to construction stage B	IFD 450, IFD 454 from construction stage C
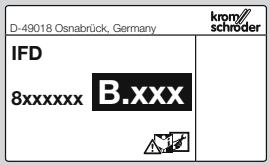	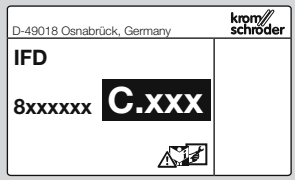
Fault signal at mains voltage. Operating signal via V2. Flame signal displayed via jacks on the upper section of the housing.	Signalling contact for fault and operating signals. An external flame signal display can be connected to terminals in the lower section of the housing.

The new automatic burner control unit is interchangeable with devices of earlier construction stages and provides almost all of the previous functions of the IFD 450 and IFD 454.

The housing dimensions and hole pattern are unchanged.

The new upper section of the housing will fit on the existing lower section. In that instance, it may be necessary for the wiring to be changed, if the fault and operating signals or the external flame signal display are to be used (for further instructions, see operating instructions “Automatic burner control unit for continuous operation IFD 450, IFD 454”).

5 Selection

5.1 Determining the safety time t_{SA}

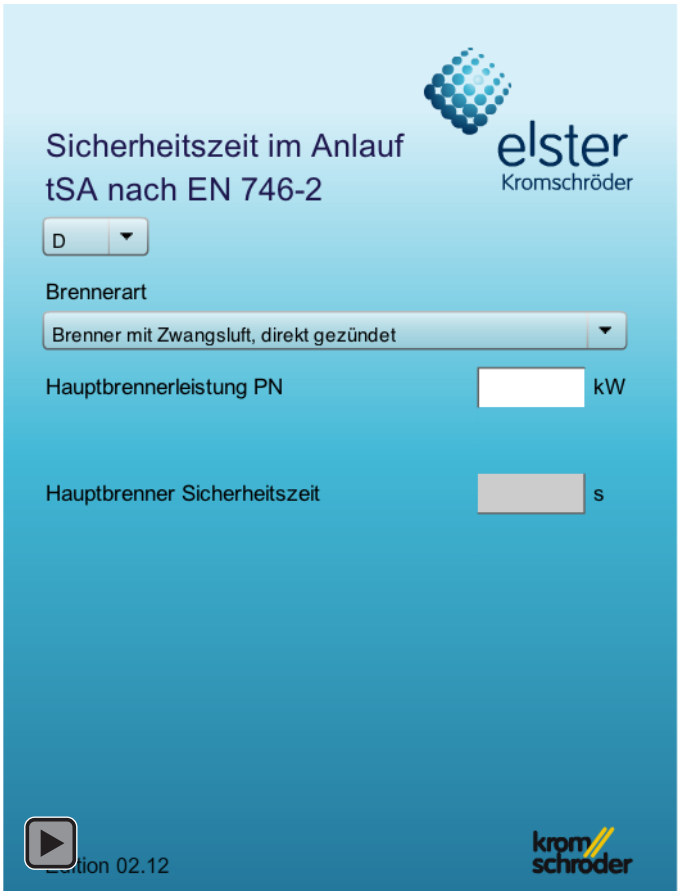

5.2 Selection table

Automatic burner control units for continuous operation IFD 450, IFD 454

	4	50	54	-3	-5	-10	/1	/2	/1	-T	-N
IFD	●	●	●	●	●	●	●	○	●	●	○

● = *standard*, ○ = *available*

Order example
IFD 450-5/1/1-T

5.2.1 Type code

Code	Description
IFD	Automatic burner control
4	Series 400
50	Fault lock-out following flame failure
54	Restart following flame failure
	Safety time on start-up t_{SA}:
-3	3 s
-5	5 s
-10	10 s
	Safety time during operation t_{SB} for V2:
/1	1 s
/2	2 s
/1	Safety time during operation t_{SB} for V1: 1 s
	Mains voltage for grounded and ungrounded mains:
-T	220/240 V AC, -15/+10%, 50/60 Hz
-N	110/120 V AC, -15/+10%, 50/60 Hz

6 Project planning information

6.1 Cable selection

Use mains cable suitable for the type of operation and complying with local regulations.

Signal and control line: max. 2.5 mm^2.

Cable for burner ground/PE wire: 4 mm^2.

Do not route IFD cables in the same cable duct as frequency converter cables or other cables emitting strong fields.

6.1.1 Ionization cable and ignition cable

Use unscreened high-voltage cable for both lines, see page 28 (Accessories).

Recommended cable length:

ionization cable – max. 50 m,

ignition cable – max. 5 m, recommended < 1 m.

The longer the ignition cable, the lower the ignition capacity.

Avoid external electrical interference.

Lay cables individually and not in a metal conduit, if possible.

Lay the ignition cable and UV cable/ionization cable as far apart as possible.

Screw the ignition cable securely into the ignition transformer TGI/TZI and feed it out of the unit on the shortest possible route (no loops).

Only use radio interference suppressed electrode adapters (with 1 kΩ resistor) for ignition electrodes, see page 28 (Accessories).

6.1.2 UV cable

The UV cable should be no longer than 50 m and should be laid as far as possible from the ignition cable.

6.2 Star electrodes

We recommend using 7.5 kV ignition transformers on burners with star electrodes.

6.3 Purge

In the case of multiple burner applications, burners with forced air supply are used. The air for combustion and pre-purge is supplied by a central fan controlled by a separate logic. This logic determines the purging time and controls an external relay that switches the air valve to purge.

The automatic burner control unit must not be activated during purging. This is achieved by interrupting the safety interlock, amongst other methods.

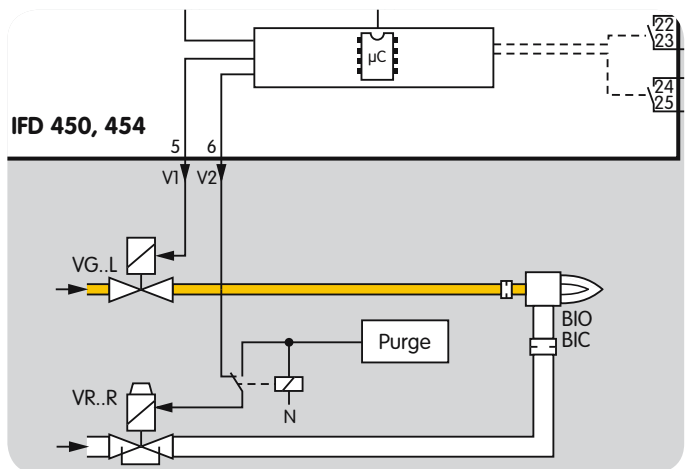

6.4 Emergency stop in the event of fire or electric shock

If there is a risk of fire, electric shock or similar, inputs L1, N and ⚠ of the IFD should be disconnected from the electrical power supply.

Important! This should be reflected in the wiring on site!

6.5 Emergency stop triggered by safety interlock

The safety interlock turns off the power to the ⚠ input, such as in the event of air deficiency or similar.

Important! The valve V1 remains open for the entire duration of the safety time on start-up t_{SA}!

6.6 Parallel reset

Several automatic burner control units can be reset in parallel using the external button. The IFD 450 cannot be reset by mains failure. The fault signalling contact does, however, open as soon as the mains voltage fails.

6.7 Remote reset

Permanent

Permanent remote reset gives rise to a malfunction. If a remote reset signal is permanently applied to terminal 16, 52 flashes on the display as a warning signal. The IFD continues operation until it locks off.

Automatic (PLC)

Check whether automatic remote reset (PLC) complies with standards (reset for no longer than 1 second).

If a fault is acknowledged by remote reset too often, 10 flashes on the display to indicate a fault (too many remote resets). The error can only be acknowledged with the Reset/Information button on the unit.

The burner malfunction must be remedied. The malfunction cannot be remedied by changing the method of activation.

6.8 Wiring

The IFD is suitable for hard wiring only. Do not reverse phase and neutral conductor. Different phases of a three-phase current system must not be installed at the IFD.

No voltage may be connected to the valve and ignition outputs.

The burner should be adequately grounded. Incorrect wiring and an insufficient ground connection can cause damage to the equipment during single-electrode operation.

In the case of single-electrode operation, only ignition transformers of type TZI or TGI may be used. The use of pulse-spark or high-frequency ignition devices is not permitted.

6.9 Note on EC type-examination

Since EN 298 (1993) does not describe all functions of the IFD, the operator is responsible for ensuring that all parameters and functions are matched to the respective application.

6.10 Installation of solenoid valves for gas

During the safety time on start-up t_{SA}, the burner must be supplied with gas and ignited. For this reason, the gas solenoid valve should be installed as close as possible to the burner itself. This is particularly true in the case of multiple burner applications.

6.11 Flame control

6.11.1 ... with ionization sensor

The IFD generates an alternating voltage (230 V AC) between the sensing electrode and burner ground. The flame rectifies this voltage. Only the DC signal (> 1 µA) is recognized by the automatic burner control unit as a flame.

A flame cannot be simulated by a short-circuit.

Ignition and monitoring with a single electrode is possible, see page 11 (IFD 450, 454 with ionization control in single-electrode operation).

6.11.2 ... with UV sensor UVD 1

A UV tube inside the UV sensor detects the ultraviolet light of a flame. It does not respond to sunlight, incandescent bulb light or infrared radiation emitted by hot workpieces or red-hot furnace walls.

In the event of incident UV radiation the UV sensor rectifies the supplied alternating voltage. As with ionization control, the automatic burner control unit only detects this DC signal.

When using the UV sensor UVD 1, the response time (IFD + UVD) is extended to a total of 2 seconds. Check compliance with standards! In accordance with the stipulations of EN 746-2, the total closing time (UV sensor + automatic burner control unit IFD + gas valve) must not exceed 3 seconds.

This combination is only authorized for use in accordance with the Machinery Directive (EN 746-2).

6.11.3 Reading the flame signal with an external µ-ammeter

If you wish to display the flame signal using an external µ-ammeter, the signal can be obtained at terminals 17 and 18, see page 28 (Accessories).

Important!

When using an external µ-ammeter, you must make sure that this µ-ammeter cannot trigger an incorrect flame signal.

7 Accessories

7.1 High-voltage cable

FZLSi 1/7 up to 180°C (356°F),
Order No. 04250410,

FZLK 1/7 up to 80°C (176°F),
Order No. 04250409.

7.2 Radio interference suppressed electrode adapters

Plug cap, 4 mm (0.16 inch), interference-suppressed,
Order No. 04115308.

Straight plug, 4 mm (0.16 inch), interference-suppressed,
Order No. 04115307.

Straight plug, 6 mm (0.2 inch), interference-suppressed,
Order No. 04115306.

7.3 µ-ammeter FSM1

DC micro-ammeter for flame signal measurement (also suitable for single-electrode operation).

Order No. 84380850.

8 Technical data

Mains voltage for grounded and ungrounded mains:
IFD..T: 220/240 V AC, -15/+10%, 50/60 Hz,
IFD..N: upon request
110/120 V AC, -15/+10%, 50/60 Hz.

Safety time on start-up t_{SA}: 3, 5 or 10 s.

Safety time during operation t_{SB}: < 1 s, < 2 s.

Ignition time t_Z: approx. 2, 3 or 7 s.

Power consumption: approx. 9 VA.

Output to ignition transformer with no-switch contacts via semi-conductor.
Output voltage for valves and ignition transformer = mains voltage.

Contact rating:
max. 1 A, cos φ = 1 per output,
V2: max. 0.75 A, cos φ = 1,
max. number of operating cycles: 250,000.

Total load: max. 2 A.

Reset button: max. number of operating cycles: 1000.

Signal inputs:

Input voltage	110/120 V AC	220/240 V AC
Signal "1"	80 – 126.5	160 – 253
Signal "0"	0 – 20	0 – 40
Frequency	50/60 Hz	

Input current signal inputs: signal "1" typ. 2 mA.

Flame control:
sensor voltage: approx. 220 V AC,
sensor current: > 1 µA,
max. sensor current: ionization < 28 µA.

Permissible UV sensors:
Elster Kromschröder model UVD 1, for ambient temperatures from -20 to +60°C (-4 to +140°F)
or
Elster Kromschröder model UVS 10 for intermittent operation, for ambient temperatures from -40 to +80°C (-40 to +176°F).

Valve connections: 2.

Fuse in unit: F1: T 2A H 250 V pursuant to IEC 127-2/5.

Ambient temperature: -20 to +60°C (-4 to +140°F).

Relative humidity: no condensation permitted.

Enclosure: IP 54 pursuant to IEC 529.

Overvoltage category III pursuant to EN 60730.

Cable gland: M16.

Installation position: any.

Weight: 790 g.

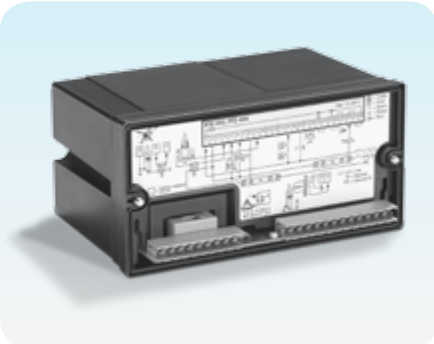

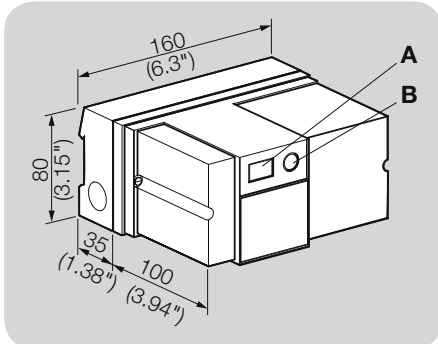

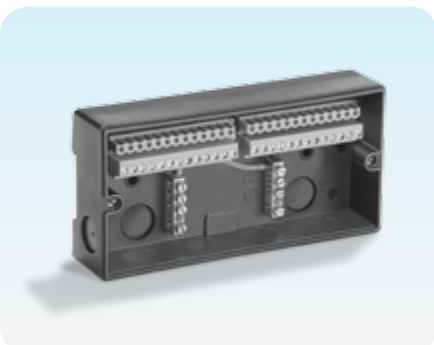

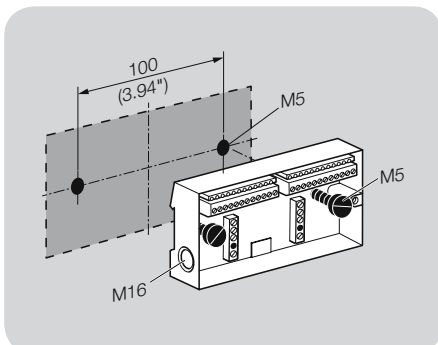

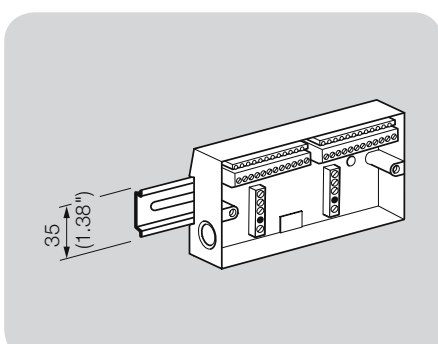

8.1 Operating controls

A: 2-digit 7-segment display to display program status and flame signal.

B: Reset/Information button to reset the system after a fault or to call up the flame signal on the display.

8.2 Installation

The unit can be installed in any position. The installation position should however be selected carefully in order to ensure that the display can easily be read.

The housing is made of impact-resistant plastic. The upper section containing the detection circuitry is a push connection fit into the lower section. The connection terminals, grounding strip and neutral bus are located in the lower section. The upper section of the housing is attached to the lower section using two screws.

The lower section can either be snapped onto a U-shaped rail or secured with two M5 screws. In order to obtain enclosure IP 54, two sealing washers must be placed beneath the M5 screws.

The housing has 6 knock-out holes for M16 plastic cable glands.

9 Maintenance cycles

The automatic burner control units for continuous operation IFD 454 and IFD 450 require little maintenance.

10 Legend

88	Display
88	Blinking display
	Safety interlock (Limits)
	Start-up signal
	Ignition transformer
V1	Gas valve
V2	Main gas valve
	Flame signal
	Operating signal/RUN
	Fault signal
i	Reset/Information
	Input signal
	Output signal
Z	Ignition/High voltage
I	Ionization
	Input/Output safety circuit
t_W	Waiting time
t_{LV}	Flame simulation delay time
t_Z	Ignition time
t_{SA}	Safety time on start-up (3, 5 or 10 s)
t_{SB}	Safety time during operation (< 1 s or < 2 s)

11 Glossary

11.1 Waiting time t_W

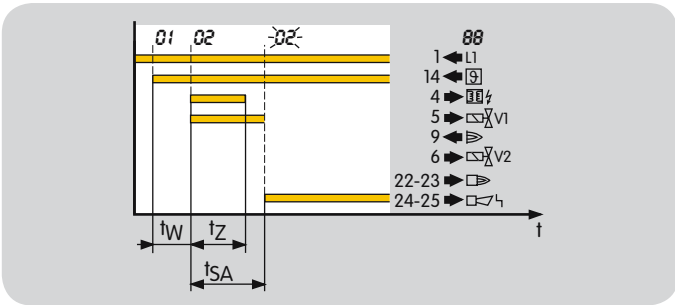

Once the start-up signal ϑ has been applied, the waiting time t_W starts to elapse. During this time, a self-test is conducted to detect errors in internal and external circuit components. If no malfunction is detected, the burner will start up.

11.2 Safety time on start-up t_{SA}

This refers to the period of time between switching on and switching off of the pilot gas valve V1, when no flame signal is detected. The safety time on start-up t_{SA} (3, 5 or 10 s) is the minimum operating time of the burner and automatic burner control unit.

11.3 Ignition time t_Z

If no malfunction is detected during the waiting time t_W, the ignition time t_Z then starts to elapse. Voltage is supplied to the pilot gas valve V1 and the ignition transformer and the burner is ignited. The duration of the ignition time is either 2, 3 or 7 seconds, see page 29 (Technical data).

11.4 Flame simulation/Flame simulation delay time t_{LV}

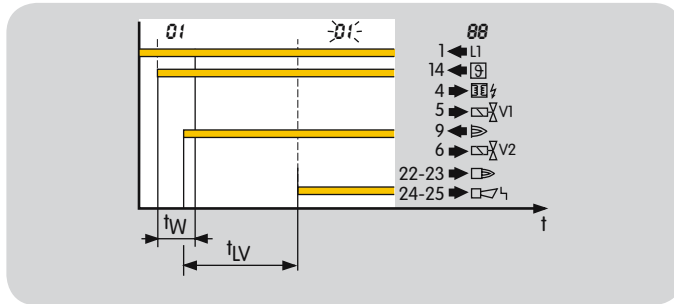

Flame simulation is an incorrect flame signal. If flame simulation is detected during start-up, the flame simulation delay time t_{LV} (max. 15 s) starts to elapse. If the flame simulation is discontinued during the flame simulation delay time t_{LV}, start-up can be initiated or operation continued. Otherwise, a fault lock-out occurs.

11.5 Safety time during operation t_{SB}

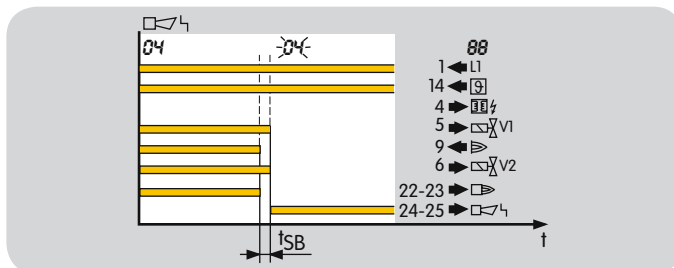

If the flame fails during operation, the valves are closed within the safety time t_{SB}.

The default safety time during operation t_{SB} in accordance with EN 298 is 1 second. In accordance with EN 746-2, the safety time of the installation during operation (including closing time of the valves) may not exceed 3 seconds, see page 27 (Flame control). Note the requirements of the Standards!

11.6 Flame signal

If a flame is detected, the flame detector will supply a flame signal.

11.7 Flame detector

The flame detector detects and signals the presence of a flame. The flame detector usually consists of a flame sensor, an amplifier and a relay to produce the signal.

11.8 Fault lock-out

In the event of a fault lock-out, all valves are closed and a fault signalled. Resetting must take place manually following a fault lock-out.

11.9 Safety interlock (Limits)

The limiters in the safety interlock (linking of all the relevant safety control and switching equipment for the use of the application, for example STB, Gas_{min}, Gas_{max} ...) must isolate input ⚠ from the voltage supply.

11.10 Pilot gas valve V1

The pilot gas valve V1 is opened at the start of the safety time on start-up t_{SA}. It remains open in the event of a fault, or until the burner is switched off.

11.11 Main valve V2

Once the safety time on start-up t_{SA} has elapsed, the main valve V2 is opened. It remains open until the burner is switched off or a fault is signalled.

An air control valve is frequently connected to the terminal of the main valve V2.

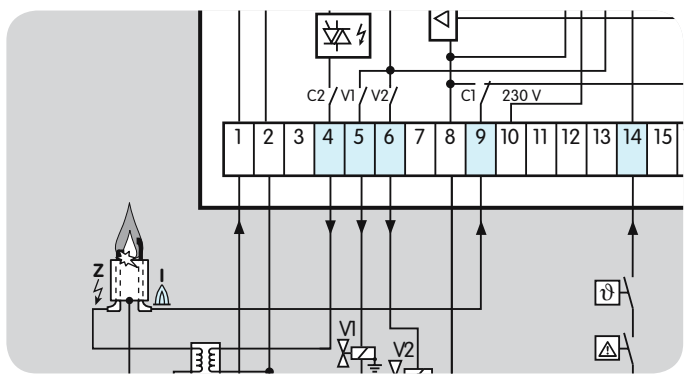

11.12 Continuous operation

The gas burner has been running for longer than 24 hours and was not switched off during that time.

Feedback

Finally, we are offering you the opportunity to assess this "Technical Information (TI)" and to give us your opinion, so that we can improve our documents further and suit them to your needs.

Clarity

- ◯ Found information quickly
- ◯ Searched for a long time
- ◯ Didn't find information
  What is missing?
- ◯ No answer

Comprehension

- ◯ Coherent
- ◯ Too complicated
- ◯ No answer

Scope

- ◯ Too little
- ◯ Sufficient
- ◯ Too wide
- ◯ No answer

Use

- ☐ To get to know the product
- ☐ To choose a product
- ☐ Planning
- ☐ To look for information

Navigation

- ◯ I can find my way around
- ◯ I got "lost"
- ◯ No answer

My scope of functions

- ◯ Technical department
- ◯ Sales
- ◯ No answer

Remarks

(Adobe Reader 7 or higher required)
www.adobe.com

Contact

Elster GmbH
Postfach 2809 · 49018 Osnabrück
Strotheweg 1 · 49504 Lotte (Büren)
Germany
T +49 541 1214-0
F +49 541 1214-370
info@kromschroeder.com
www.kromschroeder.com
www.elster.com

The current addresses of our international agents are available on the Internet:
www.kromschroeder.de/index.php?id=718&L=1

We reserve the right to make technical modifications in the interests of progress.

Copyright © 2012 Elster Group
All rights reserved.

03250621