DRxxGMLA / DRxxxGFLA
3-WAY ROTARY VALVE PN6

- Chrome-plated plug for long life.
- Optimized characteristic for supply water temperature control
- Protected against corrosion and blocking
- Reliable mounting for electrical actuators
- Clear position indicator
- Wide range of flow rates with suitable actuators

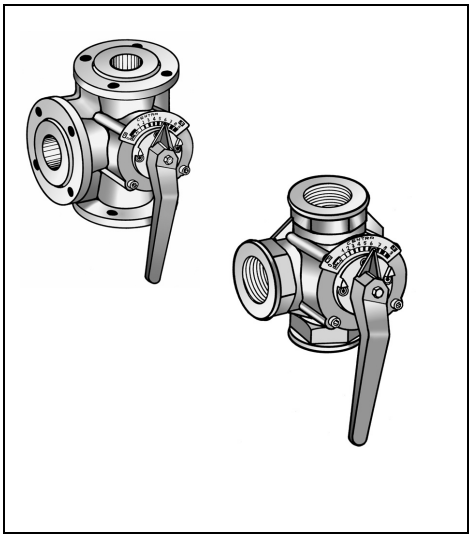

APPLICATION

The DRxxGMLA / DRxxxGFLA rotary valves provide water temperature control in heating and air conditioning applications.
These valves are designed for accurate mixing control of supply water temperature in heating and air conditioning systems.
Its sturdy construction ensures a long and reliable operating life when used in combination with M6061/VMM and M7061/VRM actuators.

Technical Specification	
Nominal static pressure	6 bar, 600kPa
Maximum pressure drop	depending on type (see section "Specification and Order Number" on page 2)
Leakage rate	< 1% of kVS
Ports	IntelInternal threads / flange in accordance with DIN EN 1092-2 depending on type (see section "Specification and Order Number" on page 2) rnal threads
Angle of rotation	90°
Internal threads	8 windings long
Packing	Double o-ring sealing
Material body	Cast iron
Material inner parts	Chrome-plated cast iron
Medium	Heating water according to VDI 2035 (oxygen concentration less than 0.2 g/m3, pH 8...9.5), glycol-water mixtures (max. 50% glycol)
Water temperatures in the valve	2 to 130 °C, non-condensing
Weight	depend on type (see sections"Dimensions with DRxxGMLA (mm)"and "Dimensions with DRxxxGFLA(mm)" on page 3)
Flow characteristic	equal percentage

Honeywell

ПРОМЭЛЕКТРОНИКА, sales@prom-elec.com

SPECIFICATION AND ORDER NUMBER						
DN	kVS [m³/h]	Δp max [kPa]	nominal torque [Nm]	OS no. internal thread	OS no. flange	torque [Nm] for reduced Δp (40 kPa)
15	4,0	100	20	DR15GMLA	–	20
20	6,3	100	20	DR20GMLA	DR20GFLA	20
25	10	100	20	DR25GMLA	DR25GFLA	20
32	16	100	20	DR32GMLA	DR32GFLA	20
40	25	100	20	DR40GMLA	DR40GFLA	20
50	40	100	20	–	DR50GFLA	20
65	63	100	20	–	DR65GFLA	20
80	100	100	30	–	DR80GFLA	20
100	160	100	40	–	DR100GFLA	30
125	250	70	40	–	DR125GFLA	30
150	630	50	40	–	DR150GFLA	40
200	1600	50	40	–	DR200GFLA	40
200	1000	50	40	–	DR200GFLA1	40

SUITABLE ACTUATORS

M6061A (24V; floating); M6061L (230V/240V; floating); M7061E (0/2 to 10V modulating)

torque [Nm]	OS no. 24 Vac floating	OS no. 230 Vac floating	OS no. 0/2-10 V
20	M6061A1021 / VMM20-24	M6061L1027 / VMM20	M7061E1020 / VRM20
30	M6061A1039 / VMM30-24	M6061L1035 / VMM30	–
40	M6061A1047 / VMM40-24	M6061L1043 / VMM40	–
40	VMM40-24F	VMM40F	–

OPERATION

The valve controls a mixing water temperature with a rotating plug. The plug adjusts with two control curves the water flow of two inputs. The required flow water temperature is reached by adding a proportion of return water to the boiler hot water. For optimum control performance, the DR has special control characteristics.

MOUNTING

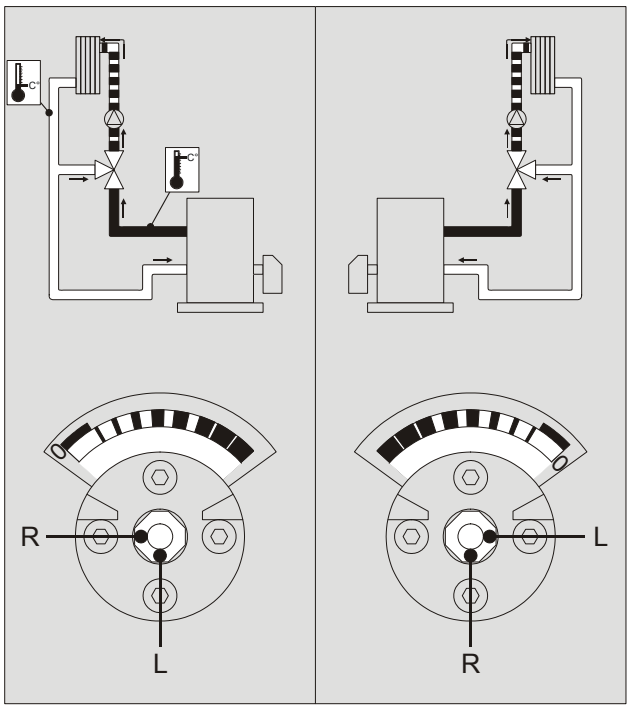

DIMENSIONS WITH DRxxGMLA (MM)

type	DN	a	c	SW	h	i	net weight
DR15GMLA	15	110	179	41	55	R ½ in.	2.2 kg
DR20GMLA	20	110	179	46	55	R ¾ in.	2.3 kg
DR25GMLA	25	115	179	50	58	R 1 in.	2.4 kg
DR32GMLA	32	140	188	60	70	R1 ¼in.	4.1 kg
DR40GMLA	40	150	188	65	75	R1 ½n.	4.3 kg

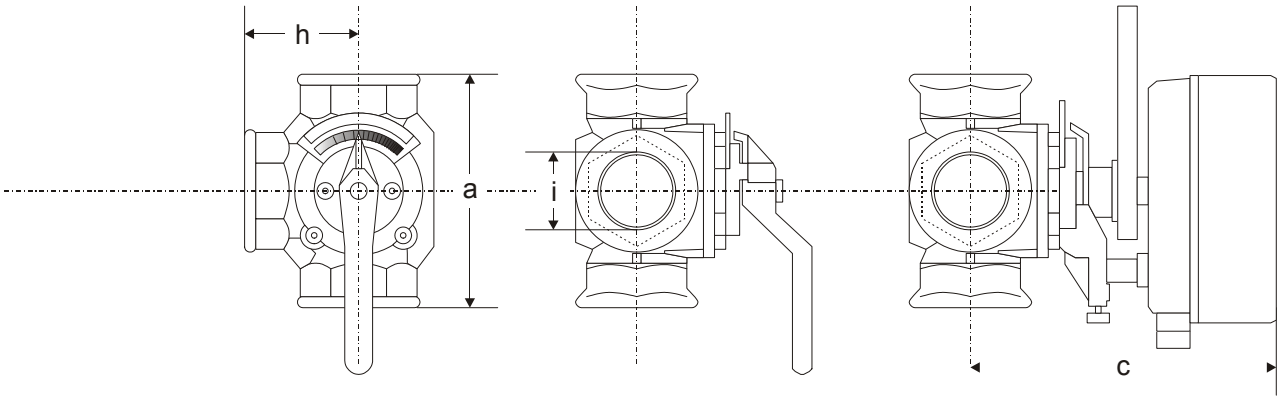

DIMENSIONS WITH DRxxxGFLA (MM)

type	DN	a	c	SW	e	h	net weight
DR20GFLA	20	140	15	179	90	70	3.5 kg
DR25GFLA	25	150	15	179	100	75	4.0 kg
DR32GFLA	32	160	17	188	120	80	6.6 kg
DR40GFLA	40	170	16	188	130	85	7.1 kg
DR50GFLA	50	190	16	202	140	95	9.8 kg
DR65GFLA	65	210	16	219	160	105	12.3 kg
DR80GFLA	80	250	18	219	190	125	21.4 kg
DR100GFLA	100	270	18	240	210	135	26.5 kg
DR125GFLA	125	310	20	267	240	155	42.0 kg
DR150GFLA	150	330	20	274	265	165	49.0 kg
DR200GFLA/ DR200GFLA1	200	390	22	314	320	195	78.0 kg

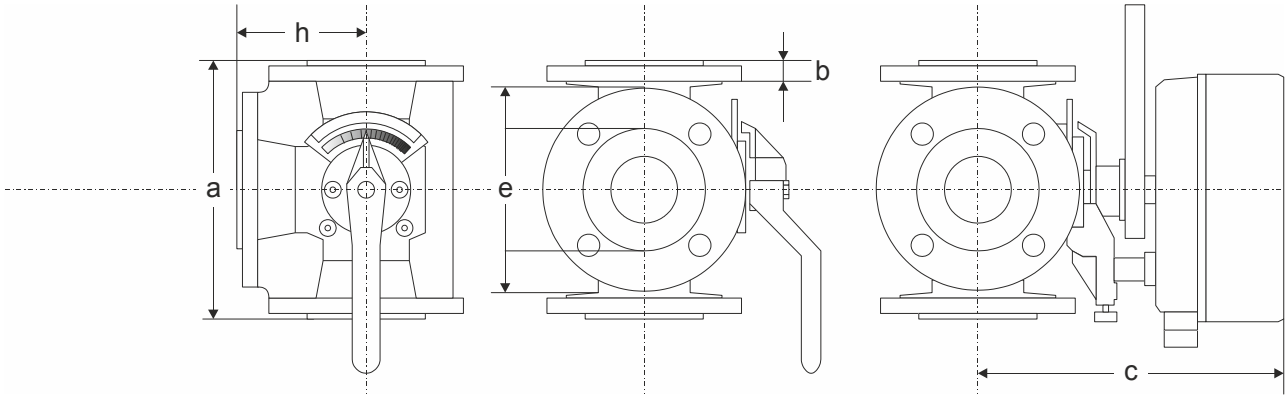

For more information,
https://honeywellbuildings.in
Call: 1-800-103-0339
Email: HBT-Indiabuildings@honeywell.com

Honeywell HBT India Buildings
Unitech Trade Center, 5th Floor, Sector-43,
Block C, Sushant Lok Phase - I,
Gurgaon - 122 002

www.honeywell.com

© 2020 Honeywell International Inc.