# Braukmann V5032

Промэлектроника
sales@prom-elec.com

## Kombi-2-plus

Manual double regulating balancing valve

## APPLICATION

The V5032 Kombi-2-plus is a static, variable orifice seperate double regulating balancing valve for the return with additional shut-off function.

It is suitable for use in variable and constant flow systems to manually balance the flow and to set resistances to an equal level all over the system.

V5032 Kombi-2-plus is typically used for static balancing of fan coil units, air handling units, chilled ceilings and two-pipe heating systems. It can be installed on the flow or the return side, general installation behaviour is to install it on the return side.

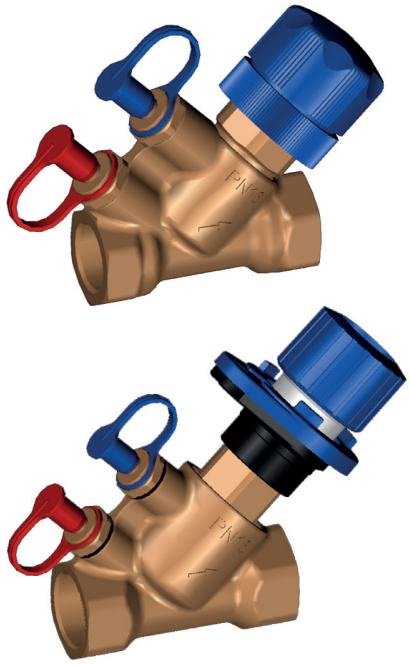

## SPECIAL FEATURES

- Manual balancing of flow rates
  - Precise presetting with numeric scale
  - Concealed presetting prevents unwanted operation
- Wide range of application
  - Sizes DN10 up to DN80
  - Versions for standard and low flow rates available
- Easy commissioning
  - Fast and safe measurement with SafeCon™ measuring connections – 6 times faster than standard Binder connections
  - DN size and settings readable on handwheel even with insulated valve
  - All functions located on one side for easier access and use
  - Optimal measuring in combination with BasicMes (VM242) - all flow values are already included in the measuring device
- Maintenance friendly
  - Insert fully interchangeable
  - Integrated shut-off function
  - Presetting is not changed during shut-off

## VALVE EFFICIENCY

| | low | | | | high |
|---|---|---|---|---|---|
| **Energy efficiency** | ● | ● | ● | ○ | ○ |
| **Commissioning effort** | ● | ● | ● | ● | ● |
| **Calculation effort** | ● | ● | ● | ● | ○ |



ПРОМЭЛЕКТРОНИКА / sales@prom-elec.com

## TECHNICAL DATA

| | |
|---|---|
| **Media** | |
| Medium: | Water or water-glycol mixture, quality to VDI 2035 (up to 50 % Glycol) |
| pH-value: | 8...9.5 |
| **Pressure values** | |
| Max. operating pressure: | max. 16 bar (232 psi) |
| **Operating temperatures** | |
| Water: | -20...130 °C (-4...266 °F)* |
| Water-glycol mixtures: | -20...110 °C (-4...230 °F)* |
| **Connections/Sizes** | |
| Nominal size: | DN10 - DN80 |
| **Specifications** | |
| Housing: | DN10 - DN50: Dezincification-resistant brass DN65 - DN80: Red bronze |
| $k_{VS}$ ($c_{VS}$)-value: | See the flow data charts |

Note: * for water-glycol mixtures to VDI 2035 max. temperature 110 °

Note: Water with temperature above 100 °C can only be used for heating systems

Note: To avoid stone deposit and corrosion the composition of the medium should conform with VDI-Guideline 2035

Note: Additives have to be suitable for EPDM sealings

Note: System has to be flushed thoroughly before initial operation. Valve inserts must be removed before flushing and all valve openings sealed by blind caps (see 'Accessories' above)

Note: Any complaints or costs resulting from non-compliance with above rules will not be accepted

Note: Please contact us if you should have any special requirements or needs

## CONSTRUCTION

### V5032BLF

**Overview**

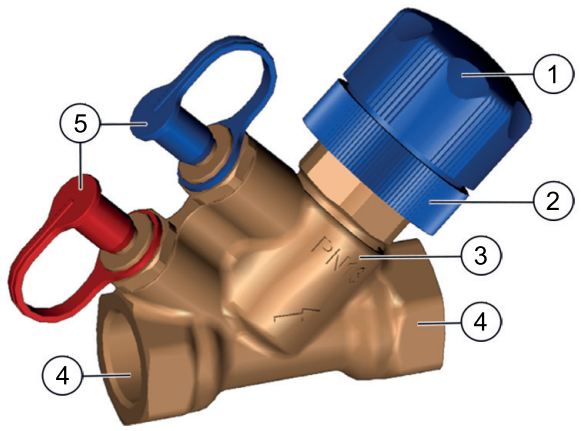


| | Components | Materials |
|---|---|---|
| **1** | Handwheel for the shut-off function | Plastic |
| **2** | Concealed presetting with numeric display | Plastic |
| **3** | Valve housing with internal threads to DIN EN 10226-1 for threaded pipe and two G$^1/_4$" connections equipped with SafeCon™ pressure test valves | Dezincification-resistant brass |
| **4** | Two SafeCon™ measuring connections | Brass and plastic |
| **5** | SafeCon™ pressure test valve with colour marked protection cap | Rubber |
| | **Not depicted components:** | |
| | Valve insert | Brass |
| | O-rings and soft seals | EPDM |
| | Installation and setup instructions | Available from the Resideo online catalogue |

**V5032B**

| Overview | | Components | Materials |
|---|---|---|---|
| 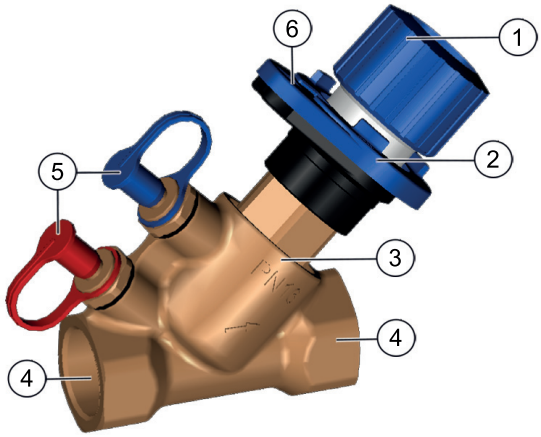  | **1** | Handwheel with presetting dial and display | DN15 - DN50:<br>Plastic<br>DN65 - DN80:<br>Steel |
| | **2** | Concealed presetting | Plastic |
| | **3** | Valve housing with internal threads to DIN EN 10226-1 for threaded pipe and two G¹/₄" connections equipped with SafeCon™ pressure test valves | DN15 - DN50:<br>Dezincification-resistant brass<br>DN65 - DN80:<br>Red bronze |
| | **4** | Two SafeCon™ measuring connections | Brass and plastic |
| | **5** | SafeCon™ pressure test valve with colour marked protection cap | Rubber |
| | **6** | Numeric display of presetting | Plastic |
| | | **Not depicted components:** | |
| | | Valve insert with shut-off function | Brass |
| | | Seat sealing | PTFE |
| | | O-rings and soft seals | EPDM |
| | | Installation and setup instructions | Available from the Resideo online catalogue |

## METHOD OF OPERATION

The V5032 valves are usually installed in the return pipeline.

Based on the required flow rate the valve is preset to a certain value by turning the presetting clockwise (increasing the presetting) or anticlockwise (decreasing the presetting). Required presetting value can be determined by using tables further below, by using a sizing tool, by measuring or directly from design documentation. The required flow at full load is normally calculated in advance by a consultant or similar specialist and must be known for system balancing.

**Valve Identification**

Each valve is marked as follows:

- OS - Number
- DN size
- PN rating
- Flow arrows
- Serial number/date code

## TECHNICAL CHARACTERISTICS

**Correction Factor f**

When the density σ is expressed in t/m³ instead of kg/m³ the correction factor f is the result. The correction factor f can be used to recalculate kv-value, pressure drop and flow:

$$kv_{Medium} = kv_0 \times \frac{1}{\sqrt{f}} \qquad \Delta p_{Medium} = \Delta p_0 \times f \qquad m_{Medium} = m_0 \times \frac{1}{\sqrt{f}}$$

**Influence of Coolants on Flow Values**

The flow through a valve is defined by the kv-value. The kv-value is the flow m through a valve in [m³/h] at a differential pressure of 1 bar (14.5 psi) and is only valid for fluids with a density of σ0 = 1000 kg/m³. This condition is met by water at a temperature of 20°C (68°F). For fluids with another density the following formula can be applied:

$$kv_{Medium} = \frac{m}{\sqrt{\Delta p}} \times \frac{\sqrt{\rho_{Medium}}}{\sqrt{\rho_0}}$$

**Flow Data V5032B, DN10**

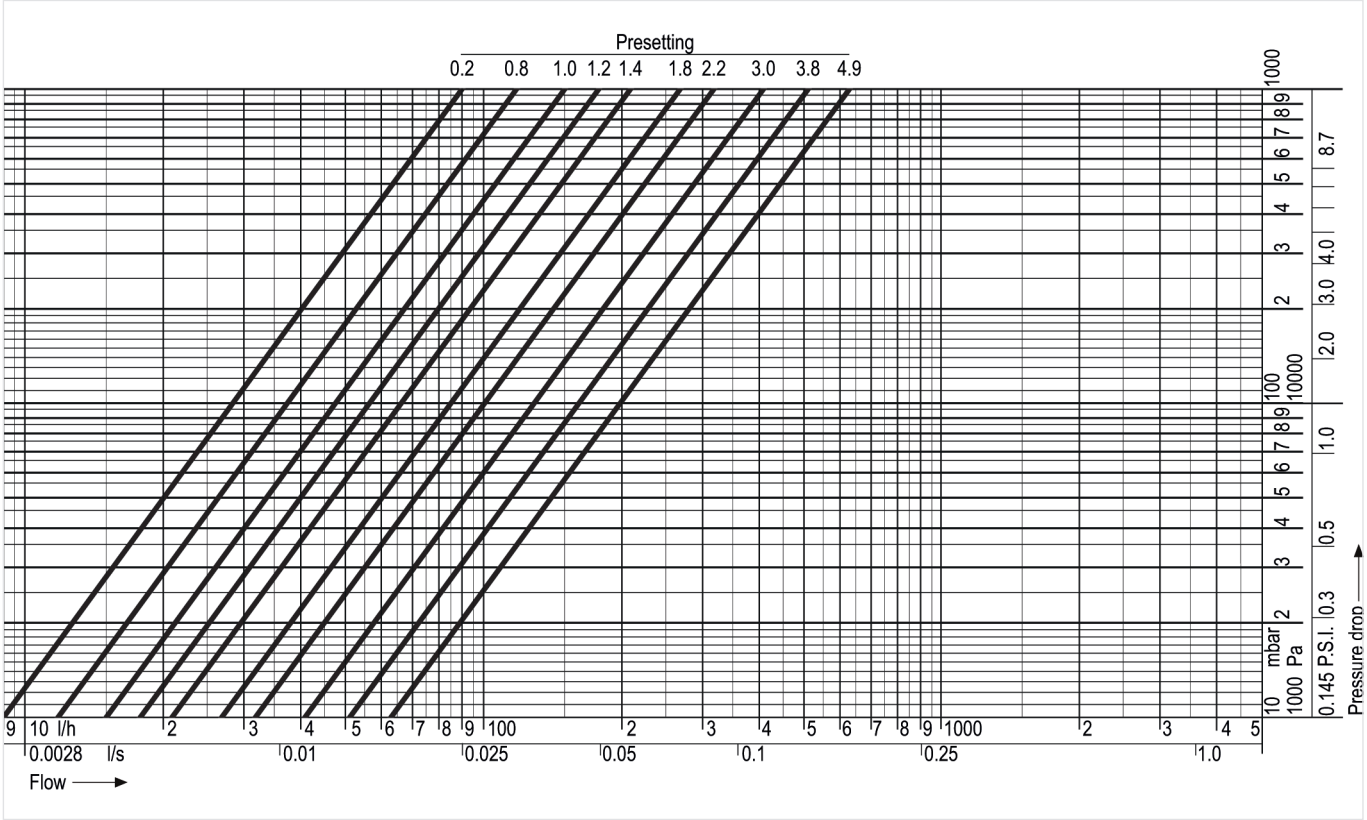


**Presetting values**

| Setting: | 0.2 | 0.3 | 0.4 | 0.5 | 0.6 | 0.7 | 0.8 | 0.9 | 1.0 |
|---|---|---|---|---|---|---|---|---|---|
| $k_v$-value: | 0.09 | 0.099 | 0.099 | 0.101 | 0.103 | 0.109 | 0.119 | 0.134 | 0.15 |
| cv-value: | 0.09 | 0.099 | 0.099 | 0.101 | 0.103 | 0.109 | 0.119 | 0.134 | 0.15 |

| Setting: | 1.2 | 1.4 | 1.6 | 1.8 | 2.0 | 2.2 | 2.4 | 2.6 | 2.8 |
|---|---|---|---|---|---|---|---|---|---|
| $k_v$-value: | 0.182 | 0.215 | 0.243 | 0.269 | 0.295 | 0.319 | 0.344 | 0.369 | 0.392 |
| cv-value: | 0.184 | 0.217 | 0.246 | 0.273 | 0.302 | 0.327 | 0.355 | 0.382 | 0.409 |

| Setting: | 3.0 | 3.2 | 3.4 | 3.6 | 3.8 | 4.0 | 4.2 | 4.4 | 4.6 |
|---|---|---|---|---|---|---|---|---|---|
| $k_v$-value: | 0.414 | 0.435 | 0.458 | 0.486 | 0.517 | 0.554 | 0.589 | 0.619 | 0.631 |
| cv-value: | 0.434 | 0.461 | 0.488 | 0.524 | 0.563 | 0.614 | 0.668 | 0.714 | 0.733 |

| Setting: | 4.8 | 4.9 = open |
|---|---|---|
| $k_v$-value: | 0.632 | $k_{vs}$ = 0.631 |
| cv-value: | 0.732 | $c_{vs}$ = 0.729 |

**Flow Data V5032B, DN15**

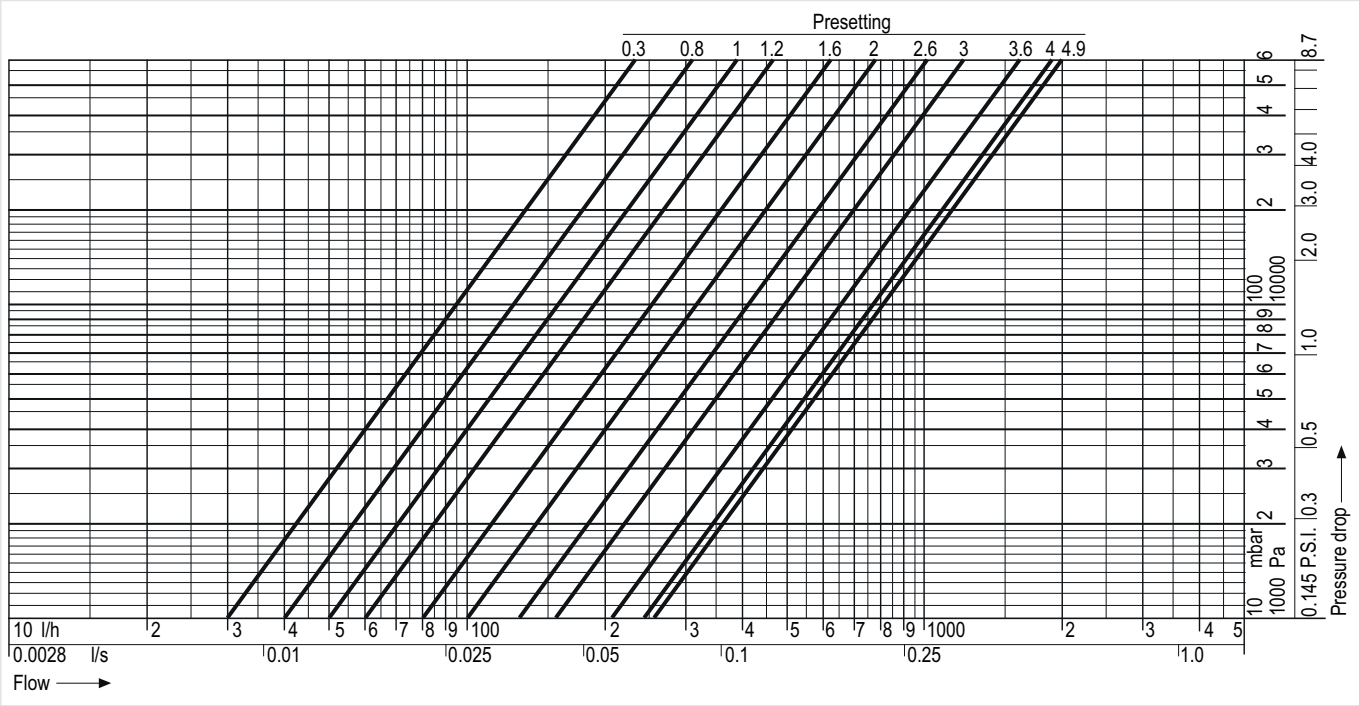


**Presetting values**

| **Setting:** | **0.3** | **0.4** | **0.6** | **0.8** | **1** | **1.2** | **1.4** | **1.6** | **1.8** |
|---|---|---|---|---|---|---|---|---|---|
| $k_v$-value: | 0.3 | 0.3 | 0.3 | 0.4 | 0.5 | 0.6 | 0.7 | 0.8 | 0.9 |
| cv-value: | 0.3 | 0.3 | 0.3 | 0.5 | 0.6 | 0.7 | 0.8 | 0.9 | 1.0 |

| **Setting:** | **2** | **2.2** | **2.4** | **2.6** | **2.8** | **3** | **3.2** | **3.4** | **3.6** |
|---|---|---|---|---|---|---|---|---|---|
| $k_v$-value: | 1.0 | 1.1 | 1.2 | 1.3 | 1.5 | 1.6 | 1.8 | 2.0 | 2.1 |
| cv-value: | 1.2 | 1.3 | 1.4 | 1.5 | 1.7 | 1.9 | 2.1 | 2.3 | 2.4 |

| **Setting:** | **3.8** | **4.0** | **4.2** | **4.4** | **4.6** | **4.8** | **4.9 = open** |
|---|---|---|---|---|---|---|---|
| $k_v$-value: | 2.3 | 2.4 | 2.4 | 2.5 | 2.5 | 2.6 | $k_{vs}$ = 2.6 |
| cv-value: | 2.7 | 2.8 | 2.8 | 2.9 | 2.9 | 3.0 | $c_{vs}$ = 3.0 |

**Flow Data V5032BLF, DN15**

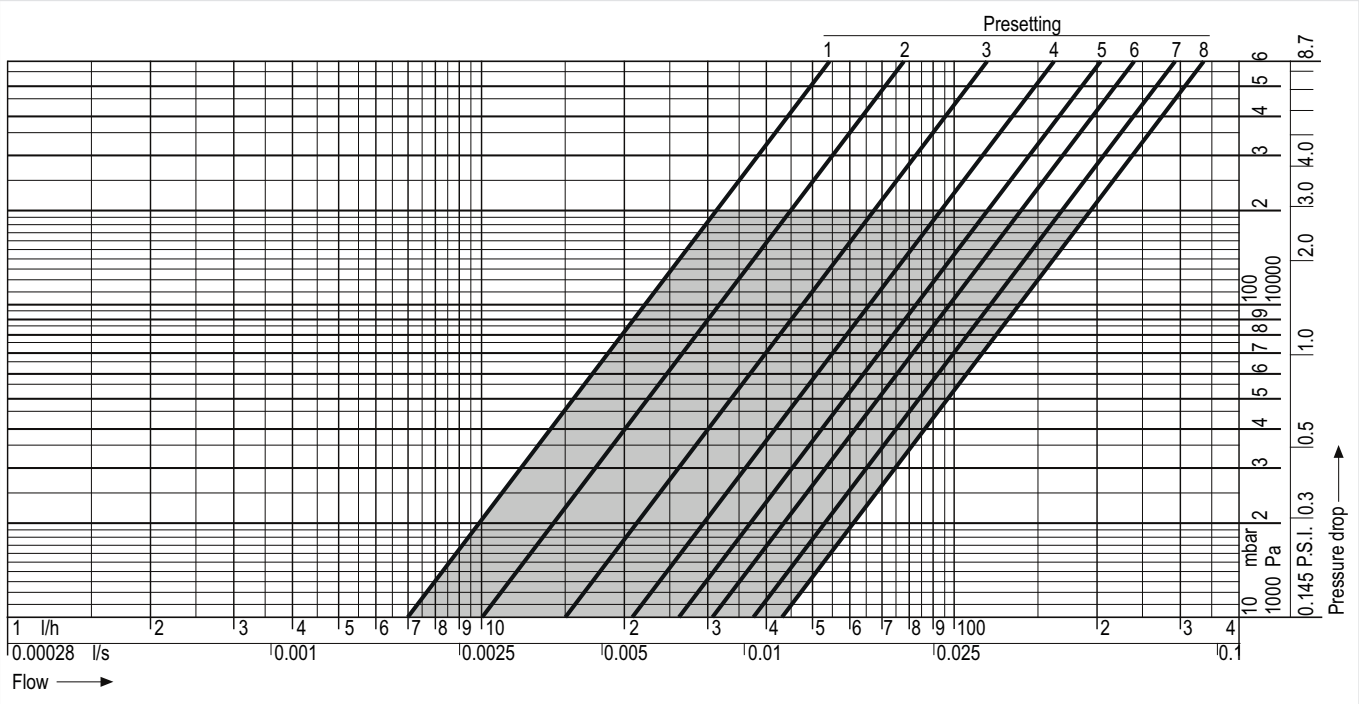


Note: Recommended range of application when used with actuator. MT4, M100 range, M4410E1510, M4410K1515 and M7410A1001

**Presetting values**

| Setting: | 1 | 2 | 3 | 4 | 5 | 6 | 7 | 8 |
|---|---|---|---|---|---|---|---|---|
| $k_v$-value: | 0.07 | 0.10 | 0.15 | 0.21 | 0.26 | 0.31 | 0.37 | 0.43 |
| cv-value: | 0.06 | 0.09 | 0.13 | 0.18 | 0.22 | 0.27 | 0.32 | 0.37 |

**Flow Data V5032B, DN20**

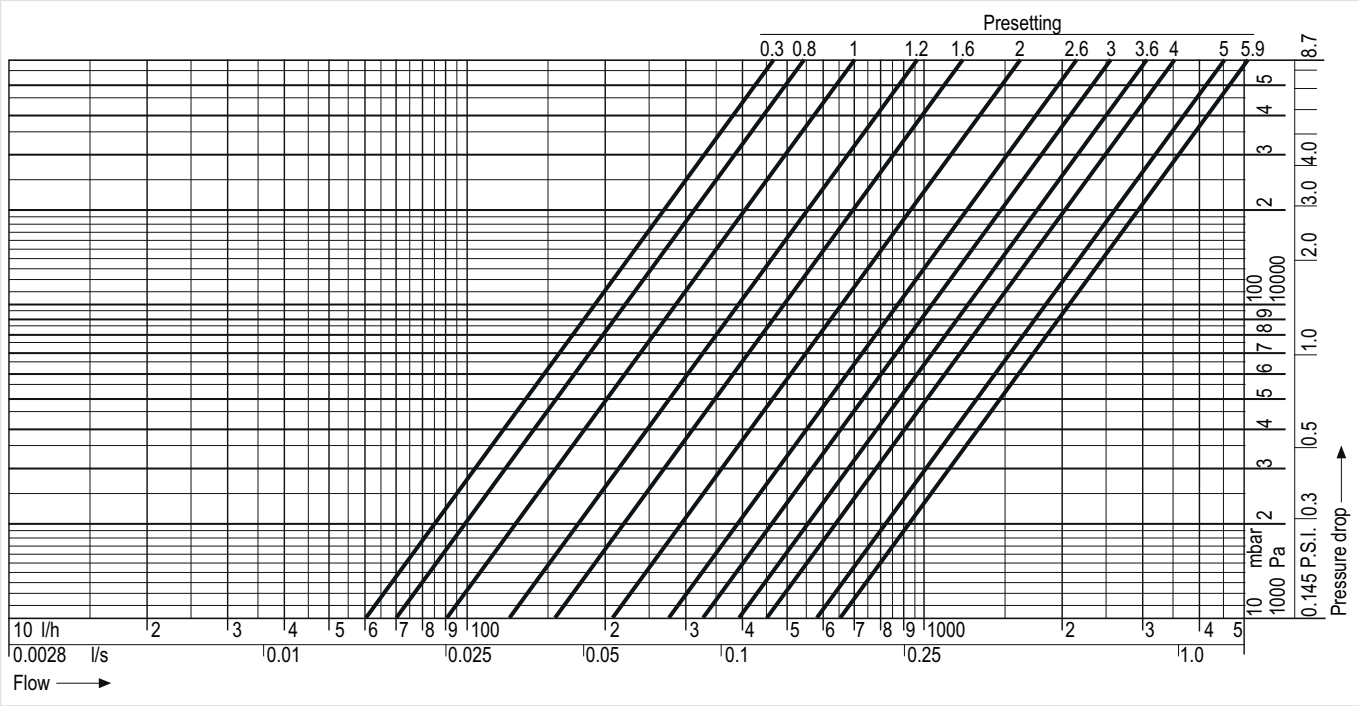


**Presetting values**

| **Setting:** | **0.3** | **0.4** | **0.6** | **0.8** | **1.0** | **1.2** | **1.4** | **1.6** | **1.8** |
|---|---|---|---|---|---|---|---|---|---|
| $k_v$-value: | 0.6 | 0.6 | 0.6 | 0.7 | 0.9 | 1.2 | 1.4 | 1.6 | 1.8 |
| cv-value: | 0.7 | 0.7 | 0.7 | 0.8 | 1.1 | 1.4 | 1.6 | 1.9 | 2.1 |

| **Setting:** | **2.0** | **2.2** | **2.4** | **2.6** | **2.8** | **3.0** | **3.2** | **3.4** | **3.6** |
|---|---|---|---|---|---|---|---|---|---|
| $k_v$-value: | 2.1 | 2.3 | 2.5 | 2.7 | 3.0 | 3.2 | 3.4 | 3.7 | 3.9 |
| cv-value: | 2.4 | 2.6 | 2.9 | 3.2 | 3.4 | 3.7 | 4.0 | 4.2 | 4.6 |

| **Setting:** | **3.8** | **4.0** | **4.2** | **4.4** | **4.6** | **4.8** | **5.0** | **5.2** | **5.4** |
|---|---|---|---|---|---|---|---|---|---|
| $k_v$-value: | 4.2 | 4.5 | 4.8 | 5.1 | 5.3 | 5.5 | 5.7 | 5.9 | 6.1 |
| cv-value: | 4.9 | 5.3 | 5.6 | 5.9 | 6.2 | 6.4 | 6.7 | 6.9 | 7.1 |

| **Setting:** | **5.6** | **5.8** | **5.9 = open** |
|---|---|---|---|
| $k_v$-value: | 6.3 | 6.5 | $k_{vs}$ = 6.5 |
| cv-value: | 7.3 | 7.5 | $c_{vs}$ = 7.6 |

**Flow Data V5032B, DN25**

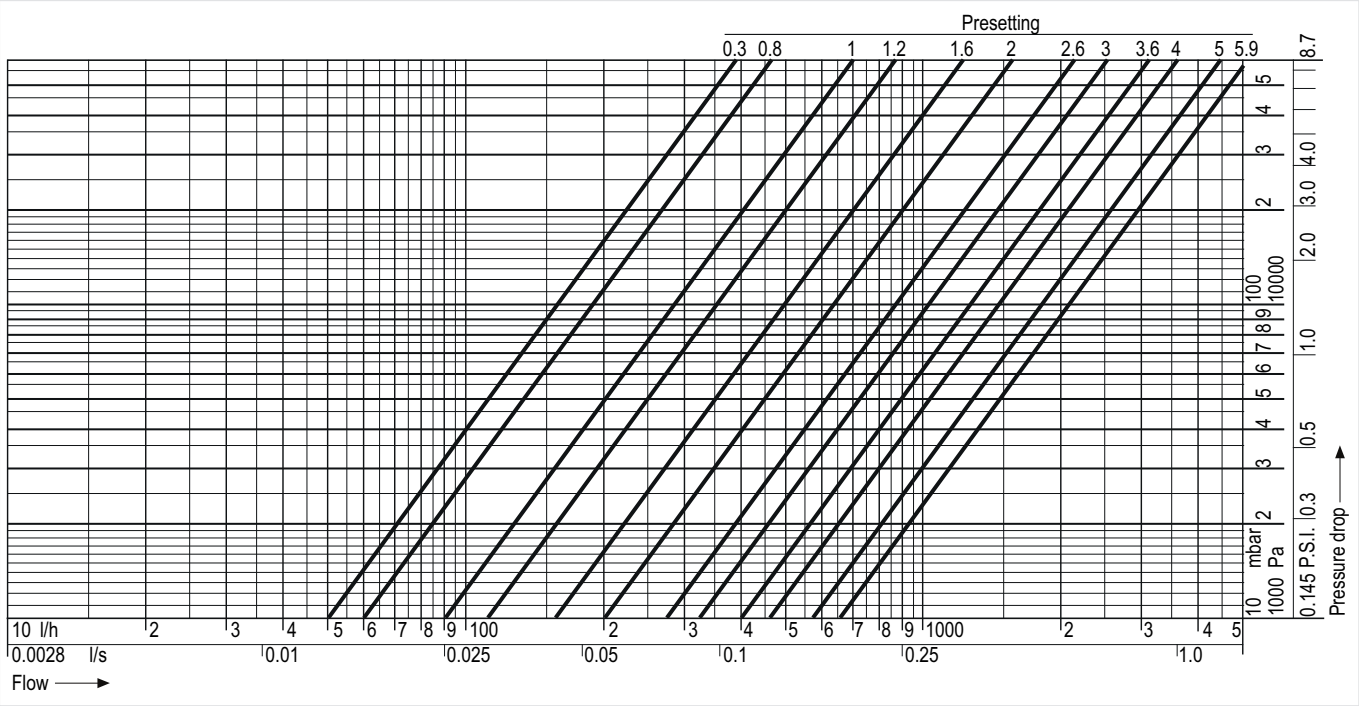


**Presetting values**

| **Setting:** | **0.3** | **0.4** | **0.6** | **0.8** | **1.0** | **1.2** | **1.4** | **1.6** | **1.8** |
|---|---|---|---|---|---|---|---|---|---|
| $k_v$-value: | 0.5 | 0.5 | 0.5 | 0.6 | 0.9 | 1.1 | 1.3 | 1.6 | 1.8 |
| cv-value: | 0.6 | 0.6 | 0.6 | 0.7 | 1.0 | 1.3 | 1.5 | 1.8 | 2.1 |

| **Setting:** | **2.0** | **2.2** | **2.4** | **2.6** | **2.8** | **3.0** | **3.2** | **3.4** | **3.6** |
|---|---|---|---|---|---|---|---|---|---|
| $k_v$-value: | 2.0 | 2.2 | 2.5 | 2.7 | 3.0 | 3.2 | 3.4 | 3.7 | 4.0 |
| cv-value: | 2.3 | 2.6 | 2.9 | 3.1 | 3.4 | 3.7 | 4.0 | 4.3 | 4.6 |

| **Setting:** | **3.8** | **4.0** | **4.2** | **4.4** | **4.6** | **4.8** | **5.0** | **5.2** | **5.4** |
|---|---|---|---|---|---|---|---|---|---|
| $k_v$-value: | 4.3 | 4.6 | 4.9 | 5.2 | 5.4 | 5.5 | 5.7 | 5.8 | 6.0 |
| cv-value: | 5.0 | 5.4 | 5.7 | 6.0 | 6.3 | 6.4 | 6.6 | 6.8 | 6.9 |

| **Setting:** | **5.6** | **5.8** | **5.9 = open** |
|---|---|---|---|
| $k_v$-value: | 6.2 | 6.5 | $k_{vs}$ = 6.6 |
| cv-value: | 7.2 | 7.5 | $c_{vs}$ = 7.6 |

**Flow Data V5032B, DN32**

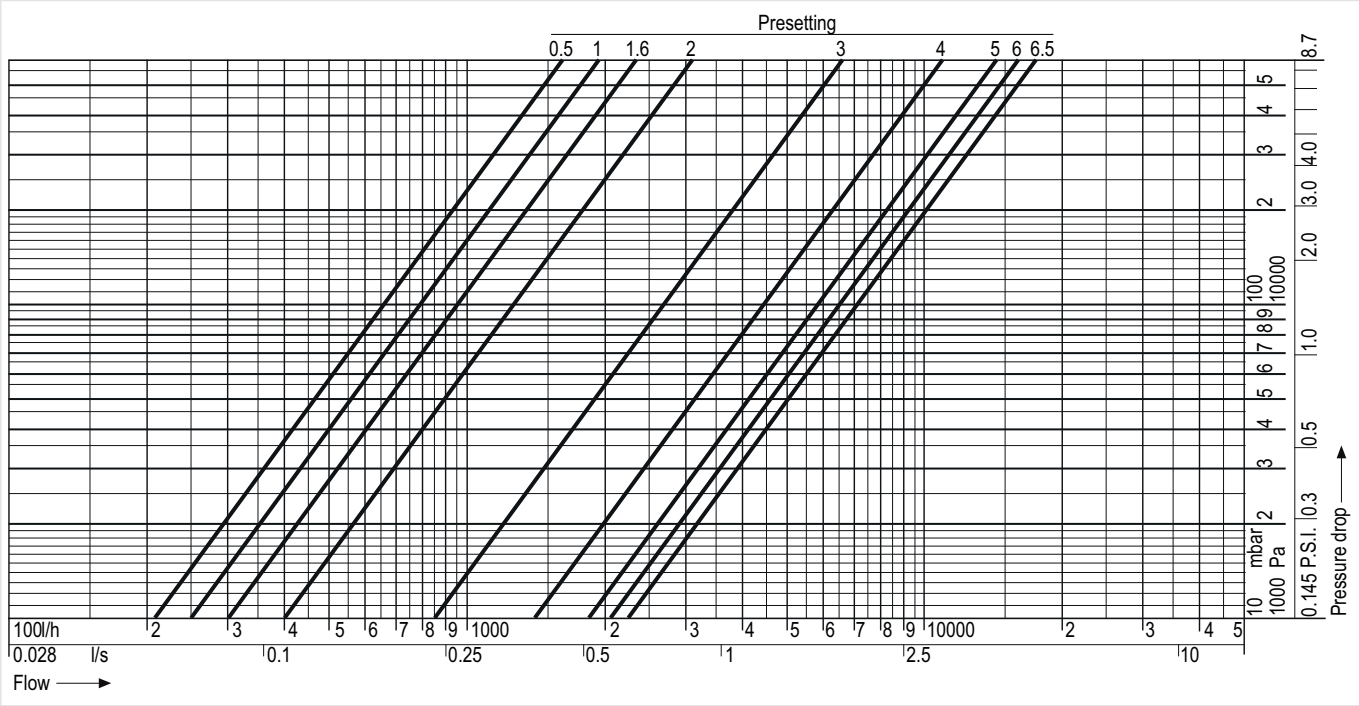


**Presetting values**

| **Setting:** | **0.5** | **1.0** | **1.2** | **1.4** | **1.5** | **1.6** | **1.8** | **2.0** | **2.2** |
|---|---|---|---|---|---|---|---|---|---|
| $k_v$-value: | 2.1 | 2.5 | 2.7 | 2.8 | 2.9 | 3.0 | 3.4 | 4.0 | 4.8 |
| cv-value: | 2.5 | 2.9 | 3.1 | 3.3 | 3.4 | 3.5 | 4.0 | 4.6 | 5.6 |

| **Setting:** | **2.4** | **2.6** | **2.8** | **3.0** | **3.2** | **3.4** | **3.6** | **3.8** | **4.0** |
|---|---|---|---|---|---|---|---|---|---|
| $k_v$-value: | 5.7 | 6.6 | 7.5 | 8.5 | 9.6 | 10.9 | 12.0 | 13.1 | 14.1 |
| cv-value: | 6.6 | 7.6 | 8.7 | 9.9 | 11.2 | 12.7 | 14.0 | 15.2 | 16.5 |

| **Setting:** | **4.2** | **4.4** | **4.6** | **4.8** | **5.0** | **5.2** | **5.4** | **5.6** | **5.8** |
|---|---|---|---|---|---|---|---|---|---|
| $k_v$-value: | 15.3 | 16.3 | 17.2 | 17.9 | 18.5 | 19.1 | 19.4 | 19.7 | 20.0 |
| cv-value: | 17.8 | 19.0 | 20.0 | 20.8 | 21.5 | 22.2 | 22.6 | 22.9 | 23.3 |

| **Setting:** | **6.0** | **6.2** | **6.4** | **6.5 = open** |
|---|---|---|---|---|
| $k_v$-value: | 20.5 | 21.0 | 21.6 | $k_{vs}$ = 21.9 |
| cv-value: | 23.9 | 24.4 | 25.1 | $c_{vs}$ = 25.5 |

**Flow Data V5032B, DN40**

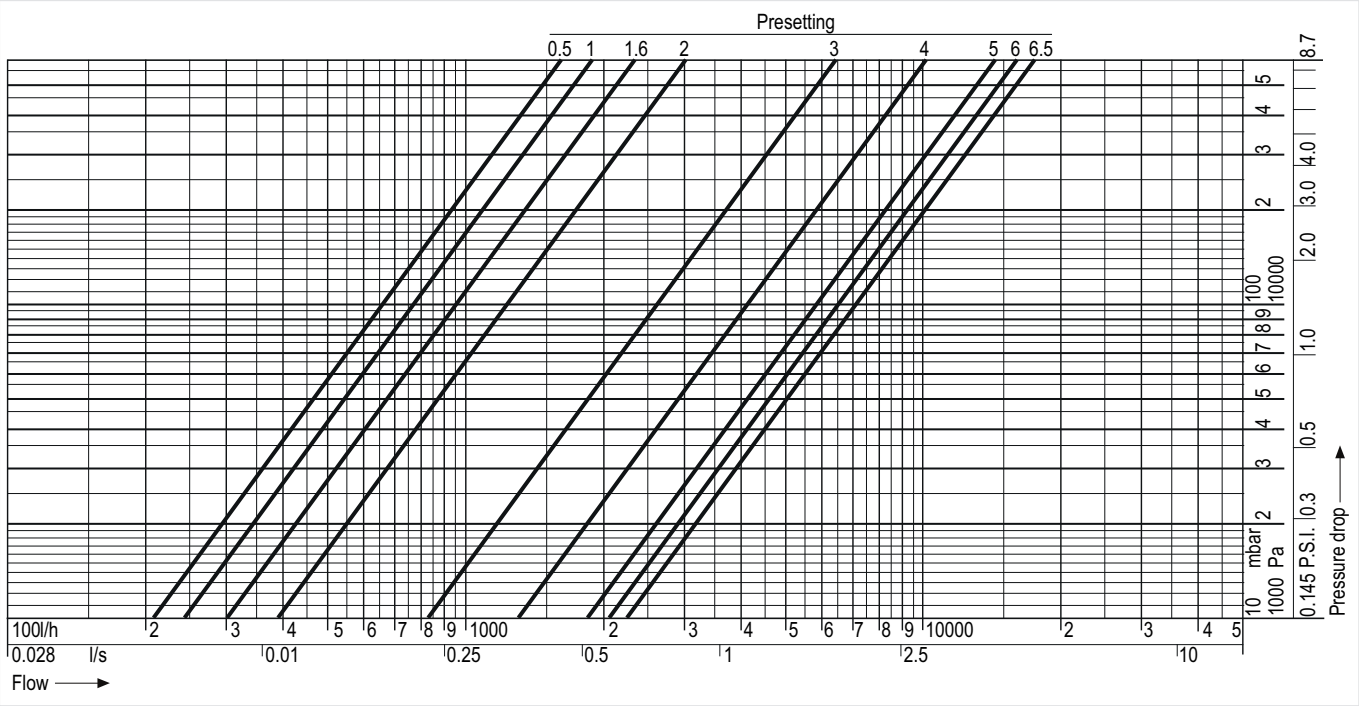


**Presetting values**

| **Setting:** | **0.5** | **1.0** | **1.2** | **1.4** | **1.5** | **1.6** | **1.8** | **2.0** | **2.2** |
|---|---|---|---|---|---|---|---|---|---|
| $k_v$-value: | 2.1 | 2.4 | 2.6 | 2.8 | 2.9 | 3.0 | 3.3 | 3.9 | 4.6 |
| cv-value: | 2.4 | 2.8 | 3.0 | 3.3 | 3.4 | 3.5 | 3.9 | 4.5 | 5.4 |

| **Setting:** | **2.4** | **2.6** | **2.8** | **3.0** | **3.2** | **3.4** | **3.6** | **3.8** | **4.0** |
|---|---|---|---|---|---|---|---|---|---|
| $k_v$-value: | 5.4 | 6.3 | 7.3 | 8.3 | 9.3 | 10.4 | 11.5 | 12.6 | 13.7 |
| cv-value: | 6.3 | 7.3 | 8.5 | 9.6 | 10.9 | 12.1 | 13.3 | 14.6 | 16.0 |

| **Setting:** | **4.2** | **4.4** | **4.6** | **4.8** | **5.0** | **5.2** | **5.4** | **5.6** | **5.8** |
|---|---|---|---|---|---|---|---|---|---|
| $k_v$-value: | 14.8 | 15.9 | 16.8 | 17.5 | 18.2 | 18.6 | 18.9 | 19.1 | 19.6 |
| cv-value: | 17.2 | 18.5 | 19.5 | 20.3 | 21.1 | 21.6 | 22.0 | 22.2 | 22.8 |

| **Setting:** | **6.0** | **6.2** | **6.4** | **6.5 = open** |
|---|---|---|---|---|
| $k_v$-value: | 20.1 | 20.6 | 21.1 | $k_{vs}$ = 21.2 |
| cv-value: | 23.4 | 23.9 | 24.5 | $c_{vs}$ = 24.6 |

**Flow Data V5032B, DN50**

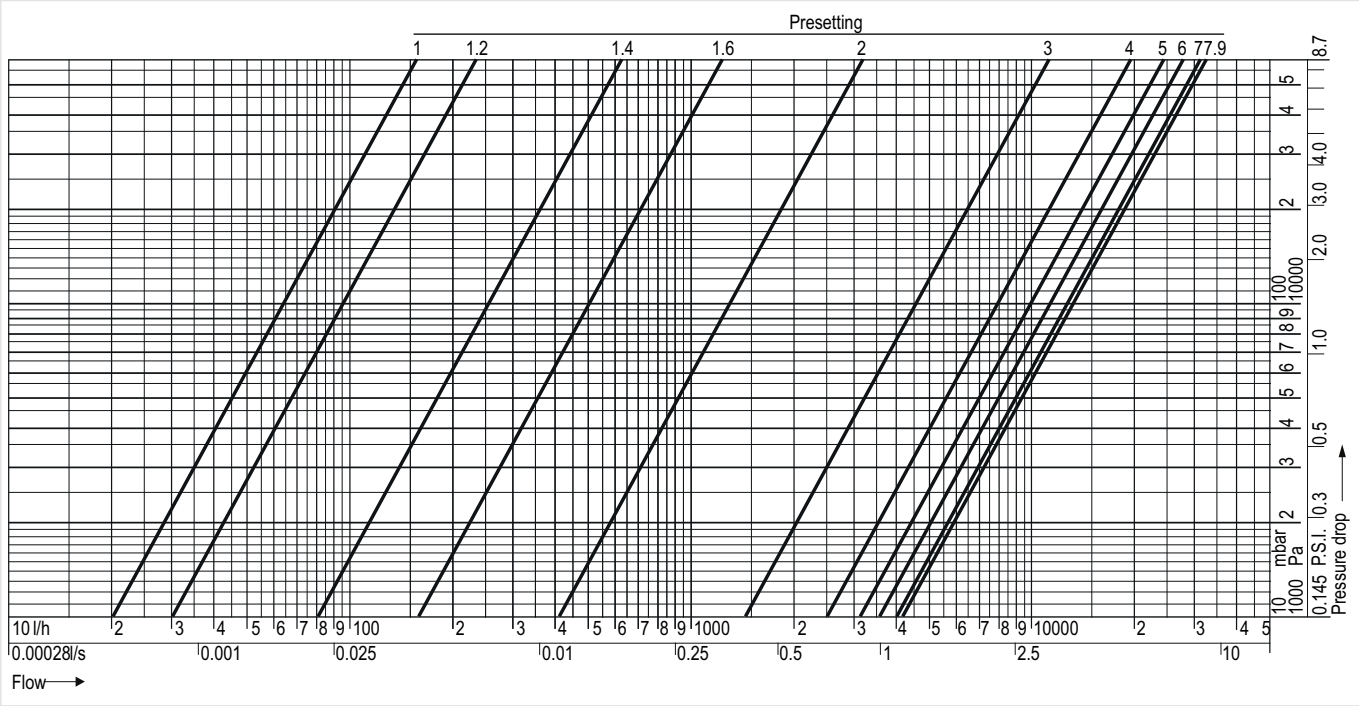


**Presetting values**

| **Setting:** | **1.0** | **1.2** | **1.4** | **1.6** | **1.8** | **2.0** | **2.2** | **2.4** | **2.6** |
|---|---|---|---|---|---|---|---|---|---|
| $k_v$-value: | 0.2 | 0.3 | 0.8 | 1.6 | 2.7 | 4.1 | 5.7 | 7.6 | 9.6 |
| cv-value: | 0.2 | 0.3 | 0.9 | 1.9 | 3.2 | 4.8 | 6.7 | 8.8 | 11.2 |

| **Setting:** | **2.8** | **3.0** | **3.2** | **3.4** | **3.6** | **3.8** | **4.0** | **4.2** | **4.4** |
|---|---|---|---|---|---|---|---|---|---|
| $k_v$-value: | 11.9 | 14.2 | 16.6 | 19.2 | 21.5 | 23.7 | 25.5 | 26.6 | 27.7 |
| cv-value: | 13.8 | 16.5 | 19.3 | 22.3 | 25.0 | 27.6 | 29.7 | 30.9 | 32.2 |

| **Setting:** | **4.6** | **4.8** | **5.0** | **5.2** | **5.4** | **5.6** | **5.8** | **6.0** | **6.2** |
|---|---|---|---|---|---|---|---|---|---|
| $k_v$-value: | 28.9 | 29.9 | 31.0 | 32.1 | 32.8 | 34.0 | 34.9 | 36.0 | 36.9 |
| cv-value: | 33.6 | 34.8 | 36.1 | 37.3 | 38.2 | 39.5 | 40.6 | 41.8 | 42.9 |

| **Setting:** | **6.4** | **6.6** | **6.8** | **7.0** | **7.2** | **7.4** | **7.6** | **7.9 = open** |
|---|---|---|---|---|---|---|---|---|
| $k_v$-value: | 37.9 | 38.8 | 39.7 | 40.6 | 41.0 | 41.5 | 41.6 | $k_{vs}$ = 41.5 |
| cv-value: | 44.1 | 45.1 | 46.1 | 47.2 | 47.7 | 48.3 | 48.4 | $c_{vs}$ = 48.3 |

**Flow Data V5032B, DN65**

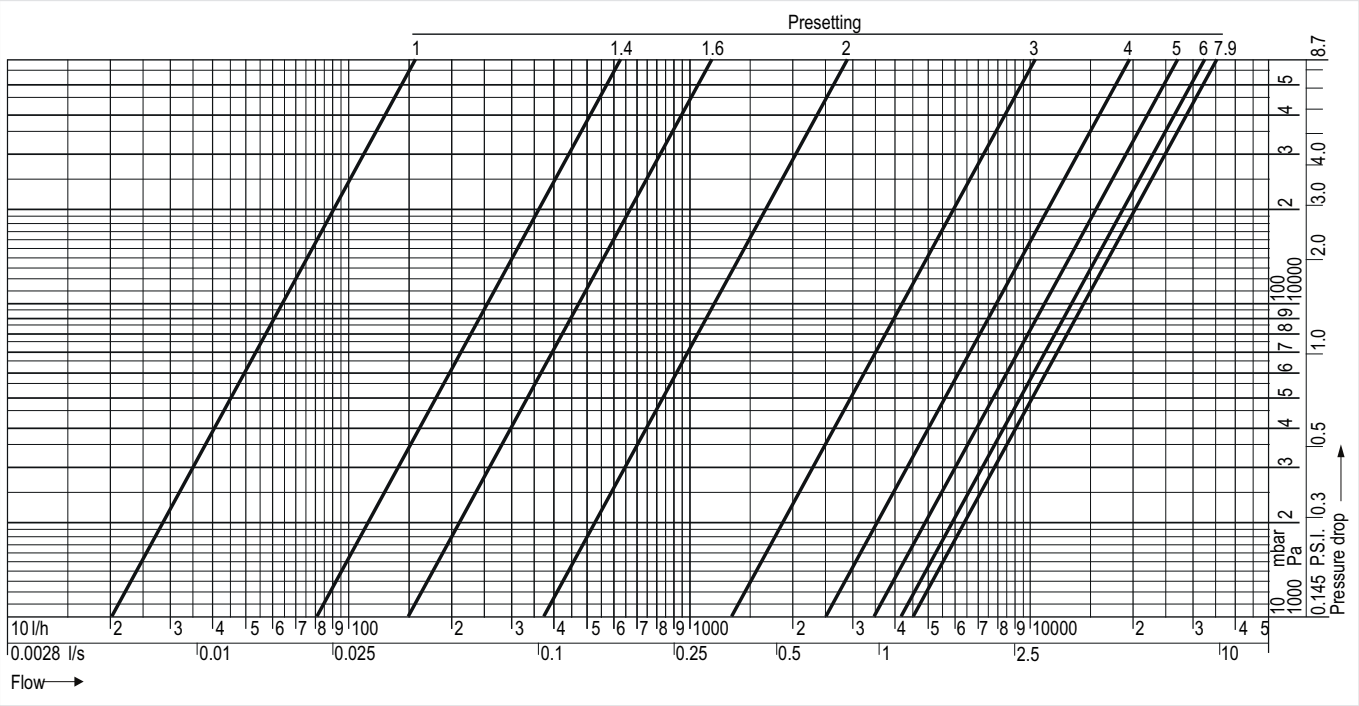


**Presetting values**

| **Setting:** | **1.0** | **1.2** | **1.4** | **1.6** | **1.8** | **2.0** | **2.2** | **2.4** | **2.6** |
|---|---|---|---|---|---|---|---|---|---|
| $k_v$-value: | 0.2 | 0.2 | 0.8 | 1.5 | 2.5 | 3.7 | 5.2 | 7.0 | 9.0 |
| cv-value: | 0.3 | 0.2 | 0.9 | 1.8 | 2.9 | 4.4 | 6.1 | 8.1 | 10.4 |

| **Setting:** | **2.8** | **3.0** | **3.2** | **3.4** | **3.6** | **3.8** | **4.0** | **4.2** | **4.4** |
|---|---|---|---|---|---|---|---|---|---|
| $k_v$-value: | 11.1 | 13.4 | 15.8 | 18.1 | 20.5 | 22.9 | 25.1 | 27.3 | 29.3 |
| cv-value: | 12.9 | 15.6 | 18.3 | 21.1 | 23.9 | 26.6 | 29.2 | 31.7 | 34.1 |

| **Setting:** | **4.6** | **4.8** | **5.0** | **5.2** | **5.4** | **5.6** | **5.8** | **6.0** | **6.2** |
|---|---|---|---|---|---|---|---|---|---|
| $k_v$-value: | 31.3 | 33.1 | 34.8 | 36.4 | 37.9 | 39.2 | 40.4 | 41.4 | 42.3 |
| cv-value: | 36.4 | 38.5 | 40.5 | 42.4 | 44.1 | 45.6 | 46.9 | 48.1 | 49.1 |

| **Setting:** | **6.4** | **6.6** | **6.8** | **7.0** | **7.2** | **7.4** | **7.6** | **7.9 = open** |
|---|---|---|---|---|---|---|---|---|
| $k_v$-value: | 43.0 | 43.6 | 44.0 | 44.4 | 44.7 | 44.9 | 45.1 | $k_{vs}$ = 45.3 |
| cv-value: | 50.0 | 50.7 | 51.2 | 51.7 | 52.0 | 52.2 | 52.4 | $c_{vs}$ = 52.6 |

**Flow Data V5032B, DN80**

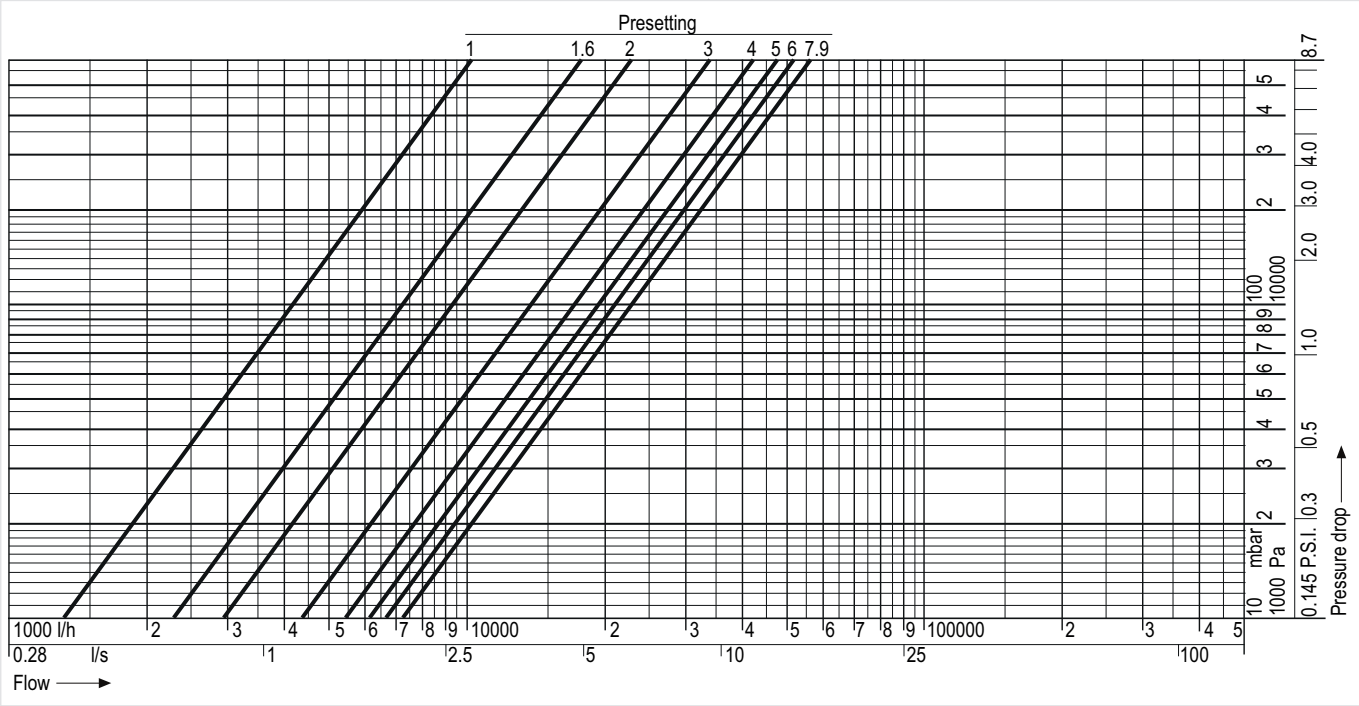


**Presetting values**

| **Setting:** | **1.0** | **1.2** | **1.4** | **1.6** | **1.8** | **2.0** | **2.2** | **2.4** | **2.6** |
|---|---|---|---|---|---|---|---|---|---|
| $k_v$-value: | 13.9 | 16.9 | 20.0 | 23.1 | 26.2 | 29.3 | 32.3 | 35.3 | 38.1 |
| cv-value: | 16.2 | 19.7 | 23.2 | 26.8 | 30.4 | 34.0 | 37.6 | 41.0 | 44.3 |

| **Setting:** | **2.8** | **3.0** | **3.2** | **3.4** | **3.6** | **3.8** | **4.0** | **4.2** | **4.4** |
|---|---|---|---|---|---|---|---|---|---|
| $k_v$-value: | 40.8 | 43.4 | 45.9 | 48.2 | 50.4 | 52.4 | 54.3 | 56.0 | 57.6 |
| cv-value: | 47.5 | 50.5 | 53.4 | 56.1 | 58.6 | 60.9 | 63.1 | 65.1 | 67.0 |

| **Setting:** | **4.6** | **4.8** | **5.0** | **5.2** | **5.4** | **5.6** | **5.8** | **6.0** | **6.2** |
|---|---|---|---|---|---|---|---|---|---|
| $k_v$-value: | 59.1 | 60.5 | 61.8 | 62.9 | 64.0 | 65.0 | 65.9 | 66.8 | 67.6 |
| cv-value: | 68.7 | 70.4 | 71.8 | 73.2 | 74.4 | 75.6 | 76.7 | 77.7 | 78.6 |

| **Setting:** | **6.4** | **6.6** | **6.8** | **7.0** | **7.2** | **7.4** | **7.6** | **7.9 = open** |
|---|---|---|---|---|---|---|---|---|
| $k_v$-value: | 68.3 | 69.0 | 69.7 | 70.3 | 71.0 | 71.6 | 72.1 | $k_{vs}$ = 73.0 |
| cv-value: | 79.5 | 80.3 | 81.1 | 81.8 | 82.5 | 83.2 | 83.9 | $c_{vs}$ = 84.9 |

## KV-VALUES FOR MEASURING WITH NON-RESIDEO DEVICES

### V5032B (DN10)

| Setting: | 0.2 | 0.3 | 0.4 | 0.5 | 0.6 | 0.7 | 0.8 | 0.9 | 1.0 |
|---|---|---|---|---|---|---|---|---|---|
| $k_v$-value: | 0.09 | 0.099 | 0.099 | 0.101 | 0.103 | 0.109 | 0.119 | 0.134 | 0.15 |
| cv-value: | 0.09 | 0.099 | 0.099 | 0.101 | 0.103 | 0.109 | 0.119 | 0.134 | 0.15 |

| Setting: | 1.2 | 1.4 | 1.6 | 1.8 | 2.0 | 2.2 | 2.4 | 2.6 | 2.8 |
|---|---|---|---|---|---|---|---|---|---|
| $k_v$-value: | 0.182 | 0.215 | 0.243 | 0.269 | 0.295 | 0.319 | 0.344 | 0.369 | 0.392 |
| cv-value: | 0.184 | 0.217 | 0.246 | 0.273 | 0.302 | 0.327 | 0.355 | 0.382 | 0.409 |

| Setting: | 3.0 | 3.2 | 3.4 | 3.6 | 3.8 | 4.0 | 4.2 | 4.4 | 4.6 |
|---|---|---|---|---|---|---|---|---|---|
| $k_v$-value: | 0.414 | 0.435 | 0.458 | 0.486 | 0.517 | 0.554 | 0.589 | 0.619 | 0.631 |
| cv-value: | 0.434 | 0.461 | 0.488 | 0.524 | 0.563 | 0.614 | 0.668 | 0.714 | 0.733 |

| Setting: | 4.8 | 4.9 = open |
|---|---|---|
| $k_v$-value: | 0.632 | $k_{vs}$ = 0.631 |
| cv-value: | 0.732 | $c_{vs}$ = 0.729 |

### V5032B (DN15)

| Setting: | 0.3 | 0.4 | 0.6 | 0.8 | 1.0 | 1.2 | 1.4 | 1.6 | 1.8 |
|---|---|---|---|---|---|---|---|---|---|
| $k_v$-value: | 0.3 | 0.3 | 0.3 | 0.4 | 0.5 | 0.6 | 0.7 | 0.8 | 1.0 |
| cv-value: | 0.3 | 0.3 | 0.3 | 0.5 | 0.6 | 0.7 | 0.8 | 0.9 | 1.2 |

| Setting: | 2.0 | 2.2 | 2.4 | 2.6 | 2.8 | 3.0 | 3.2 | 3.4 | 3.6 |
|---|---|---|---|---|---|---|---|---|---|
| $k_v$-value: | 1.1 | 1.2 | 1.4 | 1.5 | 1.7 | 1.9 | 2.1 | 2.4 | 2.7 |
| cv-value: | 1.3 | 1.4 | 1.6 | 1.7 | 2.0 | 2.2 | 2.4 | 2.8 | 3.1 |

| Setting: | 3.8 | 4.0 | 4.2 | 4.4 | 4.6 | 4.8 | 4.9 = open |
|---|---|---|---|---|---|---|---|
| $k_v$-value: | 2.9 | 3.2 | 3.4 | 3.6 | 3.8 | 4.1 | $k_{vs}$ = 4.3 |
| cv-value: | 3.4 | 3.7 | 4.0 | 4.2 | 4.4 | 4.8 | $c_{vs}$ = 5.0 |

### V5032BLF (DN15)

| Setting: | 1 | 2 | 3 | 4 | 5 | 6 | 7 | 8 |
|---|---|---|---|---|---|---|---|---|
| $k_v$-value: | 0.07 | 0.10 | 0.15 | 0.21 | 0.26 | 0.31 | 0.37 | 0.43 |
| cv-value: | 0.06 | 0.09 | 0.13 | 0.18 | 0.22 | 0.27 | 0.32 | 0.37 |

### V5032B (DN20)

| Setting: | 0.3 | 0.4 | 0.6 | 0.8 | 1.0 | 1.2 | 1.4 | 1.6 | 1.8 |
|---|---|---|---|---|---|---|---|---|---|
| $k_v$-value: | 0.6 | 0.6 | 0.6 | 0.7 | 1.0 | 1.2 | 1.5 | 1.7 | 2.0 |
| cv-value: | 0.7 | 0.7 | 0.7 | 0.9 | 1.1 | 1.4 | 1.7 | 2.0 | 2.3 |

| Setting: | 2.0 | 2.2 | 2.4 | 2.6 | 2.8 | 3.0 | 3.2 | 3.4 | 3.6 |
|---|---|---|---|---|---|---|---|---|---|
| $k_v$-value: | 2.3 | 2.5 | 2.8 | 3.1 | 3.3 | 3.6 | 3.8 | 4.1 | 4.4 |
| cv-value: | 2.6 | 2.9 | 3.2 | 3.6 | 3.9 | 4.2 | 4.4 | 4.7 | 5.1 |

| Setting: | 3.8 | 4.0 | 4.2 | 4.4 | 4.6 | 4.8 | 5.0 | 5.2 | 5.4 |
|---|---|---|---|---|---|---|---|---|---|
| $k_v$-value: | 4.8 | 5.2 | 5.6 | 5.9 | 6.3 | 6.6 | 6.9 | 7.2 | 7.6 |
| cv-value: | 5.6 | 6.1 | 6.5 | 6.9 | 7.4 | 7.7 | 8.0 | 8.4 | 8.8 |

| Setting: | 5.6 | 5.8 | 5.9 = open |
|---|---|---|---|
| $k_v$-value: | 7.9 | 8.2 | $k_{vs}$ = 8.4 |
| cv-value: | 9.2 | 9.6 | $c_{vs}$ = 9.8 |

**V5032B (DN25)**

| Setting: | 0.3 | 0.4 | 0.6 | 0.8 | 1.0 | 1.2 | 1.4 | 1.6 | 1.8 |
|---|---|---|---|---|---|---|---|---|---|
| $k_v$-value: | 0.5 | 0.6 | 0.6 | 0.6 | 0.9 | 1.1 | 1.4 | 1.7 | 1.9 |
| cv-value: | 0.6 | 0.8 | 0.8 | 0.8 | 1.1 | 1.3 | 1.6 | 1.9 | 2.2 |

| Setting: | 2.0 | 2.2 | 2.4 | 2.6 | 2.8 | 3.0 | 3.2 | 3.4 | 3.6 |
|---|---|---|---|---|---|---|---|---|---|
| $k_v$-value: | 2.2 | 2.4 | 2.7 | 2.9 | 3.2 | 3.5 | 3.7 | 3.9 | 4.2 |
| cv-value: | 2.5 | 2.8 | 3.1 | 3.4 | 3.7 | 4.0 | 4.3 | 4.5 | 4.9 |

| Setting: | 3.8 | 4.0 | 4.2 | 4.4 | 4.6 | 4.8 | 5.0 | 5.2 | 5.4 |
|---|---|---|---|---|---|---|---|---|---|
| $k_v$-value: | 4.4 | 4.7 | 5.1 | 5.5 | 5.8 | 6.0 | 6.2 | 6.4 | 6.5 |
| cv-value: | 5.1 | 5.5 | 6.0 | 6.4 | 6.8 | 7.0 | 7.2 | 7.4 | 7.5 |

| Setting: | 5.6 | 5.8 | 5.9 = open |
|---|---|---|---|
| $k_v$-value: | 6.8 | 7.3 | $k_{vs}$ = 7.4 |
| cv-value: | 7.9 | 8.4 | $c_{vs}$ = 8.6 |

**V5032B (DN32)**

| Setting: | 0.5 | 1.0 | 1.2 | 1.4 | 1.5 | 1.6 | 1.8 | 2.0 | 2.2 |
|---|---|---|---|---|---|---|---|---|---|
| $k_v$-value: | 2.1 | 2.5 | 2.7 | 2.9 | 3.0 | 3.1 | 3.4 | 4.1 | 4.9 |
| cv-value: | 2.5 | 2.9 | 3.1 | 3.4 | 3.5 | 3.6 | 4.0 | 4.8 | 5.7 |

| Setting: | 2.4 | 2.6 | 2.8 | 3.0 | 3.2 | 3.4 | 3.6 | 3.8 | 4.0 |
|---|---|---|---|---|---|---|---|---|---|
| $k_v$-value: | 5.8 | 6.7 | 7.6 | 8.7 | 9.9 | 11.4 | 13.2 | 15.2 | 17.3 |
| cv-value: | 6.7 | 7.8 | 8.9 | 10.1 | 11.5 | 13.3 | 15.3 | 17.7 | 20.1 |

| Setting: | 4.2 | 4.4 | 4.6 | 4.8 | 5.0 | 5.2 | 5.4 | 5.6 | 5.8 |
|---|---|---|---|---|---|---|---|---|---|
| $k_v$-value: | 19.4 | 21.3 | 22.5 | 23.1 | 22.6 | 22.0 | 21.1 | 21.0 | 20.1 |
| cv-value: | 22.5 | 24.8 | 26.2 | 26.9 | 26.3 | 25.5 | 24.6 | 24.5 | 23.7 |

| Setting: | 6.0 | 6.2 | 6.4 | 6.5 = open |
|---|---|---|---|---|
| $k_v$-value: | 20.7 | 21.3 | 22.2 | $k_{vs}$ = 23.1 |
| cv-value: | 24.0 | 24.7 | 25.8 | $c_{vs}$ = 26.8 |

**V5032B (DN40)**

| Setting: | 0.5 | 1.0 | 1.2 | 1.4 | 1.5 | 1.6 | 1.8 | 2.0 | 2.2 |
|---|---|---|---|---|---|---|---|---|---|
| $k_v$-value: | 2.1 | 2.4 | 2.6 | 2.8 | 2.9 | 3.0 | 3.4 | 3.9 | 4.7 |
| cv-value: | 2.4 | 2.8 | 3.1 | 3.3 | 3.4 | 3.5 | 3.9 | 4.6 | 5.4 |

| Setting: | 2.4 | 2.6 | 2.8 | 3.0 | 3.2 | 3.4 | 3.6 | 3.8 | 4.0 |
|---|---|---|---|---|---|---|---|---|---|
| $k_v$-value: | 5.5 | 6.3 | 7.3 | 8.3 | 9.4 | 10.6 | 12.1 | 14.0 | 16.5 |
| cv-value: | 6.4 | 7.4 | 8.4 | 9.6 | 10.9 | 12.3 | 14.0 | 16.3 | 19.1 |

| Setting: | 4.2 | 4.4 | 4.6 | 4.8 | 5.0 | 5.2 | 5.4 | 5.6 | 5.8 |
|---|---|---|---|---|---|---|---|---|---|
| $k_v$-value: | 19.1 | 21.2 | 22.7 | 23.3 | 23.3 | 22.7 | 21.5 | 20.0 | 19.6 |
| cv-value: | 22.2 | 24.6 | 26.3 | 27.1 | 27.0 | 26.4 | 25.0 | 23.3 | 22.8 |

| Setting: | 6.0 | 6.2 | 6.4 | 6.5 = open |
|---|---|---|---|---|
| $k_v$-value: | 19.8 | 20.4 | 21.3 | $k_{vs}$ = 21.4 |
| cv-value: | 23.0 | 23.7 | 24.8 | $c_{vs}$ = 24.9 |

**V5032B (DN50)**

| Setting: | 1.0 | 1.2 | 1.4 | 1.6 | 1.8 | 2.0 | 2.2 | 2.4 | 2.6 |
|---|---|---|---|---|---|---|---|---|---|
| $k_v$-value: | 0.2 | 0.3 | 0.8 | 1.6 | 2.8 | 4.3 | 6.0 | 8.2 | 10.7 |
| cv-value: | 0.2 | 0.3 | 0.9 | 1.9 | 3.2 | 4.9 | 7.0 | 9.5 | 12.4 |

| Setting: | 2.8 | 3.0 | 3.2 | 3.4 | 3.6 | 3.8 | 4.0 | 4.2 | 4.4 |
|---|---|---|---|---|---|---|---|---|---|
| $k_v$-value: | 13.6 | 17.1 | 20.8 | 24.8 | 28.8 | 31.6 | 33.0 | 33.2 | 33.3 |
| cv-value: | 15.8 | 19.8 | 24.2 | 28.9 | 33.5 | 36.7 | 38.4 | 38.6 | 38.7 |

| Setting: | 4.6 | 4.8 | 5.0 | 5.2 | 5.4 | 5.6 | 5.8 | 6.0 | 6.2 |
|---|---|---|---|---|---|---|---|---|---|
| $k_v$-value: | 33.3 | 33.9 | 34.9 | 35.8 | 36.4 | 38.0 | 39.8 | 42.1 | 44.2 |
| cv-value: | 38.7 | 39.4 | 40.6 | 41.7 | 42.3 | 44.1 | 46.2 | 48.9 | 51.4 |

| Setting: | 6.4 | 6.6 | 6.8 | 7.0 | 7.2 | 7.4 | 7.6 | 7.9 = open |
|---|---|---|---|---|---|---|---|---|
| $k_v$-value: | 45.7 | 47.1 | 48.7 | 50.4 | 51.8 | 50.7 | 48.8 | $k_{vs}$ = 46.9 |
| cv-value: | 53.2 | 54.7 | 56.6 | 58.6 | 60.2 | 59.0 | 56.7 | $c_{vs}$ = 54.6 |

**V5032B (DN65)**

| Setting: | 1.0 | 1.2 | 1.4 | 1.6 | 1.8 | 2.0 | 2.2 | 2.4 | 2.6 |
|---|---|---|---|---|---|---|---|---|---|
| $k_v$-value: | 0.3 | 0.5 | 1.1 | 1.6 | 2.4 | 3.5 | 4.9 | 6.6 | 8.7 |
| cv-value: | 0.4 | 0.6 | 1.2 | 1.9 | 2.8 | 4.0 | 5.7 | 7.7 | 10.1 |

| Setting: | 2.8 | 3.0 | 3.2 | 3.4 | 3.6 | 3.8 | 4.0 | 4.2 | 4.4 |
|---|---|---|---|---|---|---|---|---|---|
| $k_v$-value: | 11.0 | 13.4 | 15.8 | 18.2 | 20.5 | 22.6 | 24.7 | 26.7 | 28.8 |
| cv-value: | 12.8 | 15.6 | 18.4 | 21.1 | 23.8 | 26.3 | 28.7 | 31.1 | 33.4 |

| Setting: | 4.6 | 4.8 | 5.0 | 5.2 | 5.4 | 5.6 | 5.8 | 6.0 | 6.2 |
|---|---|---|---|---|---|---|---|---|---|
| $k_v$-value: | 30.8 | 33.0 | 35.2 | 37.5 | 39.7 | 41.7 | 43.3 | 44.6 | 45.5 |
| cv-value: | 35.8 | 38.4 | 41.0 | 43.6 | 46.2 | 48.4 | 50.4 | 51.8 | 52.9 |

| Setting: | 6.4 | 6.6 | 6.8 | 7.0 | 7.2 | 7.4 | 7.6 | 7.9 = open |
|---|---|---|---|---|---|---|---|---|
| $k_v$-value: | 46.2 | 46.6 | 46.9 | 47.1 | 47.2 | 47.3 | 47.3 | $k_{vs}$ = 47.4 |
| cv-value: | 53.7 | 54.2 | 54.5 | 54.7 | 54.9 | 55.0 | 55.0 | $c_{vs}$ = 55.1 |

**V5032B (DN80)**

| Setting: | 1.0 | 1.2 | 1.4 | 1.6 | 1.8 | 2.0 | 2.2 | 2.4 | 2.6 |
|---|---|---|---|---|---|---|---|---|---|
| $k_v$-value: | 13.9 | 16.7 | 19.8 | 13.0 | 26.2 | 29.6 | 32.9 | 36.2 | 39.4 |
| cv-value: | 16.2 | 19.5 | 23.0 | 26.7 | 30.5 | 34.4 | 38.2 | 42.1 | 45.8 |

| Setting: | 2.8 | 3.0 | 3.2 | 3.4 | 3.6 | 3.8 | 4.0 | 4.2 | 4.4 |
|---|---|---|---|---|---|---|---|---|---|
| $k_v$-value: | 42.5 | 45.6 | 48.5 | 51.3 | 54.0 | 56.5 | 58.9 | 61.2 | 63.3 |
| cv-value: | 49.4 | 53.0 | 56.4 | 59.7 | 62.8 | 65.7 | 68.5 | 71.2 | 73.6 |

| Setting: | 4.6 | 4.8 | 5.0 | 5.2 | 5.4 | 5.6 | 5.8 | 6.0 | 6.2 |
|---|---|---|---|---|---|---|---|---|---|
| $k_v$-value: | 65.2 | 67.1 | 68.7 | 70.3 | 71.7 | 73.0 | 74.1 | 75.2 | 76.1 |
| cv-value: | 75.9 | 78.0 | 79.9 | 81.7 | 83.3 | 84.8 | 86.2 | 87.4 | 88.5 |

| Setting: | 6.4 | 6.6 | 6.8 | 7.0 | 7.2 | 7.4 | 7.6 | 7.9 = open |
|---|---|---|---|---|---|---|---|---|
| $k_v$-value: | 76.9 | 77.7 | 78.4 | 78.9 | 79.5 | 79.9 | 80.3 | $k_{vs}$ = 80.9 |
| cv-value: | 89.5 | 90.3 | 91.1 | 91.8 | 92.4 | 92.9 | 93.4 | $c_{vs}$ = 91.0 |

# DIMENSIONS

## V5032BLF (DN15)

**Overview**

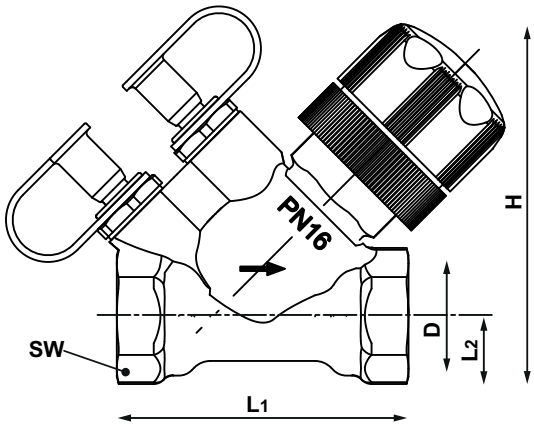


| Parameter | | Values |
|---|---|---|
| Connection sizes: | R | $^1/_2$" |
| Nominal sizes: | DN | 15 |
| Dimensions: | D | Rp$^1/_2$" |
| | H | 82 |
| | $L_1$ | 65 |
| | $L_2$ | 15 |
| | SW | 27 |

Note: All dimensions in mm unless stated otherwise.

Note: Dimension 'H' refers to fully open valve.

## V5032B (DN10 to DN80)

**Overview**

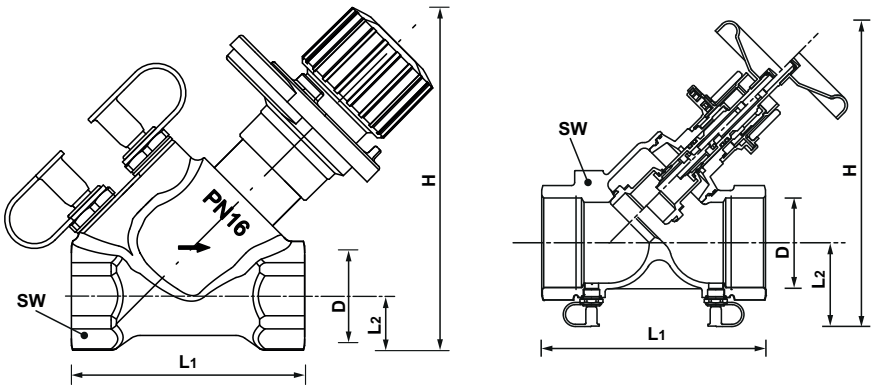


DN10 - DN50 DN65 - DN80

| Parameter | | Values | | | | | | | | |
|---|---|---|---|---|---|---|---|---|---|---|
| Connection sizes: | R | $^3/_8$" | $^1/_2$" | $^3/_4$" | 1" | 1$^1/_4$" | 1$^1/_2$" | 2" | 2$^1/_2$" | 3" |
| Nominal sizes: | DN | 10 | 15 | 20 | 25 | 32 | 40 | 50 | 65 | 80 |
| Dimensions: | D | Rp$^3/_8$" | Rp$^1/_2$" | Rp$^3/_4$" | Rp1" | Rp1$^1/_4$" | Rp1$^1/_2$" | Rp2" | Rp2$^1/_2$" | Rp3" |
| | H | 92 | 101 | 116 | 121 | 160 | 164 | 192 | 195 | 210 |
| | $L_1$ | 65 | 65 | 75 | 90 | 110 | 120 | 150 | 180 | 200 |
| | $L_2$ | 12.5 | 15 | 18 | 22 | 27 | 30 | 38 | 68 | 73 |
| | SW | 22 | 27 | 32 | 41 | 50 | 55 | 70 | 85 | 100 |

Note: All dimensions in mm unless stated otherwise.

Note: Dimension 'H' refers to fully open valve.

## ORDERING INFORMATION

The following tables contain all the information you need to make an order of an item of your choice. When ordering, please always state the type, the ordering or the part number.

### Options

| DN: | $k_{vs}$ ($c_{vs}$)-value: | Weight: (g) | OS-No.: |
|---|---|---|---|
| DN10 | 0.63 (0.73) | 400 | V5032Y0010B |
| DN15 | 2.6 (3.0) | 425 | V5032Y0015B |
| DN15 BLF | 0.43 (0.5) | 350 | V5032Y0015BLF |
| DN20 | 6.5 (7.5) | 560 | V5032Y0020B |
| DN25 | 6.6 (7.6) | 720 | V5032Y0025B |
| DN32 | 21.9 (25.3) | 1230 | V5032Y0032B |
| DN40 | 21.2 (24.5) | 1320 | V5032Y0040B |
| DN50 | 41.5 (48.0) | 2380 | V5032Y0050B |
| DN65 | 45.2 (52.6) | 2300 | V5032Y0065B |
| DN80 | 73.0 (84.9) | 2300 | V5032Y0080B |

### Accessories

| | Description | | Dimension | Part No. |
|---|---|---|---|---|
| 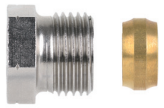 | **FIG1/2CS** | **Compression fitting for COPPER and STEEL pipe**<br>Consisting of compression nut and compression ring. For valves with internal thread.<br>Note: Support inserts have to be used for copper or soft steel pipe with 1.0 mm wall thickness. Max. operating temperature 120 °C, max. operating pressure 10 bar. | | |
| | | 1/2", DN15 | 10 mm | FIG1/2CS10 |
| | | 1/2", DN15 | 12 mm | FIG1/2CS12 |
| | | 1/2", DN15 | 14 mm | FIG1/2CS14 |
| | | 1/2", DN15 | 15 mm | FIG1/2CS15 |
| | | 1/2", DN15 (10pcs.) | 15 mm | FIG1/2CS15 - 10 |
| | | 1/2", DN15 | 16 mm | FIG1/2CS16 |
| | | 3/4", DN20 | 18 mm | FIG3/4CS18 |
| | | 3/4", DN20 | 22 mm | FIG3/4CS22 |
| 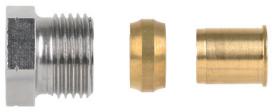 | **FIG1/ 2CSS** | **Compression fitting for COPPER and STEEL pipe**<br>Consisting of compression nut and compression ring and support insert.<br>For valves with internal thread.<br>Note: Support inserts have to be used for copper or soft steel pipe with 1.0 mm wall thickness. Max. operating temperature 120 °C, max. operating pressure 10 bar. | | |
| | | 1/2", DN15 | 12 mm | FIG1/2CSS12 |
| | | 1/2", DN15 | 14 mm | FIG1/2CSS14 |
| | | 1/2", DN15 | 15 mm | FIG1/2CSS15 |
| | | 1/2", DN15 | 16 mm | FIG1/2CSS16 |
| | | 1/2", DN15 | 18 mm | FIG1/2CSS18 |
| | | 3/4", DN20 | 18 mm | FIG3/4CSS18 |
| | **V5000Y** | **Kombi-3-plus RED (V5000) measuring and shut-off valve for the supply**<br>Note: For product information and diagrams see product data sheet 'V5000 Kombi-3-plus | | |
| | | | 1/2" (DN15) | V5000Y0015 |
| | | | 3/4" (DN20 | V5000Y0020 |
| | | | 1" (DN25) | V5000Y0025 |
| | | | 1 1/4" (DN32) | V5000Y0032 |
| | | | 1 1/2" (DN40) | V5000Y0040 |
| | | | 2" (DN50) | V5000Y0050 |
| | | | 2 1/2" (DN65) | V5000Y0065 |
| | | | 3" (DN80) | V5000Y0080 |

| | | | | |
|---|---|---|---|---|
| | **VB550Y** | **Ball valve (VB550) Shut-off valve for the supply** | | |
| | | | 1/2" (DN15) | VB550Y0015 |
| | | | 3/4" (DN20 | VB550Y0020 |
| | | | 1" (DN25) | VB550Y0025 |
| | | | 1 1/4" (DN32) | VB550Y0032 |
| | | | 1 1/2" (DN40) | VB550Y0040 |
| | | | 2" (DN50) | VB550Y0050 |
| | **VA2501** | **Tamper-proof cap** | | |
| | | for valves DN10 - DN25 | | VA2501A010 |
| | | for valves DN32 - DN50 | | VA2501A032 |
| | **VA2510** | **Insulation shells**<br>Note: For product information see product data sheet 'VA2510B Insulation Shells'. | | |
| | | for valves DN15 | | VA2510C015 |
| | | for valves DN20 | | VA2510C020 |
| | | for valves DN25 | | VA2510C025 |
| | | for valves DN32 | | VA2510C032 |
| | | for valves DN40 | | VA2510C040 |
| | | for valves DN50 | | VA2510C050 |
| | **VA3401A** | **Draining valve** | | |
| | | | for all sizes | VA3401A008 |
| | **VA8201FV** | **Presetting key** | | |
| | | for Kombi-II-plus V5032BLF valves DN15 | | VA8201FV02 |
| | **VA5032A** | **Draining adapter for SafeCon™ connections**<br>Can be used to drain the water from a SafeCon connection provided on the balancing valve families as shown below | | |
| | | | for all dimensions | VA5032A001 |

**Measuring equipment**

| | | | | |
|---|---|---|---|---|
| 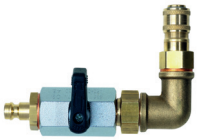 | **VA3600** | **Measuring adapter (2 pcs.)** | | |
| | | For measuring computer VM241 | | VA3600C001 |
| | **VM242A** | **BasicMes-2 handheld measuring computer**<br>Note: To connect the VM241 BasicMes to SafeCon™ pressue test cocks please order measuring adapter VA3600C001 separately. | | |
| | | Computer is supplied with case and accessories | for all sizes | VM242A0101 |

## Spare Parts

**Overview**

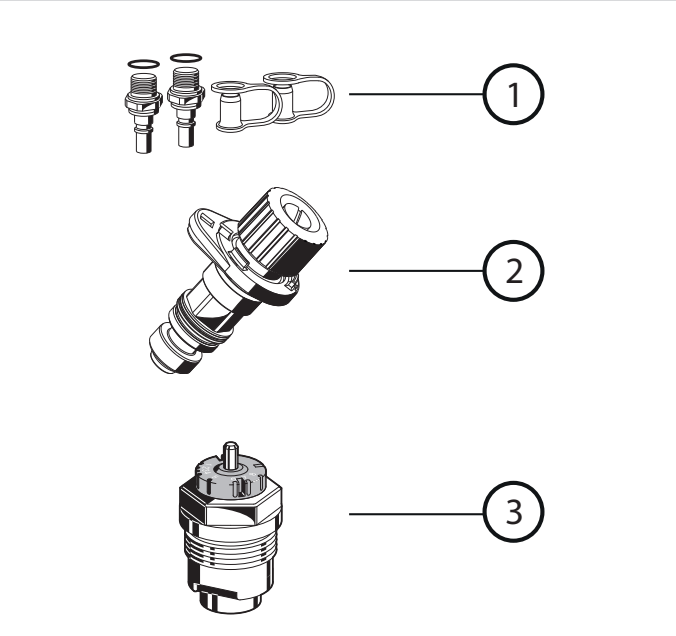


| | Description | Dimension | Part No. |
|---|---|---|---|
| **1** | **Spare set of 2 pressure test cocks G$^1/_4$"** | | |
| | | DN10 - DN80 | VS2600C001 |
| **2** | **Valve insert for Kombi-II-plus V5032B** | | |
| | | DN10 | VS5032DZ1010 |
| | | DN15 | VS5032DZ1015 |
| | | DN20 | VS5032DZ1020 |
| | | DN25 | VS5032DZ1025 |
| | | DN32 | VS5032DZ1032 |
| | | DN40 | VS5032DZ1040 |
| | | DN50 | VS5032DZ1050 |
| **3** | **Valve insert for Kombi II-plus V5032BLF** | | |
| | | DN15 | VS1200FV01 |

Промэлектроника
sales@prom-elec.com

resideo

Manufactured for
and on behalf of
Pittway Sàrl, Z.A., La Pièce 4,
1180 Rolle, Switzerland
by its authorised representative
Ademco 1 GmbH

For more information
**homecomfort.resideo.com/europe**
Ademco 1 GmbH, Hardhofweg 40,
74821 MOSBACH, GERMANY
Phone: +49 6261 810
Fax: +49 6261 81309

© 2020 Resideo Technologies, Inc. All rights reserved.

Subject to change. EN0H-2316GE25 R0420