Промэлектроника
sales@prom-elec.com

Honeywell
THE POWER OF CONNECTED

Heavy Duty Pressure Transducers

PX3 Series, 1 bar to 50 bar | 15 psi to 700 psi

32313757
Issue D

Datasheet

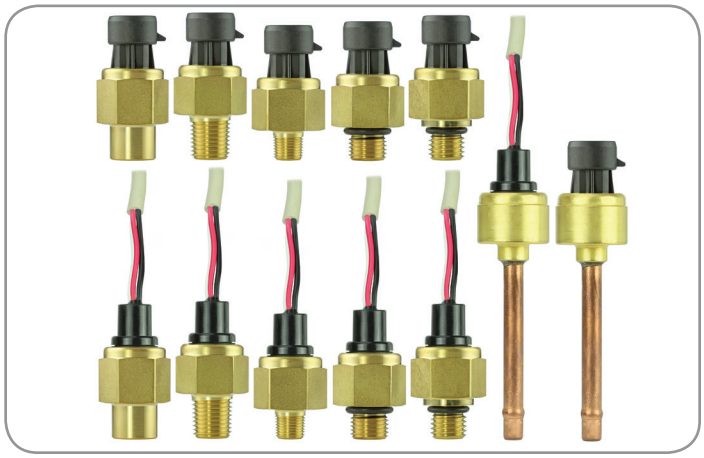

DESCRIPTION

Honeywell's PX3 Series Heavy Duty Pressure Transducers use piezoresistive sensing technology with ASIC (Application Specific Integrated Circuit) signal conditioning in a brass housing and Metri-Pack 150 or cable harness electrical connections. The PX3 Series are fully calibrated and temperature compensated from -40°C to 125°C [-40°F to 257°F].

VALUE TO CUSTOMERS

- Total Error Band (TEB) ±1.0 %FSS from -20°C to 85°C: Provides the most comprehensive, clear and meaningful indication of the sensor's true measurement performance over a specified temperature range; small error promotes system uptime and efficiency. (See Figure 1.)

Figure 1. TEB Definition and Temperature Performance

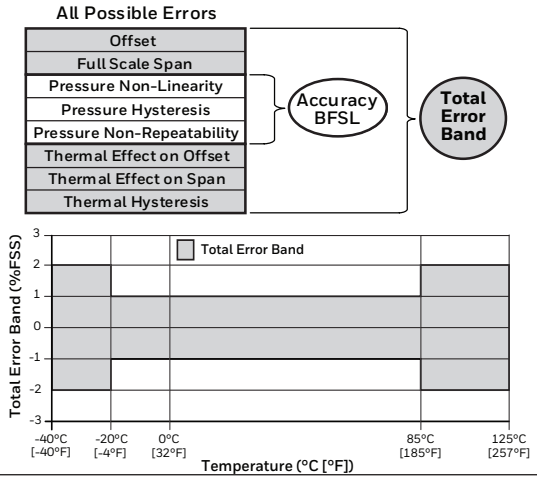

- High insulation resistance and dielectric strength: Protect the user and sensor in high over-voltage situations, and ensures that the device is compliant with industry standards.
- High EMC performance: Operates reliably in the presence of electro-magnetic fields, such as near wireless signals, RF communication, and electrical devices.
- High external freeze/thaw resistance: Survives exposure to frost, commonly found in refrigeration systems. (See Figure 2.)

(Shown with mating connector. See Figure 5.)

- Reduced current consumption: Helps to reduce energy costs, and enhances product life if used in battery driven systems.
- Media compatibility: Common HFC (hydrofluorocarbon) refrigerants such as R410A and R134A, next generation low global warming potential (GWP) refrigerants such as R448A (Solstice® N40), R32 and R1234ZE, engine oil, petroleum-based hydraulic fluids, DOT 3 brake fluid, and dry air. For ammonia and other corrosive media, see Honeywell's SPT Series.

DIFFERENTIATION

- Optional diagnostics mode: Beneficial in applications where the sensor functionality and the need to know internal or external failure modes is critical.
- Great customer value: Multiple configuration possibilities provide flexibility of use in the application with no upfront NRE or tooling charges.
- Durable: Provides the tough environmental specifications needed, including insulation resistance and dielectric strength, external freeze-thaw resistance (see Figure 2), and EMC performance.

FEATURES

- Pressure range: 1 bar to 50 bar | 15 psi to 700 psi (absolute and sealed gage)
- Ratiometric output: 0.5 Vdc to 4.5 Vdc or 0.33 Vdc to 2.97 Vdc
- Fully calibrated and temperature compensated
- Total Error Band: ±1.0 %FSS from -20°C to 85°C [-4°F to 185°F]
- External freeze/thaw resistance: 6 cycles from -30°C to 50°C [-22°F to 122°F]
- Insulation resistance: >100 MOhm, 1500 Vdc (in dry, non-ionized air)
- Dielectric strength: AC1500V, 1 min. or AC1800V, 1 s (in dry, non-ionized air)
- Current consumption: 3.5 mA max.
- EMC (radiated immunity): 200 V/m per ISO 11452-2
- Ingress protection IP67 (Metri-Pack 150), IP69K (cable harness)
- Response time: <2 ms
- RoHS, REACH, and CE compliant
- Six industry-standard pressure port types, including a tube port which provides for hermetically-sealed process connection

POTENTIAL APPLICATIONS

- Industrial: Refrigerant pressure monitoring in HVAC/R systems; air compressor system pressure
- Transportation: Air system monitoring; hydraulic oil pressure monitoring

The PX3 Series is not recommended for use with media involving water, saturated air such as steam and vapor, and ammonia.

PORTFOLIO

Honeywell's PX3 Series joins the PX2 Series, MLH Series, and SPT Series heavy duty pressure transducers.

ПРОМЭЛЕКТРОНИКА / sales@prom-elec.com

Table 1. Electrical Specifications

Characteristic	Parameter
Supply voltage: 5 Vdc 3.3 Vdc	 ±0.25 Vdc ±0.25 Vdc
Over voltage and reverse voltage	±16 Vdc
Current consumption: 5 Vdc supply 3.3 Vdc supply	 3.0 mA max. 1.6 mA to 2.1 mA
Short circuit protection	yes
Nominal output transfer function: 5 Vdc supply 3.3 Vdc supply	 0.5 Vdc to 4.5 Vdc (ratiometric to supply) 0.33 Vdc to 2.97 Vdc (ratiometric to supply)

Table 2. Performance Specifications (At 25°C [77°F] and under unless otherwise noted.)

Characteristic	Parameter
Operating temperature range[1]	-40°C to 125°C [-40°F to 257°F]
Storage temperature range[1]	-40°C to 125°C [-40°F to 257°F]
Compensated temperature range	-40°C to 125°C [-40°F to 257°F]
Total Error Band[2]: -20°C to 85°C [-4°F to 185°F] <-20°C, >85°C [<-4°F, >185°F]	 ±1.0 %FSS ±2.0 %FSS
Accuracy BFSL[3]	±0.25 %FSS
Response time	<2 ms (10% to 90% step change in pressure)
Turn on time[4]	<7 ms
EMC rating[5]: surge immunity (all leads) electrostatic discharge radiated immunity fast transient burst immunity to conducted disturbances radiated emissions radiated immunity	 ±1000 V line to ground per IEC 61000-4-5 ±4 kV contact, ±8 kV air per IEC 61000-4-2 10 V/m (80 MHz to 1000 MHz) per IEC 61000-4-3 ±1 kV per IEC 61000-4-4 3 V per IEC 61000-4-6 40 dB (30 MHz to 230 MHz), 47 dB (230 MHz to 1000 MHz) per CISPR 11 200 V/m per ISO 11452-2
Insulation resistance	>100 MOhm, 1500 Vdc (in dry, non-ionized air)
Dielectric strength	AC1500V, 1 min. or AC1800V, 1 s (in dry, non-ionized air)
Load resistance	>5 kOhm
Life	greater than 10 million full scale pressure cycles over the calibrated pressure range

[1] Dependent on external and internal seal and cable jacket materials. See Table 5 and Figure 5 for temperature range details.

[2] Total Error Band: The maximum deviation from the ideal transfer function over the entire compensated temperature and pressure range. Includes all errors due to offset, full scale span, pressure non-linearity, pressure hysteresis, pressure non-repeatability, thermal effect on offset, thermal effect on span, and thermal hysteresis. See Figure 1.

[3] Accuracy: The maximum deviation in output from a Best Fit Straight Line (BFSL) fitted to the output measured over the pressure range at 25°C [77°F]. Includes all errors due to pressure non-linearity, pressure hysteresis, and pressure non-repeatability. See Figure 1.

[4] Turn on Time: Duration from power applied until first valid output.

[5] Tested using 1.5 m [59.1 in] cable.

Table 3. Pressure Reference Definitions

Pressure Reference	Definition
Absolute	Output is calibrated to be proportional to the difference between applied pressure and a fixed reference to perfect vacuum (absolute zero pressure).
Sealed gage[1]	Sensor construction is identical to the absolute version with a built in reference at zero pressure in order to minimize measurement error over temperature. The output is calibrated to be proportional to the difference between applied pressure and a reference of 1 standard atmosphere (1.013 barA | 14.7 psiA). Example: 100 psi sealed gage has a calibrated pressure range from 14.7 psi absolute to 114.7 psi absolute. (See Figure 3.)

[1] Sealed gage option only available in pressure ranges at or above 8 bar | 100 psi.

Figure 3. Ratiometric Output Option AA for 100 psi, Absolute vs Sealed Gage

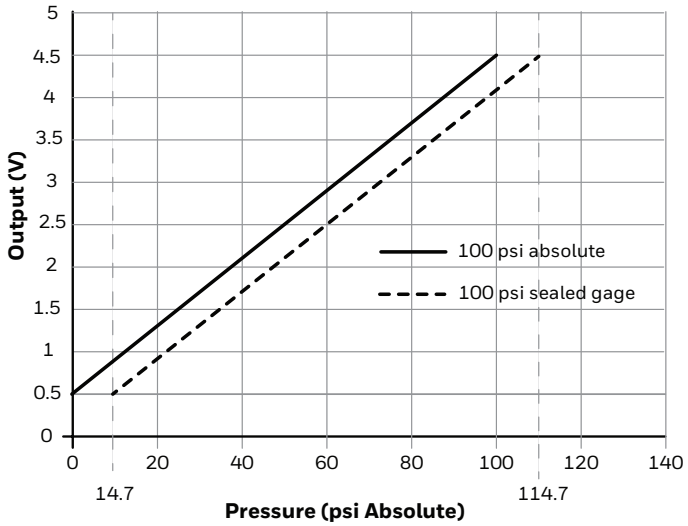

Table 4. Pressure Ratings

bar			psi		
Operating Pressure	Over-pressure	Burst Pressure	Operating Pressure	Over-pressure	Burst Pressure
1	5	8	15	70	115
1.6	5	8	30	150	250
2	10	17	50	250	400
2.5	10	17	100	450	750
4	17	27	150	450	750
6	31	51	200	450	1150
8	31	51	250	450	1150
10	31	51	300	1000	1500
16	32	80	500	1000	1500
20	69	103	600	1000	1500
25	69	103	667	1000	1500
35	69	103	700	1000	1500
40	69	103	-	-	-
46	69	103	-	-	-
50	69	103	-	-	-

Diagnostics Mode

The PX3 Series diagnostics mode allows the device to indicate when internal or external faults occur. If an internal fault occurs, the output will rail to the preset lower or upper limit values shown in Figure 4 and Table 5.

External faults will result in the sensor's output exceeding those preset limits (lower or upper). (For example, if the external sensor ground (signal) were lost, the sensor output would exceed the upper rail of 97.5%.)

Figure 4. Analog Output with Diagnostics

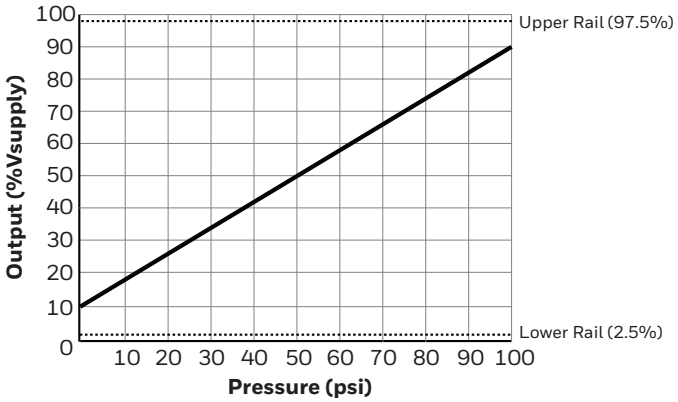

Table 5. Output Transfer Function Codes

Fault Condition	Analog Diagnostic Rail
EEPROM Corrupt	below lower rail
Sensor Bridge Open (any element)	above upper rail
Sensor Bridge Short (any element)	above upper rail
Low supply voltage	below lower rail
Loss of ground connection	above upper rail

Table 6. Environmental and Mechanical Specifications

Characteristic	Parameter
Shock: threaded ports tube port	 100 G per MIL-STD-202G, Method 213B, Cond. F (at 25°C [77°F]) 100 G per MIL-STD-202F, Method 213B, and Condition C
Vibration: threaded ports tube port	 20 G sweep, 10 Hz to 2000 Hz (at 25°C [77°F]) 10 Hz to 55 Hz, 2 mm displacement, tested as per IEC 60068-2-6; Test FC. (at 25°C [77°F])
Ingress protection: Metri-Pack 150 electrical connector cable harness electrical connector	 IP67 IP69K
Ambient humidity	0 %RH to 95 %RH, non-condensing
External freeze/thaw resistance	>6 cycles from -30°C to 50°C [-22°F to 122°F]
Wetted materials: threaded ports tube port braze filler internal O-ring media seal sensing element and substrate adhesives	 brass C36000; lead (Pb) content: 3.7% max. copper UNS C12200; lead (Pb) free silver and copper alloy seal material as required by the application (see seal material media compatibility options below) alumina, glass, silicon epoxy
Internal O-ring material media compatibility[1]: HNBR (option H) silicone (option S)	 refrigerants, engine oil, petroleum-based hydraulic fluid dry air
Other materials: Metri-Pack 150 electrical connector external O-ring seal on G1, M1 ports	 PBT 30% GF nitrile (-30°C to 125°C [-22°F to 257°F])

[1] Honeywell can assist with selecting suitable O-ring seal material for the media based on the seal manufacturer's recommendation. The customer should test the compatibility with the media to ensure that it is correct for the application.

CAUTION
PRODUCT DAMAGE TO TUBE PRESSURE PORT TYPE DURING BRAZING

Ensure that the temperature of the brass port and plastic connector is maintained below 125°C during flame brazing. Exposure to temperatures higher than 125°C can cause permanent product damage and can compromise ingress protection leading to short circuits.

Failure to comply with these instructions may result in product damage.

CAUTION
PRODUCT DAMAGE DUE TO MECHANICAL ISSUES

- Ensure torque specifications are determined for the specific application. Values provided are for reference only. (Mating materials and thread sealants can result in significantly different torque values from one application to the next.)
- When using mating parts made of stainless steel, use a thread sealant with anti-seize properties to prevent thread galling. Ensure the sealant is rated for the application.
- Use appropriate tools (such as an open ended wrench or deep well socket) to install transducers.
- Always hand-start transducers into the hole to prevent cross threading and damage.
- Ensure that torque is not applied to the electrical connector.
- Ensure that the proper mating electrical connector with a seal is used to connect the transducer. Improper or damaged seals can compromise ingress protection, leading to short circuits.

Failure to comply with these instructions may result in product damage.

CAUTION
PRODUCT DAMAGE DUE TO PARTICULATES

- Ensure that a filter is used upstream of the transducer to keep media flow free of larger particulates and increased humidity. All PX3 Series transducers are dead-ended devices; particulate accumulation and condensing moisture may affect sensor output.
- It is recommend that the transducer be positioned with the port facing downwards; any particulates in the system are less likely to enter and settle within the pressure transducer if it is in this position.
- Ensure that the media does not create a residue when dried. Build-up inside the transducer may affect transducer output; rinsing of a dead-ended transducer is potentially difficult and has limited effectiveness in removing residue.

Failure to comply with these instructions may result in product damage.

Heavy Duty Pressure Transducers

PX3 Series, 1 bar to 50 bar | 15 psi to 700 psi

Figure 5. Nomenclature and Order Guide

For example, **PX3AN1BS150PAAAX** defines a PX3 Series Heavy Duty Pressure Transducer, Metri-Pack 150, standard (UL V-0) electrical connector type, 1/4-18 NPT pressure port type, brass housing body, silicone: -40°C to 125°C [-40°F to 257°F] seal material and temperature range, 150 psi pressure range, absolute pressure reference, ratiometric: 0.5 Vdc to 4.5 Vdc output transfer function, no special

PX3 A N1 B S 150P A AA X

Series

PX3	Heavy Duty Pressure Transducer[1]

Electrical Connector Type[2]

A	Metri-Pack 150, Standard (UL V-0)[3]
E	PVC Cable with three 22 AWG wires: 1 m [3.2 ft][4] -40°C to 100°C [-40°F to 212°F]
F	PVC Cable with three 22 AWG wires: 2 m [6.6 ft][4] -40°C to 100°C [-40°F to 212°F]
M	XLPE Cable with three 22 AWG wires: 1 m [3.2 ft][4] -40°C to 125°C [-40°F to 257°F]
N	XLPE Cable with three 22 AWG wires: 2 m [6.6 ft][4] -40°C to 125°C [-40°F to 257°F]

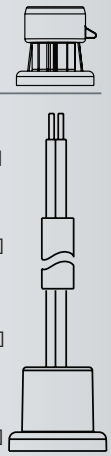

Pressure Port Type[5]

F1	7/16-20 UNF 1/4 inch 45° Flare Female Schrader (SAE J512)
G1	G1/4 A-G (ISO 1179-3)
M1	M12 x 1.5 (ISO 6149-3)
N1	1/4-18 NPT
N2	1/8-27 NPT
T1	Tube

Housing Body Material

B	Brass (C36000)

Special

X	

Output Transfer Function

AA	Ratiometric, 5.0 V: 10% to 90% Vs
DA	Ratiometric, 5.0 V: 10% to 90% Vs (diagnostics on)[6]
AC	Ratiometric, 3.3 V: 10% to 90% Vs
DC	Ratiometric, 3.3 V: 10% to 90% Vs (diagnostics on)[6]

Pressure Reference

A	Absolute
S	Sealed gage[7]

Pressure Range[3]

bar		psi	
001B	1 bar	**015P**	15 psi
1.6B	1.6 bar	**030P**	30 psi
002B	2 bar	**050P**	50 psi
2.5B	2.5 bar	**100P**	100 psi
004B	4 bar	**150P**	150 psi
006B	6 bar	**200P**	200 psi
008B	8 bar	**250P**	250 psi
010B	10 bar	**300P**	300 psi
016B	16 bar	**500P**	500 psi
020B	20 bar	**600P**	600 psi
025B	25 bar	**667P**	667 psi
035B	35 bar	**700P**	700 psi
040B	40 bar		
046B	46 bar		
050B	50 bar		

Internal O-ring Material and Temperature Range[2,8]

H	HNBR (Hydrogenated Nitrile Butadiene Rubber): -30°C to 125°C [-22°F to 257°F] (50 hr at 135°C [257°F])
S	Silicone: -40°C to 125°C [-40°F to 257°F]

Mating Connector[3]

[1] Not all catalog listing combinations are shown. Custom products are available. Please contact Honeywell.

[2] Custom configurations such as varied cable lengths, end mating connectors, different O-ring materials, and different pressure ranges are available.

[3] Metri-Pack 150 mating connectors with shielded cable and three 22 AWG wires are available from Honeywell. Order part no. 3685301 for 1 m [3.2 ft] cable length and part no. 3685302 for 3 m [9.8 ft] cable length.

[4] PVC Flame Retardant (FR) type cable is FT1 rated per IEC60332-1; XLPE non-flame retardant cable is FT2 rated per IEC60332-1.

[5] See Table 6 for pressure port materials.

[6] See page 3 for Diagnostics Mode information.

[7] Sealed gage option only available in pressure ranges at or above 8 bar | 100 psi.

[8] See Table 6 for O-ring seal material media compatibility.

Heavy Duty Pressure Transducers

PX3 Series, 1 bar to 50 bar | 15 psi to 700 psi

Figure 6. Metri-Pack Mounting Dimensions (For reference only. mm/[in].)

Pinout

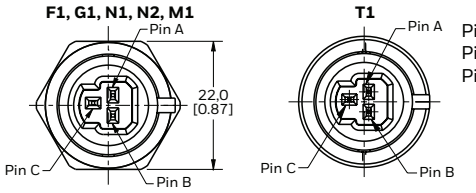

Pin A = Ground
Pin B = Vsupply
Pin C = Vout

General product marking

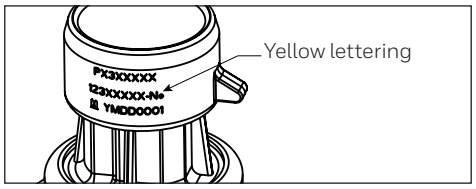

F1: 7/16-20 UNF 1/4 inch 45° Flare Female Schrader (SAE J512)

Seal: 45° cone
Mating geometry: SAE J512
Installation torque: 17 N m [12.5 ft-lb]
Weight: 54,5 g [1.9 oz]

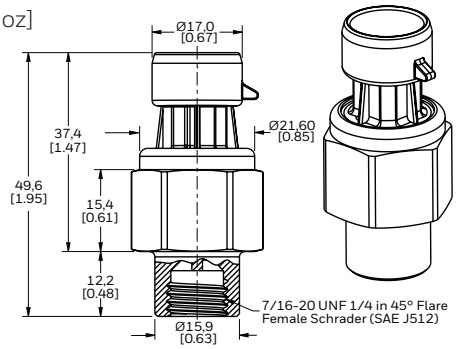

G1: G1/4 A-G (ISO 1179-3)

Seal: nitrile O-ring (included)
Mating geometry: ISO 1179-1
Installation torque: 50 N m [36.9 ft-lb]
Weight: 35,1 g [1.2 oz]

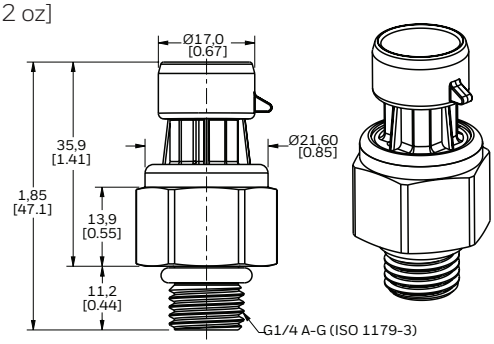

M1: M12 x 1.5 (ISO 6149-3)

Seal: Nitrile O-ring (included)
Mating geometry: ISO 6149-1
Installation torque: 25 N m [18.4 ft-lb]
Weight: 33,9 g [1.2 oz]

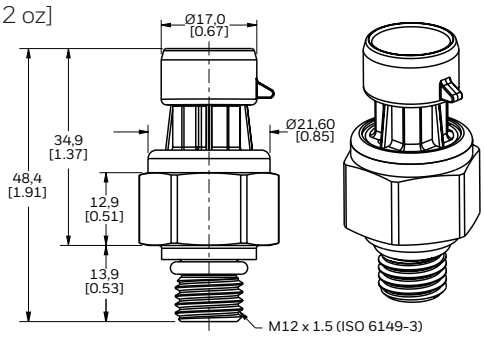

N1: 1/4-18 NPT

Seal: Pipe thread
Mating geometry: ANSI B1.20.1
Installation torque: Two to three turns from finger tight
Weight: 35,1 g [1.2 oz]

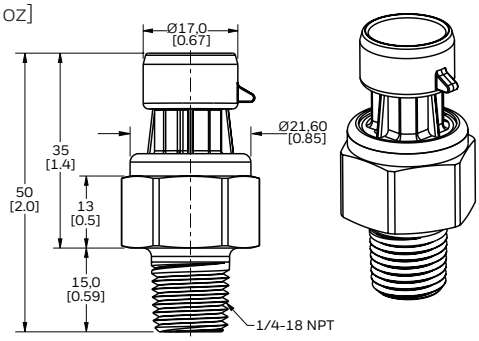

N2: 1/8-27 NPT

Seal: Pipe thread
Mating geometry: ANSI B1.20.1
Installation torque: Two to three turns from finger tight
Weight: 31,2 g [1.1 oz]

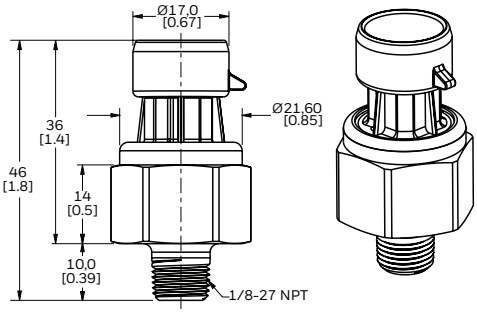

T1: Tube

Seal: Brazing
Weight: 32 g [1.1 oz]

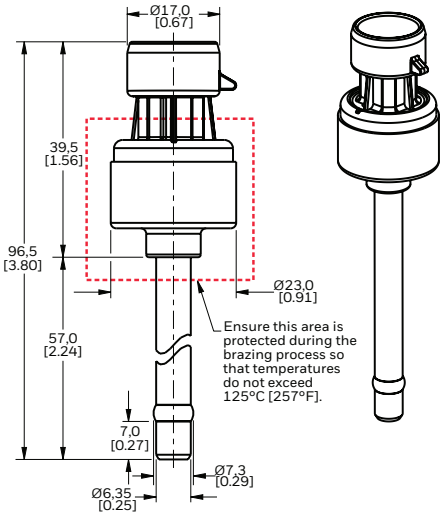

Heavy Duty Pressure Transducers

PX3 Series, 1 bar to 50 bar | 15 psi to 700 psi

Figure 7. Cable Harness Mounting Dimensions Shown by Pressure Port Type (For reference only. mm/[in].)

Wire colors

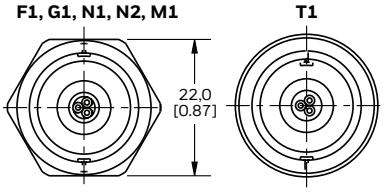

Black = Ground
Red = Vsupply
White = Vout

General product marking

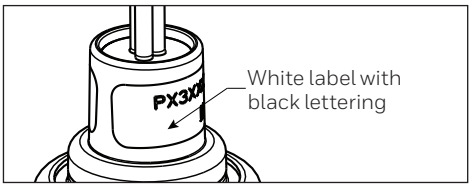

F1: 7/16-20 UNF 1/4 inch 45° Flare Female Schrader (SAE J512)

Seal: 45° cone
Mating geometry: SAE J512
Installation torque:
17 N m [12.5 ft-lb]
Weight: 90 g [3.2 oz]

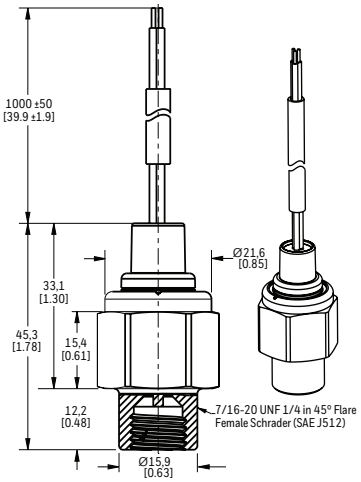

G1: G1/4 A-G (ISO 1179-3)

Seal: nitrile O-ring (included)
Mating geometry: ISO 1179-1
Installation torque:
50 N m [36.9 ft-lb]
Weight: 70 g [2.5 oz]

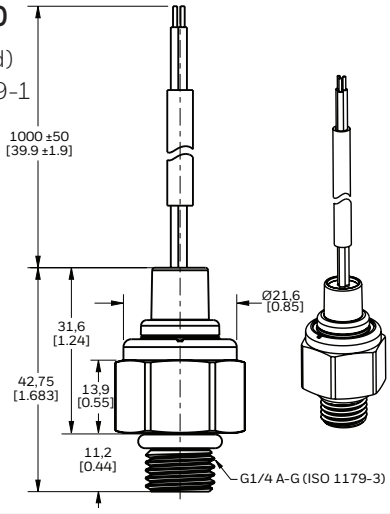

M1: M12 x 1.5 (ISO 6149-3)

Seal: nitrile O-ring (included)
Mating geometry:
ISO 6149-1
Installation torque:
25 N m [18.4 ft-lb]
Weight: 69 g [2.4 oz]]

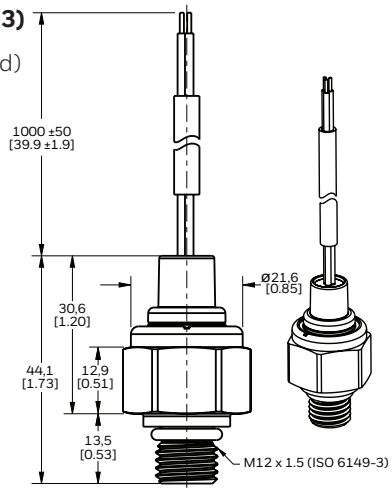

N1: 1/4-18 NPT

Seal: Pipe thread
Mating geometry:
ANSI B1.20.1
Installation torque:
Two to three turns from finger tight
Weight: 70 g [2.5 oz]

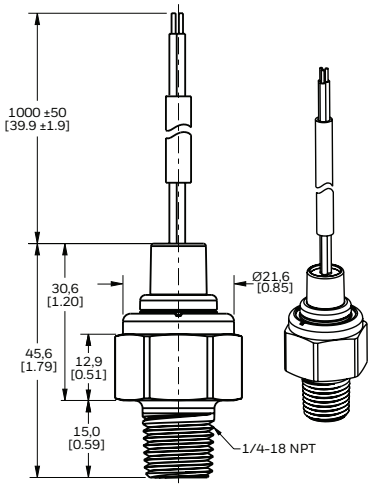

N2: 1/8-27 NPT

Seal: Pipe thread
Mating geometry:
ANSI B1.20.1
Installation torque:
Two to three turns from finger tight
Weight: 66 g [2.3 oz]

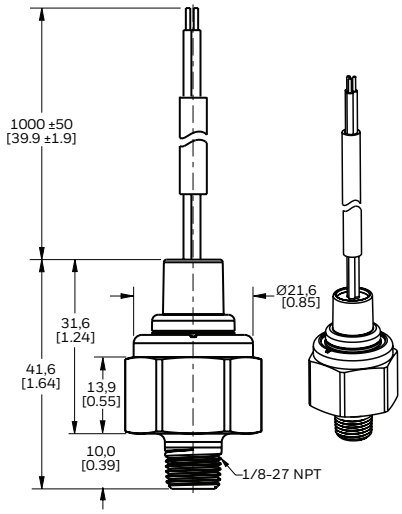

T1: Tube
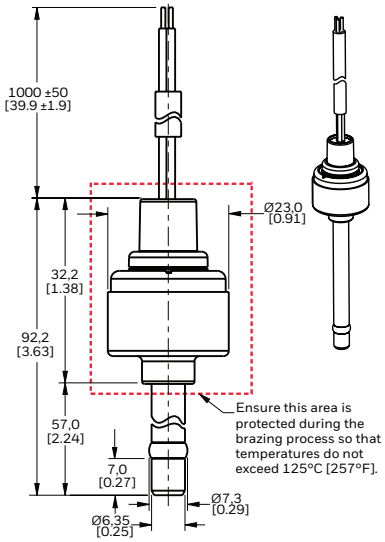
Seal: Brazing
Weight: 67 g [2.4 oz]