FEMA
by Honeywell

PRESSURE · TEMPERATURE · FLOW CONTROL

Product Catalogue 2019

ПРОМЭЛЕКТРОНИКА, sales@prom-elec.com

FEMA-Product range

	Pressure			Temperature			Flow monitors
	electronic		mechanic	electronic		mechanic	
	switch	transmitter	switch	switch	transmitter	switch	
Ventilation and air-conditioning systems		DPTE	DPS	FTSE	FTSE	TRM	S6040
		DPTA	HCD			T6120	KSL
		DPTAQ				H6120/ H6045	SWL
						FT69	
Liquids and gases	Smart DCM	Smart SN	DCM/DNM	Smart Temp	Smart Temp	TX/TXB	KSW
	Smart DCM DIFF	Smart SN DIFF	DNS/VNS			TAM	SWW
			DDCM				S6065 (liquides)
	Smart Press	Smart Press	VCM/VNM				
		PTI/PTU					
		DTI/DTU					
Tested to EU Directive 2014/68/EU			DWAM/ SDBAM			STW/STB	
						STB/STW	
			DBS			TWP	
			FD				
			DGM				
			DWR				
			DWR-B				
Tested to ATEX 2014/34/EU			EX-DCM/ EX-DNM			EX-TX	
						EX-TAM	
			EX-DNS/ EX-VNS			EX-TRM	
			EX-DDCM				
			EX-VCM/ EX-VNM				
			EX-DWR				
			EX-DGM				
Accessories	ST	ST	ZF	ST	ST	ZFT	PA
	VKD	VKD	VKD		G12	ST, H, P, R	
	tube, circuit points	tube, circuit points	ZFV		N12	WLP	
			MAU			immersion wells ZT	
	MAU	MAU	tube, circuit points				

FUNCTIONAL SAFETY FOR YOUR PLANTS

Today, **Functional safety** is an indispensable component of the development of equipment for the fields of chemical process engineering and machine construction. With the determination of safety relevant parameters in accordance with IEC61508-2, FEMA is well poised to meet these more stingent technical safety requirements. We would be happy to provide you with the correspoonding data for pressure switches, thermostats, and our PTS and PTH 2-wire pressure transmitters.

The Prevention of explosions is a primary demand in the developmentof equipment in the fields of chemical process engineering, machine construction, as well as the processing and distribution of oil and gas. When you least expect it, a spark can trigger a catastrophe. The goal of FEMA is to prevent that spark. In keeping with this goal, its pressure switches and thermostats are certified according to European Directive **2014/34/EU**. FEMA offers a wide range of ignition protection devices confirming to Ex-d (flameproof enclosure), Ex-e (increased safety), Ex-t (dust ignition protection by enclosure), as well as to Ex-i (intrinsic protection), and is thus well poised to meet coming challenges in these markets. As the reqiest of numerous of our costumers, we have now decided to also certify our Ex products according **IECEx**, as well.

All SIL2-certified FEMA pressure switches, thermostats, and 2-wire transmitters at a glance:

Pressure switches -1 to 63 bar
· DCM, DNM, DNS, VCM, VNM, VNS

Differential pressure switches 4 mbar to 16 bar
· DDCM

Pressure monitors and limiters 15 mbar to 40 bar
· DWR, DWAM, DWAMV, SDBAM, FD, DGM

Thermostats -20 to 130 °C
· TAM, TRM, TX

All ex-pressure switches & thermostats
· Ex-DCM, Ex-DDCM, Ex-DGM, Ex-DNM, Ex-DNS, Ex-DWR, Ex-VCM, Ex-VNM, Ex-VNS, Ex-TAM, Ex-TRM, Ex-TX

2-wire pressure transmitters -1 bis 40 bar
· PTS…, PTH…-A2

The commonly used term Functional Safety has become a central concept for controlling unexpected disturbances in the areas of vehicle construction, power plant construction, the chemicals industry, and machine construction.

New standards have been introduced for plant construction. And for the construction of field devices. IEC 61508-2 (on the functional safety of safety relevant electrical/electronic/ programmable electronic systems) was also developed. It pertains to the manufacture of suitable safety-relevant components for the chemical engineering sector.

The introduction of the Machinery Directive RL/2006/42/EC homonizes DIN EN ISO 13849-1 (Safety of Machinery – Safety Ralated Parts of a Control System – Part 1: Gerneral principles for design) and also calls for „Functional Safety“.

FEMA by Honeywell, in cooperation with our service partner EXIDA, had the standards-compliant development of our PTS- and PTH..-A2 2-wire pressure transmitters verified. Further, in the context of an FMEDA in late 2011, we determined the parameters necessary for the calculation of Functional safety for all our mechanical pressure switches and thermostats.

Type	HFT	DC	PFD (Tproof = 1 year)	PFD (Tproof = 2 years)	PFD (Tproof = 5 years)	MTTFd (years)	SIL-Level	Performance Level (calc.)/ PFH
Pressure Switch								
DCM/DNM/DNS (min)	0	0 %	4,91E-04	7,24E-04	1,42E-03	1934	SIL2	5,90E-08 1/h
DCM/DNM/DNS (max)	0	0 %	6,65E-04	9,81E-04	1,93E-03	1426	SIL2	8,01E-08 1/h
DDCM252-6002 (min/max)	0	0 %	7,34E-04	1,08E-03	2,13E-03	1282	SIL2	8,90E-08 1/h
DDCM014-16 (min/max)	0	0 %	6,53E-04	9,62E-04	1,89E-03	1445	SIL2	7,90E-08 1/h
VCM/VNM/VNS (min)	0	0 %	4,91E-04	7,24E-04	1,42E-03	1934	SIL2	5,90E-08 1/h
VCM/VNM/VNS (max)	0	0 %	6,65E-04	9,81E-04	1,93E-03	1426	SIL2	8,01E-08 1/h
DWR/DGM (min)	0	0 %	4,91E-04	7,24E-04	1,42E-03	1934	SIL2	5,90E-08 1/h
DWR/DGM (max)	0	0 %	6,40E-04	9,44E-04	1,85E-03	1482	SIL2	7,70E-08 1/h
DWAM/SDBAM	0	0 %	5,70E-04	8,39E-04	1,65E-03	1654	SIL2	6,90E-08 1/h
DBS-DWAM, FD	0	0 %	2,90E-04	4,29E-04	8,42E-04	3261	SIL2	3,50E-08 1/h
DBS-DWR (max)	0	0 %	3,62E-04	5,33E-04	1,05E-03	2594	SIL2	4,40E-08 1/h
DBS-DWR (min)	0	0 %	2,12E-04	3,13E-04	6,14E-04	4390	SIL2	2,60E-08 1/h
EX-Pressure Switch								
EX-DNM/-DNS (min)	0	0 %	4,91E-04	7,24E-04	1,42E-03	1934	SIL2	5,90E-08 1/h
EX-DNM/-DNS (max)	0	0 %	6,65E-04	9,81E-04	1,93E-03	1426	SIL2	8,01E-08 1/h
EX-DDCM252-6002 (min/max)	0	0 %	7,34E-04	1,08E-03	2,13E-03	1282	SIL2	8,90E-08 1/h
EX-DDCM014-16 (min/max)	0	0 %	6,53E-04	9,62E-04	1,89E-03	1445	SIL2	7,90E-08 1/h
EX-VNM/-VNS (min)	0	0 %	4,91E-04	7,24E-04	1,42E-03	1934	SIL2	5,90E-08 1/h
EX-VNM/-VNS (max)	0	0 %	6,65E-04	9,81E-04	1,93E-03	1426	SIL2	8,01E-08 1/h
EX-DWR/-DGM (min)	0	0 %	4,91E-04	7,24E-04	1,42E-03	1934	SIL2	5,90E-08 1/h
EX-DWR/-DGM (max)	0	0 %	6,40E-04	9,44E-04	1,85E-03	1482	SIL2	7,70E-08 1/h
Thermostats								
TAM/TRM/TX/TXB (min)	0	0 %	4,91E-04	7,24E-04	1,42E-03	1934	SIL2	5,90E-08 1/h
TAM/TRM/TX/TXB (max)	0	0 %	6,99E-04	1,03E-03	2,02E-03	1358	SIL2	8,41E-08 1/h
EX-Thermostats								
EX-TAM/TRM/TX/TXB (min)	0	0 %	4,91E-04	7,24E-04	1,42E-03	1934	SIL2	5,90E-08 1/h
EX-TAM/TRM/TX/TXB (max)	0	0 %	6,99E-04	1,03E-03	2,02E-03	1358	SIL2	8,41E-08 1/h

HFT: Minimum hardware fault tolerance; **DC:** Diagnosis Converage; **PFD:** Probability of Failure on Demand; **SIL:** Safety Integrity Level; **MTTFd:** Meantime to Failure dangerous; **PFH:** Probability of Failure per Hour

Explosion Protection is one of the most important aspects for personal and environmental safety, in the context of continually changing process engineering and manufacturing technologies.

Numerous changes in standards – e.g., the new regulations pertaining to dust explosion protection – necessitate increased vigilance in rechecking design type approvals.

FEMA by Honeywell has taken this fact fully into account in re-approving its tested and proven EX-pressure switches and thermostats according to EN60079.

In doing so, customer demands were taken fully into account and both the expansion of Ex-zones and the inclusion of devices according to Ex-i („intrinsically safe“) included in the certificate.

Dust explosion protection has been achieved with Ex-t („protection by means of housing“).

NEW: IECEx
To take account of the constantly increasing requirements on the international explosion protection, Honeywell FEMA has decided to approve the pressure switches and thermostats in accordance with IECEx. The corresponding certificate can be downloaded from the IECEx Homepage. A copy is also available upon request.

All FEMA Ex-pressure switches and thermostats with new certification at a glance:

Ex-Pressure switches for liquid and gaseous media from -1 to 63 bar:
Ex-DCM, Ex-DDCM, Ex-DNM, Ex-DNS, Ex-DWR, DCM-, DDCM-, DNM-, DNS-, DWRxxx-513, -563, -574, -575, -576, -577

Ex-Pressure switches for flammable gases from 15...250mbar:
Ex-DGM, DGMxxx-513, -563, -574, -575, -576, -577

Ex-Thermostats from -20 to 130 °C:
Ex-TAM, Ex-TRM, Ex-TX
TAM, TRM, TXxxx-513, -563

NEW ASPECTS OF CERTIFICATION:

- **Alteration of the named certification body to „IBExU„**
- **Certification for dust explosion protection (Ex-t) as per EN60079-31**
- **Expansion of the temperature range from -15 to -20 °C**
- **Zone 20 in the sensor for use in permanently dusty atmospheres**
- **Inclusion of Ex-i („intrinsically safe“) as per EN60079-11**

PRESSURE

Mechanical pressure switches

Product overview	**14**
Technical features/Advantages	15
Definitions	16 – 17
General description	18
Principal technical data	19 – 20
Dimensioned drawing	21 – 22
Setting instructions	23 – 24
Type codes	25
Additional functions/Connection schemes	26 – 29
Pressure switches with 2 microswitches — technical data	30 – 33
Product overview pressure switches for liquids and gases	**34**
10 selection criteria	35
DCM/DNM series for general applications	36
DNS/VNS series pressure and vacuum switches with stainless steel sensors (1.4571)	37 – 38
DDCM series differential pressure switches	39
VCM/VNM series vacuum switches	40
Product overview pressure switches tested to PE Directive 2014/68/EU	**41 – 42**
Definitions and information	43 – 48
DWAM/DWAMV/SDBAM series in steam and hot water systems	49
DBS series safety-engineered pressure monitors and pressure limiters	50 – 52
FD series maximum pressure limiters for liquid gas installations	53
DGM series pressure monitors for fuel gases	54
DWR/DWR-B series pressure monitors/pressure limiters for fuel gases and liquid fuels	55 – 56

Pressure monitoring in areas with risk of explosion

General inforrnation about explosion protection	57 – 60
Product overview mechanical EX-pressure switches	61
EX-DCM, EX-DNM	62
EX-VNS, EX-DNS	63
EX-DDCM	64
EX-VCM, EX-VNM	65
EX-DWR	66
EX-DGM	67
For ventilation and air-conditioning Systems	
HCD, DPS	68 – 69

Electronic pressure switches

Product overview electronic pressure switches and pressure transmitter	70
Smart DCM	72 – 73
Smart DCM DIFF	74 – 75
Smart Press PST-R	76 – 81
Specification pressure switches	82

Pressure transmitters

Product overview	84 – 85
For liquids and gases	
Smart SN	86 – 87
Smart SN DIFF	88 – 89
Pressure transmitter PTI, PTU	90 – 91
Differential pressure transmitter DTI, DTU	92 – 93
For ventilation and air-conditioning	
DPTE, DPTA, DPTAQ	94 – 95
Specification pressure transmitters	96

TEMPERATURE

Mechanical thermostats

Product overview	98
Mechanical thermostats: principal technical data	99 – 101
Additional functions and service functions for thermostats	102
For ventilation and air-conditioning Product overview	103 – 104
TRM and T6120A/B series industrial room thermostats	105 – 107
H series room and duct hygrostats	108
FT69 series frost protection thermostats	109
FTSE series Electronic frost protection thermostat	110 – 111
For liquids and gases/Product overview	**112 – 113**
TAM series capillary tube thermostats	114
TX series rod thermostats	115
STW/STB series strap-on thermostats	116
STB series temperature monitors, temperature limiters, type-tested	117
STB/STW series temperature monitors, temperature limiters, type-tested	118
Thermostats in Ex-version	**119**
Ex-TX	120
Ex-TAM	121
Ex-TRM	122

Electronic thermostats

TST/TST-R series Smart Temp electronic thermostats/temperature transmitters	124 – 128

Temperature sensors

General notes	130
Temperature sensors Pt 100 in stainless steel	**131**
Specification mechanical thermostats	132

FLOW CONTROL

Flow monitors

Product overview	134 – 135
S6040, KSL, SWL series, air flow monitors	136 – 138
S6065, KSW, SWW series, flow monitors for liquids and gases	139 – 142

ACCESSORIES

VKD series, valve blocks for pressure switches and pressure transmitters	144
Siphons, adapters, pressure surge reducers and threaded joints	145
ZFV series, pressure mediators and separating diaphragms	146
Accessories for thermostats, pressure monitors and transmitters	147
Immersion Wells for thermostats and temperature transmitters	148

Replacement products	149 – 153
General Terms and Conditions	154 – 156

Type	Page
ASW…	142
ASL…	138
AZ3.1B1	29
DCM	36
DDCM	39
DGM	54
DMW	145
DNM	36
DNS	37, 38
DPS	69
DPTA	95
DPTAQ	95
DPTE	94
DTI/DTU	92
DWAM	49, 51
DWR	51, 52, 55, 56
Ex-DCM	62
Ex-DDCM	64
Ex-DGM	67
Ex-DNM	62
Ex-DNS	63
Ex-DWR	66
Ex-TAM	121
Ex-TRM	122
Ex-TX	120
Ex-VCM	65
Ex-VNM	65
Ex-VNS	63
FD	53
FT	109
FTSE	110
G12…	148

Type	Page
H60…/H61…	108
H1	147
HCD	68
K430/480	145
KSL	137
KSW	141
MAU8	145
NPT1	145
PA	136, 139
P	131
P2	147
P2-TVS	125
PS	73
PSH	73, 75
PST	77
PTI/PTU	90
PTH	89
PTS	87, 89
R1/Ms	148
R1/Nst	148
R10/Ms	148
R10/Nst	148
R2/Ms	148
R2/Nst	148
R20/Ms	148
R20/Nst	148
R3/Ms	148
R4	147
R5	147
R6	148
R7	148
RN10…	148
RN20…	148

Type	Page
S60	136, 139
SDBAM	49
SLF…	138
ST12	78, 125
ST218	147
ST5	147
STA12	125
STB…	116, 117
STW…	116, 117
STW/TR	118
STB/TW	118
STB/TR	118
SWF…	142
T61…	106
T…NSTF	118
TAM…	114
TRM…	105
TST…	124
TWP	117
TX…	115
U…	145
VCM…	40
VKD…	144
VNM	40
VNS	37, 38
WLP	147
WZ2.2	29
ZF…	26 – 29
ZFT…	102
ZFV	146

MECHANICAL PRESSURE SWITCHES

FEMA
by Honeywell

Typ	Medium*	Pressure ranges	European Directive	Testing basis	Comments	Page
HCD	Air and fuel gases	0,2 mbar to 150 mbar	EU/2016/426	DIN EN1854	Differential pressure monitor	68
DPS	Air and non-aggressive gases	20Pa bis 2500 Pa	EU/2016/426	DIN EN1854	Differential pressure monitor	69
DCM **DNM**	Non-aggressive liquids and gases	1 mbar to 63 bar	RL 2014/35/EU	DIN EN60730	Mechanical pressure switches	36
Ex-DCM **Ex-DNM**	Non-aggressive liquids and gases	1 mbar to 63 bar	ATEX 2014/34/EU IECEx	DIN EN60730, DIN EN60079	Mechanical Ex-Pressure switches	62
DNS **VNS**	Aggressive liquids and gases	-1...16 bar	RL 2014/35/EU	DIN EN60730	Vacuum switches with 1.4571 stainless steel sensors	37–38
Ex-DNS **Ex-VNS**	Aggressive liquids and gases	-1...16 bar	ATEX 2014/34/EU IECEx	DIN EN60730, DIN EN60079...	Ex-Pressure-/ Ex-Vacuum switches with 1.4571 stainless steel sensors	63
DDCM	Liquids and gases	4 mbar to 16 bar	RL 2014/35/EU	DIN EN60730	Differential pressure monitor	39
Ex-DDCM	Liquids and gases	4 mbar to 16 bar	ATEX 2014/34/EU IECEx	DIN EN60730, DIN EN60079	Ex-Differential pressure monitor	64
VCM **VNM**	Liquids and gases	-1...0,5 bar	RL 2014/35/EU	DIN EN60730	Vacuum switches	40
Ex-VCM **Ex-VNM**	Liquids and gases	-1...0,5 bar	ATEX 2014/34/EU IECEx	DIN EN60730, DIN EN60079	Ex-Vacuum switches	65
DWAM **DWAMV** **SDBAM**	Steam and hot water	0,1...32 bar	RL 2014/68/EU	VdTÜV Memo Pressure 100, DIN EN12952-11, DIN EN12953-9	Pressure monitors and pressure limiters	49
DBS	Liquids and gases	0,1 bar to 40 bar	RL 2014/68/EU ATEX 2014/34/EU IECEx	VdTÜV Memo Pressure 100, DIN EN 1854, EN 13611 DIN EN12952-11, DIN EN12953-9	Self-monitoring pressure sensors to be combined with isolating amplifiers	50-52
FD	Liquid gases	3 – 16 bar	RL 2014/68/EU ATEX 2014/34/EU IECEx	VdTÜV Memo Pressure 100, DIN EN 764-7	Self-monitoring pressure sensors to be combined with isolating amplifiers	53
DGM	Fuel gases	15 mbar to 1,6 bar	EU/2016/426	DIN EN1854, DIN EN13611	Pressure monitors Suitable for fuel gases	54
Ex-DGM	Fuel gases	15 mbar to 250 mbar	EU/2016/426 ATEX 2014/34/EU IECEx	DIN EN1854, DIN EN13611, DIN EN60079	Ex-Pressure monitors especially suitable for fuel gases	67
DWR	Steam, hot water, fuel gases and liquid fuels	0,1 bar to 40 bar	RL 2014/68/EU EU/2016/426	VdTÜV Memo Pressure 100, DIN EN1854, DIN EN12952-11, DIN EN12953-9	Pressure switches "of special construction" tested with 2 million cycles.	55–56
Ex-DWR	Steam, hot water, fuel gases and liquid fuels	0,1 bar to 40 bar	RL 2014/68/EU EU/2016/426 ATEX 2014/34/EU IECEx	VdTÜV Memo Pressure 100, DIN EN1854, DIN EN12952-11, DIN EN12953-9, DIN EN60079	Ex-Pressure switches "of special construction" tested with 2 million cycles	66

* Materials in contact with medium are listed in the datasheets. The test on media resistance is gererally up to the planner or technical decision maker.

Mechanical pressure switches

Technical features / Advantages

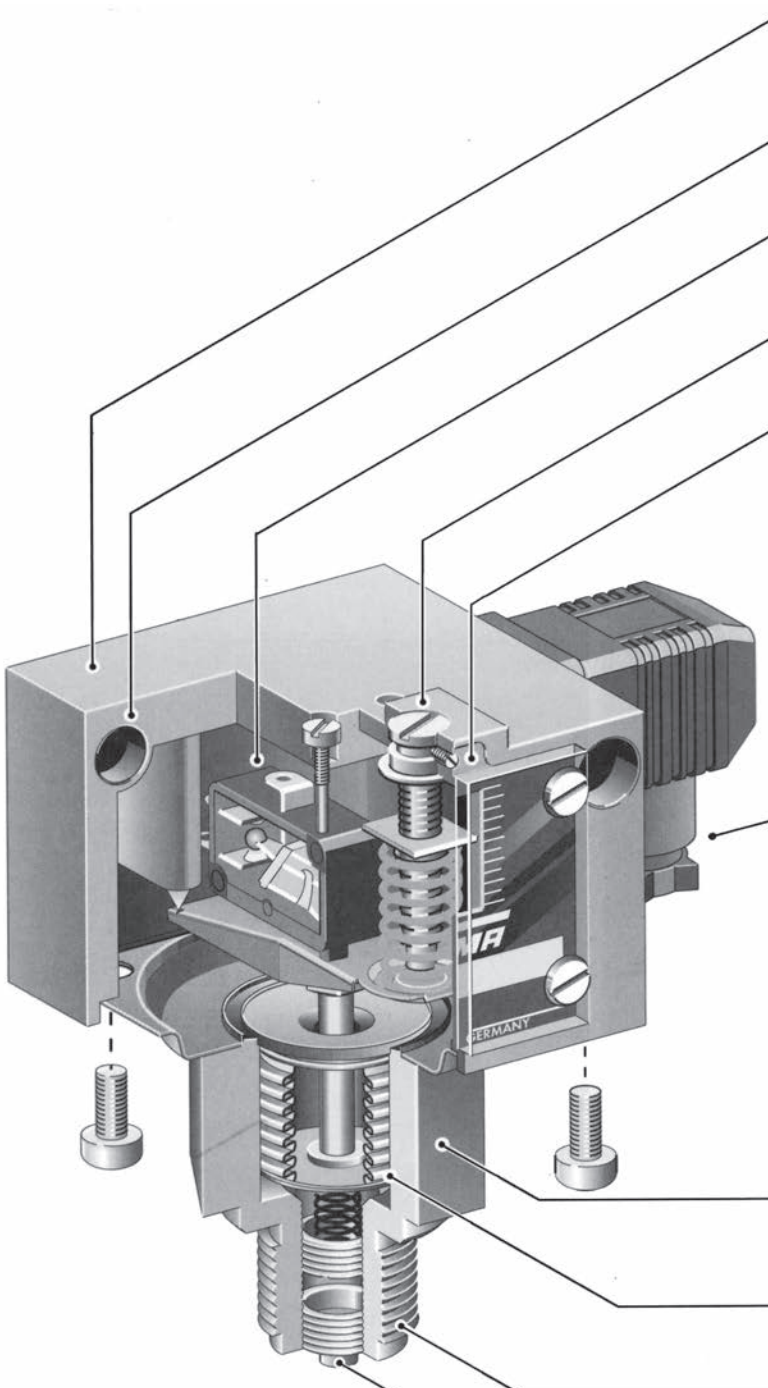

Definitions

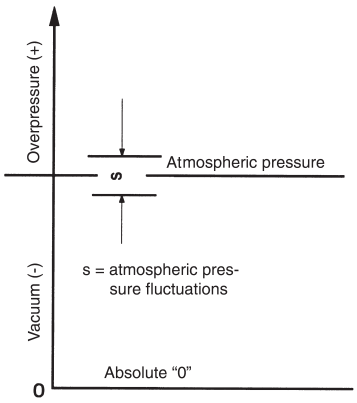

Pressure data

Overpressure Pressure **over** the relevant atmospheric pressure. The reference point is atmospheric pressure.

Vacuum Pressure **under** the relevant atmospheric pressure. The reference point is atmospheric pressure.

Absolute pressure Overpressure relative to absolute vacuum.

Differential pressure Difference in pressure between 2 pressure measuring points.

Relative pressure Overpressure or vacuum relative to atmospheric pressure.

Pressure data in all FEMA documents refers to relative pressure.

That is to say, it concerns pressure differentials relative to atmospheric pressure.
Overpressures have a positive sign, vacuums a negative sign.

Permissible working pressure (maximum permissible pressure)
The maximum working pressure is defined as the upper limit at which the operation, switching reliability and water tightness are in no way impaired (for values see Product summary).

Bursting pressure (test pressure)
Type-tested products undergo a pressure test certified by TÜV affirming that the bursting pressure reaches at least the values mentioned in the Product summary. During the pressure tests the measuring bellows are permanently deformed, but the pressurized parts do not leak or burst. The bursting pressure is usually a multiple of the permissible working pressure.

Setting range
Pressure range in which the cutoff pressure can be set with the setting spindle.

Pressure units

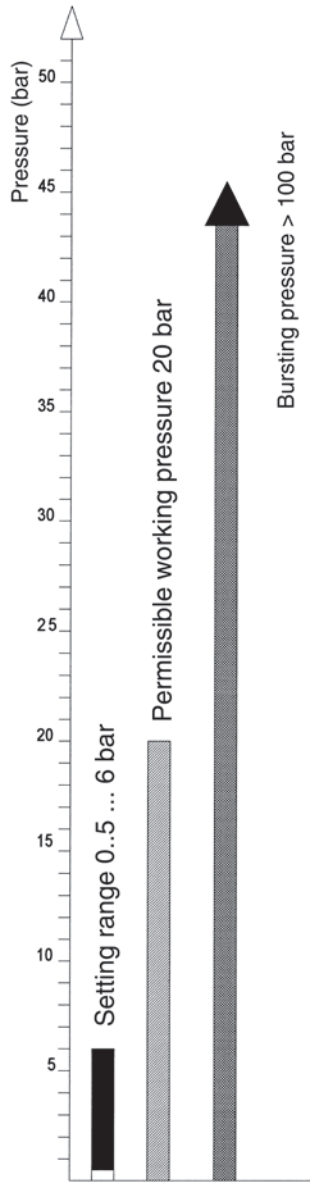

Pressure data for a pressure switchbased on the example of DWR625:
Setting range: 0.5-6 bar
Perm. working pressure: 20 bar
Bursting pressure: >100 bar

Unit	bar	mbar	Pa	kPa	MPa	(psi) lb/m²
1 bar	1	1000	10^5	100	0.1	14.5
1 mbar	0.001	1	100	0.1	10^{-4}	0.0145
1 Pa	10^{-5}	0.01	1	0.001	10^{-6}	$1.45 \cdot 10^{-4}$
1 kPa	0,01	10	1000	1	0.001	0,145
1 MPa	10	10^4	10^6	1000	1	145

In FEMA documents pressures are stated in **bar** or **mbar**.

Important:
All pressure data refers to overpressures or vacuums relative to atmospheric pressure.
Overpressures have a positive sign, vacuums a negative sign.

Definitions

Maximum pressure monitoring
RSP = SP – xd

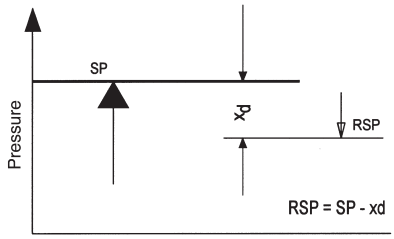

SP = switching point RSP = reset point
xd = switching differential (hysteresis)

Minimum pressure monitoring
RSP = SP + xd

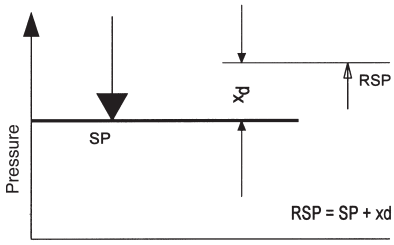

SP = switching point RSP = reset point
xd = switching differential (hysteresis)

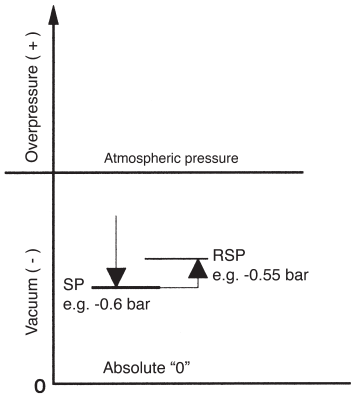

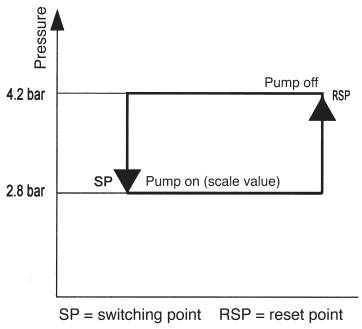

SP = switching point RSP = reset point

Switching differential

The switching differential (hysteresis) is the difference in pressure between the **switching point (SP)** and the **reset point (RSP)** of a pressure switch. Switching differential tolerances occur due to tolerances in the microswitches, springs and pressure bellows. Therefore the data in the product summaries always refers to average values. In the case of limiter functions the switching differential has no significance, as one is only interested in the switching point at which cutoff occurs, not the reset point. For a **controller function**, i. e. in the case of pressure switches used to switch a burner, pump etc. **on and off**, a pressure switch with an **adjustable switching differential** should be chosen. The switching frequency of the burner or pump can be varied by changing the switching differential.

Adjustable switching differential/ calibration
In the case of pressure switches with adjustable switching differential, the hysteresis can be set within the specified limits. The switching point (SP) **and** reset point (RSP) are precisely definable. When setting the pressure switch, the switching differential situation and the type of factory calibration must be taken into account. Some pressure switches (e.g. minimum pressure monitors of the DCM series) are calibrated under "falling" pressure, i.e. switching under falling pressure takes place at the scale value with the switching differential being above it. The device switches back at scale value + switching differential. If the pressure switch is calibrated under rising pressure, switching takes place at the scale value and the device switches back at scale value - switching differential (see direction of action). The calibration method is indicated in the data sheets.

Direction of action

In principle, any pressure switch can be used for both maximum pressure and minimum pressure monitoring. This excludes pressure limiters, whose direction of action (maximum or minimum) is predefined. The only thing to remember is that the scale reading may deviate by the amount of the switching differential. See example at bottom left: The scale value is 2.8 bar.

Maximum pressure monitoring
With rising pressure, switching takes place once the preset switching pressure is reached (SP). The reset point (RSP) is lower by the amount of the switching differential.

Minimum pressure monitoring
With falling pressure, switching takes place once the preset switching pressure is reached (SP). The reset point (RSP) is higher by the amount of the switching differential.

Direction of action in vacuum range
It is particularly important to define the direction of action in the vacuum range.
Rising does not mean a rising vacuum, but rising pressure (as viewed from absolute "0"). "Falling" pressure means a rising vacuum.
For example: Vacuum switch set to -0.6 bar falling means: Switching (SP) takes place under falling pressure (rising vacuum) at -0.6 bar. The reset point is higher by the amount of the switching differential (e.g. at -0.55 bar).

Setting a pressure switch

To define the switching point of a pressure switch exactly, it is necessary to determine the direction of action in addition to the pressure. "Rising" means that switching takes place at the set value when the pressure rises.
The reset point is then lower by the amount of the switching differential. "Falling" means exactly the opposite.

Please note when specifying the setting of a pressure switch:
In addition to the switching point it is also necessary to specify the direction of action (falling or rising).

Example for selection of a pressure switch:
A pump is to be turned on at 2.8 bar and off again at 4.2 bar.
Chosen type: DCMV6 according to data sheet DCM. Setting: Scale pointer to 2.8 bar (lower switching point). Switching differential to 1.4 bar (set according to pressure gauge).
Cutoff point: 2.8 bar +1.4 bar = 4.2 bar.

Operating mode
The pressure prevailing in the sensor housing (**1**) acts on the measuring bellows (**2**). Changes in pressure lead to movements of the measuring bellows (**2**) which are transmitted via a thrust pin (**4**) to the connecting bridge (**5**). The connecting bridge is frictionlessly mounted on hardened points (**6**). When the pressure rises the connecting bridge (**5**) moves upwards and operates the microswitch (**7**). A counter-force is provided by the spring (**8**), whose pre-tension can be modified by the adjusting screw (**9**) (switching point adjustment). Turning the setting spindle (**9**) moves the running nut (**10**) and modifies the pre-tension of the spring (**8**). The screw (**11**) is used to calibrate the microswitch in the factory. The counter pressure spring (**12**) ensures stable switching behaviour, even at low setting values.

1 = Pressure connection
2 = Measuring bellows
3 = Sensor housing
4 = Thrust pin
5 = Connecting bridge
6 = Pivot points
7 = Microswitch or other switching elements
8 = Setting spring
9 = Setting spindle (switching point adjustment)
10 = Running nut (switching point indicator)
11 = Microswitch calibration screw (factory calibration)
12 = Counter pressure spring

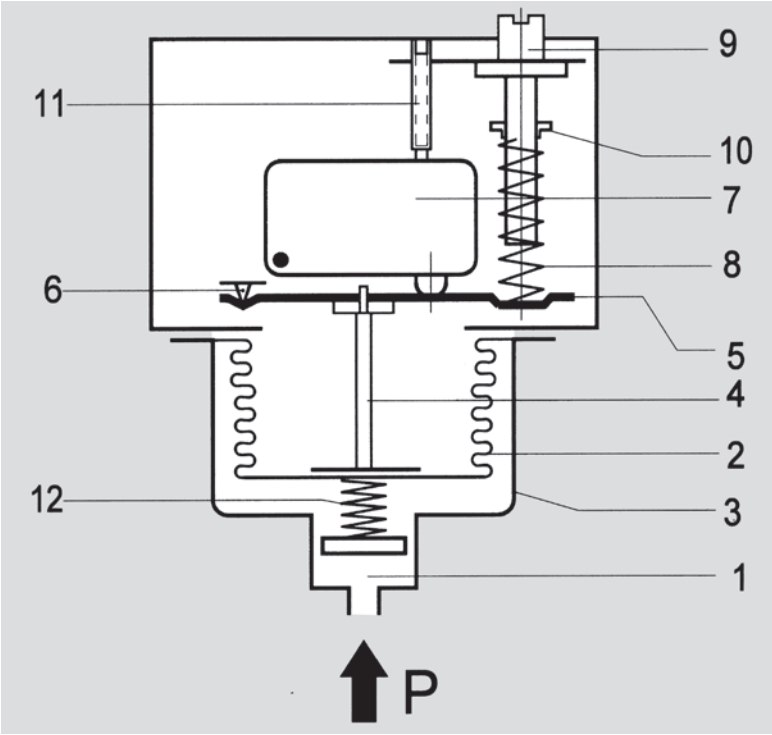

Pressure sensors
Apart from a few exceptions in the low-pressure range, all pressure sensors have measuring bellows, some made of copper alloy, but the majority of high-quality stainless steel. Measured on the basis of permitted values, the measuring bellows are exposed to a minimal load and perform only a small lifting movement. This results in a long service life with little switching point drift and high operating reliability. Furthermore, the stroke of the bellows is limited by an internal stop so that the forces resulting from the overpressure cannot be transmitted to the switching device. The parts of the sensor in contact with the medium are welded together without filler metals. The sensors contain no seals. Copper bellows, which are used only for low pressure ranges, are soldered to the sensor housing. The sensor housing and all parts of the sensor in contact with the medium can also be made entirely from stainless steel 1.4571 (DNS series). Precise material data can be found in the individual data sheets.

Pressure connection
The pressure connection on all pressure switches is executed in accordance with DIN 16288 (pressure gauge connection G 1/2A). If desired, the connection can also be made with a G 1/4 internal thread in accordance with ISO 228 Part 1.
Maximum screw-in depth on the G 1/4 internal thread = 9 mm.

Centring pin
In the case of connection to the G 1/2 external thread with seal in the thread (i.e. without the usual stationary seal on the pressure gauge connection), the accompanying centring pin is not needed. Differential pressure switches have 2 pressure connections (max. and min.), each of which are to be connected to a G 1/4 internal thread.

Principal technical data

Valid for all pressure switches of the DCM, DNM, DWAM, DWAMV, SDBAM, VCM, VNM, DNM, DWR, DGM, DNS and DDCM series that have a microswitch. The technical data of type tested units may differ slightly (please refer to particular type sheet).

	Standard version Plug connection	Terminal connection
	…200	…300
Switch housing	Die cast aluminium GDAISi 12	ie cast aluminium GDAISi 12
Pressure connection	G 1/2" external thread (pressure gauge connection) and G 1/4" internal thread. 1/4" internal thread for DDCM differential pressure switches	1/2" external thread (pressure gauge onnection) and G 1/4" internal thread. /4" internal thread for DDCM differential ressure switches
Switching function and connection scheme (applies only to version with microswitch)	Floating changeover contact. With rising pressure single pole switching from 3–1 to 3–2. 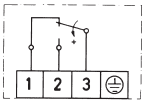	loating changeover contact. ith rising pressure ingle pole switching om 3–1 to 3–2 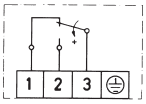
Switching capacity (for microswitches with a silver contact)	8 A at 250 VAC 5 A at 250 VAC inductive 8 A at 24 VDC 0.2 A at 110 VDC 0.3 A at 250 VDC min. 10 mA, 12 VDC	A at 250 VAC A at 250 VAC inductive A at 24 VDC .2 A at 110 VDC .3 A at 250 VDC in. 10 mA, 12 VDC
Mounting position	Preferably vertical (see technical data sheet)	referably vertical (see technical data sheet)
Protection class (in vertical position)	IP 54	65
Electrical connection	Plug connection	erminal connection
Cabel entry	Pg 11	16 x 1.5
Ambient temperature	–25 to +70 °C (exceptions: DWAM, DWAMV, SDBAM series –20 to +70 °C DGM and FD series: –25 to +60 °C DCM4016, 4025, 1000, VCM4156: –15 to +60 °C)	25 to +70 °C (exceptions: WAM, DWAMV, SDBAM series –20 to +70 °C GM and FD series: –25 to +60 °C CM4016, 4025, 1000, CM4156: –15 to +60 °C)
Switching point	Adjustable using the setting spindle	djustable using the setting spindle once the witch housing cover is removed
Hysteresis	Adjustable or not adjustable (see Product Summary)	djustable or not adjustable ee Product Summary)
Medium temperature	Max. 70 °C, briefly 85 °C	ax. 70 °C, briefly 85 °C
Relative humidity	15 to 95% (non-condensing)	5 to 95% (non-condensing)
Vacuum	Higher medium temperatures are possible provided the above limits for the switching device are ensured by suitable measures (e.g. siphon). All pressure switches can operate under vacuum. This will not damage the device (exception DCM1000).	
Repetition accuracy of switching points	< 1 % of the working range (for pressure ranges > 1 bar).	
Vibration resistance	No significant deviations up to 4 g.	
Mechanical durability (pressure sensor)	With sinusoidal pressure application and room temperature, 10 x 106 switching cycles. The expected life depends to a very large extent on the type of pressure application, therefore this figure can serve only as a rough estimate. With pulsating pressure or pressure impacts in hydraulic systems, pressure surge reduction is recommended.	
Electronical durability (microswitch)	100.000 switching cycles at nominal current 8 A, 250 VAC. A reduced contact load increases the number of possible switching cycles.	
Isolation values	Overvoltage category III, contamination class 3, reference surge voltage 4000 V. Conformity to DIN VDE 0110 is confirmed.	
Oil and grease-free	The parts of all pressure switches in contact with the medium are oil and grease free (except the HCD…and DPS…series). The sensors are hermetically sealed and contain no seals (also see ZF1979, special packing).	

Principal technical data

Valid for all pressure of the DCM, VCM, VNM, DNM, DWR, DGM, DNS, DWAM, DWAMV and DDCM series that have a microswitch. The technical data of type-tested units may differ slightly (please refer to particular type sheet).

	Ex-i-version	Ⓔx version (Ex-d)
	…500	…700
Switch housing	Die cast aluminium GDAlSi 12	Die cast aluminium GDAlSi 12
Pressure connection	G 1/2" external thread (pressure gauge connection) and G 1/4" internal thread. 1/4" internal thread for DDCM differential pressure switches	G 1/2" external thread (pressure gauge connection) and G 1/4" internal thread. 1/4" internal thread for DDCM differential pressure switches
Switching function and connection scheme (applies only to version with microswitch)	Floating changeover contact. With rising pressure single pole switching from 3–1 to 3–2 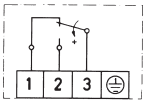	Floating changeover contact. With rising pressure single pole switching from 3–1 to 3–2 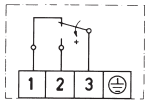
Switching capacity	max.: 100mA, 24VDC min.: 2mA, 5VDC	3 A at 250 VAC 2 A at 250 VAC inductive 3 A at 24 VDC 0.1 A at 250 VDC min. 2 mA, 24 VDC
Mounting position	Vertical	Vertical
Protection class (in vertical position)	IP 65	IP 65
Explosion protection Code	Ⓔx II 1/2G Ex ia IIC T6 Ga/Gb Ⓔx II 1/2D Ex ia IIIC T80 °C	Ⓔx II 2G Ex d e IIC T6 Gb Ⓔx II 1/2D Ex ta/tb IIIC T80 °C Da/Db
EC Type Examination Certificate Number	IBExU12ATEX1040	IBExU12ATEX1040
Electrical connection	Terminal connection	Terminal connection
Cabel entry	M 16 x 1.5	M 16 x 1.5
Ambient temperature	–25 to +60 °C (exceptions: DWAM series –20 to +60 °C DGM and FD series: –25 to +60 °C DCM4016, 4025, 1000, VCM4156: –15 to +60 °C)	–20 to +60 °C
Medium temperature	Max. 60 °C	Max. 60 °C
Relative humidity	15 to 95% (non-condensing)	15 to 95% (non-condensing)
Switching point	After removing switch housing cover	After removing switch housing cover
Hysteresis	Not adjustable	Not adjustable
Vacuum	Higher medium temperatures are possible provided the above limits for the switching device are ensured by suitable measures (e.g. siphon). All pressure switches can operate under vacuum. This will not damage the device.	
Repetition accuracy of switching points	< 1 % of the working range (for pressure ranges > 1 bar).	
Vibration resistance	No significant deviations up to 4 g.	
Mechanical durability (pressure sensor)	With sinusoidal pressure application and room temperature, 10 x 106 switching cycles. The expected life depends to a very large extent on the type of pressure application, therefore this figure can serve only as a rough estimate. With pulsating pressure or pressure impacts in hydraulic systems, pressure surge reduction is recommended.	
Electronical durability (microswitch)	100.000 switching cycles at nominal current 8 A, 250 VAC. A reduced contact load increases the number of possible switching cycles.	
Isolation values	Overvoltage category III, contamination class 3, reference surge voltage 4000 V. Conformity to DIN VDE 0110 is confirmed.	
Oil and grease-free	The parts of all pressure switches in contact with the medium are oil and grease free (except the HCD…and DPS…series). The sensors are hermetically sealed and contain no seals (also see ZF1979, special packing).	

Dimensioned drawings of switch housings (mm)

1 Housing 200 (plug connection)

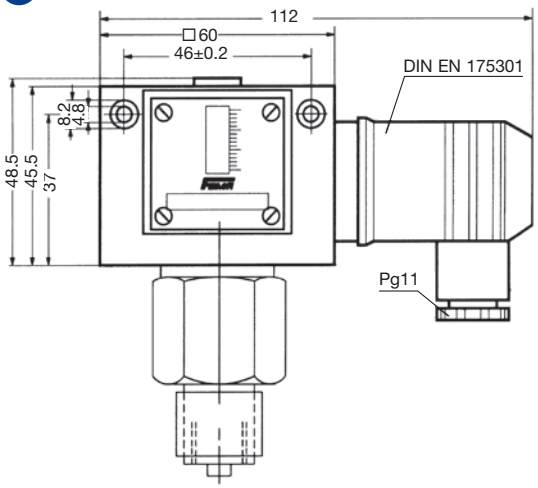

2 Housing 300 (terminal connection)

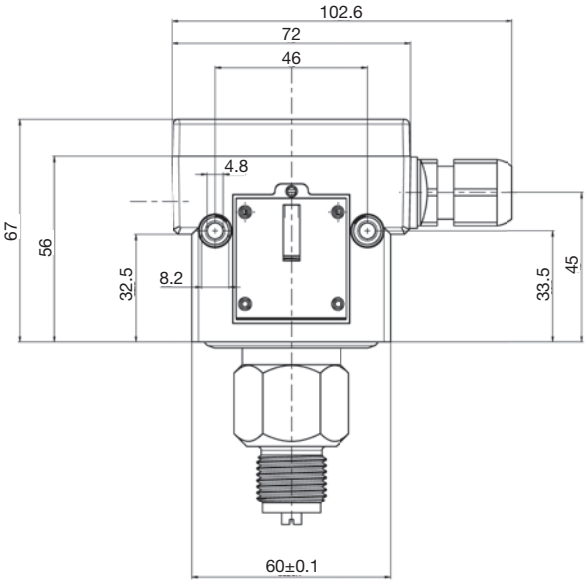

3 Housing 500 (terminal connection Ex-i)

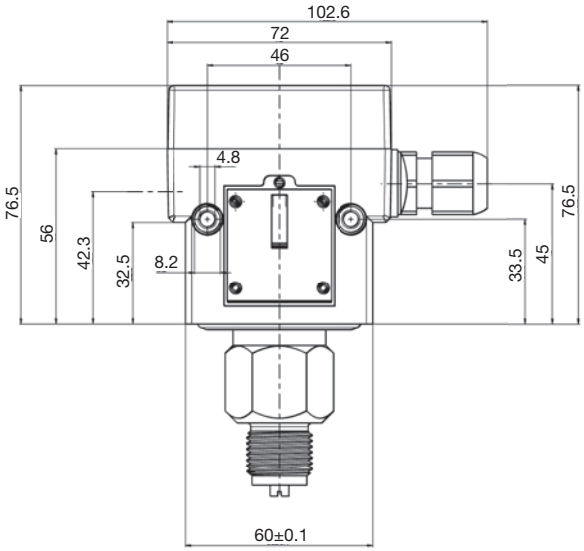

4 Housing 700 (terminal connection Ex-d)

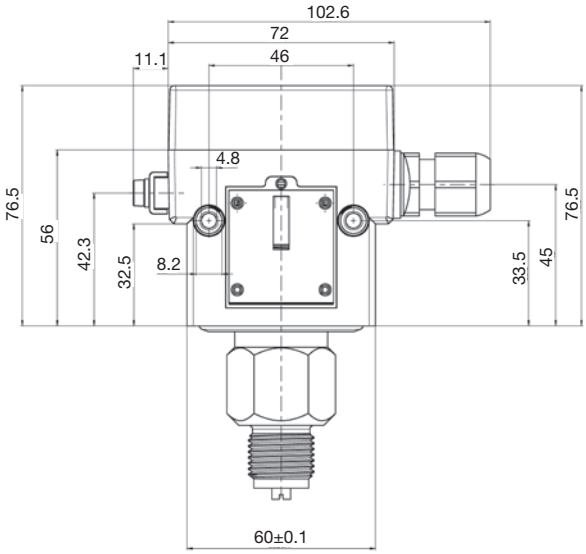

Dimensioned drawings of pressure sensors (mm)

10

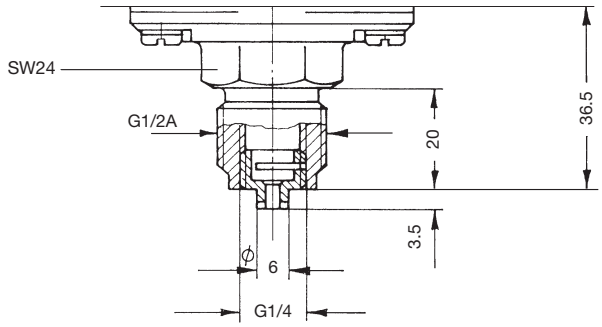

11

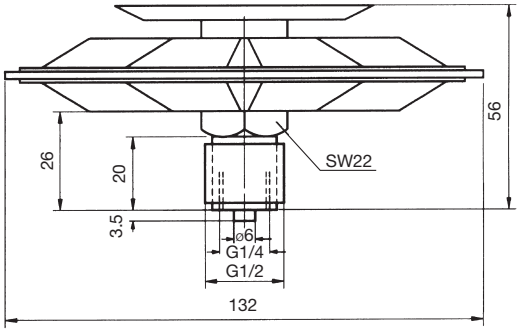

Dimensioned drawings of pressure sensors (mm)

12

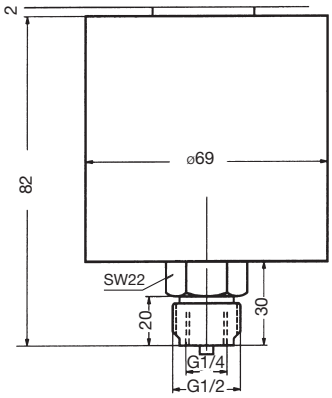

13

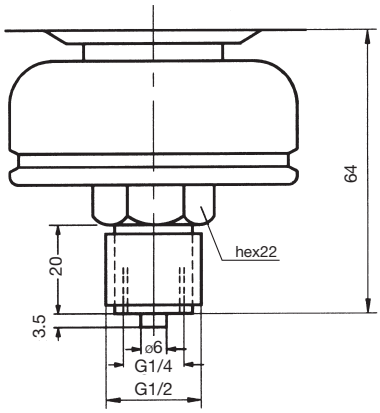

14

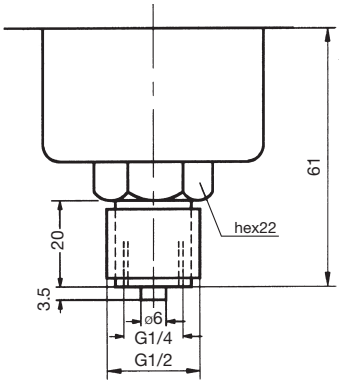

15

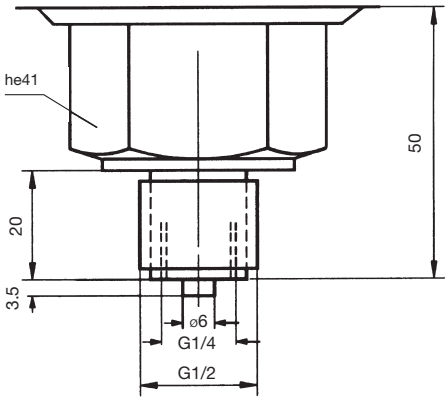

16 – 19

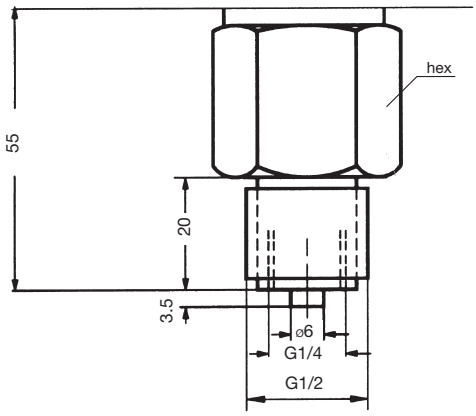

Dimensioned drawing	hex (mm)
16	22
17	24
18	30
19	32

20

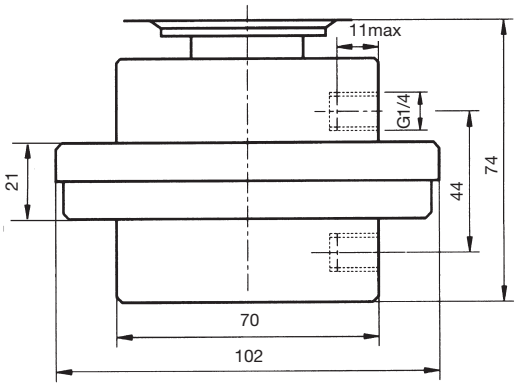

21

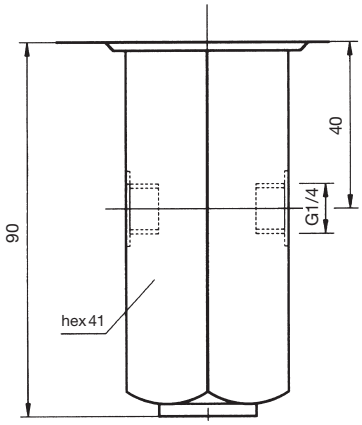

Setting instructions

Factory calibration of pressure switches

In view of tolerances in the characteristics of sensors and springs, and due to friction in the switching kinematics, slight discrepancies between the setting value and the switching point are unavoidable. The pressure switches are therefore calibrated in the factory in such a way that the setpoint adjustment and the actual switching pressure correspond as closely as possible in the middle of the range. Possible deviations are equally distributed on both sides.
The device is calibrated either for falling pressure (calibration at lower switching point) or for rising pressure (calibration at higher switching point), depending on the principal application of the type series in question.
Where the pressure switch is used at other than the basic calibration, the actual switching point moves relative to the set switching point by the value of the average switching differential. As FEMA pressure switches have very small switching differentials, the customer can ignore this where the switching pressure is set only roughly. If a very precise switching point is needed, this must be calibrated and checked in accordance with normal practice using a pressure gauge.

1. Calibration at lower switching point
Setpoint x_s corresponds to the lower switching point, the upper switching point x_o is higher by the amount of the switching differential x_d.

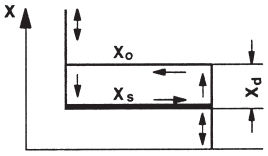

$X_o = X_s + X_d \quad X_s = X_o - X_d$

2. Calibration at upper switching point
Setpoint x_s corresponds to the upper switching point, the lower switching point x_u is lower by the amount of the switching differential x_d.

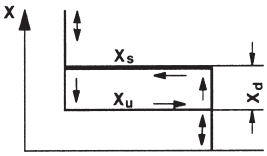

$X_u = X_s - X_d \quad X_s = X_u + X_d$

The chosen calibration type is indicated in the technical data for the relevant type series.

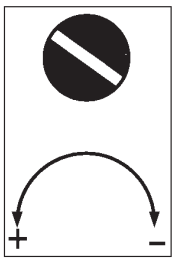

Clockwise: lower switching pressure

Anticlockwise: higher switching pressure

Direction of action of setting spindle

Setting switching pressures

Prior to adjustment, the securing pin above the scale must be loosened by not more than 2 turns and retightened after setting. The switching pressure is set via the spindle. The set switching pressure is shown by the scale.
To set the switching points accurately it is necessary to use a pressure gauge.

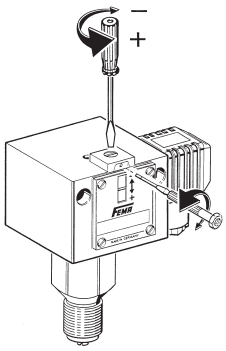

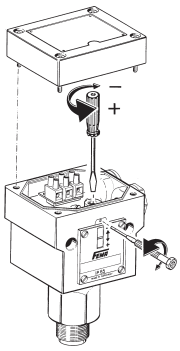

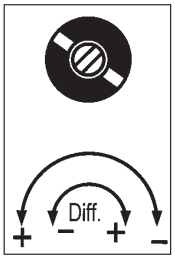

Clockwise: greater difference
Anticlockwise: smaller difference

With pressure switches from the DWAMV and DWR...-203 series, the direction of action of the differential screw is reversed.

Changing the switching differential (only for switching device with suffix "V", ZF203)

By means of setscrew within the spindle. The lower switching point is not changed by the differential adjustment; only the upper switching point is shifted by the differential. One turn of the differential screw changes the switching differential by about 1/4 of the total differential range. The switching differential is the hysteresis, i.e. the difference in pressure between the switching point and the reset point.

Lead sealing of setting spindle (for plug connection housing 200 only)

The setting spindle for setting the desired value and switching differential can be covered and sealed with sealing parts available as accessories (type designation: P2) consisting of a seal plate and capstan screw. The sealing parts may be fitted subsequently. The painted calibration screws are likewise covered.

Pressure switch with switching state locking (reclosing lock out)

In the case of limiter functions, the switching state must be retained and locked, and it may be unlocked and the system restarted only after the cause of the safety shutdown has been eliminated. There are two ways of doing this:

1. Mechanical locking inside the pressure switch
Instead of a microswitch with automatic reset, limiters contain a "bi-stable" microswitch. If the pressure reaches the value set on the scale, the microswitch trips over and remains in this position. The lock can be released by pressing the unlocking button (identified by a red dot on the scale side of the switching device). The lock can operate with rising or falling pressure, depending on the version. **The device can only be unlocked when the pressure has been reduced (or increased) by the amount of the predefined switching differential.** When selecting a pressure limiter, it is necessary to distinguish between maximum and minimum pressure monitoring. Ex-d versions cannot be equipped with internal locking.

Maximum pressure limitation

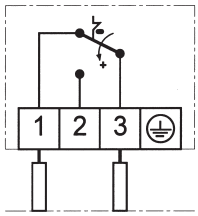

Switching and interlocking with rising pressure. Additional function ZF205.

Connection of control current circuit to terminals 1 and 3.

Minimum pressure limitation

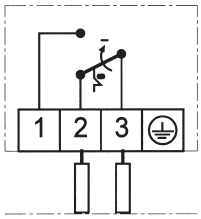

Switching and interlocking with falling pressure. Additional function ZF206.

Connection of control current circuit to terminals 2 and 3.

2. External electrical interlock in the control cabinet (suggested circuits)
A pressure monitor (microswitch with automatic reset) can also be used as a limiter if an electrical interlock is added. For pressure limitation in steam and hot water boilers, an external interlock is only permitted if it has been ascertained that the pressure monitor is "of special construction".

Maximum pressure limitation with external interlock

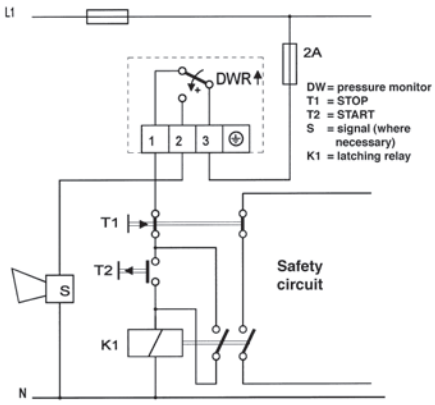

Minimum pressure limitation with external interlock

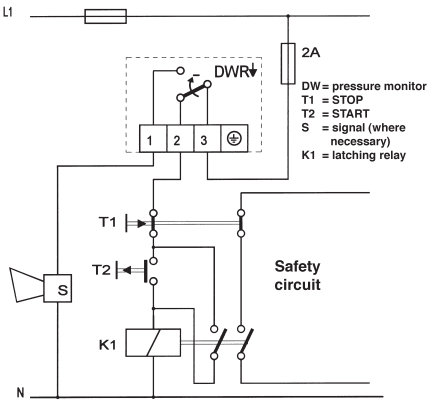

Where the above lock circuit is used, the requirements of DIN 57 116/VDE 0116 are met if the electrical equipment (such as contactors or relays) of the external interlock circuit satisfy VDE 0660 or VDE 0435.

Explanation of type designations – type codes

The type designations of FEMA pressure switches consist of a combination of letters followed by a number denoting the setting range. Additional functions and version variants are indicated by an extra code which is separated from the basic type by a hyphen. Ex-versions (explosion protection Ex-d) are identified by the prefix "Ex" in front of the type designation.

Basic version (based on the example of DCM series) **DCMXXX**		**With additional function** **DCMXXX-YYY**	**Ex-version** **Ex-DCMXXX**
DCM	→	Series code (e. g. DCM)	
XXX	→	Codes for pressure range	
YYY	→	Code for additional function	
Ex	→	Code for Ex-version	

Switch housing version	
DCMXXX	Basic version with plug connection housing
DCMXXX-2…	Basic version with plug connection housing
DCMXXX-3…	Terminal connection housing (300)
Ex-DCMXXX	Ex-d switching device (700)
DCMXXX-5…	Ex-i version (500)

Which additional function fits with which pressure switch?

	Plug connection, 200 series 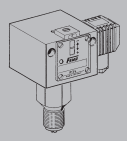 Additional function ZF			Terminal connection, 300/500 series 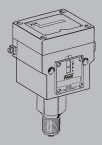 Additional function ZF				
	203	213	217	301 351	307	513	574 575	576 577
DCM/VCM	•[1]	•	•[1]	•	•[1]	•		
VNM/DNS/VNS	•	•	•	•	•	•		
DWAM		•		•		•		•
DDCM		•		•		•		
DWR	•	•		•		•	•	•
DGM		•		•		•	•	•

• available

[1] except DCM4016, DCM4025, VCM4156 and DCM1000

Combination of several additional functions is not possible!

Ex-versions (Ex-d) can only be supplied in basic form.
Additional functions are not possible.

Note to non-available items:
In our article master all the possible technical combinations are not created.
Therefore we recommend the previous request for clarification and selection of an alternative solution.

Pressure switches and pressure monitors

Additional functions / Connection schemes

	Plug connection, 200 series (IP 54)	Terminal connection, 300 series (IP 65)	Connection scheme	
Standard version (plug connection) Micro switch, single pole switching, switching differential not adjustable			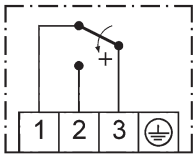	
Terminal connection housing (300)		**ZF301**	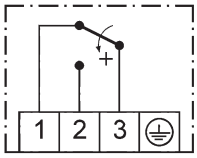	
Unit with adjustable switching differential	**ZF203**		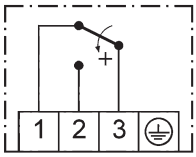	
Maximum pressure limiter with reclosing lockout **Interlocking with rising pressure** see DWR series	**ZF205**		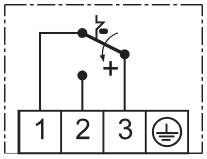	
Minimum pressure limiter with reclosing lockout **Interlocking with falling pressure** see DWR series	**ZF206**		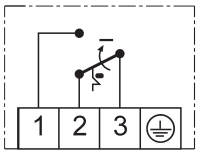	

Note to non-available items:
In our article master all the possible technical combinations are not created. Therefore we recommend the previous request for clarification and selection of an alternative solution.

	Plug connection 200 series (IP 54)	Terminal connection 300 series (IP 65)	Connection scheme	
Two micro switches, switching in parallel or in succession. Fixed switching differential, only possible with terminal connection housing. **State the switching differential** (not possible with all pressure switches).		**ZF307**	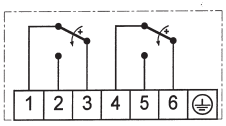	
Two micro switches, 1 plug switching in succession, no adjustable switching differential. **State the switching scheme *** (not possible with all pressure switches).	**ZF217 ***		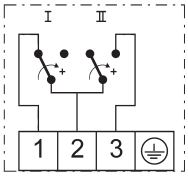 Connection scheme selection, see page 32	
Gold-plated silver contact, single pole switching (not available with adjustable switching differential). **Switching capacity:** max. 24 VDC, 100 mA, min. 5 VDC, 2 mA	**ZF213**		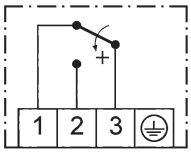	
Switch housing with surface protection (chemical version)		**ZF351**		

Note to non-available items:
In our article master all the possible technical combinations are not created. Therefore we recommend the previous request for clarification and selection of an alternative solution.

* Connection schemes for switching schemes, see page 32.
Please state interval when ordering!
Example for ordering: DCM10-217A-S.
Additional text: switching scheme A4

Example for ordering:
DCM 6 – 205
- 205 – Code of additional function (e.g. maximum limiter)
- 6 – Code for pressure range
- DCM – Sensor system

How to order:
Pressure switch
DCM6-205
or DCM6 with ZF205

Pressure switches and pressure monitors

Additional functions for Ex-i-equipment

DWAM6-576

· Housing (500) with terminal connection (IP 65), "blue" cable entry and terminals.
· Also available with resistor combination for line break and short-circuit monitoring (with isolating amplifier).

Important:
All pressure switches with the ZF5… additional functions listed here can only be operated in combination with a suitable isolating amplifier.

Additional information:
Our pressure switches and thermostats are considered to be "simple electrical equipment" within the meaning of standard EN60079-11: 2007. Testing is not mandatory for this type of equipment.

Additional functions for Ex-equipment		Connection scheme
Gold plated contact single pole switching, fixed hysteresis, not adjustable **Switching capacity:** max. 24 VDC, 100 mA, min. 5 VDC, 2 mA **For the power supply circuit:** U_i 24 V DC C_i 1 nF I_i 100 mA L_i 100 µH	**ZF513**	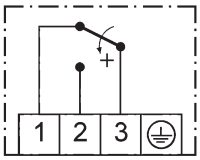
Versions with resistor combination for line break and short-circuit monitoring in control current circuit, ZF574 – ZF577 see DBS series, pages 50 – 52: **For the power supply circuit:** U_i 14 V DC R_i 1500 Ohm C_i 1 nF L_i 100 µH		
Normally closed contact with resistor combination, for **minimum pressure monitoring,** gold plated contact, plastic-coated housing (chemical version).	**ZF574**	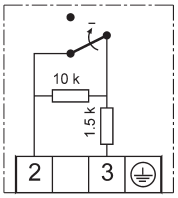
Normally closed contact **with reclosing lockout** and resistor combination, for **minimum pressure monitoring,** plastic coated housing (chemical version).	**ZF575**	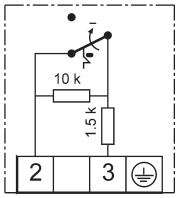
Normally closed contact with resistor combination, for **maximum pressure monitoring,** gold plated contact, plastic coated housing (chemical version).	**ZF576**	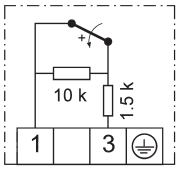
Normally closed contact **with reclosing lockout** and resistor combination, for **maximum pressure monitoring,** plastic-coated housing (chemical version).	**ZF577**	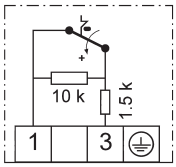

Note to non available items:
In our article master all the possible technical combinations are not created. Therefore we recommend the previous request for clarification and selection of an alternative solution.

Service functions

Devices with service functions will be produced according to the customer's specifications.
The system requires that these product combinations are identified in such a way as to prevent any possibility of confusion. These combinations are characterised by a product code with the suffix "-S" on the packaging label as well as separate labels with barcodes for each service function.

Service functions	Plug connection 200 series	Terminal connection 300 series	Ex-i/ Ex-d
Adjustment according to customer's instruction:			
- one switching point	**ZF1970***	**ZF1970***	**ZF1970***
- two switching points or defined switching differential	**ZF1972***	**ZF1972***	**–**
Adjustment and lead sealing according to customer's instruction:			
- one switching point	**ZF1971***	**–**	**–**
- two switching points or defined switching differential	**ZF1973***	**–**	**–**
Labelling of units according to customer's instruction with sticker	**ZF1978**	**ZF1978**	**ZF1978**
Special packing for oil and grease-free storage	**ZF1979**	**ZF1979**	**ZF1979**
Test reports according to EN 10 204			
- Certificate 2.2 based on non specific specimen test	**WZ2.2**	**WZ2.2**	**WZ2.2**
- Inspection test certificate 3.1 based on specific test	**AZ3.1B1**	**AZ3.1B1**	**AZ3.1B1**
- Inspection test certificate for FV separating diaphragms	**AZ3.1-V**	**AZ3.1-V**	**AZ3.1-V**

*** Switching point adjustment:** Please specify **switching point and direction of action** (rising or falling pressure).

Service functions are available for the following type series (including Ex-versions):
Pressure switches: DCM, DNM, DNS, VNS, VCM, VNM, DDCM, DWR, DWAM, DWAMV, SDBAM, DGM, FD

Ordering devices with service functions

Example:
Ordering 1 DCM6, set at 4 bar rising, identified with code PSH008 as requested by the customer and acceptance test certificate 3.1.
The order confirmation contains:

1 DCM6-S ("S" is need for factory = following lines belong to this item)
1 ZF1970: set to 4 bar rising
1 ZF1978: PSH008
1 AZ3.1B1

Included items: Labels with barcodes on the packaging:
DCM6-S
ZF1970: set to 4 bar rising
ZF1978: PSH008
AZ3.1B1

Pack contents: 1 DCM6 (without "S" suffix) marked
1 ZF1970: set to 4 bar rising
1 ZF1978: PSH008
1 AZ3.1 B1 will be sent by extra post
1 Installation and operating instructions

S2 type series

Pressure switches with 2 microswitches - technical data

FEMA pressure switches of the **DCM** (except DCM1000, DCM4016 and DCM4025), **VCM** (except VCM4156), **VNM** series can be equipped with 2 microswitches.

This is not possible with any other type series or with Ex-versions.

Technical data

Standard equipment
The standard equipment of every two stage pressure switch includes a switching device with 2 microswitches, both single pole switching. Switch I monitors the low pressure, switch II the higher pressure. The setting ranges indicated in the data sheets for the basic types apply to the two stage pressure switches as well. It should be noted that the switching differentials of the individual microswitches may not be exactly the same due to component tolerances.

Switching difference (see table, page 31)
The switching interval of the two microswitches is the difference (in bar or mbar) between the switching points of the two micro switches.

Example for ZF307:
When the pressure rises (e.g. 2.8 bar), a two stage pressure switch turns on a warning light, and if the pressure continues to rise (e.g. 3.2 bar) the system shuts down. The switching interval is 3.2-2.8 = 0.4 bar. The following applies to all versions:
The switching interval remains constant over the whole setting range of the pressure switch. If the switching pressure setting is changed with the setting spindle, the switching interval does not change - the switching points are moved in parallel.

Switching differential (see table page 31)
The switching differential, i.e. the hysteresis of the individual micro switches, corresponds to the values of the relevant basic version referred to in the Product summary. In the case of two stage pressure switches, **the switching differential of the individual micro switches is not adjustable.**

Versions
Two stage pressure switches are available in three different versions, each identified by a ZF number. The versions differ in terms of their connection schemes and electrical connection types (terminal or plug connection).

The applicable data sheet for the basic types contains the technical data for the two stage pressure switches. This includes all limits of use, such as temperature, maximum pressure, mounting position, protection class, electrical data etc. The principal dimensions are the same as for single-stage pressure switches with comparable pressure ranges and design features.

Additional function	Switching difference between the two micro switches	Electrical connection	Connection diagram	Ordering information required
ZF307 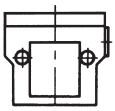	**Factory setting** according to customer's instruction Switching difference fixed	**Terminal connection** (All terminals of both microswitches are accessible (6 terminals)	2 x single pole switching 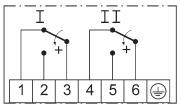	1. Basic type with ZF307 2. Switching points I and II, with direction of action in each case (rising or falling pressure) Example: DCM16-307 Switching point I: 10 bar falling Switching point II: 12 bar falling or switching interval only.
ZF217 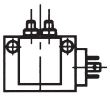	**Adjustable** via adjustment knobs I and II in accordance with "Switching difference" table	**Plug connection** in accordance with DIN EN175301 (3-prong + earth conductor) Function-appropriate internal wiring in accordance with "Switching functions" table	Example selection in accordance with "Switching schemes" table, page 32. 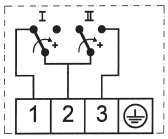	1. Basic type with ZF217 2. **Switching scheme** For example: DCM16-217/B 4 Since all values are adjustable within the specified limits, no further data is required.

Note on ordering additional function ZF217

Switching scheme	Switching device	Ordering position	Additional text
A1	A	DCM6-217A-S	Switching scheme A1
A2	C	DCM6-217C-S	Switching scheme A2
A3	C	DCM6-217C-S	Switching scheme A3
A4	A	DCM6-217A-S	Switching scheme A4
B1	B	DCM6-217B-S	Switching scheme B1
B2	D	DCM6-217D-S	Switching scheme B2
B3	D	DCM6-217D-S	Switching scheme B3
B4	B	DCM6-217B-S	Switching scheme B4
C1	B	DCM6-217B-S	Switching scheme C1
C2	D	DCM6-217D-S	Switching scheme C2
C3	D	DCM6-217D-S	Switching scheme C3
C4	B	DCM6-217B-S	Switching scheme C4
D1	A	DCM6-217A-S	Switching scheme D1
D2	C	DCM6-217C-S	Switching scheme D2
D3	C	DCM6-217C-S	Switching scheme D3
D4	A	DCM6-217A-S	Switching scheme D4

S2 type series (selection)

ZF217 and ZF307 pressure switches with two microswitches and switching difference

Switching difference of two stage pressure switches (ZF217, ZF307)

Type series S2 ZF217 ZF307		Higher pressure 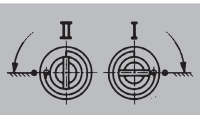 Lower pressure		
	min. switching difference (ZF217)	**max. switching difference (mean values) (ZF217,ZF307)**		
Type	**Factory default (parallel) ZF307**	**switching scheme A1/A3/B2/B4 C1/C3/D2/D4 + ZF 307**	**switching scheme A2/A4/C2/C4**	**switching scheme B1/B3/D1/D3**
DCM06	40 mbar	165 mbar	190mbar	140mbar
DCM025	20 mbar	140 mbar	160mbar	120mbar
DCM1	40 mbar	240 mbar	280mbar	200mbar
DCM3	0,1 bar	0,65 bar	0,75bar	0,55bar
DCM6	0,15 bar	0,95 bar	1,2bar	0,8bar
DCM10	0,25 bar	1,6 bar	1,85bar	1,35bar
DCM16	0,3 bar	2,0 bar	2,3bar	1,7bar
DCM25	0,6 bar	4,0 bar	4,6bar	3,4bar
DCM40	0,9 bar	6,0 bar	6,9bar	5,1bar
DCM63	1,3 bar	8,5 bar	9,8bar	7,2bar
DNM025	35 mbar	215 mbar	240mbar	180mbar
VCM095	40 mbar	300 mbar	340mbar	260mbar
VCM101	40 mbar	260 mbar	300mbar	220mbar
VCM301	20 mbar	100 mbar	120mbar	80mbar
VNM111	50 mbar	310 mbar	360mbar	260mbar

Switching devices with adjustable switching difference

Additional function ZF217

On switching devices with additional function ZF217, the switching differene is continuously adjustable via two adjustment knobs I and II accessible from outside. The maximum possible switching difference is stated in the "Switching difference" table.
Turning adjustment knob I clockwise produces a lower switching point for microswitch I
Turning adjustment knob II anticlockwise produces a higher switching point for microswitch II
Adjustment knobs I and II have an internal stop to prevent the micro switches from being adjusted beyond the effective range.

Adding together the adjustments on knobs I and II results in the switching difference between the two micro switches. Changes made with the setting spindle do not affect the switching difference. The switching difference remains constant over the whole setting range of the spindle. The two switching points are moved up or down in parallel.

Recommended adjustment method for switching devices with ZF217

1. Set adjustment knobs I and II to their basic positions.
   Turn adjustment knob I anticlockwise as far as possible.
   Turn adjustment knob II clockwise as far as possible.
2. Adjust the setting spindle **S** by the scale to a value midway between the desired upper and lower switching points.
3. With pressure applied, set the lower switching point with adjustment knob I.
4. In the same way as in step 3, set the upper switching point with adjustment knob II.
5. If the desired upper and lower switching points cannot be reached, turn the setting spindle **S** in the appropriate direction and repeat steps 3 and 4.

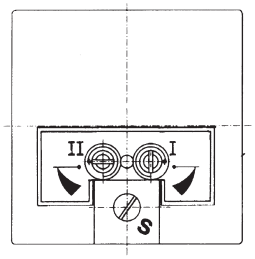

S2 type series

Two stage pressure switches, switching schemes for ZF217

Function appropriate internal configuration of microswitches I and II, switching scheme selection table. The switch position shown corresponds to the pressureless state. On the horizontal axis is the switching function of microswitch I (A–D); on the vertical axis is the switching function of microswitch II (1–4). At the intersection is the switching scheme which satisfies both conditions (e.g. A 2).

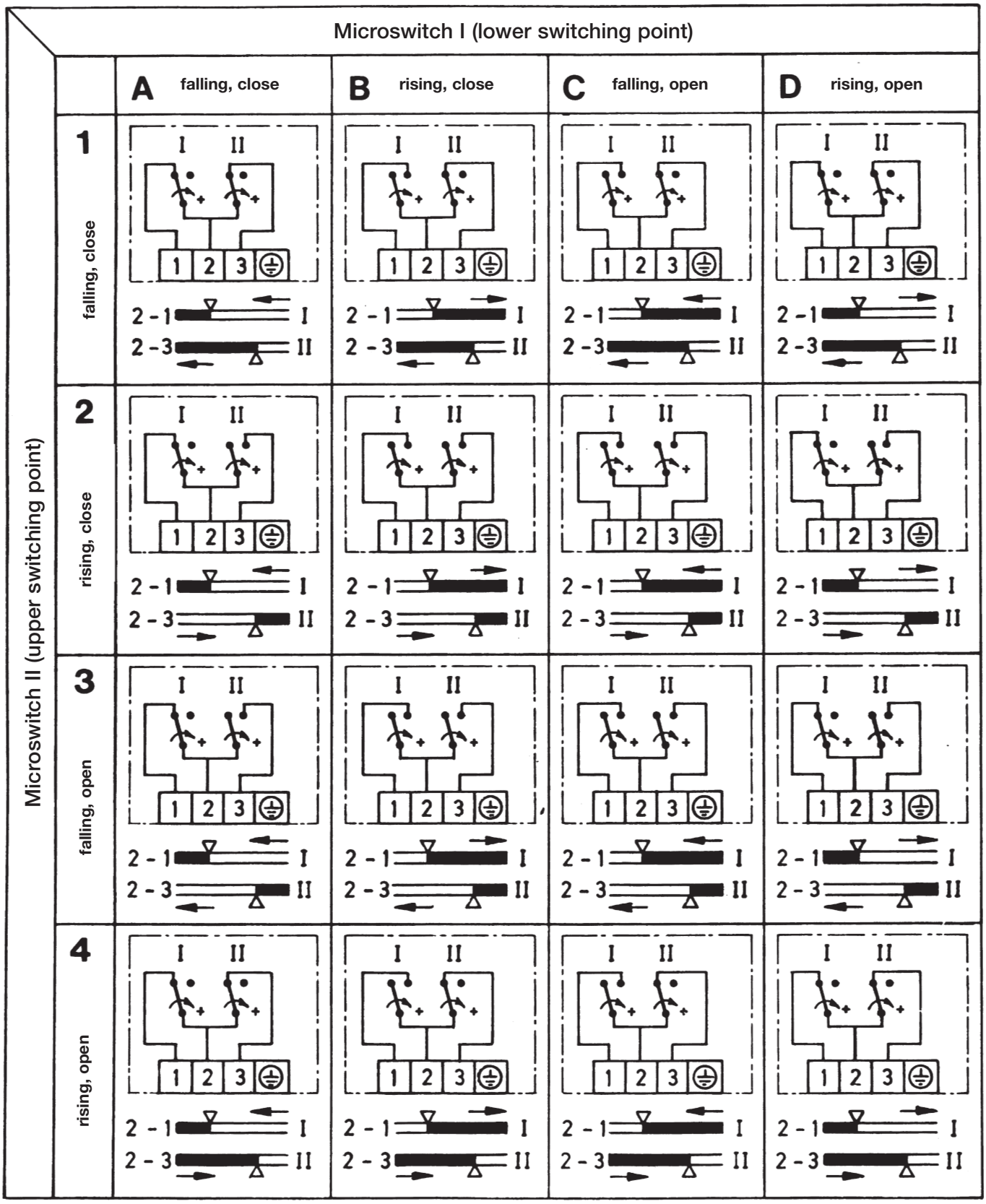

Information required when ordering:
As well as the basic type (e.g. DCM10) and the switching scheme (e.g. A 2), for factory setting it is also necessary to indicate the switching points and direction of action:
Example: DCM10-217C-S, switching scheme: A2, Switch I: 6.5 bar falling, Switch II: 7.5 bar rising.

S2 type series

Examples of use for two stage pressure switches

Pressure monitoring and controlling can be greatly simplified by using pressure monitors with two built-in microswitches which can be made to operate one after the other under rising or falling pressure. For example, minimum and maximum pressure monitoring can be achieved with only **one** pressure switch, doing away with the need for a second pressure switch (including the cost of installation). Step switching, e.g. pressure-dependent control of a two-stage pump, is of course also possible using this special series.

For pressure dependent control of automatic expansion valves and pressure holding devices

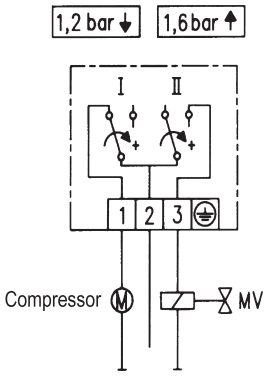

Example 1:

Requirement

Pressure holding devices and automatic expansion valves usually have a gas cushion whose pressure must be kept constant within a certain range. If the pressure is too low, a compressor is switched on. If the pressure is too high, a solenoid valve must be opened to vent the gas. Between these two levels is a neutral zone, in which the compressor and the solenoid valve are at rest.

Solution

All pressure switches of types DCM each with additional function ZF217 and switching scheme A 2, are suitable. All pressure ranges listed in the technical documents are possible. Example for ordering: see page 32

Switching function / connection scheme

Switch I: With falling pressure, contact 1–2 closes (compressor on)
With rising pressure, contact 1–2 opens (compressor off)

Switch II: With rising pressure, contact 2–3 closes (valve open)
With falling pressure, contact 2–3 opens (valve closed).
In between there is a neutral zone in which the compressor is not switched on and the solenoid coil is not energized (off position).

Minimum and maximum pressure monitoring in a nitrogen line

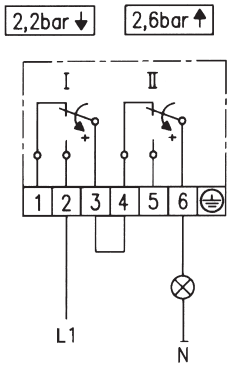

Example 2:

Requirement

In a process engineering system, the pressure in a nitrogen line has to be monitored. A green signal lamp indicates that the pressure in the line is between 2.2 and 2.6 bar. If the pressure goes below 2.2 bar or above 2.6 bar, the indicator lamp goes out and the system shuts down.

Solution

The first contact of a DCM3–307 pressure switch with 2 microswitches opens under falling pressure at 2.2 bar; the second microswitch opens under rising pressure at 2.6 bar. If the pressure is >2.2 bar or <2.6 bar, the circuit is closed via both microswitches and the signal lamp is lit.

Liquids and gases

DCM025

DCM/DNM

Mechanical pressure switches

This universal pressure switch can be used in general mechanical engineering and the printing machine industry, as well as in pneumatics and hydraulics.

➔ p. 36
Ex ➔ p. 62

Liquids and gases

DNS6-351

DNS/VNS

Pressure and vacuum switches with stainless steel sensors (1.4571)

Pressure switches of the DNS series are suitable for monitoring and controlling pressures in chemical plants, process engineering and any situation where the pressure of aggressive liquids and gases must be monitored. All components of the sensor system are made of high-quality stainless steel (1.4571) and welded using the latest methods without filler metals. The pressure sensor is gasket-free plasma-welded.

➔ p. 37 – 38
Ex ➔ p. 63

Liquids and gases

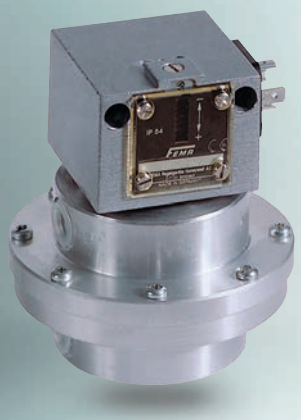

DDCM252

DDCM

Differential pressure switches

FEMA differential pressure monitors are suitable for monitoring and controlling differential pressures, flow monitoring and automatic supervision of filter systems. A double chamber system with stainless steel bellows or Perbunan diaphragm detects the difference between the two applied pressures. The desired switching pressure is continuously adjustable within the ranges mentioned in the product summary. All differential pressure monitors can also be used in the vacuum range. The switching differential is not adjustable.

➔ p. 39
Ex ➔ p. 64

Liquids and gases

VCM301

VCM/VNM

Negative pressure switches (vacuum switches)

FEMA negative pressure switches detect the pressure difference relative to atmospheric pressure. All data relating to the switching pressure ranges and thus also the scale divisions on the switching devices are to be understood as the difference in pressure between the relevant atmospheric pressure and the set switching pressure. The "zero" reference point on the scale of the unit corresponds to the relevant atmospheric pressure.

➔ p. 40
Ex ➔ p. 65

10 selection criteria

CHECKLIST

1	**Medium**	Steam, hot water, fuel gases, air, flue gases, liquid gas, liquid fuels, other media.
1a	**Sensor material**	Stainless steel, non-ferrous metals, plastics (e.g. Perbunan). Are all sensor materials resistant to the medium? Oil and grease-free for oxygen?
2	**Type approval**	Is type approval (TÜV, DVGW, ATEX, etc.) required for the intended application?
3	**Function**	Monitors, limiters. Safety-engineered pressure limiters.
4	**Direction of action**	Is the maximum pressure or minimum pressure to be monitored? Does the pressure switch have a controller function (e.g. turns pump on and off)?
5	**Setting range**	The desired setting range can be found in the Product Summaries.
6	**Switching differential** for controllers / monitors only	The adjustable switching differential is only important in the case of pressure switches with a controller function. For limiter functions the switching differential (hysteresis) has no significance.
7	**Maximum working pressure**	The maximum working pressure listed in the tables must be equal to or greater than the maximum system pressure.
8	**Environmental conditions**	Medium temperature / ambient temperature / protection class / humidity / Ex-zone / Outdoor installation – protective measures.
9	**Type of construction/ size Pressure connection**	Size, installation position, installation method, pressure connection with seal.
10	**Electrical data Switching capacity**	Switching element / changeover contact / normally closed contact / normally open contact / switching capacity / interlocking / gold contacts / contactless signal transmission.

This list of criteria does not claim to be complete.
However, all items must be checked.
The stated sequence is expedient but not mandatory.

DCM25

DCM/DNM

Pressure switches and pressure monitors for overpressure

This universal pressure switch can be used in general mechanical engineering and the printing machine industry, as well as in pneumatics and hydraulics.

SIL 2 according IEC 61508-2

SIL2 FUNCTIONAL SAFETY

Technical data

Pressure connection
External thread G 1/2 (pressure gauge connection) according to DIN 16 288 and internal thread G 1/4 according to ISO 228 Part 1.

Switching device
Robust housing (200) made of seawater resistant die cast aluminium GD Al Si 12.

Protection class
IP 54, in vertical position.

Pressure sensor materials

DNM025…DCM63	Metal bellows: 1.4571 Sensor housing: 1.4104
DCM025 – DCM 1	Metal bellows: Cu Sensor housing: Cu + Ms
DCM4016/ DCM4025	Diaphragm: Perbunan Sensor housing: 1.4301
DCM1000	Diaphragm: Perbunan Sensor housing: Brass

Mounting position
Vertically upright and horizontal. DCM4016 and 4025 vertically upright.

Ambient temp. at switching device
–25…+70 °C, except: DCM4016, 4025, 1000: –15…+60 °C

Max. medium temperature
The maximum medium temperature at the pressure sensor must not exceed the permitted ambient temperature at the switching device. Temperatures may reach 85°C for short periods). Higher medium temperatures are possible provided the above limit values for the switching device are ensured by suitable measures (e.g. siphon).

Mounting
Directly on the pressure line (pressure gauge connection) or on a flat surface with two 4 mm Ø screws.

Switching pressure
Adjustable from outside with screw driver.

Switching differential
Not adjustable with DCM and types. Adjustable from outside with DCMV types. For values see Product Summary.

Contact arrangement
Single pole change over switch.

Switching capacity	250 VAC (ohm)	250 VAC (ind)	250 VDC (ohm)	24 VDC (ohm)
Normal	8 A	5 A	0.3 A	8 A

Type	Setting range	Switching differential (Tolerance)	Max. permissible pressure	Materials in-contact with medium	Dimen-sioned drawing
Switching differential not adjustable					**page 21 + 22**
DCM4016	1…16 mbar	0,7 ... 3 mbar	1 bar	Perbunan	1 + 11
DCM4025	4…25 mbar	1 ... 3 mbar	1 bar	+ 1.4301	
DCM1000	10…100 mbar	2 ... 12 mbar	10 bar	Perbunan + MS	1 + 10
DCM025	0,04…0,25 bar	10 ... 30 mbar	6 bar	Cu + Ms	
DCM06	0,1…0,6 bar	10 ... 50 mbar	6 bar	Cu + Ms	1 + 14
DCM1	0,2…1,6 bar	20 ... 60 mbar	6 bar	Cu + Ms	
DNM025	0,04…0,25 bar	20 ... 40 mbar	6 bar		1 + 15
DCM3	0,2…2,5 bar	60 ... 140 mbar	16 bar	Sensor	
DCM6	0,5…6 bar	0,14 ... 0,26 bar	16 bar	housing	1 + 18
DCM625	0,5…6 bar	0,15 ... 0,35 bar	25 bar	1.4104	
DCM10	1…10 bar	0,2 ... 0,4 bar	25 bar	+	1 + 17
DCM16	3…16 bar	0,2 ... 0,6 bar	25 bar	Pressure	
DCM25	4…25 bar	0,3 ... 1,1 bar	60 bar	bellow	
DCM40	8…40 bar	0,4 ... 1,6 bar	60 bar	1.4571	1 + 16
DCM63	16…63 bar	0,6 ... 2,6 bar	130 bar		
DCM63-406	40...75 bar	0,5 ... 3,0 bar	130 bar		
Switching differential adjustable					
DCMV025	0,04…0,25 bar	0,03…0,4 bar	6 bar		
DCMV06	0,1…0,6 bar	0,04…0,5 bar	6 bar	Cu + Ms	1 + 14
DCMV1	0,2…1,6 bar	0,07…0,55 bar	6 bar		
DCMV3	0,2…2,5 bar	0,15…1,5 bar	16 bar	Sensor	
DCMV6	0,5…6 bar	0,25…2,0 bar	16 bar	housing	1 + 18
DCMV625	0,5…6 bar	0,40…2,5 bar	25 bar	1.4104	
DCMV10	1…10 bar	0,5…2,8 bar	25 bar	+	1 + 17
DCMV16	3…16 bar	0,7…3,5 bar	25 bar	Pressure	
DCMV25	4…25 bar	1,3…6,0 bar	60 bar	bellow	
DCMV40	8…40 bar	2,2…6,6 bar	60 bar	1.4571	1 + 16
DCMV63	16…63 bar	3,0…10 bar	130 bar		

For smaller pressure ranges see also VCM, DGM, HCD and DPS sheets.
For additional functions refer page 26 – 28.

Calibration
The **DCM** series is calibrated for falling pressure. This means that the adjustable switching pressure on the scale corresponds to the switching point at falling pressure. The reset point is higher by the amount of the switching differential. (See also page 23, 1. Calibration at lower switching point).

Ex-DCM/DNM
see page 62

DNS3-201

DNS/VNS

Pressure switches and vacuum switches with stainless steel sensors (1.4571)

Pressure switches of the DNS series are suitable for monitoring and controlling pressures in chemical plants, process engineering and any situation where the pressure of aggressive liquids and gases must be monitored.

All components of the sensor system are made of highquality stainless steel (1.4571) and welded using the latest methods without filler metals. The pressure sensor is gasket free plasma welded.

SIL 2 according IEC 61508-2

SIL2 FUNCTIONAL SAFETY

Technical data

Pressure connection
External thread G 1/2 (pressure gauge connection) according to DIN 16 288 and internal thread G 1/4 according to ISO 228 Part 1.

Switching device
Robust housing (200) made of seawater resistant die cast aluminium GD Al Si 12.

Protection class
IP 54, in vertical position.

Pressure sensor materials
Pressure bellows and all parts in contact with medium. X 6 Cr Ni Mo Ti 17122 Material no. 1.4571

Mounting position
Vertically upright and horizontal.

Max. ambient temperature at switching device
–25…+70 °C.

Max. medium temperature
The maximum medium temperature at the pressure sensor must not exceed the permitted ambient temperature at the switching device. Temperatures may reach 85°C for short periods.
Higher medium temperatures are possible provided the above limit values for the switching device are ensured by suitable measures (e.g. siphon).

Mounting
Directly on the pressure line (pressure gauge connection) or on a flat surface with two 4 mm Ø screws.

Switching pressure
Adjustable from outside with screw driver.

Switching differential
For values see Product Summary.

Contact arrangement
Single pole change over switch.

Switching capacity	250 VAC (ohm)	(ind)	250 VDC (ohm)	24 VDC (ohm)
Normal	8 A	5 A	0.3 A	8 A

Plastic coating
The diecast aluminium housing in GD Al Si is chromated and stove enamelled with resistant plastic. Corrosion tests with 3% saline solution and 30 temperature changes from +10 to +80°C showed no surface changes after 20 days.

Product Summary

Type	Setting range	Switching differential (Tolerance)	Max. permissible pressure	Dimensioned drawing
Switching differential not adjustable				page 21 + 22
VNS301-201	-250…+100 mbar	30 ... 60 mbar	3 bar	
VNS111-201	-1*…+0,1 bar	30 ... 70 mbar	6 bar	
DNS025-201	0,04…0,25 bar	20 ... 40 mbar	6 bar	1 + 15
DNS06-201	0,1…0,6 bar	10 ... 50 mbar	6 bar	
DNS1-201	0,2...1,6 bar	40 ... 80 mbar	6 bar	
DNS3-201	0,2…2,5 bar	60 ... 140 mbar	16 bar	
DNS6-201	0,5…6 bar	0,07 ... 0,23 bar	16 bar	1 + 18
DNS10-201	1…10 bar	0,2 ... 0,4 bar	16 bar	
DNS16-201	3…16 bar	0,3 ... 0,7 bar	25 bar	1 + 17
Switching differential adjustable				
VNS111–203	–1*…+0,1 bar	90 – 550 mbar	6 bar	1 + 15
DNS06–203	0,1…0,6 bar	80 – 600 mbar	6 bar	
DNS3–203	0,2…2,5 bar	0,15 – 1,5 bar	16 bar	1 + 18
DNS6–203	0,5…6 bar	0,25 – 2,0 bar	16 bar	
DNS10–203	1…10 bar	0,5 – 2,5 bar	16 bar	1 +17
DNS16–203	3…16 bar	0,8 – 3,5 bar	25 bar	

* At very high vacuums, close to the theoretical maximum of –1 bar, the switch may not be usable in view of the special conditions of vacuum engineering. However, the pressure switch itself will not be damaged at maximum vacuum.

Calibration

The **DNS** and **VNS** series are calibrated for falling pressure. This means that the adjustable switching pressure on the scale corresponds to the switching point at falling pressure. The reset point is higher by the amount of the switching differential. (See also page 23, 1. Calibration at lower switching point).

Ex-DNS/VNS
see page 63

CE

Protection Class:
IP 54

FEMA by Honeywell

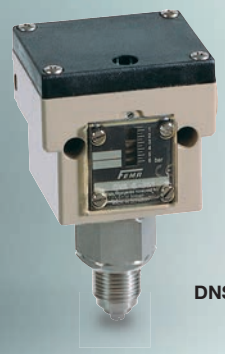

DNS6-351

DNS/VNS

Pressure and vacuum switches with stainless steel sensors (1.4571)

Chemical version (switching housing with surface protection)
Pressure switches of the DNS series are suitable for monitoring and controlling pressures in chemical plants, process engineering and any situation where the pressure of aggressive liquids and gases must be monitored. All components of the sensor system are made from highquality stainless steel (1.4571) and welded using the latest methods without filler metals. The pressure sensor is gasket free plasma welded.

SIL 2 according IEC 61508-2

Technical data

Pressure connection
External thread G 1/2" (pressure gauge connection) according to DIN 16 288 and internal thread G 1/4" according to ISO 228 Part 1.

Switching device
Robust housing (300) made of seawater resistant die cast aluminium GD Al Si 12.

Protection class
IP 65, in vertical position

Pressure sensor materials
Pressure bellows and all parts in contact with medium X 6 Cr Ni Mo Ti 17122 Material no. 1.4571

Mounting position
Vertically upright and horizontal

Max. ambient temperature at switching device
–25 to +70 °C

Max. medium temperature
The maximum medium temperature at the pressure sensor must not exceed the permitted ambient temperature at the switching device. Temperatures may reach 85 °C for short periods. Higher medium temperatures are possible provided the upper limit at the switching device is ensured by suitable measures (e.g. siphon).

Plastic coating
The die cast aluminium housing in GD Al Si is chromated and stove-enamelled with resistant plastic. Corrosion tests with 3% saline solution and 30 temperature changes from +10 to +80°C showed no surface changes after 20 days.

Contact arrangement
Single pole change over switch.

Switching capacity	250 VAC (ohm)	250 VAC (ind)	250 VDC (ohm)	24 VDC (ohm)
Normal	8 A	5 A	0.3 A	8 A

Type	Setting range	Switching differential (Tolerance)	Max. permissible pressure	Dimensioned drawing
Hysteresis not adjustable				**page 21 + 22**
VNS301-351	-250…+100mbar	30 ... 60mbar	3bar	2 + 15
VNS111-351	-1*…+0,1bar	30 ... 70mbar	6bar	
DNS025-351	0,04…0,25bar	20 ... 40mbar	6bar	
DNS06-351	0,1…0,6bar	10 ... 50mbar	6bar	
DNS1-351	0,2…1,6bar	40 ... 80mbar	6bar	
DNS3-351	0,2…2,5bar	60 ... 140mbar	16bar	2 + 18
DNS6-351	0,5…6bar	0,07 ... 0,23bar	16bar	
DNS10-351	1…10bar	0,2 ... 0,4bar	16bar	2 + 17
DNS16-351	3…16bar	0,3 ... 0,7bar	25bar	

* At very high vacuums, close to the theoretical maximum of –1 bar, the switch may not be usable in view of the special conditions of vacuum engineering. However, the pressure switch itself will not be damaged at maximum vacuum.

Calibration
The **DNS** and **VNS** series are calibrated for falling pressure. This means that the adjustable switching pressure on the scale corresponds to the switching point at falling pressure. The reset point is higher by the amount of the switching differential. (See also page 23, 1. Calibration at lower switching point).

DNS/VNS
see page 63

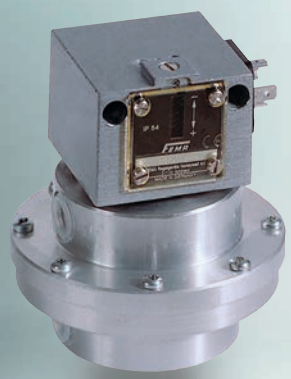

DDCM252

DDCM

Differential pressure switches

FEMA differential pressure monitors are suitable for monitoring and controlling differential pressures, flow monitoring and automatic control of filter systems. A double chamber system with stainless steel bellows or Perbunan diaphragm detects the difference between the two applied pressures.

The desired switching pressure is continuously adjustable within the ranges mentioned in the product summary.
All differential pressure monitors can also be used in the vacuum range.
The switching differential is not adjustable.

SIL 2 according IEC 61508-2

Technical data

Pressure connection
Internal thread G 1/4

Switching device
Robust housing (200) made of seawater resistant die cast aluminium GD Al Si 12.

Protection class
IP 54, in vertical position.

Pressure sensor materials
DDCM014–16:
Pressure bellows of 1.4571
Sensor housing of 1.4305.
DDCM252–6002:
Perbunan diaphragm.
Aluminium sensor housing.

Mounting position
vertically upright.

Ambient temperature at switching device
–25…+70 °C

Max. medium temperature
The maximum medium temperature at the pressure sensor must not exceed the permitted ambient temperature at the switching device. Temperatures may reach 85°C for short periods). Higher medium temperatures are possible provided the above limit values for the switching device are ensured by suitable measures (e.g. siphon).

Mounting
Directly on the pressure line or on a flat surface with two 4 mm Ø screws.
Note the connection of pressurized lines:
P (+) = high pressure
S (–) = low pressure

Switching pressure
Adjustable from outside with screw driver.

Switching differential
Not adjustable

Switching capacity	250 VAC (ohm)	250 VAC (ind)	250 VDC (ohm)	24 VDC (ohm)
Normal	8 A	5 A	0.3 A	8 A

Type	Setting range (differential pressure	Switching differential (Tolerance)	Max.* permissible pressure	Materials in contact with medium	Dimensioned drawing
Schaltdifferenz nicht einstellbar					**page 21 + 22**
DDCM252*	4…25mbar	0,7 ... 4mbar	0,5bar	Aluminium + Perbunan	1 + 20
DDCM662*	10…60mbar	2 ... 23mbar	1,5bar		
DDCM1602*	20…160mbar	2 ... 20mbar	3bar		
DDCM6002*	100…600mbar	2 ... 40mbar	3bar		
DDCM014	–0,1…0,4bar	50 ... 180mbar	15bar	Stainless steel 1.4305 + 1.4571	1 + 21
DDCM1	0,2…1,6bar	80 ... 180mbar	15bar		
DDCM4*	1…4bar	0,1 ... 0,3bar	25bar		
DDCM6	0,5…6bar	0,1 ... 0,3bar	15bar		
DDCM16	3…16bar	0,2 ... 0,8bar	25bar		

* without graduation (only ± scale) set according to pressure gauge
** also loadable on one side
For more differential pressure monitors, see the HCD and DPS series, page 68 and 69.

For accessories, see VKD… and MAU8…, on pages 144 and 145.

Calibration
The **DDCM** series are calibrated for falling pressure. This means that the adjustable pressure on the scale corresponds to the switching point at falling pressure. The reset point is higher by the amount of the switching differential. (See also page 23, 1. Callibration at lower switching point).

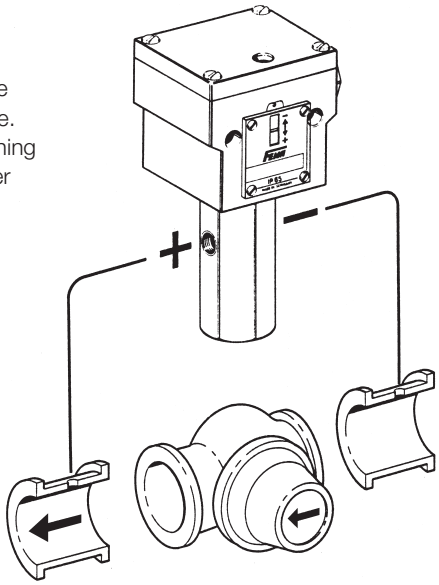

Pump monitoring application example

The differential pressure switch (e.g. DDCM1) monitors differential pressure through the pump. The system shuts down if values fall below an adjustable switching threshold. Pump monitoring does not depend on the static pressure in the system.

Ex DDCM
see page 64

CE

Protection Class:
IP 54

VCM301

VCM/VNM

Negative pressure switches (vacuum switches)

FEMA negative pressure switches detect the pressure difference relative to atmospheric pressure. All data relating to the switching pressure ranges and thus also the scale divisions on the switching devices are to be understood as the difference in pressure between the relevant atmospheric pressure and the set switching pressure. The "zero" reference point on the scale of the unit corresponds to the relevant atmospheric pressure.

SIL 2 according IEC 61508-2

Technical data

Pressure connection
External thread G 1/2 (pressure gauge connection) according to DIN 16 288 and internal thread G 1/4 according to ISO 228 Part 1.

Switching device
Robust housing (200) made of seawater resistant die cast aluminium GD Al Si 12.

Protection class
IP 54, in vertical position.

Pressure sensor materials

VNM111 and VNM301:	Metal bellows: 1.4571 Sensor housing: 1.4104
VCM095, 101 and 301:	Metal bellows of CuZn Sensor housing of CuZn
VCM4156:	Perbunan diaphragm sensor housing: 1.4301

Mounting position
Vertically upright and horizontal.
VCM4156 vertically upright.

Ambient temp. at switching device
–25…+70 °C

Exeption
VCM4156 –15…+60 °C

Max. medium temperature
The maximum medium temperature at the pressure sensor must not exceed the permitted ambient temperature at the switching device. Temperatures may reach 85°C for short periods. Higher medium temperatures are possible provided the above limit values for the switching device are ensured by suitable measures (e.g. siphon).

Mounting
Directly on the pressure line (pressure gauge connection) or on a flat surface with two 4 mm Ø screws.

Switching pressure
Adjustable from outside with screw driver.

Switching differential
Not adjustable with VCM types. Adjustable with VCMV type. For values see Product Summary.

Contact arrangement
Single pole change over switch.

Switching capacity	250 VAC (ohm)	250 VAC (ind)	250 VDC (ohm)	24 VDC (ohm)
Normal	8 A	5 A	0.3 A	8 A

Product summary

Type	Setting range (differential pressure)		Switching differential (Tolerance)		Max. permissible pressure		Dimensioned drawing
Switching differential not adjustable							page 21 + 22
VCM4156	–15…+6mbar		0,7 ... 3	mbar	1	bar	1 + 11
VCM301	–250…+100mbar		10 ... 35	mbar	1,5	bar	1 + 13
VNM301	–250…+100mbar		10 ... 60	mbar	3	bar	1 + 15
VCM101	–1*…+0,1bar		30 ... 60	mbar	3	bar	1 + 14
VCM095	–0,9…+0,5bar		35 ... 65	mbar	3	bar	1 + 14
VNM111	–1*…+0,1bar		30 ... 70	mbar	6	bar	1 + 15
Switching differential adjustable							
VCMV301	–250…+100mbar		30 – 200	mbar	1,5	bar	1 + 13
VCMV101	–1*…+0,1bar		80 – 350	mbar	3	bar	1 + 14
VCMV095	–0,9…+0,5bar		90 – 400	mbar	3	bar	1 + 14
VNMV301	–250...+100mbar		70 – 500	mbar	3	bar	1 + 15
VNM111	–1*…+0,1bar		90 – 650	mbar	6	bar	1 + 15

* At very high vacuums, close to the theoretical maximum of –1 bar, the switch may not be usable in view of the special conditions of vacuum engineering. However, the pressure switch itself will not be damaged at maximum vacuum.

For additional functions refer to page 26 – 28.
For smaller pressure ranges see also HCD and DPS data sheets, page 68 and 69.

Calibration

The **VCM** and **VNM** series are calibrated for falling pressure. This means that the adjustable switching pressure on the scale corresponds to the switching point at falling pressure. The reset point is higher by the amount of the switching differential. (See also page 23, 1. Calibration at lower switching point).

Ex VCM/VNM
see page 65

Tested to PE Directive 2014/68/EU

Rated according to SIL

DWAM1

DWAM, DWAMV, SDBAM

Pressure monitors / pressure limiters

These series are particularly suitable for maximum pressure monitoring in steam and hot water systems. These pressure switch are **"of special construction", with self monitoring pressure sensor,** built in accordance with Pressure Equipment Directive PED 2014/68/EU. They can be used as pressure monitors or a pressure limiters for maximum pressure monitoring (systems in accordance with TRD 604 and DIN EN 12828) and are available with or without switching differential adjustment.

➔ p. 49

Tested to PE Directive 2014/68/EU

Rated according to SIL

DWAM6-576

DBS

Pressure monitors / pressure limiters

In many ways, safetyengineered pressure limiters offer a higher degree of safety compared with standard pressure switches and are therefore especially suitable for chemical process engineering and thermal installations in which safety is an especially critical factor in pressure monitoring. Pressure switches can also be used in Ex-zones (zones 0, 1, 2 and 20, 21, 22) and, in all cases, require an isolating amplifier. The isolating amplifier is also responsible for monitoring lines for shortcircuit and line break and therefore offers an additional safety advantage – even in non-Ex-zones. For Ex-applications, the isolating amplifier must be installed outside the Ex-zone. The lines between the isolating amplifier and the pressure switch are monitored for shortcircuit and line break.

➔ p. 50 – 52

Tested to PE Directive 2014/68/EU

Rated according to SIL

FD16-326

FD

Maximum pressure limiters for liquid gas installations

Pressure limiters of the FD series are constructed in accordance with the special directives for liquid gas engineering. All parts coming into contact with the medium are made from stainless steel 1.4104 and 1.4571. The pressure sensor was designed to be **"self monitoring"**, i. e. should the measuring bellows rupture, the pressure sensor switches off towards the safe side. The pressure sensor thus complies with "of special construction" in the sense of VdTÜV Memorandum "Pressure 100". Pressure limiters are used in intrinsically safe control circuits (Ex-protection Ex-i). By using an isolating amplifier, the control circuit is also monitored for line break and shortcircuit.

➔ p. 53

Tested to ATEX 2014/34/EU
Tested to RL 2009/142/EC

Rated according to SIL

DGM310A

DGM

Pressure monitors for fuel gases

DVGW tested to DIN EN1854:2006. Gas pressure monitors are suitable for all gases in accordance with DVGW work sheet G 260 and for air.

➔ p. 54
➔ p. 67

Tested to PED 2014/68/EU
Tested to ATEX 2014/34/EU

Rated according to SIL

DWR625

DWR

Pressure monitors / limiters

Especially suitable as a pressure monitor or pressure limiter for fuel gases (DVGW work sheet G 260 to DIN EN1854) and liquid fuels (e.g. fuel oil), as well as for steam systems according to TRBS and hot water systems to DIN EN 12828. The DWR is used to monitor maximum and minimum pressures. These pressure switches are **"of special construction" and have been tested with 2 million operating cycles.**

➔ p. 55 – 56
➔ p. 66

DVGW = Deutscher Verein des Gas- und Wasserfaches e.V.
German Technical and Scientific Association for Gas and Water

Pressure switches "of special construction"

Definitions and information

Pressure monitoring and pressure limiting in

- **Steam boilers**
- **District heating systems**
- **Oil pipelines**
- **Liquid gas installations etc.**
- **Hot water heating systems**
- **Gas installations**
- **Firing systems**

is extremely important with regard to safety.

Component testing

Pressure monitoring devices for safety-critical applications must work reliably and be tested according to the relevant directives in each case. **The reliability of pressure monitors and pressure limiters must be certified by a component test** which is performed by the testing agencies responsible in each case (e.g. TÜV and DVGW). The following section deals with the FEMA product range for safetycritical pressure monitoring in thermal and process engineering systems.

Special construction

The term "of special construction" originates from the **VdTÜV Memorandum "Pressure 100", issue 07.2006,** which defines the requirements for **pressure monitors and pressure limiters for steam boilers and hot water systems**. Originally used only for pressure monitoring in the area of steam and hot water, the "special construction" characteristic is increasingly used as a quality and safety argument for other applications as well. The following section describes the requirements for pressure limiters "of special construction". Recommendations for the correct selection of pressure limiters are given by reference to safety analyses.

Definitions of the VdTÜV Memorandum "Pressure 100":

Pressure monitors (DW)
Pressure monitors are devices which switch off the heating system on exceeding and / or falling below a predefined pressure limit and release the heating system again only after a change in pressure.

Pressure limiters (DB)
Pressure limiters are devices which switch off the heating system on exceeding and / or falling below a predefined pressure limit and lock it to prevent automatic restarting.

Pressure limiters "of special construction" (SDB)
Pressure limiters "of special construction" perform the same tasks as pressure limiters. In addition they must satisfy the extended safety requirements of section 3.4 (of "Pressure 100").

Safe condition

According to DIN VDE 0660, Part 209, the safe condition of the system is reached if a cut-off command is present at the output contact which means that in the safe condition, the microswitch in the pressure limiter is actuated (opened) and the control circuit is interrupted. Series connected switching devices must react in the same way. The operating mode of the safety pressure limitation thus corresponds to the **closed circuit principle**.

Additional requirements for pressure limiters "of special construction"

Section 3.4 of VdTÜV Memorandum "Pressure 100":
Pressure limiters "of special construction" **must, in the event of a breakage in the mechanical part of the measuring element, lead to cut-off and interlock of the heating**. This requirement is also fulfilled if the mechanical part of the measuring element is calculated for vibrating stress **or has withstood a test with 2 million operating cycles and the pressurized parts of the measuring element are made of corrosion-resistant materials**.
(Abbreviated except from VdTÜV Memorandum "Pressure 100").

Therefore there are two possible ways of meeting the requirements for pressure limiters "of special construction":
a) By a self monitoring pressure sensor which is designed so that a breakage in the mechanical part of the measuring element leads to cut-off to the safe side (see Fig. 1)
b) By certification of endurance testing with 2 million operating cycles during the component test (see Fig. 2)

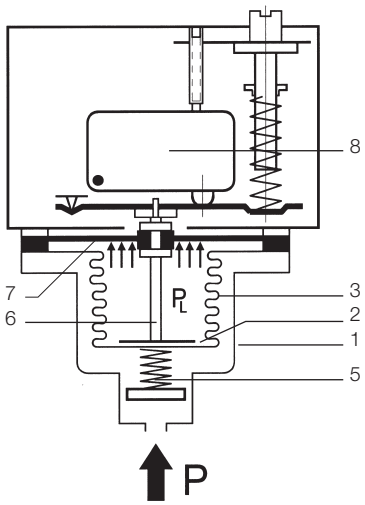

Fig. 1
Self monitoring maximum pressure limiter with safety diaphragm DWAM…, DWAMV…, SDBAM…

a) Self monitoring pressure sensor with safety diaphragm (for maximum pressure monitoring only)
Fig. 1 is a crosssectional diagram of a pressure sensor which fulfils the "special construction" requirements. The measuring chamber is bordered by the housing (1), base (2) and measuring bellows (3). All parts are made of stainless steel and are welded together without filler metals. When the pressure rises the measuring bellows (3) moves upwards, supported by the back pressure spring (5). The setpoint spring installed in the switching device acts as a counter force. A transfer bolt (6) which transfers the pressuredependent movements of the measuring bellows (3) to the switching device located above is placed on the inside of the base. A plastic diaphragm (7), which is not in contact with the medium and in normal operation follows the movements of the measuring bellows but itself has no influence on the position of the bellows, is clamped in the upper part of the transfer bolt. On breakage of the measuring bellows (3), the medium can escape into the interior of the bellows. The medium pressure is now on the underside of the diaphragm (PL). An additional force is generated because of the far larger effective area of the diaphragm compared with the bellows, and this pushes the transfer bolt (6) upwards. This results in cut-off to the safe side. The cut-off condition thus achieved is normally interlocked electrically or mechanically, so that the system also remains cut off when the pressure drops again. The plastic diaphragm (7) is not a pressure-bearing part; it has no function in normal operation and is effective only if a leakage occurs to the measuring bellows. Safety diaphragms of the described design are permissible up to 32 bar. This should be sufficient for most applications.

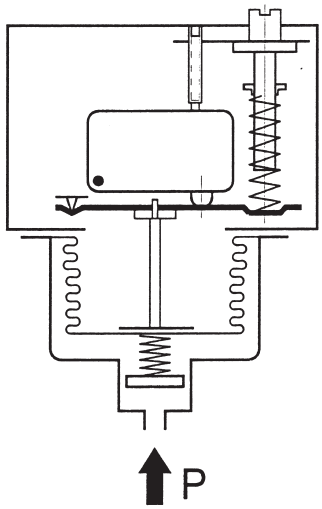

Fig. 2
Pressure limiter without safety diaphragm (not self monitoring for maximum pressure) DWR…

b) Pressure sensors with certification of 2 million operating cycles (DWR series)
In this design it is assumed that the pressure sensors which have withstood dynamic loading of 2 million operating cycles during component testing can be considered as reliable elements. They do not have an additional safety device in the sensor. Although the units are produced and tested with very great care, maximum pressure limiters without additional safety device can lead to dangerous conditions if errors which cannot be detected in the tests occur due to secondary effects. These may be caused by hole corrosion due to deposited metal particles on the (usually very thinwalled) bellows of the pressure sensor, material defects in the pressure bellows or a broken weld seam. Despite careful production and testing, a residual risk remains in the case of maximum pressure monitoring. It is ultimately up to the user and operator of the systems themselves to decide on the degree of safety to which pressure vessels should be monitored.

Pressure sensors without safety diaphragm are self monitoring when used in minimum pressure monitoring applications.

Safety analysis for maximum pressure monitoring

Observing the direction of action

The preceding description and safety considerations relate to the monitoring of maximum pressure. The safe side here means: The energy supply is cut off (e.g. burner is turned off) to avoid a further pressure rise. Minimum pressure monitoring requires an entirely different approach. The safe side here means: Preventing the pressure from falling further (for example: hotwater systems with external pressure retention or monitoring of water level in heating systems). Based on a safety analysis, a pressure limiter without safety diaphragm is clearly the best option. In the event of leakage in the sensor, "low pressure" is signalled and the system switches over to the safe side. A pressure sensor without safety diaphragm is therefore "of special construction" within the meaning of Memorandum "Pressure 100", if it is used as a minimum pressure limiter. On the other hand, it is clear from the above that pressure sensors with safety diaphragms, which offer considerable advantages in maximum pressure monitoring, should never be used for minimum pressure monitoring. Incorrect use can create a dangerous condition. It is therefore essential for users and planners to observe the direction of action when selecting pressure limiters.

In summary it may be said:
Pressure limiters "of special construction" with safety diaphragms (self-monitoring pressure sensors) offer the highest degree of safety in maximum pressure monitoring. Such devices must not however be used for minimum pressure monitoring. Pressure limiters "of special construction" with certification of 2 million operating cycles are self monitoring in the case of minimum pressure monitoring, even without a safety diaphragm. In the case of maximum pressure monitoring, however, a residual risk remains.

Safety analysis for maximum pressure monitoring

If one considers the switch positions in the possible operating conditions, the difference compared with pressure sensors "of special construction" becomes clear. The left column shows normal operation in which the switch connects terminals 3 and 1. The cut-off condition when pressure is too high is shown in column 2. The control circuit is interrupted via terminals 3 and 1.
The difference in safety terms is clear from column 3, which shows the switch position in the event of a leak in the pressure sensor. With a safety-engineered sensor the control circuit is interrupted, whereas in the case of a sensor without a safety diaphragm the control circuit remains closed, and thus a "dangerous condition" can arise.

Devices with safety diaphragm (DWAM, DWAMV, SDBAM)
In pressure limiters "of special construction" which are equipped with **safety sensors**, different operating conditions occur in the following switch positions:

1	2	3
Normal operation	Limit exceeded	Leakage in pressure sensor
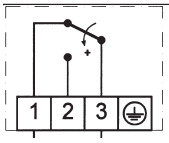	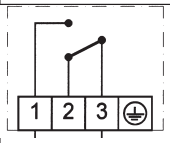	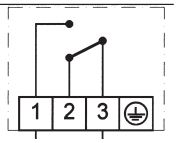
Control circuit closed	Control circuit interrupted	Control circuit interrupted

Device without safety diaphragm
"Special construction" must also be proven by an **endurance test with 2 million operating cycles**. In the case of breakage/leakage (e.g. material defect, fault in weld seams, hole corrosion), the system **does not cut off to the safe side (no self-monitoring).**

In the different operating conditions the following switch positions occur **in the case of maximum pressure monitoring**: In the event of leakage in the pressure sensor, the pressure monitors / limiters according to b) are not safe. A "dangerous condition" can arise.

Normal operation	Limit exceeded	Leakage in pressure sensor
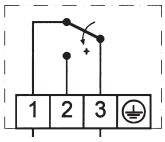	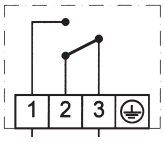	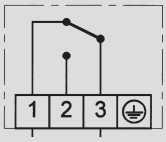
Control circuit closed	Control circuit interrupted	Control circuit Dangerous condition!

Further observations and summary

Minimum pressure

All **minimum pressure monitors and minimum pressure limiters are self monitoring** within the meaning of "Pressure 100" (with or without safety diaphragm).

Pressure limiters must interlock the cut-off state
Memorandum "Pressure 100" specifies that pressure limiters must cut off and interlock against automatic restarting. For this purpose, pressure limiters are offered with integrated mechanical interlock (reclosing lockout). The direction of action is also important in the selection of the interlock. Depending on the direction of action it is necessary to determine whether the interlock should operate on rising (maximum pressure monitoring) or falling (minimum pressure monitoring) pressure.

External interlock is also possible
A pressure monitor can become a pressure limiter, if an electrical interlock is connected in series. The figures on page 22 show suggested interlock circuits for maximum pressure and minimum pressure monitoring. The direction of action must be observed when deciding the circuit. For the combination of pressure monitor with external interlock to be considered as a limiter "of special construction", the pressure monitor itself must satisfy the "special construction" requirements.

Other considerations

"Special construction" — not just for steam and hot water systems
According to current standards, pressure limiters "of special construction" are mandatory for steam boilers according to TRBS and for heating systems according to DIN EN12828. It is clearly advantageous to transfer the positive experience from pressure monitoring of steam boilers to other applications. In the interest of greater safety it is desirable to incorporate the requirements for pressure limiters "of special construction" used in safetycritical monitoring applications into other standards as well. This applies particularly to applications in the field of gas, which are covered by DIN EN1854, and liquid fuels, covered by DIN EN764-7.

For even greater safety:
Positive opening contacts
In maximum pressure monitoring, safety can be further increased through additional measures. The microswitches, normally equipped with a spring contact, can be fitted with **positive opening contact (to protect against contact sticking)**.

Line break and short-circuit monitoring
The power supply to the pressure limiter is monitored for short-circuit and interruption by an external isolating amplifier. In the case of faults in the power supply, the system cuts off to the safe side. Ex-d and Ex-i versions, where applicable combined with sensors "of special construction", open up a wide range of possibilities in the field of Ex-applications for **process engineering systems and gas engineering**. See DBS-series.

Summary

It is apparent that safety can be improved significantly and numerous causes for the occurrence of dangerous conditions can be eliminated through the appropriate use of technical measures. However, it is also apparent that a residual risk remains. Careful planning and conscientious maintenance and testing of existing systems are absolutely essential for reliable pressure monitoring on pipelines and pressure vessels.

Standards – Directives – Component tests

VdTÜV Pressure 100	**Steam and hot water** Pressure monitors and pressure limiters for steam and hot water in systems to DIN EN12828 and TRBS. Series DWAM, SDBAM and DWR.
DVGW DIN EN1854	**Fuel gases** CE Pressure monitors and limiters for fuel gases in accordance with DVGW work sheet G 260. Series DGM and DWR.
TÜV DIN EN764-7	**Liquid fuels** Pressure monitors and pressure limiters for liquid fuels (heating oil) Series DWR.
TÜV, Pressure 100	**Safety-engineered pressure limiters** For safety critical pressure monitoring in liquid gas systems, chemical and process engineering systems.
PED 2014/68/EU	**Pressure Equipment Directive 2014/68/EU** Pressure monitors and limiters to DIN EN12952-11 and DIN EN12953-9
ATEX 2014/34/EU	**Ex-versions** For Ex-areas Zones 1 and 2, as well as 21 and 22 all pressure switches can be supplied in pressure proof encapsulated design. All intrinsically safe devices are for the Ex-Zones 0, 1, 2, 20, 21 and 22.
IECEx	For intrinsically safe control circuits (Ex protection class Ex-i), pressure switches with gold plated silver contact, and the blue terminals and cable entries customary in Ex-i areas can be supplied. In addition to the pressure switch, an isolating amplifier which transfers the control commands of the pressure switch from an intrinsically safe control circuit (Ex-i) to a non intrinsically safe active circuit is required

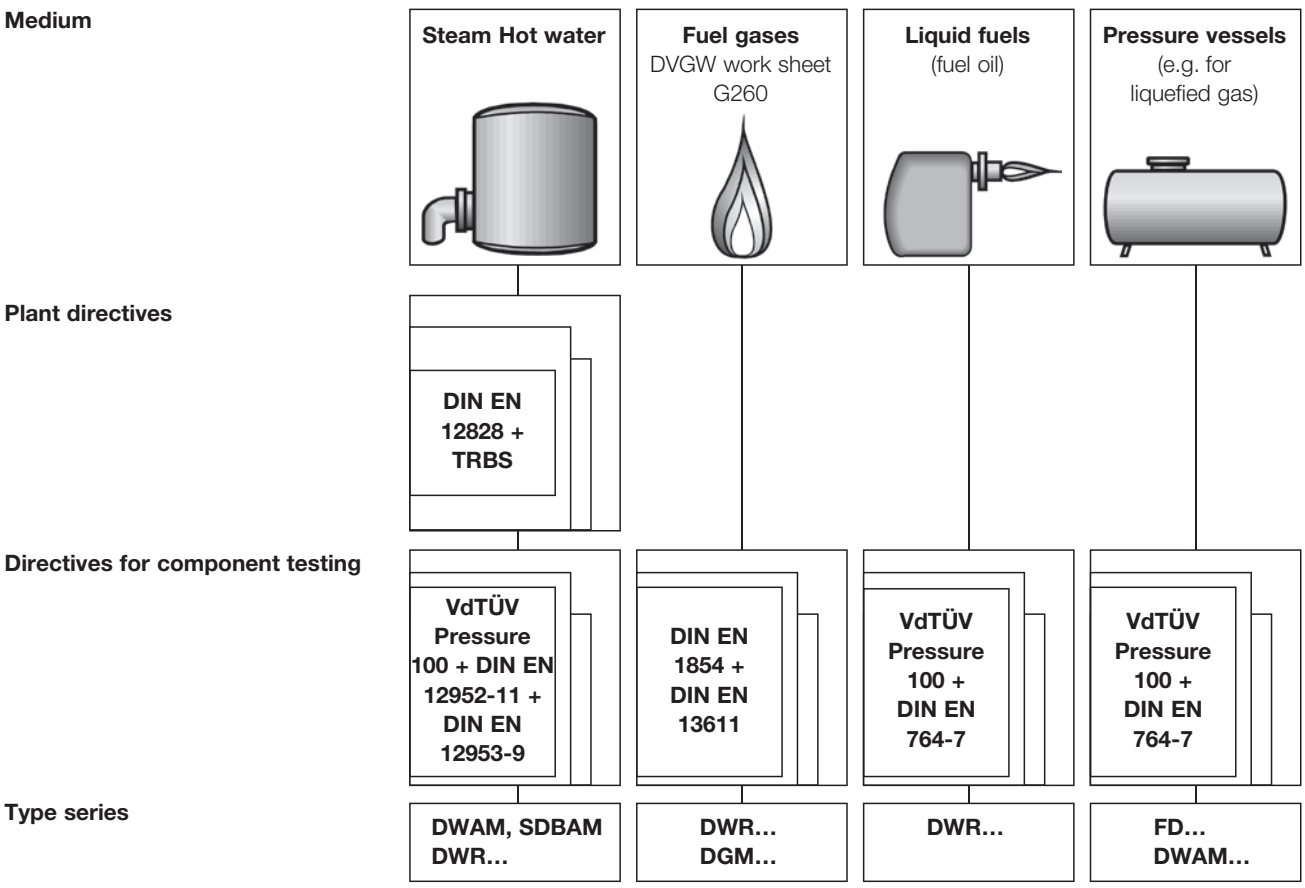

Selection according to function and application

Pressure monitor

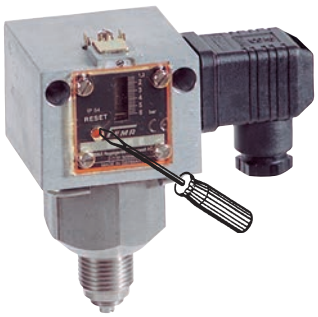

Pressure limiter with internal interlock

Application / Function	**Steam and hot water** systems to TRBS and DIN EN12828	**Fuel gases** to DVGW-Work sheet G 260	**Heating oil** and other **liquid fuels**	**Other media** (check compatibility with the materials used)
Pressure monitoring **Pressure regulation** (e.g. burner or pump control)	DWAM… DWAMV… DWR… DWR…-203	DGM… DWR… DWR…-203	DWR… DWR…-203	DWAM… DWAMV… DWR… DWR…-203
Maximum pressure limitation with internal interlock	SDBAM… DWR…-205	DGM…-205 DWR…-205	DWR…-205	SDBAM… DWR…-205
with external interlock	DWAM… DWR…	DGM… DWR…	DWR…	DWAM… DWR…
Minimum pressure limitation with internal interlock	DWR…-206	DGM…-206 DWR…-206	DWR…-206	DWR…-206
with external interlock	DWR… DWR…	DGM… DWR…	DWR…	

…The code number for the pressure range must be inserted here (see data sheets). A final number of 2… (e.g. DWR…-205) means a plug connector according to DIN EN175301.

DWR series
The DWR series **covers all the applications mentioned above**.

DWAM-, DWAMV-, SDBAM-series (self-monitoring sensor)
DWAM, DWAMV and SDBAM are **only suitable for maximum pressure monitoring**. They offer **additional safety** due to the **safety diaphragm (selfmonitoring sensor)**. They are TÜV-tested for steam and hot water, but due to the self-monitoring sensor can also be recommended for other, **particularly safety critical applications** (e.g. in process engineering).

Sensors of the DWR series are self-monitoring when used in minimum pressure monitoring applications.

Equipment of a boiler with pressure monitor and pressure limiter

Pressure monitor for burner control: **DWAM… or DWR…** (without adjustable switching differential)
or
(better, because switching differential adjustable) **DWAMV… or DWR…–203**

Pressure limiter for safety monitoring: **SDBAM… or DWR…–205** (with internal interlock, unlocking button on the pressure limiter)
or
DWAM… or DWR… (with external interlock in the control cabinet)
Suggested connection for the external interlock, see page 24.

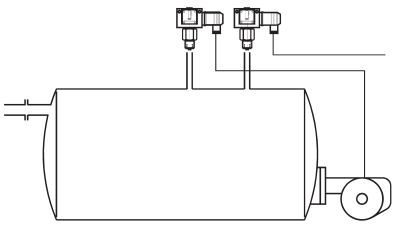

DWAM1

DWAM, DWAMV, SDBAM

Pressure monitors / pressure limiters

These series are particularly suitable for maximum pressure monitoring in steam and hot-water systems. The pressure switch is "of special construction", with a self monitoring pressure sensor, built in accordance with Pressure Equipment Directive PED 2014/68/EU.

It can be used as a pressure monitor or a pressure limiter for maximum pressure monitoring (systems in accordance with TRBS DIN EN12828) systems in accordance with DIN EN12952-11 and DIN EN12953-9 and is available with or without adjustment.

SIL 2 according IEC 61508-2

Technical data

Pressure connection
External thread G 1/2 (pressure gauge connection) to DIN 16 288 and internal thread G 1/4 to ISO 228 Part 1.

Switching device
Rugged housing (200) made of seawater resistant die cast aluminium.

Materials
Pressure bellows: Material no. 1.4571
Sensor housing: Material no. 1.4104
Switch housing: GD Al Si 12 according to DIN 1725

Mounting position
Vertically upright and horizontal.

Ambient temperature at switching device –20 to +70°C.

Medium temperature –20 to +70°C.
The maximum medium temperature at the pressure sensor must not exceed the permitted ambient temperature at the switching device. Temperatures may reach 85°C for short periods. Higher medium temperatures are possible provided the upper limit at the switching device is ensured by suitable measures (e.g. siphon).

Mounting
Directly on the pressure line (pressure gauge connection) or on a flat surface with two 4 mm Ø screws.

Calibration for maximum pressure switch
The pressure monitors and safety pressure limiting devices are calibrated so that, **under rising pressure**, switching takes place at the defined switching pressure. The reset point under falling pressure is lower by the amount of the switching differential, or, in the case of pressure limiting devices, by the fall in pressure specified in the table. The scale value corresponds to the upper switching point.

Switching differential
See Product Summary.

Contact arrangement
Single pole change over switch.

Switching capacity	250 VAC (ohm)	(ind)	250 VDC (ohm)	24 VDC (ohm)
Normal	8 A	5 A	0.3 A	8 A

Sealing P2
Generally available for SDBAM limiters.

Bursting pressure
For all types ≥ 100 bar.
Verified by TÜV test.

Component tested for	**Steam** Systems according to TRD 604 **Hot water** Systems according to DIN EN12828
Testing basis	VdTÜV Memorandum "Pressure 100"
Function	Pressure monitor / Pressure limiter
Directing of action	**For maximum pressure monitoring only**
Sensor	**"Of special construction"** (self monitoring sensor with safety diaphragm)

Product Summary Maximum pressure monitoring (↑)
(for other pressure ranges see DWR series)

Type	Setting range	Switching differential (Tolerance)	Max. permissible pressure	Dimensioned drawing
Pressure monitors without differential adjustment for max. pressure monitoring*				**page 21 + 22**
DWAM06	0,1…0,6 bar	20 ... 50 mbar	5 bar	1 + 15
DWAM1	0,2…1,6 bar	20 ... 80 mbar	5 bar	
DWAM6	1,2…6 bar	0,1 ... 0,26 bar	10 bar	
DWAM625	1,2…6 bar	0,13 ... 0,31 bar	20 bar	1 + 19
DWAM16	3…16 bar	0,2 ... 0,6 bar	20 bar	
DWAM32	6…32 bar	0,6 ... 1,6 bar	45 bar	
Pressure monitors with differential adjustment for max. pressure monitoring				
DWAMV1	0,2…1,6 bar	0,12…0,6 bar	5 bar	1 + 15
DWAMV6	1,2…6 bar	0,4…1,5 bar	10 bar	
DWAMV16	3…16 bar	0,8…2,5 bar	20 bar	1 + 19
DWAMV32	6…32 bar	2,5…6,0 bar	45 bar	

Pressure limiters for maximum pressure monitoring (with internal interlock)

		Pressure change for unlocking		
SDBAM1	0,2…1,6 bar	0,12 bar	5 bar	1 + 15
SDBAM2,5	0,4…2,5 bar	0,18 bar	5 bar	
SDBAM6	1,2…6 bar	0,42 bar	10 bar	
SDBAM625	1,2…6 bar	0,6 bar	20 bar	1 + 19
SDBAM16	3…16 bar	1,1 bar	20 bar	
SDBAM32	6…32 bar	3,0 bar	45 bar	

* If a downstream external interlock is added, DWAM... pressure monitors can also be used as pressure limiters (see page 24).
· Sealing device P2 is included for SDBAM limiters and can also be retrofitted to pressure monitors on request. See sealing P2.
· DWAM... also available in Ex-i equipment. See DBS series.

Minimum pressure controls
– Minimum pressure monitor: DWR… page 55
– Minimum pressure limiter: DWR…-206 page 56

FEMA by Honeywell

CE TÜV tested DIN Geprüft

Protection Class: IP 54

DWAM6-576

DBS

Pressure monitors / pressure limiters

In many aspects, safety engineered pressure limiters offer a higher degree of safety compared with normal pressure switches and are therefore especially suitable for chemical process engineering and thermal installations in which safety is an especially critical factor in pressure monitoring. Pressure switches can also be used in Ex- zones (zone 0, 1, 2 and 20, 21, 22) and, in all cases, require an isolating amplifier.
The isolating amplifier is also responsible for monitoring lines for short circuit and line break and therefore offers an additional safety advantage – even in non Ex-zones. For Ex-applications, the isolating amplifier must be installed outside the Ex-zone. The lines between the isolating amplifier and the pressure switch are monitored for short circuit and line break.

SIL 2 according IEC 61508-2

Technical data

Greater safety
· in process engineering and chemical installations,
· in gas and liquid gas installations

Basic features:
– "Of special construction" according to VdTÜV Memorandum "Pressure 100"
– Line break and short circuit monitoring- between pressure switch and isolating amplifier
– Suitable for Ex-areas (zone 0, 1 & 2 or 20, 21 & 22) (explosion protection Ex-i)
– Protection class IP 65
– Plastic-coated housing (chemical version)

Options:
– Limiter with internal interlock

Type specific features:
– Self-monitoring sensors
– Positive opening microswitches
– Gold plated contacts
– TÜV, DVGW component tests

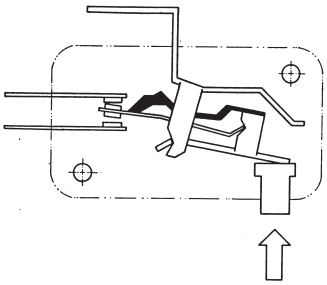

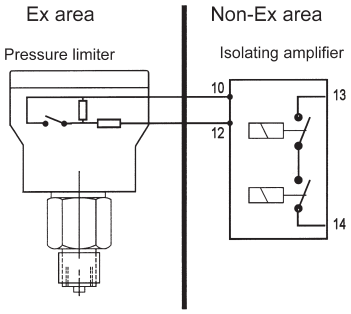

Safety requirements for pressure limiters

Pressure limiters "of special construction" (DBS) must fulfil additional safety requirements, i.e. breakage or leakage in the mechanical part of the sensor must lead to shutdown to the safe side. The pressure limiter must respond as if the system pressure had already exceeded the maximum limit. The control circuit for the pressure limiter must also be considered from the point of view of safety, as short circuits in the supply lines or other faults in the control current circuit can lead to dangerous conditions.

Switching element with positive opening operation and gold plated contacts

The microswitch is equipped with positive opening operation. Rather than transmitting the plunger force via a spring, which is the usual method with most microswitches, this newly developed microswitch has an additional lever which transmits the movements of the pressure bellows positively to the contact lever. If the spring breaks, the contact lever is moved directly.

Line break and short circuit monitoring in the control circuit

The resistor connected in series with the switching contact limits the current to a defined value with the switch closed. In the event of short circuit in the area between the isolating amplifier and the series resistor, the current rises above the predetermined limit value, the relay of the isolating amplifier drops out, the output current circuit is interrupted and thus the safe condition is achieved. In the event of a line break, the current flow is interrupted, the relay drops to the safe side and interrupts the output current circuit (safety sequence). Furthermore, the isolating amplifier is designed so that, if faults occur in the electronics (conductor interruption, component defect etc.) and in the resulting situations, the safe shutdown condition is assured. These characteristics of the safety engineered isolating amplifier, including line break and short circuit monitoring, satisfy the requirements of DIN/VDE 0660, Part 209.

Connection diagram

For pressure monitoring in Ex-areas, the isolating amplifier must be installed outside the Ex-zone. The pressure limiter has an intrinsically safe control current circuit (Ex-i). This arrangement is suitable for zones 0, 1 and 2, 20, 21 and 22.

Safety engineered maximum pressure monitors

Technical data

Pressure connection
External thread G 1/2 (pressure gauge connection) according to DIN 16 288 and interval thread G 1/4 to ISO 228 Part 1.

Switch housing 500
Die cast aluminium GD Al Si 12. Aluminium housing coated with resistant plastic.

Mounting position
Vertically upright.

Protection class IP 65.

Ex protective category
Ex-i (only when used in conjunction with suitable isolating amplifier).

Component testing See table on page 52.

Pressure sensor materials
Housing: 1.4104
Pressure bellows: 1.4571
All parts fully welded.

Ambient temperature
DWAM: –20°C to +60°C, DWR: –25°C to +60°C. At ambient temperatures at or below 0°C, ensure that condensation cannot occur in the sensor or in the switching device.

Max. temperature of medium at sensor
+ 60°C.

Outdoor installations
Protect the device against direct atmospheric influences. Provide a protective cover.

Max. working pressure
See Product Summary

Switching pressure setting
Adjustable with the setting spindle after removing the terminal box.

Mounting
With suitable weld on connections and union nuts or with pressure gauge screw union G 1/2.

Power supply circuit
U_i 14 V DC
R_i 1500 Ohm
C_i 1 nF
L_i 100 µH

Connection scheme

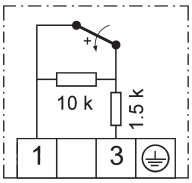

…576

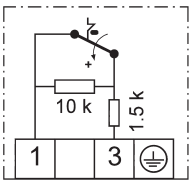

…577

Maximum pressure monitors

Sensor "of special construction", self monitoring via safety diaphragm, type tested according to VdTÜV Memorandum "Pressure 100". **SIL2 according IEC 61508-2**

Type	Setting range	Switching differential (Tolerance)	Max. permissible pressure	Dimensioned drawing
				page 21 + 22
DWAM06-576	0,1…0,6 bar	20 ... 50 mbar	5 bar	
DWAM1-576	0,2…1,6 bar	20 ... 80 mbar	5 bar	
DWAM2,5-576	0,4…2,5 bar	40 ... 100 mbar	5 bar	3 +
DWAM6-576	1,2…6 bar	0,1 ... 0,26 bar	10 bar	15
DWAM625-576	1,2…6 bar	0,13 ... 0,31 bar	20 bar	
DWAM16-576	3…16 bar	0,2 ... 0,6 bar	20 bar	3 +
DWAM32	6…32 bar	0,6 ... 1,6 bar	45 bar	19

Versions:
ZF577: Maximum pressure limiter (with internal interlock)
Microswitch not positive opening, contacts: silver alloy other equipment like DWAM…576.

Maximum pressure monitors

Sensor "of special construction" made from stainless steel. (Component testing with 2 million operating cycles).
Component tests: VdTÜV Memorandum "Pressure 100", DIN EN1854 (fuel gases), DIN EN764-7, systems in accordance to DIN EN12952-11 and DIN EN12953-9.
SIL 2 according ICE 61508-2

Type	Setting range	Switching differential (Tolerance)	Max. permissible pressure	Dimensioned drawing
				page 21 + 22
DWR06-576	0,1…0,6 bar	35 ... 73 mbar	6 bar	3 +
DWR1-576	0,2…1,6 bar	53 ... 111 mbar	6 bar	15
DWR3-576	0,2…2,5 bar	107 ... 218 mbar	16 bar	3 +
DWR6-576	0,5…6 bar	0,08 ... 0,30 bar	16 bar	18
DWR625-576	0,5…6 bar	0,22 ... 0,45 bar	25 bar	3 +
DWR16-576	3…16 bar	0,40 ... 0,81 bar	25 bar	17
DWR25-576	4…25 bar	0,80 ... 1,67 bar	63 bar	3 +
DWR40-576	8…40 bar	1,32 ... 2,75 bar	63 bar	16

Versions:
ZF577: Maximum pressure limiter (with internal interlock)
Microswitch not positive opening, contacts: silver alloy other equipment like DWR… 576

Calibration

Devices of the **DWR-576** and **DWAM-576** series are calibrated for rising pressure. This means that the adjustable switching pressure on the scale corresponds to the switching point at rising pressure. The reset point is lower by the amount of the switching differential. (See also page 23, 2. Calibration at upper switching point).

Safety engineered minimum pressure monitors
Sensor "of special construction" made of stainless steel. (self-monitoring and component testing with 2 million operating cycles). Component tests: VdTÜV Memorandum "Pressure 100", DIN EN3398 (fuel gases) DIN EN764-7, systems in accordance to DIN EN12952-11 and DIN EN12953-9
SIL2 according IEC 61508-2

Technical data
see page 28

Connection scheme

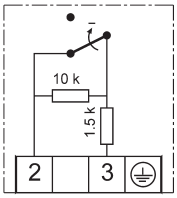

…574

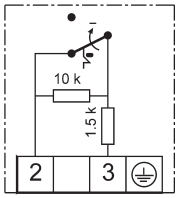

…575

Type	Setting range	Switching differential (Tolerance)	Max. permissible pressure	Dimen-sioned drawing
				page 21 + 22
DWR06-574	0,1…0,6 bar	35 ... 73 mbar	6 bar	3 +
DWR1-574	0,2…1,6 bar	40 ... 100 mbar	6 bar	15
DWR3-574	0,2…2,5 bar	107 ... 218 mbar	16 bar	3 +
DWR6-574	0,5…6 bar	0,08 ... 0,30 bar	16 bar	18
DWR625-574	0,5…6 bar	0,22 ... 0,45 bar	25 bar	3 +
DWR16-574	3…16 bar	0,2 ... 0,6 bar	25 bar	17
DWR25-574	4…25 bar	0,8 ... 1,67 bar	63 bar	3 + 16

Calibration
The **DWR-574** series is calibrated for falling pressure. This means that the adjustable switching pressure on the scale corresponds to the switching point at falling pressure. The reset point is higher by the amount of the switching differential. (See also page 23, 1. Calibration at lower switching point).

Versions:
ZF575: Minimum pressure limiters (with internal interlock)
Switching contacts: silver alloy
other equipment like DWR… 574

Features of safety engineered pressure monitors and pressure limiters

Devices	Component testing	Features					Options	
	1 = VdTÜV Memorandum "Pressure 100" 2 = DIN EN1854 3 = DIN EN764-7 4 = DIN EN12952-11 / DIN EN12953-9 5 = ATEX / IEXEx	Resistor combination for line break and short circuit monitoring	Ex-i version for intrinsically safe control circuits	Self monitoring pressure sensor	Plastic coated housing Chemical version	Positive opening microswitches	Gold plated contacts	Limiter with internal interlock Chemical version
Maximum pressure monitoring								
FD16-326	1 + 3 + 5	■	■	■		■	■	
FD16-327	1 + 3 + 5	■	■	■				■
DWAM…576	1 + 4 + 5	■	■	■	■	■	■	
DWAM…577	1 + 4 + 5	■	■	■	■			■
DWR…576	1 + 2 + 3 + 4 + 5	■	■		■	■	■	
DWR…577	1 + 2 + 3 + 4 + 5	■	■		■			■
Minimum pressure monitoring								
DWR…574	1 + 2 + 3 + 4 + 5	■	■		■	■	■	
DWR…575	1 + 2 + 3 + 4 + 5	■	■		■			■

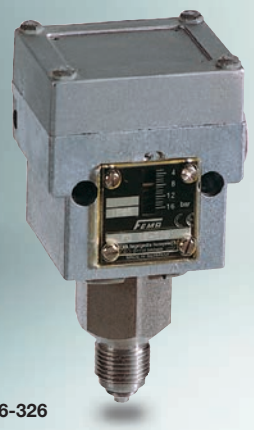

FD16-326

FD

Maximum pressure limiters for liquid gas installations

Pressure limiters of the FD series are constructed in accordance with the special directives for liquid gas engineering. All parts coming into contact with the medium are made of stainless steel 1.4104 and 1.4571. The pressure sensor was designed to be "self-monitoring", i. e. should the measuring bellows rupture, the pressure sensor switches off towards the safe side. The pressure sensor thus complies with "of special construction" in the sense of VdTÜV Memorandum "Pressure 100". Pressure limiters are used in intrinsically safe control circuits (Ex-protection Ex-i). By using an isolating amplifier, the control circuit is also monitored for line break and short circuit.

SIL 2 according IEC 61508-2

Technical data

Pressure connection External thread G 1/2 (pressure gauge connection) according to DIN 16 288 and internal thread G 1/4 to ISO 228 Part 1.

Switch housing 300
Die cast aluminium GD Al Si 12.

Protection class: IP 65

Mounting position: Vertically upright

Explosion protection Ex-i (only when used in conjunction with isolating amplifier).

Pressure sensor materials
Housing: 1.4104, Pressure bellows: 1.4571
All parts fully welded. Perbunan safety diaphragm (not in contact with medium).

Ambient temperature –25°C to +60°C.
At ambient temperatures below 0°C, ensure that condensation cannot occur in the sensor or in the switching device.

Max. medium temperature: +60°C.

Outdoor installations
Protect the device against direct atmospheric influences. Provide a suitable protective cover.

Max. permissible working pressure: 40 bar.

Switching pressure: 3–16 bar. Adjustable with the setting spindle after removing the terminal box.

Calibration
The **FD16-316** and **FD16-327** series are calibrated for rising pressure. This means that the adjustable switching pressure on the scale corresponds to the switching point at rising pressure. The reset point is lower by the amount of the switching differential. (See also page 23, 2. Calibration at upper switching point).

Interlock after cutout
Internal interlock on FD16–327.
Interlock defeat: after pressure reduction of approx. 2.5 bar by pressing the red button (with tool) on the scale side of the pressure switch.

External interlock on FD16–326.
Interlock defeat: After pressure reduction of approx. 0.5 bar. Press unlocking button in control cabinet.

Line break and short circuit monitoring
On types FD16–326 and FD16–327 used in conjunction with isolating amplifier, the control circuit is monitored for short circuit and line break. The resistor combination incorporated into the pressure switch ensures that a defined current flows at all times during normal operation. In the event of short circuit or line break, the current level changes and the relay drops out to the safe side.

Product Summary

Type	Setting range	Switching differential (Tolerance)	Interlock pressure	Dimensioned drawing
				page 21+22
FD16–326	3 -16 bar	0,3 ... 1,0 bar	Extern	3 + 19
FD16–327	3 -16 bar	1,5 ... 3,0 bar	Intern	3 + 19

Defeat:
E = External, i.e. in control cabinet via relay with latching
I = Internal, i.e. locally at pressure limiter

For the power supply circuit
U_i 14 V DC
R_i 1500 Ohm
C_i 1 nF
L_i 100 µH

Internal circuit

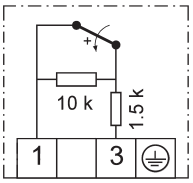

FD 16-326
Single pole change over switch with resistor combination for line break and short circuit monitoring.
(External interlock in control cabinet necessary).

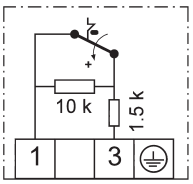

FD 16-327
Single pole changeover switch with mechanical switching state interlock on reaching maximum pressure and with resistor combination for line break and short circuit monitoring.

Please note: FD pressure limiters must never be connected directly to mains voltage. They must only be used in conjunction with isolating amplifier.

DGM310A

DGM

Pressure monitors for fuel gases

DVGW tested to DIN EN1854
Gas pressure monitors are suitable for all gases in accordance with DVGW work sheet G260 and for air.

SIL 2 according IEC 61508-2

Technical data

Pressure connection
External thread G 1/2 to DIN 16 288 and internal thread G 1/4 to ISO 228 Part 1 (permissible up to 4 bar).

Switching device
Seawater resistant die cast aluminium GD Al Si 12.

Protection class
IP 54 for vertical installation position.

Pressure sensor materials
See Product Summary

Ambient temperature –25 to +60°C.
At ambient temperatures below 0°C, ensure that condensation cannot occur in the sensor or in the switching device.

Maximum working pressure
See Product Summary

Mounting
Either directly on the pipe or with two 4 mm ø screws on the wall surface.

Mounting position
Vertically upright and horizontal.

Setting
Continuously adjustable via the setting spindle with a screw driver. The set switching pressure is visible in the scale window.

Sealing P2
On request (can be fitted later).

Switching differentials
Largely independent of the set switching pressure. Not adjustable. For values see Product Summary.

Switching capacity	250 VAC (ohm)	(ind)	250 VDC (ohm)	24 VDC (ohm)
Normal	8 A	5 A	0.3 A	8 A

Pressure measuring connection
Care must be taken to ensure that a pressure measuring connection is available in a suitable place on the gas appliance.

Component tested for	Fuel gases according to DVGW work sheet G 260
Testing basis	DIN EN1854
Function	Pressure monitor
Direction of action	**For maximum and minimum pressure monitoring**

Product Summary

Type	Setting range	Switching differential (Tolerance)	Max. working pressure	Materials in contact with medium	Dimensioned drawing
					p. 21+22
DGM306A	15…60 mbar	2 ... 10 mbar	0,8 bar	CU + Ms	
DGM310A	20…100 mbar	4 ... 10 mbar	0,8 bar	CU + Ms	1 + 13
DGM325A	40…250 mbar	7 ... 14 mbar	0,8 bar	CU + Ms	
DGM06A	100…600 mbar	10 ... 35 mbar	2 bar	CU + Ms	1 + 14
DGM1A	0,2…1,6 bar	10 ... 55 mbar	3 bar	CU + Ms	
DGM506	15…60 mbar	7 ... 11 mbar	5 bar	1.4104	
DGM516	40…160 mbar	10 ... 18 mbar	5 bar	1.4104	1 + 12
DGM525	100…250 mbar	12 ... 20 mbar	5 bar	1.4104	

Calibration

The **DGM** series is calibrated for rising pressure. This means that the adjustable switching pressure on the scale corresponds to the switching point at rising pressure. The reset point is lower by the amount of the switching differential. (See also page 23, 2. Calibration at upper switching point).

For other pressure ranges see type series DWR, page 55.

Ex-i version (intrinsically safe)

As above, but with additional function ZF513 (Ex-i).
Example for ordering: **DGM516-513**

Ex-DGM see page 67

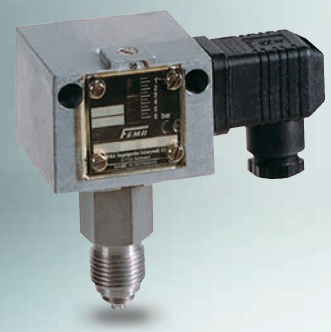

DWR625

DWR

Pressure monitors

Especially suitable as a pressure monitor or pressure limiter for fuel gases (DVGW Worksheet G 260) and liquid fuels (e.g. fuel oil), as well as for steam systems according to TRD 604 and hot water systems to DIN EN12828, systems in accordance to DIN EN12952-11 and DIN EN12953-9. The DWR is used to monitor maximum and minimum pressures. This pressure switch is "of special construction" and has been tested with 2 million operating cycles. TÜV and DVGW tests exists.

SIL 2 according IEC 61508-2

Technical data

Pressure connection
External thread G 1/2 (pressure gauge connection) to DIN 16 288 and internal thread G 1/4 to ISO 228 Part 1 (for gas applications internal thread permissible only up to 4 bar).

Switching device
Rugged housing (200) made of seawater resistant die cast aluminium.

Materials
Pressure bellows: Material no. 1.4571
Sensor housing: Material no. 1.4104
Switch housing: GD Al Si 12 (DIN 1725)

Mounting position
Vertically upright and horizontal.

Ambient temperature at switching device
–25 to +70°C,
Medium temperature –25 to +70°C. The maximum medium temperature at the pressure sensor must not exceed the permitted ambient temperature at the switching device. Temperatures may reach 85°C for short periods. Higher medium temperatures are possible provided the above limit values for the switching device are ensured by suitable measures (e.g. siphon).

Mounting
Directly on the pressure line (pressure gauge connection) or on a flat surface with two 4 mm Ø screws.

Calibration
The DWR series is calibrated for rising pressure. This means that the adjustable switching pressure on the scale corresponds to the switching point at rising pressure. The reset point is lower by the amount of the switching differential. (See also page 23, 2. Calibration at upper switching point). In version ...-203 the switching differential is adjustable. The basic calibration is maintained.

Bursting pressure
For all types ≥ 100 bar, verified by TÜV test.

Switching differential For values see Product Summary.

Contact arrangement Single pole change over switch.

Switching capacity	250 VAC (ohm)	(ind)	250 VDC (ohm)	24 VDC (ohm)
Normal	8 A	5 A	0.3 A	8 A

Protection class IP 54 according to DIN 40 050

Component tested for	**Steam** Systems according to TRBS **Hot water** Systems according to DIN EN12828 **Fuel gases** DVGW work sheet G 260 **Pressure tank** DIN EN764-7
Function	Pressure monitor or pressure limiter (with external interlock)
Direction of action	**For maximum and minimum pressure monitoring (DWFS, SDBFS)**
Sensor	**"of special construction"** by testing with 2 million cycles.

Product Summary

Type	Setting range	Switching differential (Tolerance)	Maximum working pressure	Dimensioned drawing
Pressure monitors without differential adjustment				**p. 21+22**
DWR06	0,1…0,6 bar	10 ... 50 mbar	6 bar	1 + 15
DWR1	0,2…1,6 bar	40 ... 100 mbar		
DWR3	0,2…2,5 bar	40 ... 160 mbar	16 bar	1 + 18
DWR6	0,5…6 bar	0,08 ... 0,3 bar		
DWR625	0,5…6 bar	0,08 ... 0,3 bar	25 bar	1 + 17
DWR16	3…16 bar	0,2 ... 0,6 bar		
DWR25	4…25 bar	0,3 ... 1,5 bar	63 bar	1 + 16
DWR40	8…40 bar	0,8 ... 1,6 bar		
Switching differential adjustable				
DWR06–203	0,1…0,6 bar	0,08 … 0,5 bar	6 bar	1 + 15
DWR1–203	0,2…1,6 bar	0,15 … 0,6 bar		
DWR3–203	0,2…2,5 bar	0,17 … 1,4 bar	16 bar	1 + 18
DWR6–203	0,5…6 bar	0,3 … 1,7 bar		
DWR625–203	0,5…6 bar	0,4 … 2,5 bar	25 bar	1 + 17
DWR16–203	3…16 bar	0,75 … 3,15 bar		
DWR25–203	4…25 bar	1,3 … 6,0 bar	63 bar	1 + 16
DWR40–203	8…40 bar	2,3 … 6,6 bar		

Ex-DWR
see page 66

DWR625-205

DWR

Pressure limiters

Especially suitable as a pressure limiter for fuel gases (DVGW work sheet G 260) and liquid fuels (e.g. fuel oil), as well as for steam systems according to TRBS and hot water systems to DIN EN12828, systems in accordance to DIN EN12952-11 and DIN EN12953-9.

The DWR-205/-206 is used to limit maximum and minimum pressures and has an internal interlock.

SIL 2 according IEC 61508-2

Component tested for	**Steam** System according to TRBS **Hot water** System according to DIN EN12828 **Fuel gases** DVGW work sheet G 260 **Pressure tank** DIN EN764-7
Function	Pressure limiter (with internal interlock)
Direction of action	**For maximum and minimum pressure monitoring (SDBFS)**
Sensor	**"Of special construction"** by testing with 2 million cycles.

Important: When selecting the limiter, it is necessary to decide whether the device is to be used for maximum or minimum pressure monitoring. The direction of action cannot be reversed at the pressure limiter.

Product Summary

Type	Setting range	Switching differential (Tolerance)	Maximum working pressure	Dimensioned drawing
Maximum pressure limiters				**page 21 + 22**
DWR06–205	0,1…0,6 bar	35 ... 73 mbar	6 bar	1 + 15
DWR1–205	0,2…1,6 bar	53 ... 111 mbar		
DWR3–205	0,2…2,5 bar	107 ... 218 mbar	16 bar	1 + 18
DWR6–205	0,5…6 bar	0,17 ... 0,35 bar		
DWR625–205	0,5…6 bar	0,22 ... 0,45 bar	25 bar	1 + 17
DWR16–205	3…16 bar	0,40 ... 0,81 bar		
DWR25–205	4…25 bar	0,80 ... 1,67 bar	63 bar	1 + 16
DWR40–205	8…40 bar	1,32 ... 2,75 bar		
Minimum pressure limiters				
DWR06–206	0,1…0,6 bar	35 ... 73 mbar	6 bar	1 + 15
DWR1–206	0,2…1,6 bar	53 ... 111 mbar		
DWR3–206	0,2…2,5 bar	107 ... 218 mbar	16 bar	1 + 18
DWR6–206	0,5…6 bar	0,17 ... 0,35 bar		
DWR625–206	0,5…6 bar	0,22 ... 0,45 bar	25 bar	1 + 17
DWR16–206	3…16 bar	0,40 ... 0,81 bar		
DWR25–206	4…25 bar	0,80 ... 1,67 bar	63 bar	1 + 16
DWR40–206	8…40 bar	1,32 ... 2,75 bar		

Pressure monitors DWR… (page 55) can also be used as maximum pressure and minimum pressure limiters with external interlock. You will find other maximum pressure limiters with safety sensor, type series SDBAM…, on page 49. Types DWAM… can also be used with external interlock as maximum pressure limiters.

Technical data

Pressure connection
External thread G 1/2 (pressure gauge connection) to DIN 16 288 and internal thread G 1/4 to ISO 228 Part 1 (for gas applications internal thread permissible only up to 4 bar).

Switching device
Rugged housing (200) made of seawater resistant die cast aluminium.

Materials
Pressure bellows: Material no. 1.4571
Sensor housing: Material no. 1.4104
Switch housing: GD Al Si 12 (DIN 1725)

Mounting position Vertically upright and horizontal.

Ambient temperature at switching device
–25…+70°C

Medium temperature –25…+70°C.
The medium temperature at the pressure sensor must not exceed the permitted ambient temperature at the switching device. Temperatures may reach 85°C for short periods. Higher medium temperatures are possible provided the above limit values for the switching device are ensured by suitable measures (e.g. siphon).

Mounting
Directly on the pressure line (pressure gauge connection) or on a flat surface with two 4 mm Ø screws.

Calibration
The **DWR-205** series is calibrated for rising pressure. This means that the adjustable switching pressure on the scale corresponds to the switching point at rising pressure. The reset point is lower by the amount of the switching differential. (See also page 23, 2. Calibration at upper switching point). The **DWR-206** series is calibrated for falling pressure. This means that the adjustable switching pressure on the scale corresponds to the switching point at falling pressure. The reset point is higher by the amount of the switching differential. (See also page 23, 1. Calibration at lower switching point).

Bursting pressure For all types ≥ 100 bar, verified by TÜV test.

Switching differential For values see Product Summary.

Contact arrangement Single pole change over switch.

Switching capacity	250 VAC (ohm)	250 VAC (ind)	250 VDC (ohm)	24 VDC (ohm)
Normal	8 A	5 A	0.3 A	8 A

Protection class IP 54 according to DIN 40 050

Sealing P2
On request (can be fitted later).

FEMA by Honeywell

CE TÜV tested DIN Geprüft DVGW TÜV

Protection Class: IP 54

General information about explosion protection

Basic principle

The basic principle of explosion protection is that:

a) combustible materials (gas, steam, mist or dust) in dangerous quantities
b) air (or oxygen)
c) ignition sources

must not occur in the same place.

The permanent or temporary occurrence of explosive mixtures as per a) and b) is often unavoidable, therefore when operating electrical installations care must be taken to ensure that no ignition sources can occur.

In order to accomplish this, standards have been legislated in Europe serving as a basis for various different types of ignition protection. These standards have been recognized in all European countries. Equipment for the reliable prevention of the ignition of ambient explosive gas mixtures must be constructed according to these standards.

In addition to ISO9000ff applies to the production monitoring, the ISO/IEC 80079-34 for ex-protected areas.

These standards are based on European Directive 2014/34/EU (ATEX). The goal of this regulation is the harmonization of statutory regulations EN60079 in the area of explosion protection as well as the elimination of trade barriers between Member States. This Directive provides for the harmonization of all standards relevant to the construction of equipment with ignition protection.

The most important types of ignition protection for FEMA products are as follows:

"Ex-d" pressure proof encapsulation	**EN 60079-1**
"Ex-e" enhanced safety	**EN 60079-7**
"Ex-t" protection via housing	**EN 60079-31**
"Ex-i" intrinsically safety	**EN 60079-11**

Pressure switches
Specially designed FEMA Ex-protected pressure switches are available for use in ex-protection areas. They conform to these standards and are type-tested (Ex-d, Ex-e, Ex-t) and / or have been technically prepared for these areas (Ex-i).

"Ex-d" Pressure-Proof Encapsulation
Switch components and other electrical functional units capable of igniting explosive gas mixtures are encapsulated in a housing which will survive the explosive pressure of an internal explosion and the special design of which prevents the transference of this explosion to the ambient atmosphere.

"Ex-e" Enhanced Safety
This type of ignition protection pertains to the special design of the terminal connection housing. The connection area is grouted and thus specially separated from the microswitch. A type tested terminal block, a type tested cable gland, and the IP65 protection degree all ensure an enhanced safety of "Ex-e" in the connection housing.

"Ex-t" Protection via Housing
This type of ignition protection pertains to dust explosion protection and is based upon the reliable protection of ignition sources against atmospheric dust. For FEMA pressure switches and thermostats for use in dust explosion protected areas, a protection degree of IP65 is required. Together with devices according to "Ex-d" and "Ex-e," devices with "Ex-t" protection are approved for use in gaseous and dust laden atmospheres.

"Ex-i" Intrinsically Safety
The equipment employed in explosion relevant areas are components of inherently safe electrical circuits. An electrical circuit is inherently safe if the amount of energy it contains is so small that no spark or other thermal effect can arise. This reliably prevents the ignition of explosive gas mixtures in the proximity of this equipment. In the context of this directive, pressure switches and thermostats containing no switching components with energy storage effects are referred to as "simple electrical equipment."

General information about explosion protection

Zone classification

Explosion risk areas are grouped into zones according to the likelihood of a dangerous explosive atmosphere **according to EN 1127-1** occurring.
When assessing the explosion hazard, i.e. when identifying explosion risk areas, the "Guidelines for the Avoidance of Danger due to Explosive Atmospheres with Examples (ExRL)" of the German Insurance Association for the Chemical Industry must be taken into account.
If the situation concerns a special case or if doubts exist as to the definition of explosion risk areas, the matter shall be decided by the supervisory authorities (Trade Supervisory Office, where applicable with the assistance of the Insurance Association or the Technical Control Boards.

In Zones 0 (20) and 1 (21), only electrical equipment for which a type test certificate has been issued by a recognized testing agency may be used. In Zone 0 (20), however, only equipment expressly authorized for that zone may be used. Equipment approved for use in Zones 0 (20) and 1 (21) may also be used in Zone 2 (22). Under the new European Directive 94/9 EC (ATEX 100a), a distinction is made between **gas atmospheres** and **dust atmospheres**. This results in the following zone classifications:

Gas	**Zone 0**	**continuously or for long periods**	**Zone 0** (gas) is a place in which a dangerous explosive atmosphere is present continuously or for long periods. This normally includes only the interior of containers or the interior of apparatus (evaporators, reaction vessels etc.), if the conditions of Zone 0 are fulfilled. Continuous danger > 1000 hours / year.
	Zone 1	**occasionally**	**Zone 1** (gas) is a place in which a dangerous explosive atmosphere can be expected to occur occasionally in normal operation. This may include the immediate vicinity of Zone 0. Occasional danger = 10 to 1000 hours / year.
	Zone 2	**seldom and for short periods**	**Zone 2** (gas) is a place in which a dangerous explosive atmosphere can be expected to occur only rarely and then only for short periods. This may include areas surrounding Zones 0 and/or 1. Danger only under abnormal operating conditions < 10 hours / year.
Dust	**Zone 20**	**continuously or for long periods**	**Zone 20** (dust) is a place in which a dangerous explosive atmosphere in the form of a cloud of dust in air is present continuously or for long periods, and in which dust deposits of unknown or excessive thickness may be formed. Dust deposits on their own do not form a Zone 20. Continuous danger > 1000 hours / year.
	Zone 21	**occasionally**	**Zone 21** (dust) is a place in which a dangerous explosive atmosphere in the form of a cloud of dust in air may occasionally occur in normal operation, and in which deposits or layers of inflammable dust may generally be present. This may also include the immediate vicinity of Zone 20. Occasional danger = 10 to 1000 hours / year.
	Zone 22	**seldom and for short periods**	**Zone 22** (dust) is a place in which a dangerous explosive atmosphere may be expected to occur only rarely and then only for short periods. This may include areas in the vicinity of Zones 20 and 21. Danger only under abnormal operating conditions < 10 hours / year.

General information about explosion protection

Explosion group

The requirements for explosion protected equipment depend on the gases and / or steam present on the equipment and on the dusts lying on, adhering to and / or surrounding the equipment. This affects the gap dimensions required for pressure proof encapsulation and, in the case of intrinsically safe circuits, the maximum permitted current and voltage values. Gases, steam and dusts are therefore subdivided into various explosion groups.
The danger of the gases rises from explosion group IIA to IIC. The requirements for electrical equipment in these explosion groups increase accordingly. Electrical equipment approved for IIC may also be used for all other explosion groups.

Temperature class

The maximum surface temperature of an item of equipment must always be lower than the ignition temperature of the gas, steam or dust mixture. The temperature class is therefore a measure of the maximum surface temperature of an item of equipment.

Temperature class °C	Ignition temperature °C	Maximum surface temperature °C
T1	> 450	450
T2	> 300	300
T3	> 200	200
T4	> 135	135
T5	> 100	100
T6	> 85	85

Equipment Protection Level (EPL)

In addition to the afore mentioned types of ignition protection, the new norms IEC and EN60079ff have introduced the corresponding Equipment Protection Levels (EPL).

Zone (Gas-Ex)	EPL	Zone (Staub-Ex)	EPL	Protection Level
0	Ga	20	Da	highest
1	Gb	21	Db	high
2	Gc	22	Dc	standard

Example: Ex d e IIC T6 Gb:
Device is designed for Zone 1 for gas group IIC and gas equipment protection level "high level of protection".

Marking of Explosion-Protected Electrical Equipment

In addition to the usual data (manufacturer, model, serial number, electrical data), the explosion protection information is likewise to be included in the marking.
According to Directive 2014/34/EC (ATEX), in compliance with the IEC recommendation and the currently valid standards, the following forms of identification are to be followed.

Example for FEMA Pressure Switch

CE 0035 Ex II 1/2D Ex ta/tb IIIC T80°C Da/Db

- CE — European Standard
- 0035 — No. of supervisory body
- Ex — Ex-Protection Symbol
- II — Equipment group II
- 1/2D — Category 1/2 (for zone 20 at sensor, 1 resp. 21 at unit)
- Application D for dust
- Ex — Ex symbols as per IEC
- ta/tb — Ignition protection Ex-t a/b for Da (sensor) / Db for switching device
- IIIC — Explosion group for Dust IIIC
- T80°C — Temperature class
- Da/Db — EPL Protection level

Ex devices

Pressure monitoring in explosion risk areas, Zones 1, 2 and 20, 21, 22

Specially equipped pressure switches can also be used in explosion risk areas Zone 1, 2 and 20, 21, 22. The following alternatives are possible:

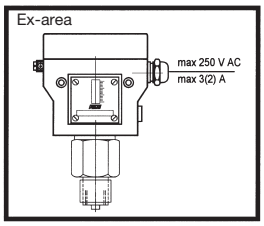

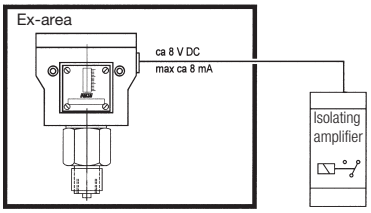

1. Type of ignition protection Ex-d, Ex-e and Ex-t:
The pressure switch with protection type "Flameproof Ex-d and Increased Safety Ex-e" can be used with the switch device in hazardous areas of zone 1 and 2 for flammable gas mixtures. For use in dust atmospheres, the protection is "protected by enclosure Ex-t".
The switching device may be used in hazardous areas of zones 21 and 22 for explosive dusts. In addition, for the dust explosion protection zone 20 on the sensor (device screwed into container walls, which may occur in the interior permanent dust atmosphere).
The permissible values for switching voltage, switching capacity and ambient temperature please refer to the detailed description of the Ex-equipment, and the installation and operating instructions. In addition, please note the general rules for the use and installation of equipment in hazardous atmosphere.
Special circuits, as well as versions with adjustable switching differential or internal interlock (reclosing lock) are not possible.

2. Ignition protection Ex-i
All pressure switches with features for intrinsically safe circuits can be used with the switching device in hazardous areas Zone 1 and 2 (Gas) and zones 21 and 22 (Dust). In addition, the sensor in hazardous areas Zone 0 (Gas) and 20 (Dust) may be screwed. (Inside tank = defined as zone 0 or zone 20). A circuit is considered to be "intrinsically safe" if the amount of energy conveyed therein is not capable of generating an ignitable sparks. This pressure switch can only be operated in combination with a suitable isolating switching amplifier, which is approved for the type Ex-i. Suitable variants must be selected for this pressure switch with resistor combination for line and short circuit monitoring. Because of the low voltages and currents in intrinsically safe circuits, micro switches with gold contacts are used for pressure monitors with automatic reset. For limiter (with internal interlock) micro switches with silver contacts are used. FEMA pressure switches for use in intrinsically safe circuits are marked by blue terminals and cable entries. In addition, the pressure switch has been tested by a "notified body". The units get a serial number and the nameplate inform about the ignition protection and registration number.

Ignition protection for pressure monitoring in Zones 0 (20), 1 (21) and 2 (22)

Pressure proof encapsulation Ex-d (EN 60079-0:2009) Enhanced safety Ex-e (EN 60079-7:2007) Protection via housing Ex-t (EN60079-31:2009) Ex-...	**Intrinsically safe Ex-i (EN 60079 - 11: 2012) D...513, ...-563 (gold-plated contact, monitor) D...575, ...-577 (silver-plated contact, limiter)**
Ignition protection type: CE 0035 Ex II 2G Ex d e IIC T6 Gb CE 0035 Ex II 1/2D Ex ta/tb IIIC T80°C Da/Db	Ignition protection type: CE 0035 Ex II 1/2G Ex ia T6 Ga/Gb CE 0035 Ex II 1/2D Ex ia IIIC T85ºC
ATEX approval for the complete switching device	ATEX approval for the complete switching device and for isolating amplifier
Pressure switches with a silver contact	Pressure switches with gold plated contacts (monitors) Pressure switches with silver plated contacts (limiter)
Switching capacity: max. 3 A, 250 VAC min. 2mA, 24 VDC	Rate value without resistor combination …-513 /…-563: Ui: 24VDC Ii: 100mA Ci: 1nF Li: 100µH Rate value with resistor combination …-574 / …-575 / …-576 / …-577: Ui: 14VDC Ri: 1500 Ohm Ci: 1nF Li: 100µH
The pressure switch can be installed within the Ex-Zone.	Pressure switch will be installed in Ex-Zone The isolating amplifier must be installed outside the Ex-Zone.

Mechanical EX-pressure switches

	Type	Medium	Pressure range	Temperature range	Directive for CE	Testing basis	Comments
Pressure proof encapsulation Ex-d	**EX-DCM** **EX-DNM**	non aggressive liquids and gases	1…25 mbar. 1…10 bar, 16...63 bar	-20…+60°C	ATEX 2014/34/EU IECEx	DIN EN60730 DIN EN60079	Mechanical Ex-d pressure switch
	EX-DNS **EX-VNS**	aggressive liquids and gases	-1…16 bar	-20…+60°C	ATEX 2014/34/EU IECEx	DIN EN60730 DIN EN60079	Mechanical Ex-d pressure/vacuum switch with stainless steel sensor 1.4571
	EX-DDCM	liquids and gases	4 mbar…16 bar	-20…+60°C	ATEX 2014/34/EU IECEx	DIN EN60730 DIN EN60079	Mechanical Ex-d differential pressure monitor
	EX-VCM **EX-VNM**	liquids and gases	-1…0,5 bar	-20…+60°C	ATEX 2014/34/EU IECEx	DIN EN60730 DIN EN60079	Mechanical Ex-d vacuum switch
	EX-DGM	fuel gases	15…250 mbar	-20…+60°C	ATEX 2014/34/EU IECEx EU/2016/426	DIN EN 1854 DIN EN60730 DIN EN60079	Mechanical Ex-d pressure monitor for gases in accordance with DVGW work sheet G260
	EX-DWR	Steam, hot water, fuel gases and liquied fuels	0,1…40 bar	-20…+60°C	ATEX 2014/34/EU IECEx DGR 2014/68/EU EU/2016/426	VdTÜV Druck 100 DIN EN 1854 DIN EN12952-11 DIN EN12953-9 DIN EN 764-7 DIN EN60079	Mechanical Ex-d pressure switch, Sensor of special construction by testing with 2 milion operating cycles
Intrinsically safe	**DCMx-5xx**	non aggressive liquids and gases	1 mbar…63 bar	-25…+60°C*	ATEX 2014/34/EU IECEx	DIN EN60730	Mechanical Ex-i pressure switch
	VCMx-5xx **VNMx-5xx**	liquids and gases	-1…0,5 bar	-25…+60°C*	ATEX 2014/34/EU IECEx	DIN EN60730	Mechanical Ex-i vacuum switch
	VNSx-5xx **DNSx-5xx**	aggressive liquids and gases	-1…16 bar	-25…+60°C	ATEX 2014/34/EU IECEx	DIN EN60730	Mechanical Ex-i pressure/ vacuum switch with stainless steel sensor 1.4571
	DDCMx-5xx	liquids and gases	4 mbar…16 bar	-25…+60°C	ATEX 2014/34/EU IECEx	DIN EN60730 DIN EN 60079	Mechanical Ex-i differential pressure monitor
	DWAMx-5xx	Steam and hot water	0,1…32 bar	-20…+60°C	ATEX 2014/34/EU IECEx DGR 2014/68/EU	VdTÜV Druck 100 DIN EN 12952-11 DIN EN 12953-9	Mechanical Ex-i Pressure monitor and Pressure limiter
	DGMx-5xx	fuel gases	15…1,6 bar	-25…+60°C	ATEX 2014/34/EU IECEx EU/2016/426	DIN EN 1854	Mechanical Ex-i pressure monitor for gases in accordance with DVGW work sheet G260
	DWRx-5xx	Steam, hot water, fuel gases and liquied fuels	0,1…40 bar	-25…+60°C	ATEX 2014/34/EU IECEx EU/2016/426 DGR 2014/68/EU	VdTÜV Druck 100 DIN EN 1854 DIN EN12952-11 DIN EN12953-9 DIN EN 764-7 DIN EN60079	Mechanical Ex-i pressure switch, Sensor of special construction by testing with 2 milion operating cycles
	FD16-326 **FD16-327**	liquid gas	3…16 bar	-25…+60°C	ATEX 2014/34/EU IECEx DGR 2014/68/EU	VdTÜV Druck 100 DIN EN 764-7	Mechanical Ex-i maximum pressure limiter for liquid gas installations

*: -15….+60°C for DCM4016-5..,DCM4025-5.., VCM4156-5..

Ex-DNM10

Ex-DCM / Ex-DNM

II 2G Ex d e IIC T6 Gb

II 1/2D Ex ta/tb IIIC T80 °C Da/Db

This universal pressure switch can be used in general mechanical engineering and the printing machine industry, as well as in pneumatics and hydraulics.

SIL 2 according IEC 61508-2

Technical data

Pressure connection
External thread G 1/2 (pressure gauge connection) according to DIN 16 288 and internal thread G 1/4 according to ISO 228 Part 1.

Switching device
Robust housing (700) made of seawater resistant die cast aluminium GD Al Si 12.

Protection class
IP 65, in vertical position.

Pressure sensor materials

Ex-DNM	Metal bellows: 1.4571 Sensor housing: 1.4104
Ex-DCM4016/ Ex-DCM4025	Diaphragm: Perbunan Sensor housing: 1.4301

Mounting position
Vertically upright.

Ambient temp. at switching device
–20…+60 °C

Max. medium temperature
The maximum medium temperature at the pressure sensor must not exceed the permitted ambient temperature at the switching device. Higher medium temperatures are possible provided the above limit values for the switching device are ensured by suitable measures (e.g. siphon).

Mounting
Directly on the pressure line (pressure gauge connection) or on a flat surface with two 4 mm Ø screws.

Switching pressure
Adjustable from outside with screw driver.

Contact arrangement
Single pole change over switch.

Switching capacity	250 VAC (ohm)	(ind)	250 VDC (ohm)	24 VDC (ohm)
Ex-d	3 A	2 A	0.1 A	3 A

Product Summary

Type	Setting range	Switching differential (Tolerance)	Max. permissible pressure	Materials in contact with medium	Dimen-sioned drawing
Switching differential not adjustable					**page 21+22**
Ex-DCM4016	1…16 mbar	0,2 ... 2 mbar	1 bar	Perbunan	4 + 11
Ex-DCM4025	4…25 mbar	0,2 ... 4 mbar	1 bar	+ 1.4301	4 + 11

For other Ex-devices, see type series VCM, DNS, DDCM, DWR, DGM.

Type	Setting range	Switching differential (Tolerance)	Max. permissible pressure	Dimen-sioned drawing
Ex-DNM10	1…10 bar	0,05 ... 0,3 bar	25 bar	4 + 17
Ex-DNM63	16…63 bar	0,2 ... 2,0 bar	130 bar	4 + 16

Calibration

The **Ex-DCM/Ex-DNM** series is calibrated for falling pressure. This means that the adjustable switching pressure on the scale corresponds to the switching point at falling pressure. The reset point is higher by the amount of the switching differential. (See also page 23, 1. Calibration at lower switching point).

Ex-DNS3

Ex-DNS/Ex-VNS

II 2G Ex d e IIC T6 Gb

II 1/2D Ex ta/tb IIIC T80 °C Da/Db

Pressure switches of the DNS series and suitable for monitoring and controlling pressures in chemical plants, process engineering and any situationwhere the pressure of aggressive liqui sand gases must be monitored.

All components of the sensor system are made of high quality stainless steel (1.4571) and welded using the latest methods without filler metals. The pressure sensor is gasket free plasma welded.

SIL 2 according IEC 61508-2

Technical data

Pressure connection
External thread G 1/2 (pressure gauge connection) according to DIN 16 288 and internal thread G 1/4 according to ISO 228 Part 1.

Switching device
Robust housing (700) made of seawater resistant die cast aluminium GD Al Si 12.

Protection class
IP 65

Pressure sensor materials
Pressure bellows and all parts in contact with medium. X 6 Cr Ni Mo Ti 17122 Material no. 1.4571

Mounting position
Vertically upright.

Max. ambient temperature at switching device
–20…+60 °C.

Max. medium temperature
The maximum medium temperature at the pressure sensor must not exceed the permitted ambient temperature at the switching device. Higher medium temperatures are possible provided the above limit values for the switching device are ensured by suitable measures (e.g. siphon).

Mounting
Directly on the pressure line (pressure gauge connection) or on a flat surface with two 4 mm Ø screws.

Switching pressure
Adjustable from outside with screw driver.

Contact arrangement
Single pole change over switch.

Switching capacity	250 VAC (ohm)	250 VAC (ind)	250 VDC (ohm)	24 VDC (ohm)
Ex-d	3 A	2 A	0.1 A	3 A

Plastic coating
The die cast aluminium housing in GD Al Si is chromated and stove enamelled with resistant plastic. Corrosion tests with 3% saline solution and 30 temperature changes from +10 to +80°C showed no surface changes after 20 days.

Product Summary

Type	Setting range	Switching differential (Tolerance)	Max. permissible pressure	Dimensioned drawing
Switching differential not adjustable				**page 21 + 22**
Ex-VNS301	–250…+100 mbar	10 ... 60 mbar	3 bar	4 + 15
Ex-VNS111	–1*…+0,1 bar	10 ... 65 mbar	6 bar	
Ex-DNS025	0,04…0,25 bar	20 ... 37 mbar	6 bar	
Ex-DNS06	0,1…0,6 bar	10 ... 35 mbar	6 bar	
Ex-DNS1	0,2…1,6 bar	10 ... 40 mbar	6 bar	
Ex-DNS3	0,2…2,5 bar	10 ... 90 mbar	16 bar	4 + 18
Ex-DNS6	0,5…6 bar	0,05 ... 0,2 bar	16 bar	
Ex-DNS10	1…10 bar	0,05 ... 0,3 bar	16 bar	4 + 17
Ex-DNS16	3…16 bar	0,05 ... 0,3 bar	25 bar	

* At very high vacuums, close to the theoretical maximum of –1 bar, the switch may not be usable in view of the special conditions of vacuum engineering. However, the pressure switch itself will not be damaged at maximum vacuum.

Calibration

The **Ex-DNS** and **Ex-VNS** series are calibrated for falling pressure. This means that the adjustable switching pressure on the scale corresponds to the switching point at falling pressure. The reset point is higher by the amount of the switching differential. (See also page 23, 1. Calibration at lower switching point).

IECEx

Protection Class:
IP 65

Ex-DDCM1 (stainless steel sensor)

Ex-DDCM

II 2G Ex d e IIC T6 Gb

II 1/2D Ex ta/tb IIIC T80 ºC Da/Db

FEMA differential pressure monitors are suitable for monitoring and controlling differential pressures, flow monitoring and automatic control of filter systems. A double chamber system with stainless steel bellows of Perbunan diaphragm detects the difference between the two applied pressures. The desired switching pressure is continuously adjustable within the ranges mentioned in the product summary. All differential pressure monitors can also be used in the vacuum range.
The switching differential is not adjustable.

SIL 2 according IEC 61508-2

Technical data

Pressure connection
Internal thread G 1/4

Switching device
Robust housing (700) made of seawater resistant die cast aluminium GD Al Si 12.

Protection class
IP 65

Pressure sensor materials
Ex-DDCM014–16:
Ex-Pressure bellows of 1.4571
Sensor housing of 1.4305.
DDCM252–6002:
Perbunan diaphragm.
Aluminium sensor housing.

Mounting position
vertically upright.

Ambient temperature at switching device
–20…+60 °C

Max. medium temperature
The maximum medium temperature at the pressure sensor must not exceed the permitted ambient temperature at the switching device. Higher medium temperatures are possible provided the above limit values for the switching device are ensured by suitable measures (e.g. siphon).

Mounting
Directly on the pressure line or on a flat surface with two 4 mm Ø screws.
Note the connection of pressurized lines:
P (+) = high pressure
S (–) = low pressure

Switching pressure
Adjustable from outside with screw driver.

Switching capacity	250 VAC (ohm)	250 VAC (ind)	250 VDC (ohm)	24 VDC (ohm)
Ex-d	3 A	2 A	0.1 A	3 A

Type	Setting range (differential pressure)	Switching differential (Tolerance)	Max.** permissible pressure	Materials in contact with medium	Dimen-sioned drawing
Switching differential not adjustable					**page 21 + 22**
Ex-DDCM252*	4…25 mbar	0,7 ... 6,5 mbar	0,5 bar		
Ex-DDCM662*	10…60 mbar	0,5 ... 13 mbar	1,5 bar	Aluminium	4 + 20
Ex-DDCM1602*	20…160 mbar	0,5 ... 15 mbar	3 bar	+ Perbunan	
Ex-DDCM6002*	100…600 mbar	0,5 ... 32 mbar	3 bar		
Ex-DDCM014*	-0,1…0,4 bar	20 ... 200 mbar	15 bar		
Ex-DDCM1	0,2…1,6 bar	40 ... 120 mbar	15 bar	stainless steel	
Ex-DDCM4*	1…4 bar	50 ... 300 mbar	25 bar	1.4305 +	4 + 21
Ex-DDCM6	0,5…6 bar	50 ... 150 mbar	15 bar	1.4571	
Ex-DDCM16	3…16 bar	50 ... 400 mbar	25 bar		

* without graduation (only ± scale) set according to pressure gauge.
** also loadable on one side

Accessories:
· Threaded joint with male adapter union G 1/4"/8 mm MAU8/Ms and MAU8/Nst page 145
· Valve combinations VKD3 and VKD5, page 144

Calibration

The **Ex-DDCM** series is calibrated for falling pressure. This means that the adjustable switching pressure on the scale corresponds to the switching point at falling pressure. The reset point is higher by the amount of the switching differential. (See also page 23, 1. Calibration at lower switching point).

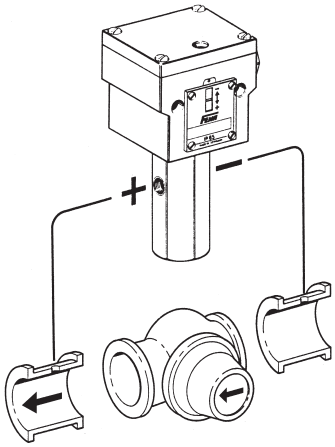

Pump monitoring application example

The differential pressure switch (e.g. Ex-DDCM1) monitors differential pressure through the pump. The system shuts down if values fall below an adjustable switching threshold. Pump monitoring does not depend on the static pressure in the system.

Ex-VNM111

Ex-VCM/Ex-VNM

II 2G Ex d e IIC T6 Gb
II 1/2D Ex ta/tb IIIC T80 °C Da/Db

FEMA negative pressure switches detect the pressure difference relative to atmospheric pressure. All data relating to the switching pressure ranges and thus also the scale divisions on the switching devices are to be understood as the difference in pressure between the releant atmospheric pressure and the set switching pressure. The "zero" reference point on the scale of the unit corresponds to the relevant atmospheric pressure.

SIL 2 according IEC 61508-2

Technical data

Pressure connection
External thread G 1/2 (pressure gauge connection) according to DIN 16 288 and internal thread G 1/4 according to ISO 228 Part 1.

Switching device
Robust housing (700) made of seawater resistant die cast aluminium GD Al Si 12.

Protection class
IP 65

Pressure sensor materials

Ex-VNM111 and Ex-VNM301:	Metal bellows: 1.4571 Sensor housing: 1.4104
Ex-VCM095, 101 and 301:	Metal bellows of Cu Zn Sensor housing of CuZn
Ex-VCM4156:	Perbunan diaphragm sensor housing: 1.4301

Mounting position
Vertically upright.

Ambient temp. at switching device
–20…+60 °C

Max. medium temperature
The maximum medium temperature at the pressure sensor must not exceed the permitted ambient temperature at the switching device. Higher medium temperatures are possible provided the above limit values for the switching device are ensured by suitable measures (e.g. siphon).

Mounting
Directly on the pressure line (pressure gauge connection) or on a flat surface with two 4 mm Ø screws.

Switching pressure
Adjustable from outside with screw driver.

Contact arrangement
Single pole change over switch.

Switching capacity	250 VAC (ohm)	(ind)	250 VDC (ohm)	24 VDC (ohm)
Ex-d	3 A	2 A	0.1 A	3 A

Product Summary

Type	Setting range	Switching differential (Tolerance)	Max. permissible pressure	Dimensioned drawing
Switching differential not adjustable				**page 21 + 22**
Ex-VCM4156	–15…+6 mbar	0,2 ... 3,5 mbar	1 bar	4 + 11
Ex-VCM301	–250…+100 mbar	2 ... 25 mbar	1,5 bar	4 + 13
Ex-VNM301	–250…+100 mbar	2 ... 25 mbar	3 bar	4 + 15
Ex-VCM101	–1*…+0,1 bar	10 ... 40 mbar	3 bar	4 + 14
Ex-VCM095	–0,9…+0,5 bar	10 ... 50 mbar	3 bar	4 + 14
Ex-VNM111	–1*…+0,1 bar	10 ... 40 mbar	6 bar	4 + 15

* At very high vacuums, close to the theoretical maximum of –1 bar, the switch may not be usable in view of the special conditions of vacuum engineering. However, the pressure switch itself will not be damaged at maximum vacuum.

Calibration

The **Ex-VCM** and **Ex-VNM** series are calibrated for falling pressure. This means that the adjustable switching pressure on the scale corresponds to the switching point at falling pressure. The reset point is higher by the amount of the switching differential. (See also page 23, 1. Calibration at lower switching point).

Ex-DWR25

Ex-DWR

II 2G Ex d e IIC T6 Gb
II 1/2D Ex ta/tb IIIC T80 °C Da/Db

Especially suitable as a pressure monitor or pressure limiter for fuel gases (DVGW work sheet G 260) and liquid fuels (e.g. fuel oil), as well as for steam systems according to TRD 604 and hot-water systems to DIN EN12828, systems in accordance to DIN EN12952-11 and DIN EN12953-9. The DWR is used to monitor maximum and minimum pressures. This pressure switch is "of special construction" and has been tested with 2 million operating cycles. TÜV and DVGW tests exists.

SIL 2 according IEC 61508-2

Technical data

Pressure connection
External thread G 1/2 (pressure gauge connection) to DIN 16 288 and internal thread G 1/4 to ISO 228 Part 1 (for gas applications internal thread permissible only up to 4 bar).

Switching device
Rugged housing (700) made of seawater resistant die cast aluminium.

Materials
Pressure bellows: Material no. 1.4571
Sensor housing: Material no. 1.4104 Switch housing: GD Al Si 12 (DIN 1725)

Mounting position
Vertically upright

Ambient temperature at switching device
–20 to +60°C.
Medium temperature –25 to +60°C. The maximum medium temperature at the pressure sensor must not exceed the permitted ambient temperature at the switching device. Higher medium temperatures are possible provided the above limit values for the switching device are ensured by suitable measures (e.g. siphon).

Mounting
Directly on the pressure line (pressure gauge connection) or on a flat surface with two 4 mm Ø screws.

Bursting pressure
For all types ≥ 100 bar, verified by TÜV test.

Contact arrangement Single pole change over switch.

Switching capacity	250 VAC (ohm)	(ind)	250 VDC (ohm)	24 VDC (ohm)
Ex-d	3 A	2 A	0.1 A	3 A

Protection class IP 65, only vertically upright

Ex protection
EEx de IIC T6

Component tested for

Steam	Systems according to TRD 604
Hot water	Systems according to DIN EN12828
Fuel gases	DVGW work sheet G 260
Pressure tank	DIN EN764-7

Function

Pressure monitor or pressure limiter (with external interlock)

Direction of action

For maximum and minimum pressure monitoring (DWFS, SDBFS)

Sensor

"of special construction" by testing with 2 million cycles.

Type	Setting range	Switching differential (Tolerance)	Maximum working pressure	Dimensioned drawing
Switching differential not adjustable				**page 21 + 22**
Ex-DWR06	0,1…0,6 bar	10 ... 50 mbar	6 bar	4 + 15
Ex-DWR1	0,2…1,6 bar	10 ... 60 mbar		
Ex-DWR3	0,2…2,5 bar	20 ... 100 mbar	16 bar	4 + 18
Ex-DWR6	0,5…6 bar	30 ... 300 mbar		
Ex-DWR625	0,5…6 bar	20 ... 300 mbar	25 bar	4 + 17
Ex-DWR16	3…16 bar	0,2 ... 0,6 bar		
Ex-DWR25	4…25 bar	0,1 ... 1,5 bar	63 bar	4 + 16
Ex-DWR40	8…40 bar	0,1 ... 1,6 bar		

Calibration
The Ex-DWR series is calibrated for rising pressure. This means that the adjustable switching pressure on the scale corresponds to the switching point at rising pressure. The reset point is lower by the amount of the switching differential. (See also page 23, 2. Calibration at upper switching point).

Ex-DGM525

Ex-DGM

II 2G Ex d e IIC T6 Gb
II 1/2D Ex ta/tb IIIC T80 °C Da/Db

DVGW tested to DIN EN1854
Gas pressure monitors are suitable for all gases in accordance with DVGW work sheet G260 and for air.

SIL 2 according IEC 61508-2

Technical data

Pressure connection
External thread G 1/2 to DIN 16 288 and internal thread G 1/4 to ISO 228 Part 1 (permissible up to 4 bar).

Switching device
Seawater resistant die cast aluminium GD Al Si 12.

Protection class
IP 65

Pressure sensor materials
See Product Summary

Ambient temperature –20 to +60°C.
At ambient temperatures below 0°C, ensure that condensation cannot occur in the sensor or in the switching device.

Maximum working pressure
See Product Summary

Mounting
Either directly on the pipe or with two 4 mm ø screws on the wall surface.

Mounting position
Vertically upright

Setting
Continuously adjustable via the setting spindle with a screw driver. The set switching pressure is visible in the scale window.

Switching differentials
Largely independent of the set switching pressure. Not adjustable. For values see Product Summary.

Switching capacity	250 VAC (ohm)	(ind)	250 VDC (ohm)	24 VDC (ohm)
Ex-d	3 A	2 A	0.1 A	3 A

Pressure measuring connection
Care must be taken to ensure that a pressure measuring connection is available in a suitable place on the gas appliance.

Component tested for	Fuel gases according to DVGW work sheet G 260
Testing basis	DIN EN1854
Function	Pressure monitor
Direction of action	**For maximum and minimum pressure monitoring**

Product Summary

Type	Setting range	Switching differential (Tolerance)	Max. working pressure	Materials in contact with medium	Dimensioned drawing
					page 21 + 22
Ex-DGM506	15…60 mbar	7 ... 11 mbar	5 bar	1.4104	4 + 12
Ex-DGM516	40…160 mbar	3 ... 18 mbar	5 bar	1.4104	
Ex-DGM525	100…250 mbar	3 ... 18 mbar	5 bar	1.4104	

Calibration

The **Ex-DGM** series is calibrated for rising pressure. This means that the adjustable switching pressure on the scale corresponds to the switching point at rising pressure. The reset point is lower by the amount of the switching differential. (See also page 23, 2. Calibration at upper switching point).

For other pressure ranges see type series DWR, page 66

HCD6010

HCD

Pressure and differential pressure monitors for air and fuel gase

Pressure switches of the HCD series are suitable for neutral and non aggressive gases. They can be used for monitoring overpressure and differential pressure. For overpressure detection the pressure side is connected to the lower connection piece G 1/4"; for vacuum detection the pressure side is connected to the upper connection piece G 1/8" (remove sealing clamp). For differential pressure detection, high pressure is applied to the lower connection piece (G 1/4") and low pressure to the upper connection piece (G 1/8"). A pressure measurement connection (9 mm ø) is available for accurate setpoint adjustment. The pressure switch is tested according to PE Directive EU/2016/426 and DIN EN1854 and approved by DVGW for air and fuel gases according to DVGW worksheet G 260.

Technical data

Pressure connection
Pressure connection for overpressure:
G 1/4" internal thread.
For vacuum and differential pressure:
G 1/8" internal thread.

Switch housing
Die cast aluminium.

Medium temperature
–15 to +60 °C.

Maximum working pressure
See Product Summary

Mounting position
Horizontal with connection pieces pointing downwards.

Protection class IP 40 according to DIN 40050.

Mounting
Either directly on pipe or with mounting bracket (supplied) on a vertical surface.

Setting the switching point
Remove the cover and turn the setting spindle marked +/– in the corresponding direction. The scale shows only guideline values. For accurate setpoint adjustment it is necessary to use a pressure gauge which can be attached to the measuring point (9 mm ø pressure measurement connector).

Switching function Single pole switching.

Electrical connection

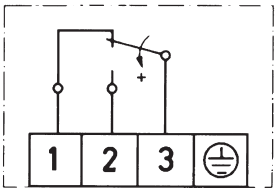

Switching capacity
2 A/220–240 VAC (inductive load)
10 A/220–240 V AC (resistive load)

Cable entry Pg 13.5

Type	Setting range	Switching differential in lower range	Switching differential in upper range	Max. working pressure
HCD6003	0,2…3 mbar	0,3… mbar	0,5 mbar	100 mbar
HCD6010	1…10 mbar	0,5… mbar	1 mbar	100 mbar
HCD6050	5…50 mbar	1,2… mbar	2,5 mbar	200 mbar
HCD6150	15…150 mbar	3,5… mbar	10 mbar	300 mbar

The switching differential is not adjustable. The low switching differentials are for the lower setting range; the higher values relate to the upper ranges.

Dimensioned drawing (mm)

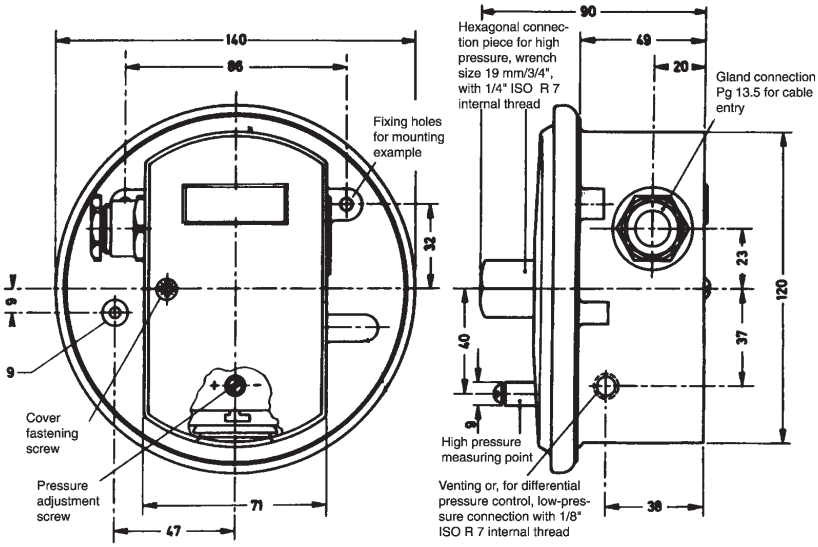

DPS400

DPS

Differential pressure switches for ventilation and air conditioning (not for fuel gases)

Differential pressure switches for filter, fan or air flow monitoring in air conditioning and ventilation systems, tested according to the EC Gas Appliance Directive EU/2016/426 and DIN EN 1854

Technical data

Pressure connection
Plastic connection piece with 6 mm external diameter for measuring hose with 5 mm internal diameter. Connector P 1 for higher pressure, P 2 for lower pressure.

Pressure medium
Air, and non combustible and non aggressive gases.

Diaphragm
made of sintered silicone is resistant to outgassing. Switching kinematics on the "P2" side.

Switch housing and parts in contact with medium
Switch housing and pressure connection P 2 made of PA 6.6. Lower part and pressure connection P 1 made of POM.

Medium and ambient temperature
–20°C to +85°C
(storage temperature –40°C to +85°C)

Maximum working pressure
100 mbar for all types.

Mounting position
vertical, pressure connections pointing downwards. (With horizontal mounting and cover facing upwards, the scale values are 20 Pa below the actual values; with horizontal mounting and cover facing downwards, the scale values are 20 Pa higher. At setting values below 50 Pa, the device must be mounted vertically!).

Protection class: IP 54

Mounting
Via fastening pieces integrated into the housing with 2 screws, mounted directly onto a vertical surface, e.g. of the air conditioning unit or air duct. For mounting in the ceiling area, use an L-shaped bracket if necessary.

Setting the switching point
Remove the cover and set the scale to the desired value. The setting values relating to the upper switching point (for maximum pressure monitoring). For minimum pressure monitoring, the switching point lies below the setting value, according to the switching differential.

Weight: 160 g

Switching function: single pole switching.

Electrical connection

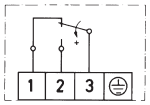

Flat plug 6.3 x 0.8 DIN 46 244 or use the screw terminals supplied.

Min. switching capacity: 5 mA / 5 VDC
Max. switching capacity: 1.5 (0.4) A / 250 VAC

Cable entry: M 16x1.5

FEMA by Honeywell

Product Summary

Type	Setting range for upper switching	Switching differential (guideline values)
DPS200	0,2…3 mbar	0.1 mbar
DPS400	0.4…4 mbar	0.2 mbar
DPS500	0.5…5 mbar	0.2 mbar
DPS1000	2…10 mbar	1 mbar
DPS2500	5…25 mbar	1.5 mbar

DVGW test certificate

EC type testing according to EC Gas Appliance Directive (EU/2016/426) and DIN EN 1854

Supplied accessories DPSA:

2 m silicone hose, 2 connection pieces with mounting screws,
2 self-tapping screws for mounting the housing,
3 screw terminals for the electrical connection

Dimensioned drawing (mm)

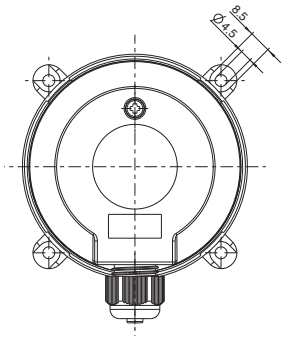

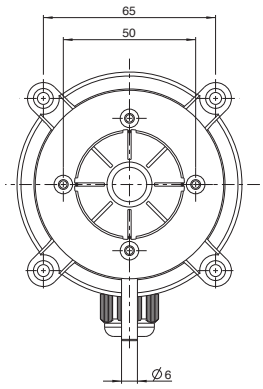

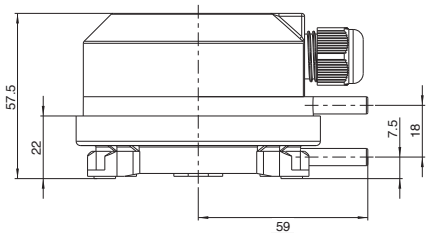

CE

DVGW
tested

Protection Class:
IP 54

Electronic pressure switches and Pressure transmitter

Type	Medium	Pressure range	Temperature range (Medium)	Directive for CE	Testing basis	Outputs	Comments	Page
Smart DCM **PSHR...**	Liquids and Gases	-1…40 bar	-20…+80°C	2004/108/EG	EN61326-1 EN61326-2-3	1 x Open Collector	Electronic pressure switch Parts in contact with medium: Stainless steel 1.4571	72 – 73
Smart DCM DIFF **PSHD....**	Liquids and Gases	0…20 bar	-20…+80°C	2004/108/EG	EN61326-1 EN61326-2-3	1 x Open Collector	Electronic differential pressure switch Parts in contact with medium: Stainless steel 1.4404	74 – 75
Smart Press PST **PST**	Liquids and Gases	-1…600 bar	-20…+100°C	2004/108/EG 2006/95/EG	EN61326-1 EN60730-1	2 x Open Collector 0/4…20 mA 0/2…10 V 2 x Open Collector 1 x change over contact	Electronic pressure switch Pressure transmitter, 3-wire Parts in contact with medium: (1.4571 and 1.4435 (< 250 bar), (1.4571 and 1.4542 (250 + 600 bar))	76 – 81
Smart SN **PTSR... PTHR...**	Liquids and Gases	-1…40 bar	-20…+80°C	2004/108/EG	EN61326-1 EN61326-2-3	0/4…20 mA 0/2…10 V	Microprocessor supported pressure transmitter 2- and 3-wire Parts in contact with medium: stainless steel 1.4571	86 – 87
Smart SN DIFF **PTHD... PTSD...**	Liquids and Gases	0…20 bar	-20…+80°C	2004/108/EG	EN61326-1 EN61326-2-3	0/4…20 mA 0/2…10 V	Microprocessor supported pressure transmitter 2- and 3-wire Parts in contact with medium: stainless steel 1.4404	88 – 89
PTI	Liquids	0…40 bar	-30…+125°C	2014/30/EU	EN61326-1	4…20 mA	Pressure transmitter 2-wire parts in contact with medium: 1.4305	90 – 91
PTU	Liquids	0…40 bar	-30…+125°C	2014/30/EU	EN61326-1	0…10 V	Pressure transmitter 2-wire parts in contact with medium: 1.4305	90 – 91
DTI.../ DTU...	Liquids and Gases	0...10 bar	-15...+100°C	2014/30/EU	EN61326-1 EN61326-2-3	4…20 mA 0…10 V	Differential pressure transmitter 2- and 3-wire Parts in contact with medium: 1.4571, 1.4435, 1.4305	92 - 93
DPTE	Air and non aggressive gases	-50...10.000 Pa -0,5...100 mbar	0….50°C	2004/108/EG	EN61326-1	4…20 mA 0…10 V	Differential pressure transmitter 2- and 3- wire Parts in contact with medium: ABS, POM	94
DPTA	Air and non aggressive gases	-25…50 Pa -0,25…0,5 mbar	0….50°C	2004/108/EG	EN61326-1	4…20 mA 0…10 V	Differential pressure transmitter with automatic re-zeroing, 3-wire, Parts in contact with medium: ABS, POM	95
DPTAQ8	Air and non aggressive gases	-50…1000 Pa -0,5…10 mbar	0….50°C	2004/108/EG	EN61326-1	4…20 mA 0…10 V	8-range differential pressure transmitter with automatic re-zeroing, 3-wire, Parts in contact with medium: ABS, POM	95

ELECTRONIC PRESSURE SWITCHES

With display and control panel

Smart DCM

Electronic pressure switches

The robust, microprocessor supported electronic pressure switches in the Smart DCM series from Honeywell FEMA measure relative pressures in ranges from -1 ...+1 bar and 0-40 bar They are particularly suitable for controlling system pressures in the fields of mechanical engineering, supply engineering, environmental technology and HVAC. The equipment can be installed directly in the pressure line using the G1/2" external thread. Entering switching points is easy with the generously proportioned keyboard and graphic display.

Technical data

Measuring ranges relative	-1… + 40 bar
Ambient temperature	–20…+70 °C
Storage temperature	–30…+80 °C
Medium temperature	–20…+80 °C
Relative humidity	0…95 % non condensing
Overall accuracy	0.5% of full scale
Weight	350 grams
Parts in contact with medium	Stainless steel (1.4571)
Process connection	Pressure gauge connection G1/2" external thread
Electrical connection Plug connection	5-pin M12x1
Protection class	II as per EN 61140 IP 65
Power supply	18...35 Vdc
EMC	as per EN 61326
Switching output	Open collector
Contact load	250 mA (protected against excess current)
Upper value (min.)	Supply -2 V
Lower value (max.)	GND + 0,5 V
Switching differential	SP and RP in the menu free choice
Warning output	Pin 2
Housing and cover	PA66 GF25

Functions

· Configuration of open collector switching output as:
- ❑ minimum pressure monitor,
- ❑ maximum pressure monitor,
- ❑ pressure window monitoring

· Configuration of switching contact as:
- ❑ normally closed
- ❑ normally open

· Setting the switching and reset point over the entire pressure range
· Switch on / off delay
· Simulation mode
· Devices can be easily configured by the customer

Smart DCM display functions

· Rotation of graphics display in 90° steps, possible by means of software.
· Current pressure display
· Switching state display
· Two colour background lighting for warning signals

Other features:

· Restore function
· Warning function for implausible switching points, sensor fault, overload and overheating
· Manual zero adjustment
· 4-digit code enables locking

Electrical connection:

· 5-pin M12x1 plug connector, Form A
· M12x1 connector included
· Middle pin don´t connect

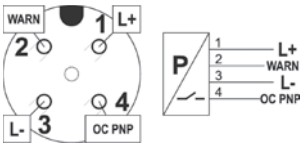

Note:

Cycle time: 100msec
Pressure surges shorter than the cycle time of 100 msec are not written in the peak values.
Remedy for pressure surges can afford a front mounted pressure surge reducer DMW.

Product Summary

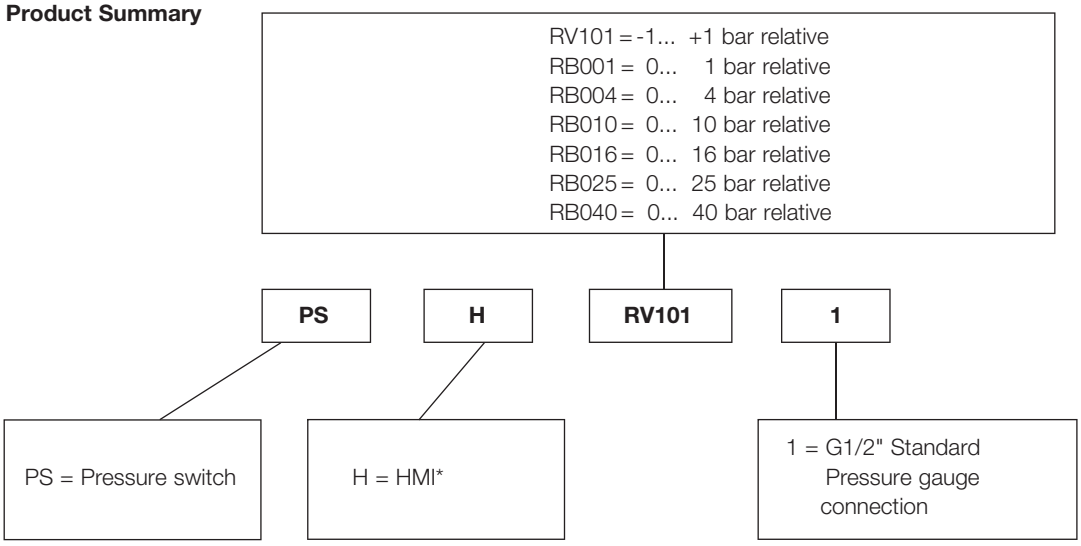

* HMI = **H**uman **M**achine **I**nterface = Digital display + Data input via buttons

Type	Pressure (in bar)	Max. permissible pressure (bar)
PSHRV1011	-1...+1	4
PSHRB0011	0...1	4
PSHRB0041	0...4	8
PSHRB0101	0...10	20
PSHRB0161	0...16	32
PSHRB0251	0...25	50
PSHRB0401	0...40	80

Dimensioned drawings (mm)

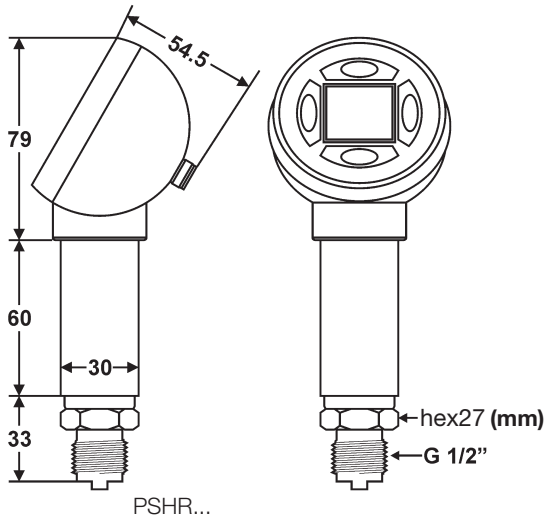

With display and control panel

Smart DCM DIFF

Electronic differential pressure switches

The microprocessor supported electronic differential pressure switches in the Smart DCM DIFF series from Honeywell FEMA measure differential pressures and relative pressures in 6 pressure stages from 0-100 mbar to 0-20 bar.

Electronic differential pressure switches are highly suitable for a wide variety of applications, including the accurate measurement, monitoring and control of differential pressures. The principal applications are in pump and filter monitoring.

Technical data

Measuring ranges	relative 0-100 mbar to 0-20 bar
Ambient temperature	–20…+70 °C
Storage temperature	–30…+80 °C
Medium temperature	–20…+80 °C
Relative humidity	0…95 % non condensing
Accuracy	1 % except PSHDM1002
Weight	450 g
Parts in contact with medium	Stainless steel 1.4404 (AISI 316 L)
Process connection	2x G1/4" internal thread
Electrical connection	5-pin M12x1 plug, "A"
Protection class	III as per EN 61140 (PELV)
Versions with HMI	IP65
Climate class	
Indoor	4K4H as per EN 60721-3-4
Outdoor	3K8H as per EN 60721-3-3
Mechanical stability	
Vibration	20g as per IEC 68-2-6 (up to 2000 Hz)
Mechanical shock	100g as per IEC 68-2-27
Power supply	18...35 Vdc, max. 30 mA
Open collector switching output	
Contact load	250 mA (protected against excess current)
Upper value (min.)	Supply - 2 V
Lower value (max.)	GND + 0.5 V
Response time	max. 300 ms
Hysteresis	SP and RP selectable via software
Housing and cover	PA66 GF25, Chemical resistance 4C4 as per EN 60721-3-4
Display screen cover	PMMA (plexiglas)
Membrane keyboard	polyester

Functions

· Configuration of open collector switching output as:
- ❑ minimum pressure monitor,
- ❑ maximum pressure monitor,
- ❑ pressure window monitoring

· Configuration of switching contact as:
- ❑ normally closed
- ❑ normally open

· Setting the switching and reset point over the entire pressure range
· Switch on / off delay
· Simulation mode
· Easily configurable through display and buttons

Smart DCM DIFF display functions

· Displays current pressure in bar, Pa, psi und %
· Display of switching state
· Two colour background lighting for warning signals
· Rotation of graphic display in 90° steps, possible by means of software

Other:

· Restore function
· Warning function for implausible switching points, sensor fault, overload and overheating
· Manual zero adjustment
· 4-digit code enables locking

Electrical connection:

· 5-pin M12x1 plug connector, Form A
· M12x1 connector included
· Middle pin do not connect

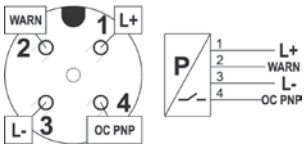

Dimensioned drawings (mm)

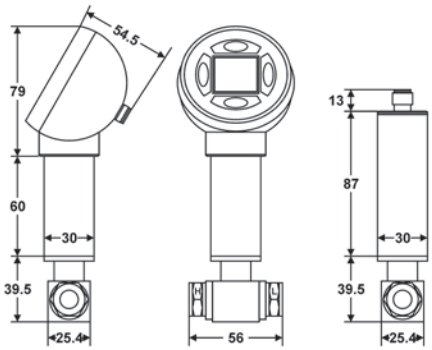

Note:

Cycle time: 100msec
Pressure surges shorter than the cycle time of 100 msec are not written in the peak values.
Remedy for pressure surges can afford a front mounted pressure surge reducer DMW.

CE

Protection Class:
IP 65

FEMA by Honeywell

Product Summary

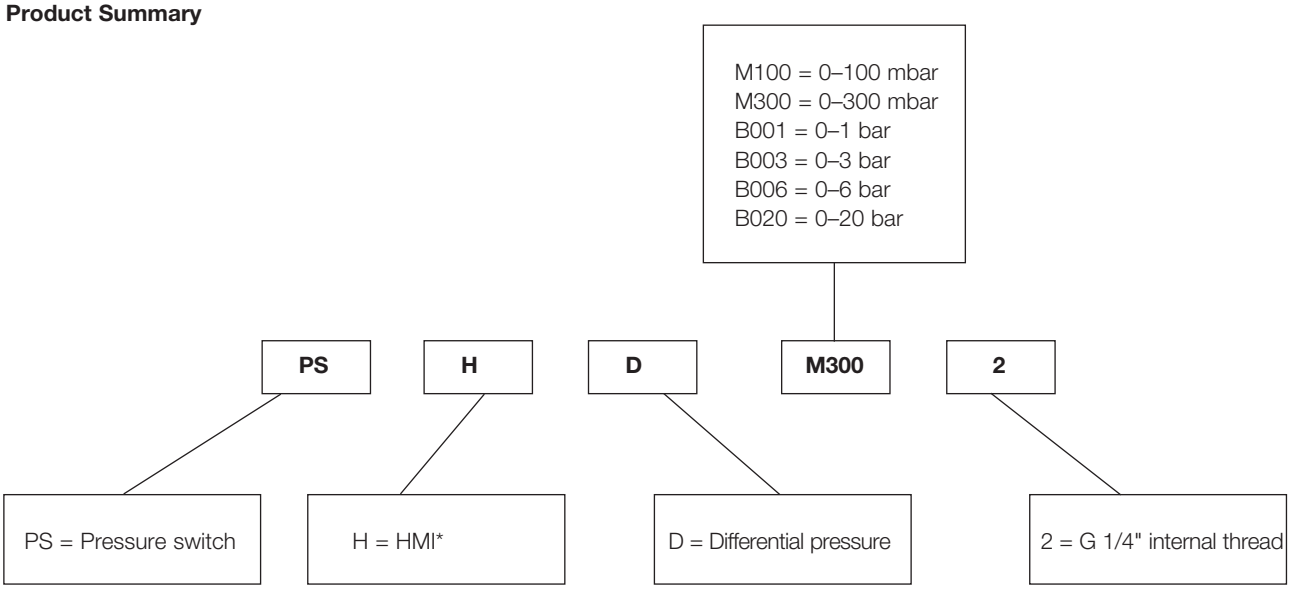

* HMI = **H**uman **M**achine **I**nterface = Digital display + Data input via buttons

Type	Measuring range (bar)	max. perm. differential pressure (bar)	Overpressure * (bar)	Bursting pressure** between "high" and "low" (bar)	max. perm. System pressure (bar)	max. perm. differential pressure between "low" and "high" (bar)	Bursting pressure** between "low" and "high" (bar)
PSHDM1002	0-0,100	0,2	> 0,2 ...< 0,4	≥ 0,4	70	< 0,4	≥ 0,4
PSHDM3002	0-0,300	0,6	> 0,6 ... < 1,2	≥ 1,2	70	< 1,2	≥ 1,2
PSHDB0012	0-1	2,0	> 2,0 ... < 4,0	≥ 4,0	70	< 4,0	≥ 4,0
PSHDB0032	0-3	6,0	> 6,0 ... < 12,0	≥12,0	70	< 8,0	≥ 8,0
PSHDB0062	0-6	12,0	> 12,0 ... < 24,0	≥ 24,0	70	< 8,0	≥ 8,0
PSHDB0202	0-20	40,0	> 40,0 ... < 80,0	≥ 80,0	70	< 8,0	≥ 8,0

Measuring range:
Calibrated measuring range of device. The switching and resetting points can be set within this pressure range. This pressure range is given in the product ordering code PSHD**M3002**, for example. Here **M300** means pressure range 0-300 mbar.

Maximum premissible differential pressure:
Maximum pressure difference that may be connected between the two connections "H" and "L" without knocking the sensor element out of adjustment or causing it long term damage.

Bursting pressure:
Above the stated bursting pressures, the sensors are subject to mechanical failure. This removes the security of separation between the "H" and "L" connections and the sensor housing may even rupture.

Maximum permissible system pressure:
System pressure that may be allowed to bear on both pressure connections without knocking the sensor element out of adjustment or causing it long term damage. Within these limits, the pressure may be allowed to reach the maximum permissible differential pressure on the overpressure side "H" without putting the sensors out of adjustment or causing them long term damage.

Attention:
According to intended use, the lower pressure needs to be connected to the "L" marked port and the higher pressure to "H" marked port. Interchange of both ports (high pressure at "L" port) may lead to damage of the differential pressure measurement cell.

Smart Press PST

Smart Press PST-R

Electronic pressure switches / pressure transmitters

Honeywell FEMA PST…-R series pressure switches are highly versatile, can be adjusted and configured in two modes and are used for fine adjustment and monitoring of system pressures in plant engineering, fluidics, process engineering and pneumatics, and for monitoring and control of pumps and compressors. They are all fitted with a WARNING system and have a standardized 20 mA warning output. The equipment is therefore also used in manufacturing lines in the automotive industry and in many areas of mechanical and special purpose engineering. With an overall accuracy of 0.5% of full scale, these pressure switches / transmitters are also suitable for measurement monitoring in many laboratory applications.

Technical data

Measuring ranges	–1… + 600 bar
Ambient temperature	–20…+60 °C
Storage temperature	–35…+80 °C
Medium temperature	–20…+100 °C
Relative humidity	0…95 % non condensing
Overall accuracy	≤ 0.5 % of full scale
Vacuum	Vacuum proof
Parts in contact with medium	1.4571 and 1.4542 (250 - 600 bar), 1.4571 and 1.4435 (< 250 bar and flush to the front)
Process connections	
Pressure gauge connection	G 1/2" external thread
Quasi-flush	G 3/4" external thread
Electrical connections	
PST...R	2 x 5-pin M 12 plug, as per DIN IEC 60947-5-2 (available as accessory) Additional 3-pin M 12 plug (available as accessory)
Protection class	II as per EN 60335-1 IP 65 as per EN 60529
Climate class	C as per DIN EN 60654
Power supply	14…36 VDC
EMC	as per EN 61326/A1
Outputs	
2 open collector Switching outputs	250 mA at 14...36 VDC, Configurable as high side/low side switching and as push/pull outputs
Swtiching differential	(SP and RP) selectable via software
Reaction time	30 ms
Relay outputs	
Permissible resistive load	250 VAC, 5 A,
Permissible inductive load	250 VAC, 0.8 A (200 VA)
Contact type	1 change over contact (1 x UM)
Service life	at least 250,000 switching cycles
Warning output	
Output configuration	Warning output on plug 2 max. 20 mA, 14...36 VDC
Transmitter output	
Voltage/current	0–10 V or 4–20 mA, configurable (also invertible) in expert mode
Housing and cover	Polybutylene terephthalate PBT-GF30, resistant to chemicals and stress cracking
Display screen cover	Polycarbonate PC
Weight	approx. 380 g

Functions

The 2 switching outputs can be configured as:
- Minimum pressure monitors, maximum pressure monitors, pressure window monitoring
- Configurable as normally closed or normally open, high side or low side switching and as a push / pull output
- Relay output assigned to channel 1 or 2 or to the warning output (in the case of PST…-R)

Configuration of the analog output:

- 0-10 V, 4-20 mA or 10-0 V and 20-4 mA
- Analog measuring range can be limited to a minimum of 50 % of the total measuring range
- Select pressure unit: bar, Pa or psi

Smart Press display functions:

- 4-digit digital display with bar graph for pressure trend, settings and set parameters
- 2 three-colour LEDs to show the switching state of the outputs, implausible settings and as a warning status indicator

Electrical pin connection:

- Two 5-pin M12 plug connections for power supply, switching outputs and analog output
- One 3-pin M12 plug connection for the relay output

Plus:

- Pressure peak filter
- Pressure simulation and switching simulation modes
- Restore function
- Warning function for implausible switching points, sensor fault, overload and overheating
- Manual zero adjustment

Type codes

PST…-R = Pressure switch + Transmitter + Relay

(M)250 = 0...250 mbar
(M)400 = 0...400 mbar
(M)600 = 0...600 mbar

001 = 0... 1 bar
(V)01 = -1… +1 bar
002 = 0… 1.6 bar
004 = 0… 4 bar
010 = 0… 10 bar
025 = 0… 25 bar
060 = 0… 60 bar
100 = 0…100 bar
250 = 0…250 bar
600 = 0…600 bar

G12S = **G 1/2"** Standard pressure gauge version
G34F = **G 3/4"** Flush to front pressure sensor

PST V 01 R G34F -R

V = Vacuum version
M = Millibar version

R = **Relative pressure sensor**
A = **Absolute pressure sensor**

-R = Relay output (potential free changeover contact)

	Type	Pressure in bar	Max. permissible pressure (bar)	Dimensioned drawing see page 81
Relative pressure	**PSTV01RG12S-R**	-1…+1	6	
	PSTM250RG12S-R	0 – 250 mbar	1	
	PSTM400RG12S-R	0 – 400 mbar	2	
	PSTM600RG12S-R	0 – 600 mbar	2	
	PST001RG12S-R	0 – 1 bar	6	
	PST002RG12S-R	0 – 1,6	6	
	PST004RG12S-R	0 – 4	12	
	PST010RG12S-R	0 – 10	30	
	PST025RG12S-R	0 – 25	75	30 +
	PST060RG12S-R	0 – 60	180	31
	PST100RG12S-R	0 – 100	300	
	PST250RG12S-R	0 – 250	500	
	PST600RG12S-R	0 – 600	1000	32
	PSTV01RG34F-R	-1…+1	6	
	PSTM250RG34F-R	0 – 250 mbar	1	
	PSTM400RG34F-R	0 – 400 mbar	2	
	PSTM600RG34F-R	0 – 600 mbar	2	
	PST001RG34F-R	0 – 1 bar	6	
	PST002RG34F-R	0 – 1,6	6	
	PST004RG34F-R	0 – 4	12	33
	PST010RG34F-R	0 – 10	30	
	PST025RG34F-R	0 – 25	75	
Absolute pressure	**PST002AG12S-R**	0 – 2	6	30 +
	PST010AG12S-R	0 – 10	30	31
	PST002AG34F-R	0 – 2	6	33
	PST010AG34F-R	0 – 10	30	

PST-R plug requirement (not included) please see page 78

- as transmitter	1 x ST12-5-A
- as switch (OC)	1 x ST12-5-A
- as transmitter + switch (OC)	2 x ST12-5-A
- as transmitter + relay	1 x ST12-5-A + 1 x ST12-4-A
- as switch (OC) + relay	1 x ST12-5-A + 1 x ST12-4-A
- as transmitter + switch (OC) + relay	2 x ST12-5-A + 1 x ST12-4-A

CE

Protection Class:
IP 65

Accessories (to be ordered separately)

Cable socket Type			
For output 1+2 Cable sockets are for connection of max. 0.75 mm² cross-section			
ST12-5-A	5-pin	A-coded	Right angle version
For output 3 (relay output)			
ST12-4-A	4-pin	B-coded	Right angle version
ST12-4-AK	4-pin	B-coded	Right angle version with 2m cable
ST12-4-GK	4-pin	B-coded	Straight version with 2m cable
Plug protection cap			
STA12			IP 65

Electrical connection

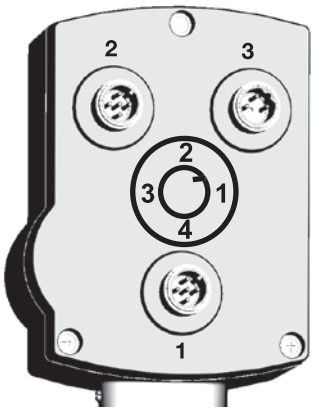

Electrical connection and contact assignment
Electrical connection is via M12 plugs on the back of the unit. Depending on the version, 3 (PST…-R) M12 connector plugs are available (not supplied with the unit).

Contact assignment on plug 1 (A-coded)
Pin 1: Supply voltage 14…36 VDC
Pin 2: OUT 2 (output 2) open collector output
Pin 3: 0 volt (ground)
Pin 4: OUT 1 (output 1) open collector output
Pin 5: Serial interface (locked for calibration)

Special characteristic of open collector outputs:
Depending on the design, the output voltage at open collector outputs can be up to 2.5 V lower than the applied supply voltage.
Example: Supply voltage 14 V… output voltage OUT 1 approx. 11.5 V.

Contact assignment on plug 2 (A-coded)
All versions of series PST…-R are also equipped with an A-coded M 12 plug.
Pin 1: Supply voltage 14…36 VDC
Pin 2: WARN (warning output max. 20 mA)
Pin 3: 0 V (ground)
Pin 4: Analogue output AOUT
Pin 5: Serial interface (for factory calibration only)
Units of the PST...-R series can be powered both via plug 1 and via plug 2. If the PST....-R is used purely as a transmitter, only one connection via plug 2 is needed, because the supply voltage can be connected here too (see "Contact assignment on plug 1").

Contact assignment on plug 3 (B-coded)
All versions of series PST…-R are equipped with a B-coded M 12 plug.
Pin 1: Common contact
Pin 2: normally closed contact
Pin 3: normally open contact

Contacting
ST12-4-AK and ST12-4-GK

Relais contact	colour	Contact
1	brown	common
2	white	NC
3	blue	NO
4	green/yellow	n. a.

NB – For IP65 special plug protection cap STA12 is required
Observance of IP65 water and dust proofing requires the secure sealing of electrical connections not closed with plugs.
The soft rubber dust caps fitted for shipping do not fulfil this requirement. A reliable seal can only be achieved by the **STA12** protection cap.

Switch outputs

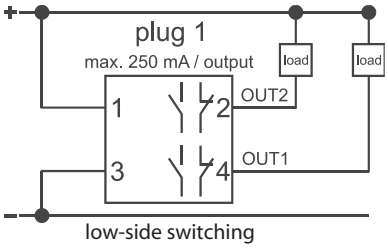

low-side switching

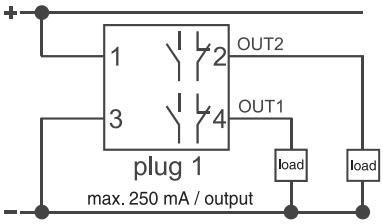

high-side switching

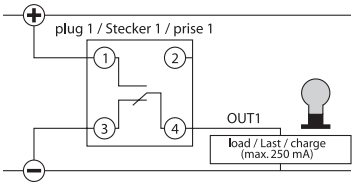

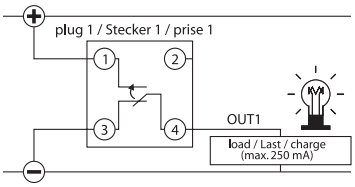

High side switching push/pull outputs

Switch output OUT1 and OUT2:
The switch outputs can be configured via the software (at expert level) both as normally closed / normally open, and as high-side and low-side switching.

- In **normally closed configuration**, the selected voltage potential (ground or supply voltage) occurs at the output in the **unswitched** state.
- In **normally open configuration**, the selected voltage potential (ground or supply voltage) occurs at the output in the **switched** state.
- In the **low side switching configuration**, the outputs switch the voltage potential 0 V (ground) with respect to a consumer connected to OUT1 or OUT2.
- In the **high side switching configuration**, the outputs switch the supply voltage potential (minus approx. 2V) with respect to a consumer connected to OUT1 or OUT2.

If the power supplies of the pressure switch and connected load are independent of one another, the following must be taken into account: The potential difference between OC output and ground and OC output and supply voltage must not exceed 36 VDC. If the unit is configured for low side switching, the external supply voltage must have the same ground reference as the unit itself. If the unit is defined as high side switching, the external supply voltage must be linked to the supply voltage of the unit. It is important to note that the voltage drop in the through-connected state can be as much as 2 V. The maximum permitted current at the OC is 250 mA per switch output (OUT1, OUT2). A maximum switching current of 250 mA may flow through each channel.

The switching channels are short circuit proof and they are monitored for current and temperature. Where current limiting is used and on overheating, both LEDs light up red (WARN function).
The freely configurable outputs can connect both the supply voltage (+ potential) itself and the ground (– potential) of the supply voltage to the output. If plus potential exists at the output, ground minus potential occurs after switching over.

If ground minus potential exists at the output, plus potential occurs after switching over.

Advantage: The output behaves like a mechanical changeover contact which emits either plus or minus potential. In other words, the open output is never electrically undefined, as is the case with an open collector output. Pull-up resistors are therefore unnecessary.

Analogue output and relay output

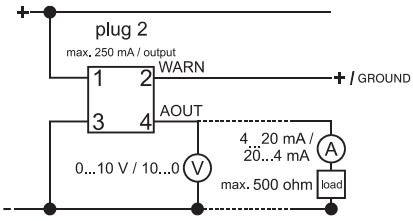

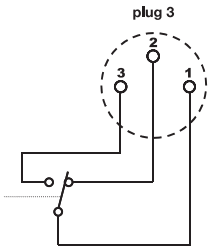

Analogue output AOUT:
The analogue output (AOUT) is available in versions PST…-R. In expert mode it is configurable both as a 0-10 V/10-0 V, and as a 4–20 mA/20–4 mA output. The unit is supplied with the output configured for 0-10 V. The input impedance of the connected consumer **must not exceed 500 ohms**.

Relay output REL:
The relay output is available in version PST…-R. In expert mode the analogue output can be coupled via the software with output 1 (OUT1) and output 2 (OUT2), and with the WARN function. This means that the user can choose a potential free output for these 3 important functions.
The change over contact of the relay is designed for a maximum resistive load of 4 A and an inductive load of 200 VA. At the lower end the 5 µ gold plated silver contacts are designed for a minimum load of 50 mW. (5 V at 10 mA).
It should always be remembered that after a one off maximum load, use at minimum load is no longer possible.

Indicators and display

The indicators in the display have the following meanings:

ATT	Attenuation (for setting a filter)
EXPERT	Expert mode (allows the user to configure the unit, e.g. as maximum detector or minimum detector or for window monitoring)
WARN	Warning function / alarm
WIN	Window monitoring (for monitoring a pressure window to detect exceeding or falling below a selected pressure window)
OUT1	Switch output OC 1
OUT2	Switch output OC 2
SP	Switching point
RP	Reset point Switch contact configured as normally open Switch contact configured as normally closed
AOUT	Analogue output (if the current pressure is outside the currently set range, the "AOUT" symbol is not visible).
ZERO	Zero point display for the analogue output or display symbol if output 1 or output 2 defined as low side switching (unit switches power supply plus to the output). Combined with "FSO" in the switch configuration menu as indicator for the push / pull function.
FSO	Upper limit of the selected analogue display range or display symbol if output 1 or 2 defined as high-side switching. (unit switches power supply minus to the output). Combined with "ZERO" in the switch configuration menu as indicator for the push / pull function.
INV	Inversion of the analogue signal (i.e. "INV" appears if, instead of a standard analogue signal 0…10 V or 4…20 mA, the analogue signal output is set to 10…0 V or 20…4 mA).

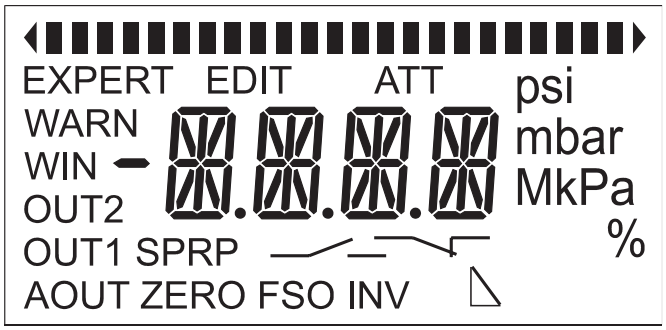

Display

The unit has a 4-digit digital display with 3 decimal points and a minus sign. There are also other symbols for the different settings and configurations.
The display also includes a **bar graph**. This is at the top of the display and consists of a row of separately addressable individual segments with arrow symbols at either end.
As soon as the unit is powered up, all symbols appear on the display for 1 second as a test and the two LEDs light up briefly. The unit then goes into display mode, showing the current system pressure and the selected unit (bar, PSI or Pa). In addition the pressure trend (falling or rising) is indicated by an arrow at the left (falling) or right (rising) end. The "AOUT" indicator tells the user that the pressure is currently in the predefined pressure range for the analogue signal.

Meaning of LED colours

LED-Status		Meaning	
LED 1 lit	**LED 2 lit**	**Output 1 Status**	**Output 2 Status**
green	green	inactive	inactive
green	orange	inactive	active
orange	green	active	inactive
orange	orange	active	active
red	red	SP / RP implausible	
red	red	error	

Status LEDs

The current status of the switch outputs is displayed by 2 LEDs located beneath the display (LED 1 and LED 2). The two 3 colour LEDs indicate the switching status of the corresponding output and the warning function.

- Orange: the output is **ACTIVE**
- Green: the output is **INACTIVE** (if defined as WARN output, likewise INACTIVE)
- During input of the switching points, only the LED of the switching channel currently being modified is active. When switching points are entered, if an implausible entry is made for the maximum detector, e. g. SP < RP, the relevant channel LED lights up red.
- Both status LEDs light up red as soon as a WARN state occurs (e. g. electronics faulty and unit overheating).

Warning with both LEDs RED and WARN output active

	Display indication
- on sensor failure	-***1
- under voltage	-**1*
- under temperature	-*1**
- over temperature	-*2**

	Display indication
- overload output 1	-1***
- overload output 2	-2***
- overload output 1 and 2	-3***

Dimensioned drawings (mm)

30

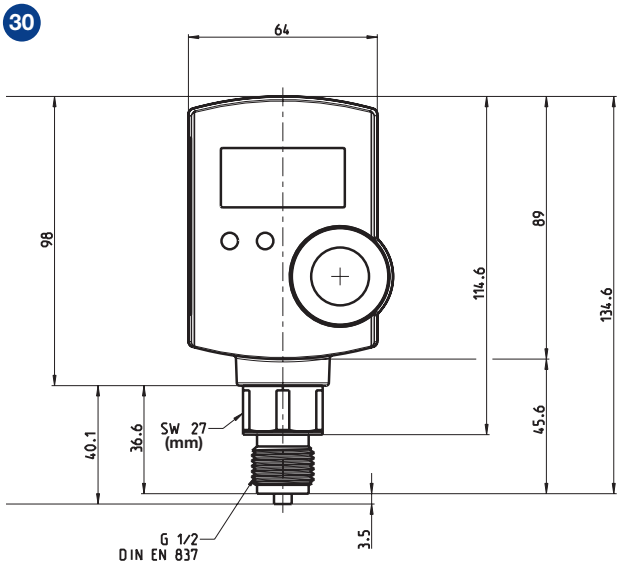

31

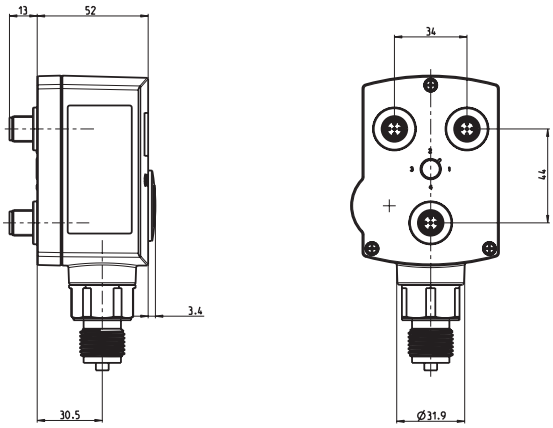

32

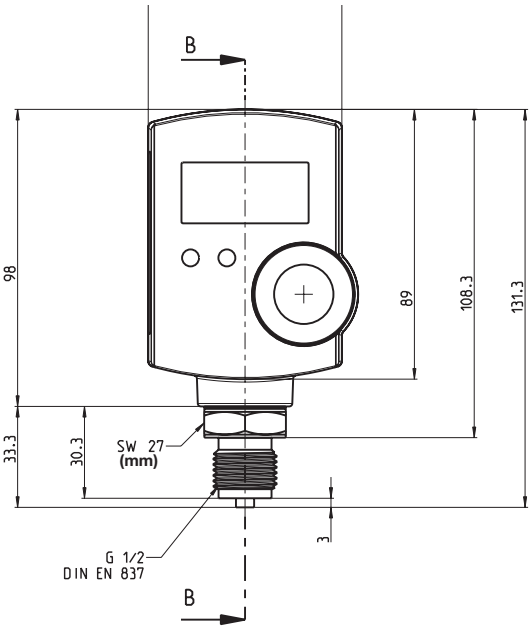

33

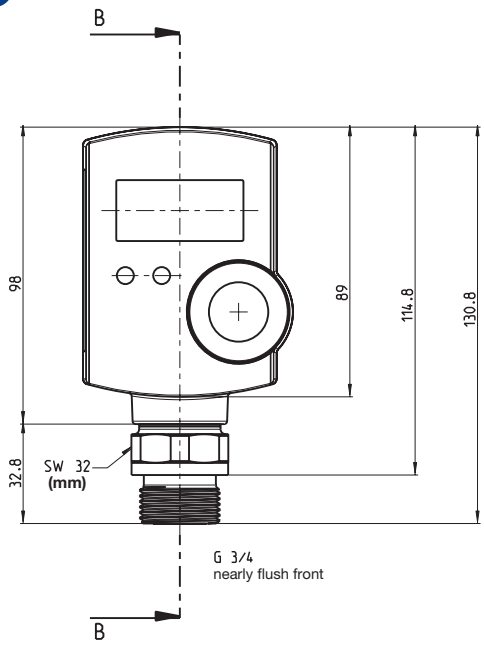

Specifications

Pressure switches

Type series	Pressure switches
PSH...	Electronic pressure switch for liquid and gaseous media measuring relative pressures in ranges from -1 ... +1 bar and 0–40 bar, Protection Class IP65, with HMI
PSHD...	Electronic diffential pressure switches for liquids and gases measuring differential pressures and relativ pressures in 6 pressure stages from 0–100 mbar to 0–20 bar, protection class IP65, with HMI
PST…-R	Electronic pressure switches for liquid and gaseous media with 2 open collector switching outputs, analogue output and potential free relay output, power supply 14…36V DC, type of protection IP 65, switching points freely adjustable from … to … bar. Freely programmable analogue output 4–20 mA or 0–10 V (may also be inverted), process connection G 3/4'' or G 1/2'', absolute or relative pressure versions Type: PST…-R
DCM…	Pressure switch with plug connection to DIN EN175301. Switch housing made of diecast aluminium GD Al Si 12, protection class IP 54. Range of adjustment from ... to ... bar / mbar. Switching differential adjustable / not adjustable. Pressure connection G 1/2, external and G 1/4, internal Type: DCM…
DNM…/ VNM…	Pressure switch with plug connection to DIN EN175301. Sensor housing made of stainless steel 1.4104. Switch housing made of diecast aluminium GD Al Si 12, protection class IP 54. Range of adjustment from ... to ... bar / bar. Switching differential adjustable / not adjustable. Pressure connection G 1/2, external and G 1/4, inter nal Type: DNM...
DNS…/ VNS…	Pressure switch with plug connection to DIN EN175301. Sensor made entirely of stainless steel 1.4571. Switch housing made of die cast aluminium GD Al Si 12, protection class IP 54. Range of adjustment from ... to ... bar / bar. Switching differential adjustable / not adjustable. Pressure connection G 1/2, external and G 1/4, inter nal Type: DNS...,VNS...
DNS...351/ VNS...351	Pressure switch with terminal connection. Sensor made entirely of stainless steel 1.4571. Switch housing made of diecast aluminium GD Al Si 12, plastic coated housing, protection class IP 65. Range of adjustment from ... to ... bar / bar. Switching differential adjustable / not adjustable. Pressure connection G 1/2, external and G 1/4, internal Type: DNS…, VNS…
DDCM252… DDCM6002	Differential pressure switch with plug connection to DIN EN175301. Sensor made of aluminium, measuring diaphragm of Perbunan. Pressure connection G 1/4, internal, switch housing made of die cast aluminium GD Al Si 12, protection class IP 54. Range of adjustment from …to…bar / bar Type DDCM...
DDCM1… DDCM16	Differential pressure switch with plug connection to DIN EN175301 Sensor made of stainless steel 1.4104 and 1.4571. Pressure connections G 1/4, internal. Switch housing made of die cast aluminium GD Al Si 12, protection class IP 54. Range of adjustment from …to …bar / bar Type: DDCM…Type series
DWAM…/ DWAMV…	Pressure monitor "of special construction" for maximum pressure monitoring with self monitoring sensor (safety sensor). Tested according to VdTÜV Memorandum "Pressure 100". Switch housing made of die cast aluminium GD Al Si 12, plug connection to DIN EN175301, protection class IP 54. Range of adjustment from ... to ... bar / bar. Switching differential adjustable / not adjustable. Pressure connection G 1/2, external and G 1/4, internal Type: DWAM…
SDBAM…	Pressure limiter "of special construction" for maximum pressure monitoring. With internal interlock (reclosing lockout) with self monitoring sensor (safety sensor), tested according to VdTÜV Memorandum "Pressure 100". Switch housing made of die cast aluminium GD Al Si 12, plug connection to DIN EN175301, protection class IP 54. Range of adjustment from ... to ... bar / mbar. Pressure connection G 1/2, external and G 1/4, internal Type: SDBAM…
DWR…/ DWR…203	Pressure monitor "of special construction" for maximum and minimum pressure monitoring. Tested according to VdTÜV Memorandum "Pressure 100" and EN. Switch housing made of die cast aluminium GD Al Si 12, plug connection to DIN EN175301, protection class IP 54. Range of adjustment from ... to ... bar / bar. Switching differential adjustable / not adjustable. Pressure connection G 1/2, external and G 1/4, internal Type: DWR…

Type series	Pressure switches
DWR…205/ DWR…206	Pressure limiter "of special construction" for maximum pressure (205) or minimum pressure monitoring (206). With locking of switching state (reclosing lockout). Tested according to VdTÜV Memorandum "Pressure 100"and DIN EN175301. Switch housing made of die cast aluminium GD Al Si 12, plug connection to DIN EN175301, protection class IP 54. Range of adjustment from ... to ... bar / bar. Pressure connection G 1/2, external and G 1/4, internal Type: DWR…
DGM…	Pressure monitor for gas with plug connection to DIN EN175301. DVGW-tested according to DIN EN1854. Sensor casing of Cu/Zn/ high grade steel 1.4104. Switch housing of die cast aluminium GD Al Si 12, plug connection to DIN EN175301, protection class IP 54. Range of adjustment from ... to ... bar / bar. Switching differential not adjustable. Pressure connection G 1/2, external and G 1/4, internal Type: DGM…
DWAM…576	Pressure monitor "of special construction" for maximum pressure monitoring. With self monitoring sensor (safety sensor), positive opening contacts (gold plated). Resistor combination for wire break and short circuit monitoring. Tested according to VdTÜV Memorandum "Pressure 100". Switch housing made of die cast aluminium GD Al Si 12, protection class IP 65. Range of adjustment from ... to ... bar / bar. Pressure connection G 1/2, external and G 1/4, internal Type: DWAM…576
FD16 –326	Pressure monitor "of special construction" for maximum pressure monitoring in liquid gas systems with self monitoring sensor (safety sensor). Resistor combination for wire break and short circuit monitoring. TÜV tested according to VdTÜV Memorandum "Pressure 100" and DIN EN764-7. Explosion protection: Ex-i. Switch housing made of GD Al Si 12, protection class IP 65. Adjustable from 3 to 16 bar. Pressure connection G 1/2, external and G 1/4, internal Type: FD16 –326
FD16 –327	Pressure limiter "of special construction" for maximum pressure monitoring in liquid gas systems with self monitoring sensor (safety sensor). Switching state interlock (reclosing lockout). Resistor combination for wire break and short circuit monitoring. TÜV tested according to VdTÜV Memorandum "Pressure 100" and DIN EN764-7, Part 4. Explosion protection: Ex-i. Switch housing made of GD Al Si 12, protection class IP 65. Adjustable from 3 to 16 bar. Pressure connection G 1/2, external and G 1/4, internal Type: FD16-327

The specifications refer to the listed normal versions of the pressure switches. In the case of Ex-versions or devices with additional functions, the texts must be supplemented or amended accordingly.

PRESSURE TRANSMITTERS

FEMA
by Honeywell

Liquids and gases

Smart SN

Smart SN

Pressure transmitters

The robust, microprocessor supported electronic pressure sensors in the Smart SN series from Honeywell FEMA measure relative pressures in ranges from -1 ... +1 bar and 0-40 bar. The Smart SN series transmitters are especially well suited to the measurement and monitoring of system pressures. The graphic display can be rotated in 90° steps and provides reliable readings for the current local pressure and output signal. A generously proportioned keypad ensures the Smart SN transmitter version is simple to configure. The equipment can be installed directly in the pressure line using the G1/2" external thread.

➔ p. 86 – 87

Liquids and gases

Smart SN DIFF

Smart SN DIFF

Differential pressure transmitters

The microprocessor supported electronic differential pressure sensors in the and Smart SN DIFF series from Honeywell FEMA measure differential pressures and relative pressures in 6 pressure ranges from 0-100 mbar to 0-20 bar. Electronic differential pressure switches and differential pressure transmitters are highly suitable for a wide variety of applications, including the more accurate measurement, monitoring and control of differential pressures. The principal applications are in pump and filter monitoring.

➔ p. 88 – 89

Liquids and gases

Smart Press PST

Smart Press PST-R

Electronic pressure switches / transmitters

Honeywell FEMA PST...-R series pressure switches/transmitters are highly versatile, can be adjusted and configured in two modes and are used for the fine adjustment and monitoring of system pressures in plant engineering, fluidics, process engineering and pneumatics, and for the monitoring and control of pumps and compressors. They are all fitted with a WARNING system and have a standardized 20 mA warning output. The equipment is therefore also used in manufacturing lines in the automotive industry and in many areas of mechanical and special purpose engineering. With an overall accuracy of 0.5% of full scale, these pressure switches / transmitters are also suitable for measurement monitoring in many laboratory applications.

➔ p. 76 – 81

Liquids and gases

PTI/PTU

PTI/PTU

Pressure transmitters

The PTI (2-wire) and PTU (3-wire) pressure transmitters are suitable for measuring the relative pressure in liquid and gaseous media. The parameter "pressure" is converted into an analog current signal (PTI) or voltage signal (PTU).
Typical areas of application include: Compressors, Refrigeration and HVAC/R.

➔ p. 90 – 91

Liquids and gases

DTI/DTU

DTI/DTU

Differential pressure transmitters

The differential pressure transmitters DTI (2-wire) and DTU (3-wire) operate according to the piezo-resistive measuring principle. The measurement cell is welded into a seal-less stainless steel measurement chamber. The device is powered with 10…30 VDC and has a 4…20 mA output.
Typical areas of application include: Compressors, Refrigeration and HVAC/R.

➔ p. 92 – 93

Ventilation and air conditioning systems

DPTE

DPTE und DPTAQ

Differential pressure transmitter, piezo-resistive

The proven differential pressure transmitter series DPTM have been thoroughly revised. In particular, the electrical characteristic were optimized to the various sensor interfaces of heating controllers. Thus now, without exception and without converter all sensor inputs of the various Honeywell controller families with a 0-10V or 4-20mA signal can be controlled.
New products are added:
· DPTAQ (D) with 8 measuring ranges and automatic re-zeroing
· DPTA25 (D) with the smallest measuring range 0…25 Pa and automatic re-zeroing

Differential pressure transmitters are suitable for the monitoring of gaseous, non aggressive and non combustible media. Possible applications are:
· Air conditioning and ventilation (HVAC)
· Environmental protection
· Monitoring of ventilation flaps
· Pressure monitoring in clean rooms
· Building automation
· Filter and blower monitoring
· Level control (air bubbling syst)

➔ p. 92 – 93

Without display

With display and control panel

Smart SN

Microprocessor supported pressure transducers

The robust, microprocessor supported electronic pressure transducers in the Smart SN series from Honeywell FEMA measure relative pressures in ranges from -1 …+1 bar and 0-40 bar. They are particularly suitable for use as pressure sensors in the fields of mechanical engineering, supply engineering, environmental technology and HVAC. The equipment can be installed directly in the pressure line using the G1/2" external thread. Entering switching points is easy with the generously proportioned keyboard and graphic display. 2- and 3-wire versions are available, as are versions for use with alternating current.

*** All 2-wire versions according IEC 61508 (SIL2)**

Technical data

Measurement ranges	
relative	-1… + 40 bar
Ambient temperature	
Versions without HMI	–20…+80 °C
Versions with HMI	–20…+70 °C
Storage temperature	
Versions without HMI	–40…+80 °C
Versions with HMI	–30…+80 °C
Medium temperature	–20…+70 °C
Relative atmospheric humidity	0…95 % non-condensing
Overall accuracy	0.5% of end value
Weight	
Versions without HMI	300 grams
Versions with HMI	350 grams
Parts in contact with medium	Stainless steel (1.4571)
Process connection	
Pressure gauge connection	G1/2" external thread
Electrical connection	
Plug connection	5-pin M12x1
Protection class	II as per EN 61010
Versions without HMI	IP67
Versions with HMI	IP65
Power supply	
2-wire	18...35 Vdc
3-wire	24 Vac/dc +10/-20
EMC	according to EN 61326
Mechanical stability	
Vibration	20g as per IEC 68-2-6 (up to 2000 Hz)
Mechanical shock	100g as per IEC 68-2-27
Transmitter output (analog)	
Current	0/4…20 mA, max. 500 Ohm
Voltage	0/2...10 V, min. 15 kOhm configurable (also invertible)
Housing and cover	PA66 GF25

Functions

· Microprocessor supported 2- and 3-wire pressure sensors
· Scalable up to 50% of the nominal pressure range

Configuration of the analog output:

· 0-10 V, 2-10 V, 0-20 mA and 4-20 mA
· Select pressure unit: bar, Pa or psi

Smart SN display functions

· Current pressure display
· Current analog output display (voltage or power)
· WARNING - Display with visible error codes
· Rotation of graphics display in 90° steps, possible by means of software

Other features:

· Restore function
· Warning function for sensor fault, overload and overheating
· Manual zero adjustment
· 4-digit code enables locking

Electrical connection:

· 5-pin M12x1 plug connector, Form A
· M12x1 connector included

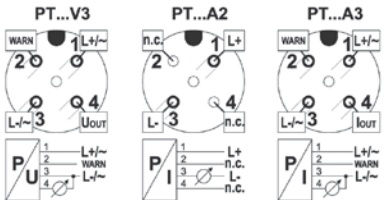

Dimensioned drawings (mm)

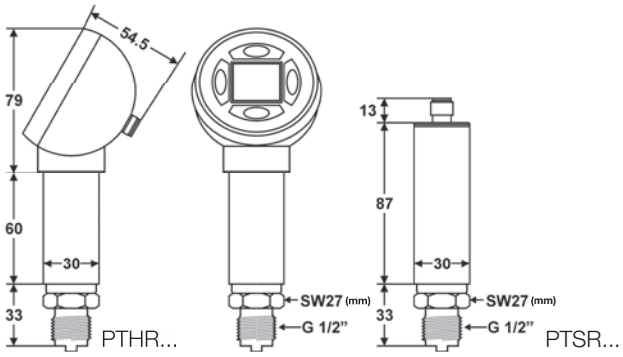

Note:
Cycle time: 100msec
Pressure surges shorter than the cycle time of 100 msec are not written in the peak values.
Remedy for pressure surges can afford a front mounted pressure surge reducer DMW.

Protection Class:
IP 67 / IP 65

Product Summary

RV101 = -1...+1 bar relative
RB001 = 0–1 bar relative
RB004 = 0–4 bar relative
RB010 = 0–10 bar relative
RB016 = 0–16 bar relative
RB025 = 0–25 bar relative
RB040 = 0–40 bar relative

PT	S	RV101	1	A2
PT = Pressure transmitter	H = HMI* S = Standard		1 = G1/2" Standard Pressure gauge connection	A2 = 4...20 mA (2-wire) A3 = 4...20 mA (3-wire) V3 = 0...10 V (3-wire)

* HMI = **H**uman **M**achine **I**nterface = Digital display + Data input via buttons

2-wire

Type	Pressure (bar)	Max. permissible pressure (bar)	Type
PTSRV1011A2	-1...+1	4	**PTHRV1011A2**
PTSRB0011A2	0...1	4	**PTHRB0011A2**
PTSRB0041A2	0...4	8	**PTHRB0041A2**
PTSRB0101A2	0...10	20	**PTHRB0101A2**
PTSRB0161A2	0...16	32	**PTHRB0161A2**
PTSRB0251A2	0...25	50	**PTHRB0251A2**
PTSRB0401A2	0...40	80	**PTHRB0401A2**

Safety parameters (IEC61508-2)

Type	DC	PDF (T_{proof} = 1 years)	PDF (T_{proof} = 5 years)	PDF (T_{proof} = 10 years)	SIL-Level
PTSR.....A2	0%	1,32E-04	6,61E-04	1,32E-03	**SIL2**
PTHR.....A2	0%	1,32E-04	6,61E-04	1,32E-03	**SIL2**

3-wire

Type	Pressure (bar)	Max. permissible pressure (bar)	Type
PTSRV1011V3	-1...+1	4	**PTHRV1011V3**
PTSRB0011V3	0...1	4	**PTHRB0011V3**
PTSRB0041V3	0...4	8	**PTHRB0041V3**
PTSRB0101V3	0...10	20	**PTHRB0101V3**
PTSRB0161V3	0...16	32	**PTHRB0161V3**
PTSRB0251V3	0...25	50	**PTHRB0251V3**
PTSRB0401V3	0...40	80	**PTHRB0401V3**
PTSRV1011A3	-1...+1	4	
PTSRB0011A3	0...1	4	
PTSRB0041A3	0...4	8	
PTSRB0101A3	0...10	20	
PTSRB0161A3	0...16	32	
PTSRB0251A3	0...25	50	
PTSRB0401A3	0...40	80	

Through the display of the pressure transmitter PTH...V3 the analogue output is configurable: 0/2...10V or 0/4...20 mA.

Protection Class:
IP 67 / IP 65

With display and control panel

Smart SN DIFF

Microprocessor-supported differential pressure transducers

The microprocessor supported differential pressure transmitters in the Smart SN DIFF series from Honeywell FEMA measure differential pressures and relative pressures in 6 pressure ranges from 0-100 mbar to 0-20 bar.

Differential pressure transmitters are highly suitable for a wide variety of applications, including the accurate measurement, monitoring and control of differential pressures. The principal applications are in pump and filter monitoring.

Technical data

Measuring ranges	0-250 mbar
relative	to 0-25 bar
Ambient temperature	
Versions without HMI	–20…+80°C
Versions with HMI	–20…+70°C
Storage temperature	
Versions without HMI	–40…+100°C
Versions with HMI	–30…+80°C
Medium temperature	–20…+70°C
Relative atmospheric humidity	0…95% non-condensing
Accuracy	1%, except PTHDM 1002 ...
Weight	
Versions without HMI	350 grams
Versions with HMI	450 grams
Parts in contact with medium	Stainless steel 1.4404 (AISI 316L)
Process connection	2x G1/4" internal thread
Electrical connection	5-pin M12x1 plug, "A"
Protection class	III to EN 61140 (SELV)
Versions without HMI	IP67 to EN 60529-2
Versions with HMI	IP65 to EN 60529-2
EMC	according to EN 61326
Climate class	
Indoor	4K4H to EN 60721-3-4
Outdoor	3K8H to EN 60721-3-3
Power supply	
2-wire	18...35 Vdc
3-wire	24 Vdc ± 20 %, max. 50 mA
EMC	according to EN 61326
Mechanical stability	
Vibration	20g as per IEC 68-2-6 (up to 2000 Hz)
Mechanical shock	100g as per IEC 68-2-27

Functions

· Microprocessor supported 2- and 3-wire pressure sensors
· Scalable up to 50% of the nominal pressure range

Configuration of the analog output:

· 0-10 V, 2-10 V, 0-20 mA, 4-20 mA
· Select pressure unit: bar, Pascal or PSI

Smart SN display functions

· Displays current differential pressure in bar, Pa, psi and %
· Current analog output display (voltage or power)
· WARNING - Display with visible error codes
· Rotation of graphics display in 90° steps, possible by means of software

Electrical connection:

· 5-pin M12x1 plug connector, Form A
· M12x1 connector included

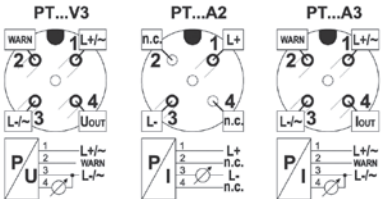

Other:

· Restore function
· Warning function for sensor fault, overload and overheating
· Manual zero adjustment
· 4-digit code enables locking

Dimensioned drawings (mm)

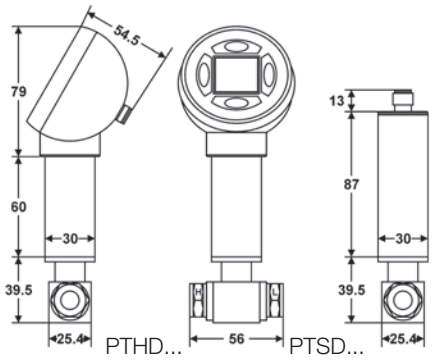

Note:
Cycle time: 100msec
Pressure surges shorter than the cycle time of 100 msec are not written in the peak values.
Remedy for pressure surges can afford a front mounted pressure surge reducer DMW.

Product Summary

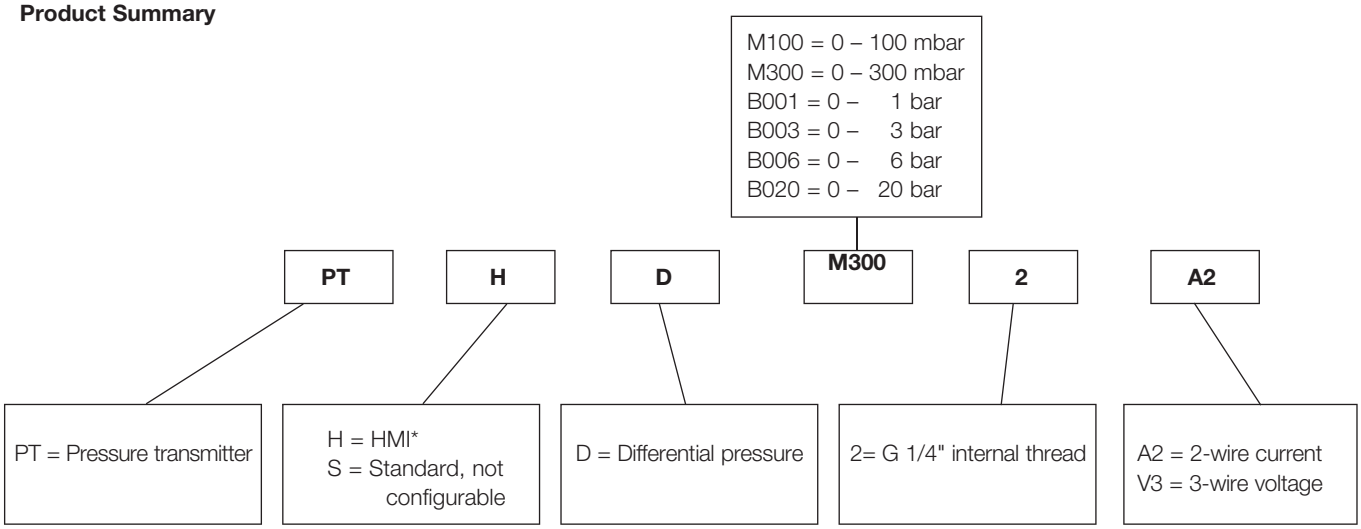

* HMI = **H**uman **M**achine **I**nterface = Digital display + Data input via buttons

2-wire

Type	Measuring range (bar)	max. perm. differential pressure (bar)	Overpressure * (bar)	Bursting pressure** between "high" and "low" (bar)	max. perm. System pressure (bar)	max. perm. differential pressure between "low" and "high" (bar)	Bursting pressure** between "low" and "high" (bar)
PTHDM1002A2	0-0,100	0,2	> 0,2 ...< 0,4	≥ 0,4	70	< 0,4	≥ 0,4
PTHDM3002A2	0-0,300	0,6	> 0,6 ... < 1,2	≥ 1,2	70	< 1,2	≥ 1,2
PTHDB0012A2	0-1	2,0	> 2,0 ... < 4,0	≥ 4,0	70	< 4,0	≥ 4,0
PTHDB0032A2	0-3	6,0	> 6,0 ... < 12,0	≥12,0	70	< 8,0	≥ 8,0
PTHDB0062A2	0-6	12,0	> 12,0 ... < 24,0	≥ 24,0	70	< 8,0	≥ 8,0
PTHDB0202A2	0-20	40,0	> 40,0 ... < 80,0	≥ 80,0	70	< 8,0	≥ 8,0

3-wire

Type	Measuring range (bar)	max. perm. differential pressure (bar)	Overpressure * (bar)	Bursting pressure** between "high" and "low" (bar)	max. perm. System pressure (bar)	max. perm. differential pressure between "low" and "high" (bar)	Bursting pressure** between "low" and "high" (bar)	Type with digital display
PTSDM1002V3	0-0,100	0,2	> 0,2 ...< 0,4	≥ 0,4	70	< 0,4	≥ 0,4	**PTHDM1002V3**
PTSDM3002V3	0-0,300	0,6	> 0,6 ... < 1,2	≥ 1,2	70	< 1,2	≥ 1,2	**PTHDM3002V3**
PTSDB0012V3	0-1	2,0	> 2,0 ... < 4,0	≥ 4,0	70	< 4,0	≥ 4,0	**PTHDB0012V3**
PTSDB0032V3	0-3	6,0	> 6,0 ... < 12,0	≥12,0	70	< 8,0	≥ 8,0	**PTHDB0032V3**
PTSDB0062V3	0-6	12,0	> 12,0 ... < 24,0	≥ 24,0	70	< 8,0	≥ 8,0	**PTHDB0062V3**
PTSDB0202V3	0-20	40,0	> 40,0 ... < 80,0	≥ 80,0	70	< 8,0	≥ 8,0	**PTHDB0202V3**

** Transmitter without HMI (PTSD…) only are available with voltage output
Through the display of the pressure transmitter PTH...V3 the analogue output is configurable: 0/2...10V or 0/4...20 mA.

Measuring range:
Calibrated measuring range of device. The switching and resetting points can be set within this pressure range.
This pressure range is specified in the product ordering code. PTHD**B001**2. Here **B001** means pressure range 0-1 bar.

Maximum permissible differential pressure:
Maximum pressure difference that may be connected between the two connections "H" and "L" without knocking the sensor element out of adjustment or causing it long-term damage.

Bursting pressure
Above the stated bursting pressures the sensors are subject to mechanical failure. This removes the security of separation between the "H" and "L" connections and the sensor housing may even rupture.

Maximum permissible system pressure:
System pressure that may be allowed to bear on both pressure connections without knocking the sensor element out of adjustment or causing it long term damage. In addition the pressure may be allowed to reach the maximum permissible differential pressure on the pressure side "H" without putting the sensor out of adjustment or causing long term damage to it.

Attention:
According to intended use, the lower pressure needs to be connected to the "L" marked port and the higher pressure to "H" marked port. Interchange of both ports (high pressure at "L" port) may lead to damage of the differential pressure measurement cell.

PTI/PTU

PTI/PTU

Pressure transmitters

The PTI (2-wire) and PTU (3-wire) Pressure Transmitters are suitable for measuring the relative pressures in liquid and gaseous media. The parameter "pressure" is converted into an analog current signal (PTI) or voltage signal (PTU). Typical areas of application include: Compressors, Refrigeration and HVAC/R

Technical data

Measurement range relative	
PTI (2-wire)	0 … 40 bar
PTU (3-wire)	0 … 16 bar
Temperature	
Operating	-20…+85 °C
Medium	-30…+125 °C
Storage	-40…+125 °C
Zero-point deviation	≤ 0.3% of FFS
Thermal hysteresis	≤ ±0.8% of FFS
Char. curve deviation	≤ ±0.5% of FFS
Hysteresis	≤ ±0.2% of FFS
Reproduceability	≤ 0.1% of FFS
In contact with medium	Stainless steel 1.4305; sensor: Al_2O_3 (96%); seal: FKM (Viton)
Housing	Stainless steel 1.4305
Pressure connection	G1/2" as per EN 837-1
Elect. connection	Plug connector as per DIN 175301, Form A, wire cross-section max. 1.5 mm²
Mounting orientation	As desired
EMC	According to EN 61326
Protection rating	IP65
Voltage supply	
PTI (2-Wire)	10...30 VDC
PTU (3-Wire)	24 VAC/DC ±10%
Output signal:	
PTI (2-Wire)	4...20 mA
PTU (3-Wire)	0...10 V
Mechanical vibrations	Max. 20 g at 15…2000 Hz (as per DIN IEC 68-2-6)
Mechanical shock	Max. 100 g / 1 ms (as per DIN IEC 68-2-27)
Weight	100 g
Incl. in delivery	Pressure sensor, incl. plug connector and these instructions in individual packaging

Electrical connection

PTI

Connection		plug connector as per DIN 175301, Form A	
Voltage supply 10…30 VDC		1 + 2 -	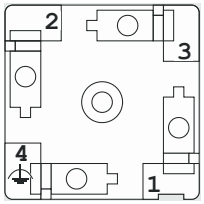
Output 4…20 mA, 2-wire		1 + 2 -	
F.E.		4	

PTU

Connection		plug connector as per DIN 175301, Form A	
Voltage supply 24 VAC/DC		1 + 2 -	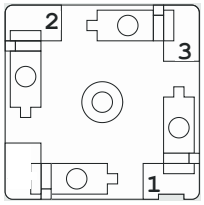
Output 0…10 V		2 - 3 +	
F.E.		4	

Connection of plug connector

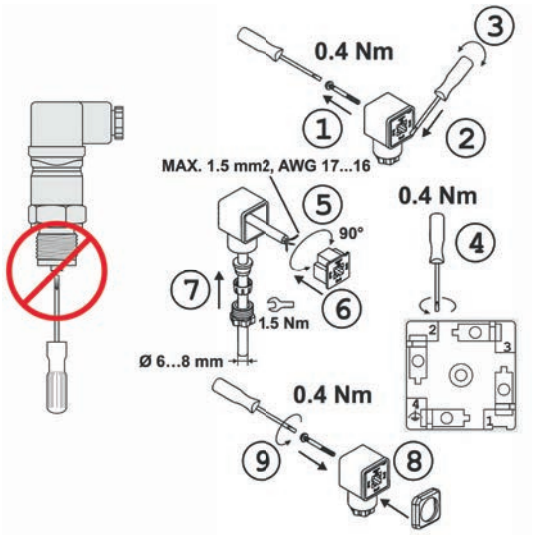

Note:
To ensure protection rating IP65, the plug connector must be completely mounted – with the gaskets included in the delivery (8) – and a cable of appropriate diameter must be used.

PTI

Typ	Measurement range (bar)	Overload limit (bar)	Bursting pressure (bar)
PTI4	0…4	12	20
PTI6	0…6	18	30
PTI10	0…10	30	50
PTI16	0…16	48	80
PTI25	0…25	75	125
PTI140	0…40	120	200

PTU

Typ	Measurement range (bar)	Overload limit (bar)	Bursting pressure (bar)
PTU4	0…4	12	20
PTU6	0…6	18	30
PTU10	0…10	30	50
PTU16	0…16	48	80

Dimensions (mm)

PTI

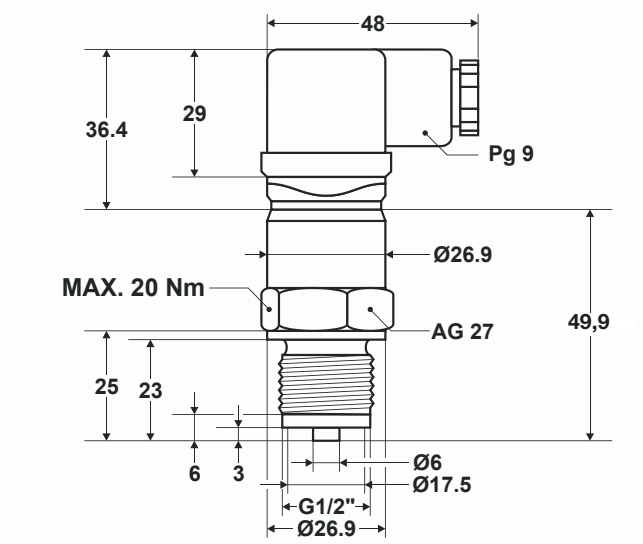

PTU

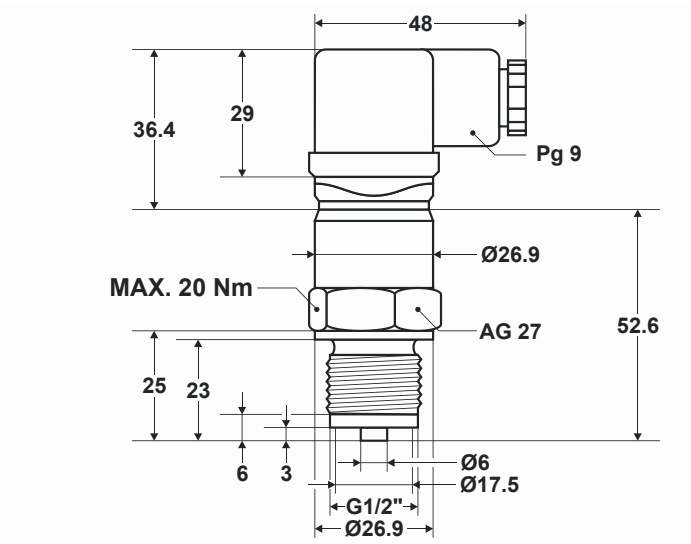

DTI/DTU

DTI/DTU

Differential pressure transmitters

The DTI (2-Wire) and DTU (3-Wire) Differential Pressure Transmitters are suitable for measuring differential pressures in liquid and gaseous media. They operate according to the piezo-resistive measuring principle. The measurement cell is welded into a seal-less stainless steel measurement chamber. Typical areas of application include: Compressors, Refrigeration and HVAC/R.

Technical data

Measurement range relative	0 - 0,6 bar to 0 - 10 bar
Temperature	
Operating	-20…+80 °C
Medium	-15…+100 °C
Storage	-50…+100 °C
Zero-point deviation	≤0,3 % of FFS
Char. curve deviation	≤ ±0,5 % of FFS
Hysteresis	≤ ±0,2 % of FFS
Reproduceability	≤ 0,1 % of FFS
In contact with medium	stainless steel 1.4571, 1.4435, 1.4305;
Housing	PA66, PBT GF30
Pressure connection	2X G1/8" as per DIN ISO 228
Elect. connection	Plug connector as per DIN 175301, Form A, wire cross-section max. 1.5 mm²
EMC	According to EN 61326
Protection rating	IP65
Voltage supply	
DTI (2-Wire)	10...30 VDC
DTU (3-Wire	24 VAC/DC ±10%
Output signal:	
DTI (2-Wire)	4...20 mA
DTU (3-Wire)	0...10 V
Mechanical vibrations	Max. 20 g at 15…2000 Hz (as per DIN IEC 68-2-6)
Mechanical shock	100 g (as per DIN IEC 68-2-27)
Weight	180 g
Incl. in delivery	Pressure transmitter, incl. plug connector and these instructions in individual packaging
Mounting orientation	As desired

Electrical connection

DTI

Connection		plug connector as per DIN 175301, Form A	
Voltage supply 10…30 VDC		1 + 2 -	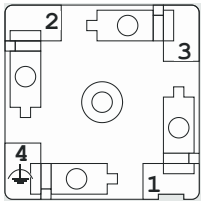
Output 4…20 mA		1 + 2 -	
F.E.		4	

DTU

Connection		plug connector as per DIN 175301, Form A	
Voltage supply 24 VAC/DC		1 + 2 -	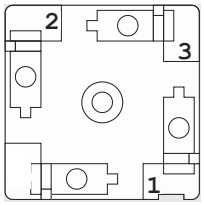
Output 0…10 V		2 - 3 +	
F.E.		4	

Connection of plug connector

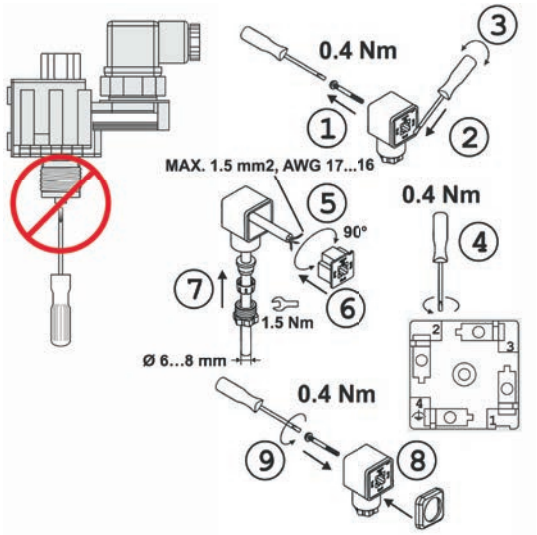

Note:
To ensure protection rating IP65, the plug connector must be completely mounted – with the gaskets included in the delivery (8) – and a cable of appropriate diameter must be used.

DTI

Model	measuring range	max. system pressure	Bursting pressure	Total error (FFS)	long-term stability, p.a.
DTI06	0 … +0,6 bar	5 bar	≥ 60 bar	≤ 2,3 %	≤ 0,6 %
DTI1	0 … +1 bar				
DTI2	0 … +2,5 bar	10 bar		≤ 2,0 %	≤ 0,6 %
DTI4	0 … +4 bar	30 bar [1])		≤ 1,8 %	≤ 0,4 %
DTI6	0 … +6 bar				
DTI10	0 … +10 bar			≤ 1,5 %	

1) Max. ambient temperature +60 °C 2) Incl. linearity, hysteresis, reproducibility, and temperature drift in the range of -15 … +85 °C

DTU

Model	measuring range	max. system pressure	Bursting pressure	Total error (FFS)	long-term stability, p.a.
DTU06	0 … +0,6 bar	5 bar	≥ 60 bar	≤ 2,3 %	≤ 0,6 %
DTU1	0 … +1 bar				
DTU2	0 … +2,5 bar	10 bar		≤ 2,0 %	≤ 0,6 %
DTU4	0 … +4 bar	30 bar [1])		≤ 1,8 %	≤ 0,4 %
DTU6	0 … +6 bar				
DTU10	0 … +10 bar			≤ 1,5 %	

1) Max. ambient temperature +60 °C 2) Incl. linearity, hysteresis, reproducibility, and temperature drift in the range of -15 … +85 °C

Dimensions (mm)

DTI/DTU

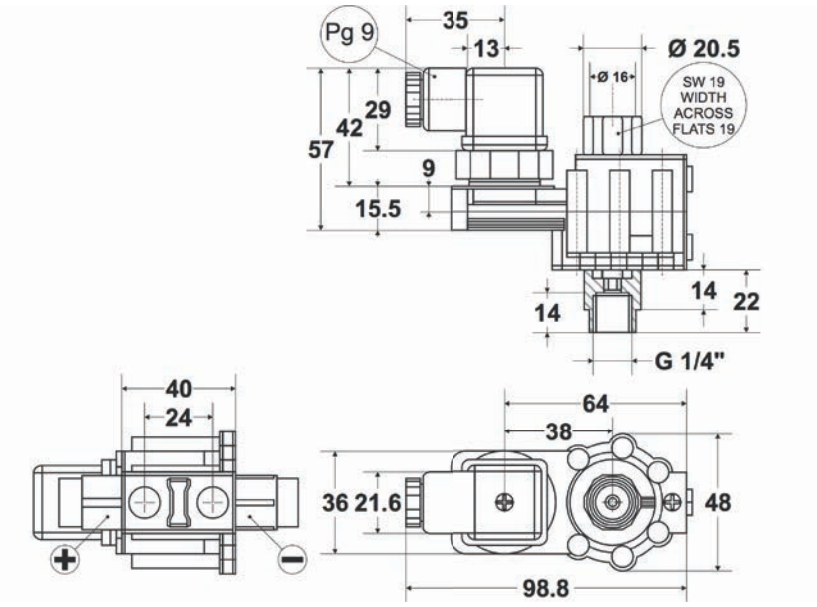

DPTE1000

DPTE (D)

Differential pressure transmitters, piezoresistive, for gaseous, non-aggressive media

DPTE series differential pressure transmitters are used to monitor gaseous, non-aggressive media.

SIL1 according IEC 61508-2

Possible applications include:
- Air-conditioning and ventilation systems
- Building automation
- Environmental protection
- Fan and ventilation control
- Valve and shutter control
- Filter and fan monitoring

Technical data

Pressure media	Air, and non-combustible and non-aggressive gases.
Pressure connection	Plastic connection piece with 6 mm external diameter for measuring hose with 5 mm internal diameter. Connector P 1 for higher pressure, P 2 for lower pressure.
Cable entry / electrical connection	M 20 x 1.5, screw terminals for wires and leads with conductor cross-section up to 5–10 mm².
Degree of protection according to DIN 40050	IP 54 with cover, IP 00 without cover
Mounting	Any mounting position possible, with screws supplied
Materials	Transmitter housing and pressure connection P2 made of ABS, light grey. Fastening element with pressure connection P1 made of POM, white.
Long-term stability in % FS/year	-50 Pa - 1000 Pa ≤ 2.5; 1000/2500 Pa ≤ 1.5
Repetition accuracy	< ± 0.2% of final value
Linearity and switching differetial factor	< ± 1% of end value
Response time	switchable 100 ms/1sec
Medium and ambient temperature	0°C to +50°C
Permitted air humidity	0–95% non-condensing
Operating voltage	18...30 V AC/DC, 18...30 V DC (2-wire)
Power consumption	Max. 1 W
Output signal	0–10 V, short-circuit-proof to ground 4–20 mA, short-circuit-proof ≤ 30 mA
Housing dimensions and weight	Diameter 85 mm x 58 mm, 130 g
Standards and conformity	EN 60770, EN 61326
Supplied accessories:	2 m silicone hose, 2 connection pieces with fastening screws, 2 self-tapping screws for fastening the housing

Differential pressure transmitter, 3-wire

without digital display, output signal 0-10 V und 4-20 mA current consumption max. 60 mA

Type	Default operating range in Pa	Operating range extended by jumpers in Pa
DPTE50S	–50/+50	not possible
DPTE100S	–100/+100	not possible
DPTE500S	–500/+500	not possible
DPTE1000S	–1000/+1000	not possible
DPTE100	0–100	0–250
DPTE250	0–250	0–500
DPTE500	0–500	0–1000
DPTE1000	0–1000	0–2500
DPTE5000	0–5000	0–10000

with digital display, output signal 0-10 V und 4-20 mA current consumption max. 110 mA

Type	Default operating range in Pa	Operating range extended by jumpers in Pa
DPTE50SD	-50/+50	not possible
DPTE100SD	-100/+100	not possible
DPTE500SD	-500/+500	not possible
DPTE1000SD	-1000/+1000	not possible
DPTE100D	0–100	0–250
DPTE250D	0–250	0–500
DPTE500D	0–500	0–1000
DPTE1000D	0–1000	0–5000
DPTE5000D	0–5000	0–10000

Differential pressure transmitter, 2-wire

without digital display, output signal 4-20 mA current consumption max. 21 mA

Type	Default operating range in Pa	Operating range extended by jumpers in Pa
DPTE52S	–50/+50	not possible
DPTE102S	–100/+100	not possible
DPTE102	0–100	0–250
DPTE252	0–250	0–500
DPTE502	0–500	0–1000
DPTE1002	0–1000	0–2500
DPTE5002	0–5000	0–10000

Legend: DPT: Differential Pressure Transmitter; **E:** Standardtype; **A:** automatic re-zeroing; **Q8:** Multirange variant, selectable via rotary switch; **S:** Symmetrical +/- pressure range; **D:** Digital display LED red

CE

Protection Class: IP 54

DPTA25

DPTA (D), DPTAQ (D)

Differential pressure transmitters, piezoresistive, for gaseous, non-aggressive media

DPTA series differential pressure transmitters are used to monitor gaseous, non-aggressive media.

SIL1 according IEC 61508-2

Possible applications include:

- Air-conditioning and ventilation systems
- Building automation
- Environmental protection
- Fan and ventilation control
- Valve and shutter control
- Filter and fan monitoring

Technical data

Pressure media	Air, and non-combustible and non-aggressive gases.
Pressure connection	Plastic connection piece with 6 mm external diameter for measuring hose with 5 mm internal diameter. Connector P 1 for higher pressure, P 2 for lower pressure.
Cable entry / electrical connection	M 20 x 1.5, screw terminals for wires and leads with conductor cross-section up to 5–10 mm².
Degree of protection according to DIN 40050	IP 54 with cover, IP 00 without cover
Mounting	Any mounting position possible, with screws supplied
Materials	Transmitter housing and pressure connection P2 made of ABS, light grey. Fastening element with pressure connection P1 made of POM, white.
Repetition accuracy	< ± 0.2% of final value
Linearity and switching differetial factor	< ± 1% of end value
Response time	switchable 100 ms/1sec
Medium and ambient temperature	0°C to +50°C
Permitted air humidity	0–95% non-condensing
Operating voltage	22...30 V AC/DC
Power consumption	Max. 1 W
Output signal	0–10 V, short-circuit-proof to ground 4–20 mA, short-circuit-proof ≤ 30 mA
Housing dimensions and weight	Diameter 85 mm x 58 mm, 130 g
Standards and conformity	EN 60770, EN 61326
Supplied accessories:	2 m silicone hose, 2 connection pieces with fastening screws, 2 self-tapping screws for fastening the housing

8-range differential pressure transmitter with automatic re-zeroing 3-wire version

Type	Selectable pressure range by rotary switch Pa
without digital display, output signal 0-10 V and 4-20 mA current consumption max. 160 mA	
DPTAQ8	-50/+50, -100/+100, /-250/+250, -500/+500, 0–100, 0–250, 0–500, 0–1000
with digital display, output signal 0-10 V and 4-20 mA current consumption max. 210 mA	
DPTAQ8D	-50/+50, -100/+100, /-250/+250, -500/+500, 0–100, 0–250, 0–500, 0–1000

Differential pressure transmitter with automatic zeroing 3-wire version

Type	Default operating range in Pa	Operating range extended by jumpers in Pa
without digital display, output signal 0-10 V and 4-20 mA current consumption max. 160 mA		
DPTA25S	–25/+25	not possible
DPTA25	0–25	0–50
with digital display, output signal 0-10 V and 4-20 mA current consumption max. 210 mA		
DPTA25SD	–25/+25	not possible
DPTA25D	0–25	0–50

Typeseries DPTA (D), DPTAQ (D) and DPTE

Dimensioned drawings

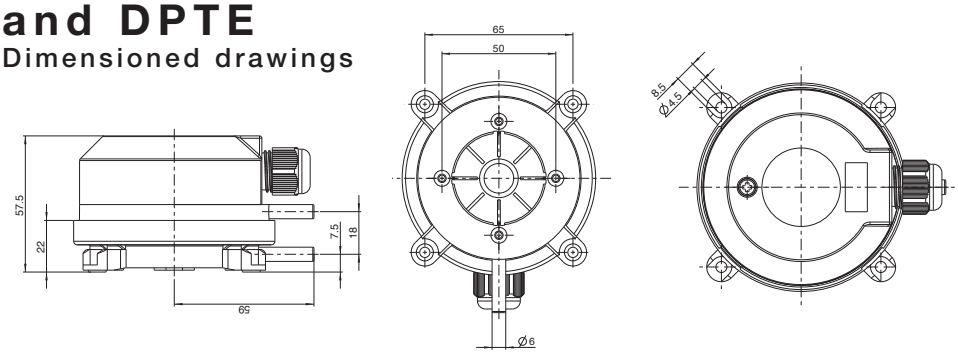

CE

Protection Class: IP 54

Specifications

DPTA…
Differential pressure transmitter for gaseous, non-aggressive media
Output signal 0 ... 10 V, short-circuit proof against ground,
4 ... 20 mA, short-circuit proof <30 mA,
pressure range: 0 … 25 or 0 ... 50 Pa
with automatic re-zeroing

DPTAQ8…
8-range differential pressure transmitter for gaseous non-aggressive media
Output signal 0 ... 10 V, short-circuit proof against ground,
4 ... 20 mA, short-circuit proof <30 mA,
8 pressure ranges, selectable by rotary switch, with automatic re-zeroing

DPTE…
Differential pressure transmitter for gaseous non-aggressive media
Output signal 0 ... 10 V, short-circuit proof against ground,
4 ... 20 mA, short-circuit proof <30 mA,
Pressure range: …... Pa

DTI
Differential Pressure Transmitter for measurement of pressure in the range of 0 - 0,6 bar up to 0 - 10 bar, 2-wire, powered with 10 -30 VDC, Output-signal 4 - 20 mA.

DTU
Differential Pressure Transmitter for measurement of pressure in the range of 0 - 0,6 bar up to 0 - 10 bar, 3-wire, powered with 24 V AC/DC, Output-signal 0 - 10 V.

PST...-R
Electronic pressure switch/transmitter
with 5-pin plug connection to DIN IEC 60947-5-2, supply voltage: 14…36 VDC
Nominal pressure range …–… mbar/bar,
output signal: 4–20 mA and 0–10 V, selectable and invertible

PTH, PTS…
Electronic relative pressure transmitter
for the working ranges -1…+1 bar and 0–40 bar.

PTHD, PTSD…
Electronic differential pressure transmitter
Smart SN DIFF for measuring the differential- and relative-pressure pitches from 0–100 mbar till 0-20 bar.

PTI
Pressure Transmitter for measurement of pressure in the range of 0 - 4 bar up to 0 - 40 bar.
2-wire, powered with 10 - 30 VDC, Output-signal 4 - 20 mA

PTU
Pressure Transmitter for measurement of pressure in the range of 0 - 4 bar up to 0 - 16 bar.
3-wire, powered with 24 VAC/DC, Output-signal 0 - 10 V

THERMOSTATS

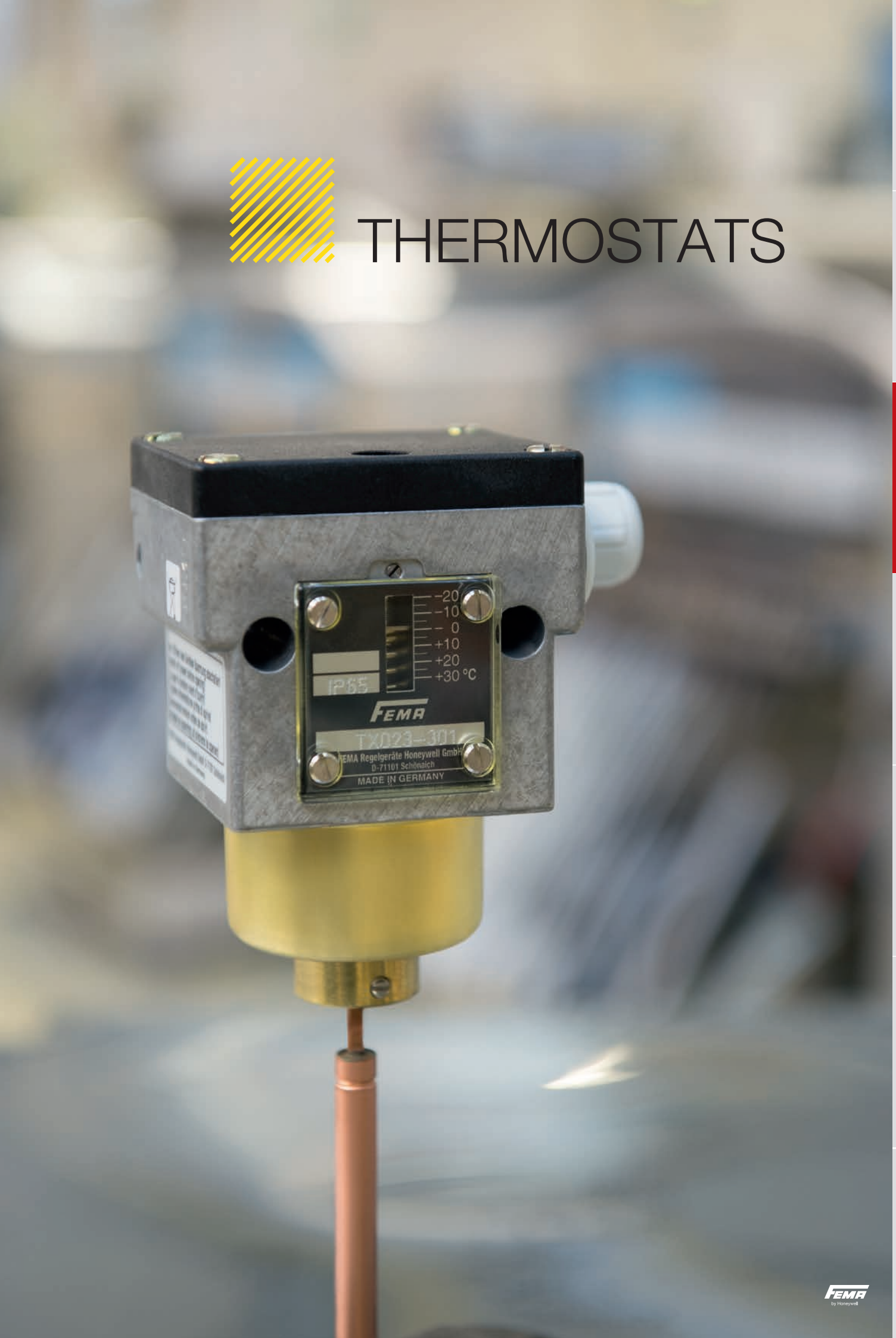

FEMA
by Honeywell

Type	Temperature range	Directive for CE	Testing basis	Comments	Page
TAM	-20…+130°C	2014/35/EU	DIN EN60730-1 DIN EN60730-2-6	Capillary thermostat	112
TRM	-20…+50°C	2014/35/EU	DIN EN60730-1 DIN EN60730-2-6	Room thermostat	103
TX	-20 ... +90°C	2014/35/EU	DIN EN60730-1 DIN EN60730-2-6	Rod thermostat	113
Ex-TAM	-20…+130°C	ATEX 2014/34/EU IECEx	DIN EN 60730 DIN EN 60079	Ex-d-Capillary thermostat	119
Ex-TRM	-20…+50°C	ATEX 2014/34/EU IECEx	DIN EN 60730 DIN EN 60079	Ex-d-Room thermostat	120
Ex-TX	-20…+90°C	ATEX 2014/34/EU IECEx	DIN EN 60730 DIN EN 60079	Ex-d-Rod thermostat	118
TAM...-513	-20…+130°C	ATEX 2014/34/EU IECEx	DIN EN 60730 DIN EN 60079	Ex-i-Capillary thermostat	112, 100
TRM...-513	-20…+50°C	ATEX 2014/34/EU IECEx	DIN EN 60730 DIN EN 60079	Ex-i-Room thermostat	103, 100
TX…-513	-20...+90°C	ATEX 2014/34/EU IECEx	DIN EN 60730 DIN EN 60079	Ex-i-Rod thermostat	113, 100
TXB…-513	-20...+90°C	ATEX 2014/34/EU IECEx	DIN EN 60730 DIN EN 60079	Ex-i-Rod thermostat	113, 100
FT69	-8...+8°C	2014/35/EU	DIN EN 60335-1	Frost protection thermostat	107
FTSE	-8...+8°C	2014/30/EU 2014/35/EU	DIN EN 61326-1 DIN EN 60730-1 DIN EN 60730-2-9	Electronic frost protection thermostat	108 – 109
STW	+20…130°C	2014/35/EU 2014/30/EU 2014/68/EU	DIN EN 14597 DIN EN 61326-1 DIN EN 60730 DIN EN 55014-1	Temperatur Monitor	114 – 116
STB	+20…130°C	2014/35/EU 2014/30/EU 2014/68/EU	DIN EN 14597 DIN EN 61326-1 DIN EN 60730 DIN EN 55014-1	Temperature Limiter	114 – 116
T6120A	0…60°C	2014/35/EU	DIN EN 60335-1	Room thermostat with 1 c/o contact	104 – 105
T6120B	-30…+30°C	2014/35/EU	DIN EN 60335-1	Room thermostat with 2 c/o contact	104 – 105
Smart Temp **TST**	-50…+400°C	2014/35/EU	DIN EN 61326-1 DIN EN 60730-1	Electronic thermostat / transmitter	122 – 126

General technical information

for series TX, TRM and TAM

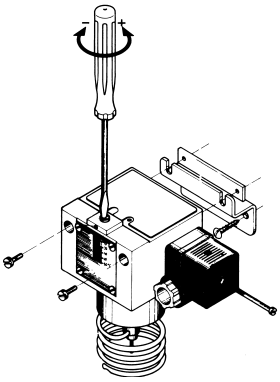

Adjustment of thermostats at lower switching point
Setpoint x_s corresponds to the lower switching point (with falling temperature), the upper switching point x_o (with rising temperature) is higher by the amount of the switching differential x_d.

Setting the switching temperature (setpoint adjustment)
Prior to adjustment, the setscrew above the scale must be loosened by approx. 2 turns and retightened after setting.
The switching temperature is set via the spindle. The set switching temperature is shown by the scale.In view of tolerances and variations in the characteristics of sensors and springs, and due to friction in the switching kinematics, slight discrepancies between the setting value and the switching point are unavoidable. The thermostats are usually calibrated in such a way that the setpoint adjustment and the actual switching temperature correspond as closely as possible in the middle of the range. Possible deviations spread to both sides equally.
Clockwise: low switching temperature
Anticlockwise: high switching temperature

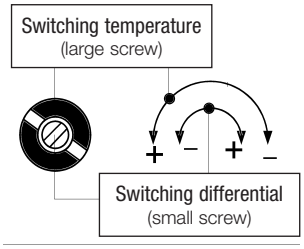

Changing the switching differential (only for room thermostat TRMV…)
The switching differential is changed by turning the setscrew within the spindle. The lower switching point is not changed by the differential adjustment; only the upper switching point is shifted by the differential. One turn of the differential screw changes the switching differential by about 1/2 of the total differential range.
When adjusting please note:
Switching temperature: Clockwise for lower switching point.
Anticlockwise for higher switching point.
Switching differential: Clockwise for larger differential. Anticlockwise for smaller differential.

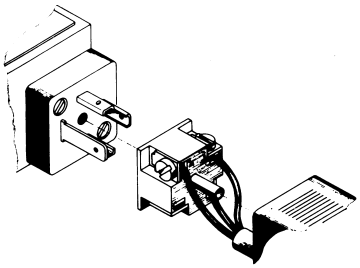

Electrical connection
Plug connection to DIN EN175301. Cable entry Pg 11, max. cable diameter 10 mm.
Cable outlet possible in 4 directions spaced 90° apart.

Mounting position
A vertical mounting position is preferable if at all possible. IP 54 protection is guaranteed with a vertical mounting position. A different mounting position may alter the protection class, but the operation of the thermostat is not affected.

Outdoor installation of thermostats
FEMA thermostats can be installed out of doors provided they are mounted vertically and suitably protected against the direct effects of weather. At ambient temperatures below 0°C, ensure that condensation cannot occur in the sensor or in the switching device.

Mechanical thermostats

Principal technical data

	Standard version	Terminal connection
	...200	...300
Switch housing	Diecast aluminium GDAlSi 12	Diecast aluminium GDAlSi 12
Switching function and connection scheme (applies only to version with microswitch)	Floating changeover contact With rising teperature single pole switching from 3–1 to 3–2 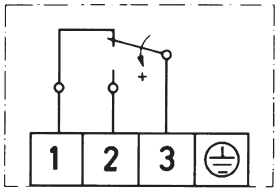	Floating changeover contact. With rising temperature single pole switching from 3–1 to 3–2 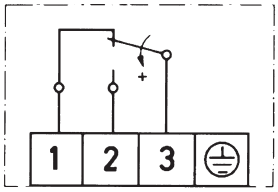
Switching capacity (applies only to version with microswitch)	8 A at 250 VAC 5 A at 250 VAC inductive 8 A at 24 VDC 0.2 A at 110 VDC 0.3 A at 250 VDC min. 10 mA, 12 VDC	8 A at 250 VAC 5 A at 250 VAC inductive 8 A at 24 VDC 0.2 A at 110 VDC 0.3 A at 250 VDC min. 10 mA, 12 VDC
Mounting position	Vertical or horizontal, preferably vertical	Vertical
Protection class (in vertical position)	IP 54	IP 65
Electrical connection	Plug connection to DIN EN175301	Terminal connection
Cable entry	Pg 11	M 16 x 1.5
Ambient temperature	–15 to +70 °C	–15 to +70 °C
Switching point	Adjustable with spindle	Adjustable with spindle after the terminal box cover is removed
Switching differential	Adjustable or not adjustable (see Product Summary)	Not adjustable
Medium temperature	Max. 70 °C, briefly 85 °C	Max. 70 °C, briefly 85 °C
Vibration strength	No significant deviations up to 4 g. At higher accelerations, the switching differential is reduced slightly. Use over 25 g is not permitted.	
Isolation values	Overvoltage category III, contamination class 3, reference surge voltage 4000 V. Conformity to DIN VDE 0110 is confirmed.	

Sensor systems

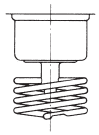

Room sensor TRM

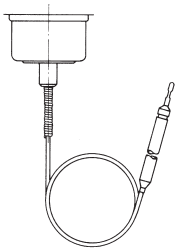

Capillary tube sensor TAM

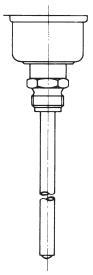

Rod sensor TX+R10

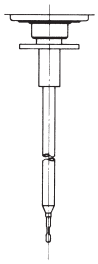

Air duct sensor TX+R6

Mechanical thermostats

Principal technical data

	Terminal connection	Ex version
	...500 (Ex-i)	...700 (Ex-d)
Switch housing	Diecast aluminium GDAlSi 12	Diecast aluminium GDAlSi 12
Switching function and connection scheme (applies only to version with microswitch)	Floating changeover contact With rising temperature single pole switching from 3–1 to 3–2 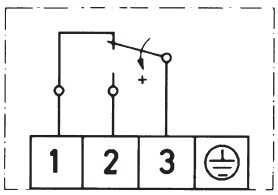	Floating changeover contact. With rising temperature single pole switching from 3–1 to 3–2 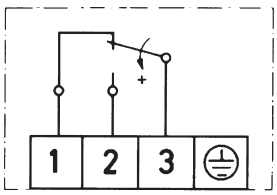
Switching capacity (applies only to version with microswitch)	max. 100 mA, 24 VDC min. 2 mA, 24 VDC	3 A at 250 VAC 2 A at 250 VAC inductive 3 A at 24 VDC 0.1 A at 250 VDC min. 2 mA, 24 VDC
Mounting position	Vertically upright	Vertically upright
Protection class (in vertical position)	IP 65	IP 65
Explosion protection with immersion well	**Ex II 1/2G Ex ia IIC T6 Ga/Gb** **Ex II 1/2D Ex ia IIIC T80 °C**	**Ex II 2G Ex d e IIC T6 Gb** **Ex II 1/2D Ex ta/tb IIIC T80 °C Da/Db** **Exception: EX-TRM...:** **Ex II 2G Ex d e IIC T6 Gb** **Ex II 2D Ex tb IIIC T80°C Db**
Electrical connection	Terminal connection	Terminal connection
Cable entry	M 16 x 1.5	M 16 x 1.5
Ambient temperature	–15 to +60 °C	–20 to +60 °C
Switching point	Adjustable with spindle after the terminal box cover is removed	Adjustable with spindle after the terminal box cover is removed
Switching differential	not adjustable	Not adjustable
Medium temperature	Max. 60 °C	Max. 60 °C
Vibration strength	No significant deviations up to 4 g. At higher accelerations, the switching differential is reduced slightly. Use over 25 g is not permitted.	
Isolation values	Overvoltage category III, contamination class 3, reference surge voltage 4000 V. Conformity to DIN VDE 0110 is confirmed.	

Sensor systems

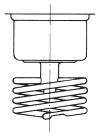

Room sensor TRM

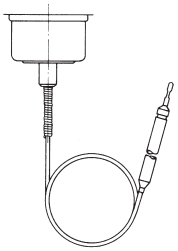

Capillary tube sensor TAM

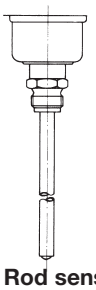

Rod sensor TX+R10

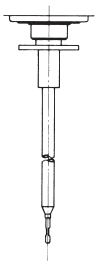

Air duct sensor TX+R6

Plug connection 200 series	Description	Connection scheme
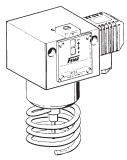	**Standard version** Microswitch, single pole switching	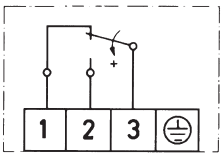
ZFT213	**Gold-plated contacts** with low contact resistance (e. g. for low voltage) Adjustable switching diff. is not available	
ZFT301	**Terminal connection housing (IP 65)**	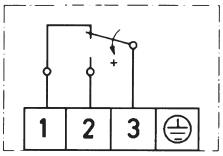
ZFT351	**Protection class IP 65 and switch housing with surface protection** (terminal connection housing)	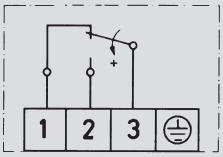
ZFT513	**Ex-i-version** 500 housing, blue cable entry and terminal connection Gold-plated contacts, protection class IP 65 **Power supply circuit:** U_i 24 V DC C_i 1 nF I_i 100 mA L_i 100 µH	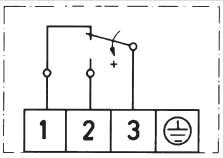

Note to non-available items:
In our article master all the possible technical combinations are not created. Therefore we recommend the previous request for clarification and selection of an alternative solution.

Example for ordering:
TX150-513

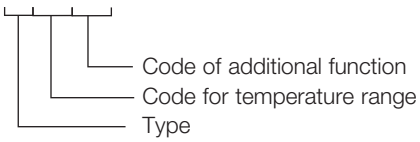

Service functions

Devices with service functions will be produced individually according to the customer's specifications. The system requires that these product combinations be identified in such a way as to prevent any possibility of confusion. These combinations are characterised by a product code with the suffix "-S" on the packaging label as well as separate labels with barcodes for each service function.

Service functions	
ZFT5970	**Setting of switching point according to customer's instructions**
ZFT5971	**Setting of switching points according to customer's instructions with lead sealing**
ZFT1978	**Labelling of units** according to customer's instructions with sticker **Test certificates according to EN 10 204**
WZ2.2	**Factory certificate 2.2 based on non-specific specimen test**
AZ3.1B1	**Acceptance test certificate 3.1 based on specific test**

**** Switching point adjustment:** Please specify **switching point and direction of action** (rising or falling pressure).
Service functions are available for the following type series (including Ex-versions):
Thermostats: TAM, TX, TRM,
Ordering devices with service functions: See page 29.

Ventilation and air-conditioning systems

TRM150

TRM

Room thermostats for industrial uses

FEMA room thermostats are suitable for industrial plants, for greenhouses, livestock buildings and warehouses, and also for monitoring the maximum temperature in switchgear cabinets and relay stations. Room thermostats are supplied complete with wall bracket H1.

➔ p. 105
➔ p. 122

Ventilation and air-conditioning systems

T6120A1005

T6120 A/B

Thermostats for industrial uses

Thermostats are suitable for monitoring temperatures in business premises, such as warehouses, machine rooms and garages, as well as greenhouses and indoor areas of agricultural use. Versions with a copper sensor element can also be used in damp locations, chillers and freezers.

➔ p. 106 – 107

Ventilation and air-conditioning systems

H6045A1000

H

Room and duct hygrostats

The H6045A1002 single-stage duct hygrostat and the H6120A1000 single-stage room hygrostat are designed for monitoring relative humidity in air conditioning systems and climatic chambers and for controlling air humidifiers and dehumidifiers in indoor swimming pool buildings. Both devices have a dust protected microswitch with a high switching capacity. Due to their simple and robust construction, they offer a low-cost solution for heating, ventilation and air-conditioning systems.

➔ p. 108

Ventilation and air-conditioning systems

FT69

Single-stage protection thermostats for air heating and climate control systems

FT6960-60

They register the temperature along the entire length of the capillary. When mounting outdoors, please note that the fluid reservoir located in the thermostat is also temperature-sensitive and thus an integral part of the active measuring system. If the temperature of any 30-cm-long segment of the capillary drops to below the set-point, the thermostat will switch off automatically.
The complete length of the capillary must be looped uniformly along the air conduit's entire cross-section. If the capillary is damaged, the thermostats will switch off automatically.

➔ p. 109

Liquids and gases

STW/STB

Safety strap-on thermostats

STW70130

Self- monitoring sensor systems for temperature monitoring and limiting tasks, e.g., for floor-heating applications.
If the sensor is damaged, i.e., if the expansion fluid in the capillary tube leaks, the strap-on thermostat responds as though the temperature has exceeded the set-point and will thus switch to the safety setting (e.g., will switch off the circulation pump).
To ensure reliable functioning, the surface of the pipe must be thoroughly cleaned of contamination, rust, paint, etc. Each thermostat is delivered together with a strap allowing attachment to pipes having a diameter of up to 100 mm. Additionally, the thermostat can be mounted to walls using the capillary. An optional immersion well allows use as an immersion sensor. This demonstrates the great versatility of this innovative device, which is also reflected in the small quantity of stock kept on hand by customers. Among the innovative features of this device are its automatic temperature compensation and the Push-In® contacts for quick wiring. The devices are CE-approved and UL-certified and also certified according to Pressure Equipment Directive DIN EN14597.

➔ p. 116

FTSE

Electronic Frost Protection Thermostat with 2m and 6m long capillary tube.

Frost protection thermostats are installed on the air side for the purpose of protecting air conditioning units, heat exchangers, radiators, and similar installations against damages due to frost or freezing. With the FTSE Electonic Frost Protection Thermostat, Honeywell FEMA has expanded its line of electromechanical products with an electronic device.

➔ p. 110 – 111

TRM150

Room thermostats type series TRM

for industrial premises

FEMA room thermostats are suitable for industrial plants, greenhouses, livestock buildings and warehouses, and also for monitoring the maximum temperature in switchgear cabinets and relay stations. Room thermostats are supplied complete with wall bracket H1.

SIL 2 according IEC 61508-2

Technical data

Body	Diecast aluminium GD Al Si 12 according to DIN 1725. Resistant to ammoniacal vapours and seawater
Mounting position	Any, preferably vertical
Max. ambient temperature	70°C
Max. temperature at sensor	70°C
Contact arrangement	Single-pole changeover switch
Switching capacity	8 (5) A 250 VAC
Degree of protection	IP 54 according to DIN EN 175301 (with vertical installation)
Mounting	With wall bracket H1 or directly on the wall with 2 screws (Ø 4)
Calibration	Scale value corresponds to the lower switching point (with falling temperature), the upper switching point is higher by the amount of the switching differential
Plug connection	Via angled plug to DIN EN175301 (3-pin + earth contact), cable entry Pg 11, max. cable diameter 10 mm, cable outlet possible in 4 directions spaced 90° apart.
Switching temperature	Adjustable from outside with screwdriver
Switching differential	Not adjustable on TRM series, adjustable on TRMV series

Product Summary

Type	Setting range	Switching differential (Tolerance)
Switching differential not adjustable		
TRM022	–20 to +20 °C	0,8 ... 2,5 K
TRM40	0 to +40 °C	0,8 ... 2,5 K
TRM150	+10 to +50 °C	0,8 ... 2,5 K
Switching differential adjustable		
TRMV40	0 to +40 °C	4 ... 10 K
TRMV150	+10 to +50 °C	4 ... 10 K

Ex-TRM, page 122

Dimensioned drawing (mm)

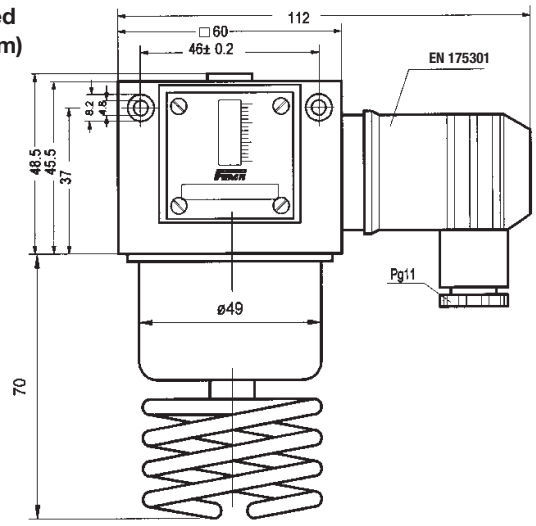

Protection Class: IP 54

T6120B1003

Room thermostats
Type series T6120A, B

Single and dual stage

- Liquid-filled copper and stainless steel sensors
- Robust design:
  Protection class IP 54 or IP 65
- Easy installation and wiring
- Dustproof encapsulated microswitch with changeover contact for heating and cooling

Applications

T6120A and B single and dual stage room thermostats are suitable for measuring, monitoring and controlling temperatures in heating and cooling systems.
These devices are used for the following applications:

- Commercial buildings
- Storage premises
- Garages
- Machine rooms
- Factories
- Greenhouses
- Livestock buildings

Dimensions

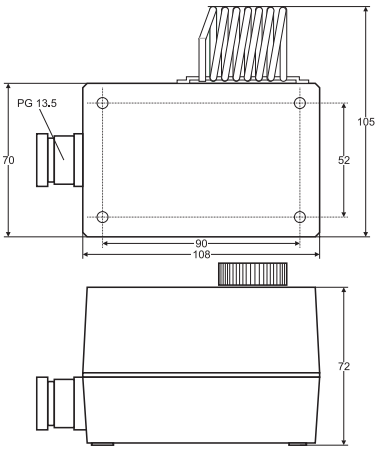

T6120A1005 (in mm)

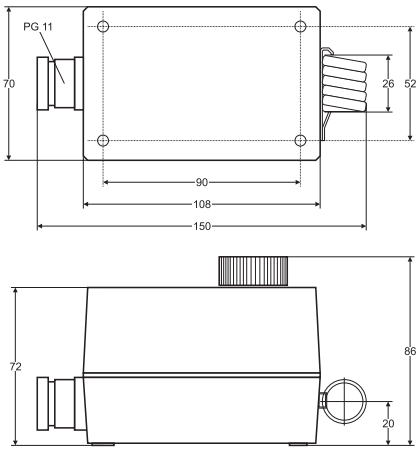

T6120B1003 (in mm)

	T6120A1005	T6120B1003
Number of stages	1	2
Contact type	1 changeover contact	2 changeover contact
Switching differential	1 K (fixed)	1 K (fixed)
per stage between stages		2…10 K (adjustable)
Setting range	0…60 °C	-30…+30 °C
Working temperature	-10…+65 °C	-15…+60 °C
Storage temperature	-20…+70 °C	
Permissible switching current	10 (1.5) A	15 (8) A
Permissible switching voltage	250 V AC	24…250 V AC
Housing material	ABS, glas fibre reinforced	
Sensor material	1.4301	copper
Weight	360 g	530 g
Protection class	IP 54	IP 65
Dimensions (W x H x L in mm)	108 x 70 x 72	

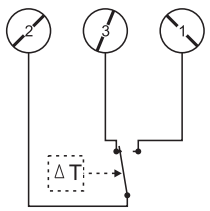

Figure 1: T6120A1005

Function and wiring T6120A1005
To control a heating unit, connect terminals 2 and 3 of the thermostat to the heating unit. When the temperature rises, the contact will open (see Figure 1). To control a cooling unit, connect terminals 1 and 2 of the thermostat to the cooling unit. When the temperature drops, the contact will open (see Figure 1).

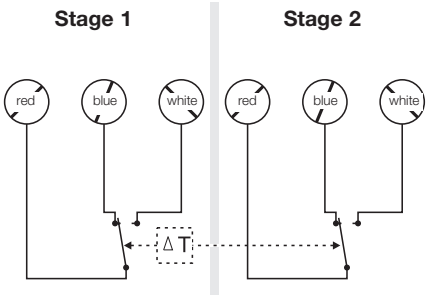

Figure 2: T6120B1003

Function and wiring T6120B1003
To control a heating unit, connect the red terminal and the blue terminal of both stages of the thermostat to the corresponding terminals of the heating unit. When the temperature rises, first the contact of stage 1 opens. If the temperature continues to rise by an amount corresponding to the set switching differential, the contact of stage 2 opens. To control a cooling unit, connect the red terminal and white terminal of both stages of the thermostat to the corresponding terminals of the cooling unit. When the temperature falls, first the contact of stage 1 opens. If the temperature continues to fall by an amount corresponding to the set switching differential, the contact of stage 2 opens (see Figure 3). See also the explanation given below: "Adjusting the switching differential between 2 stages on the T6120B1003".

Adjusting the switching differential between 2 stages on the T6120B1003
The switching differential between the two stages can be adjusted between 2 K (factory setting) and 10 K. To do this, pull off the adjustment knob, undo the two fastening screws, and remove the housing cover. An adjustment lever with scale is now visible on the side. Move this lever to the right to increase the switching interval. Move it to the left to reduce the switching differential.

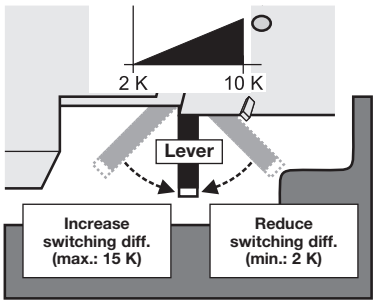

Room and duct hygrostats
Type series H6045/H6120

Single-stage

H6120A1000

The H6045A1002 single-stage duct hygrostat and the H6120A1000 single-stage room hygrostat are designed for monitoring relative humidity in air conditioning systems and climatic chambers and for controlling air humidifiers and dehumidifiers in indoor swimming pool buildings.

Further applications include air humidity regulation in food storage premises, the textile and paper industries, printing works, the optical and chemical industries, greenhouses, hospitals and wherever relative air humidity levels need to be measured, controlled and monitored.

Technical data

H6045A1002 duct hygrostat

Range	35…100 % r.h.
Relative humidity	
Switching capacity	15 (8) A, 24…250 VAC
Switch	Single-pole changeover
Working temperature	-10 to +65°C
Max. air-flow speed	8 m/s
Protection class	IP 65
Protection class	I
Tolerance	max. 4 % r.h.
Switching differential	5 % r.h.
Housing material	ABS glass fibre reinforced
Weight	480 g

H6120A1000 Room hygrostat

Range	35…100% r.h.
Relative humidity	
Switching capacity	5 (0.2) A, 230 VAC
Switch	Single-pole changeover
Working temperature	0 to +60°C
Max. air-flow speed	15 m/s
Protection class	IP 30
Protection class	I
Tolerance	max. 3 % r.h.
Switching differential	4 % r.h.
Housing material	ABS (white)
Weight	125 g

Switching point adjustment

The switching point can be adjusted using the knob located on the top of the device. The clearly marked scale and the pointer on the housing make it very easy to adjust the humidity level.

Mounting

H6045A1002

The duct hygrostat H6045A1002 can be installed directly in air ducts using the included mounting bracket.

Both devices have a dustproof encapsulated microswitch with high switching capacity. Thanks to their simple and robust construction, they offer a low-cost solution for heating, ventilation and air-conditioning systems.

Type
H6045A1002
H6120A1000

Electrical connection

H6045A1002

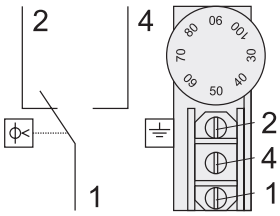

H6120A1000

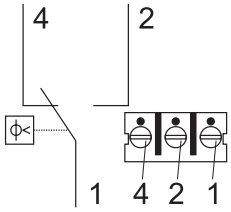

Dimensions

H6045A1002

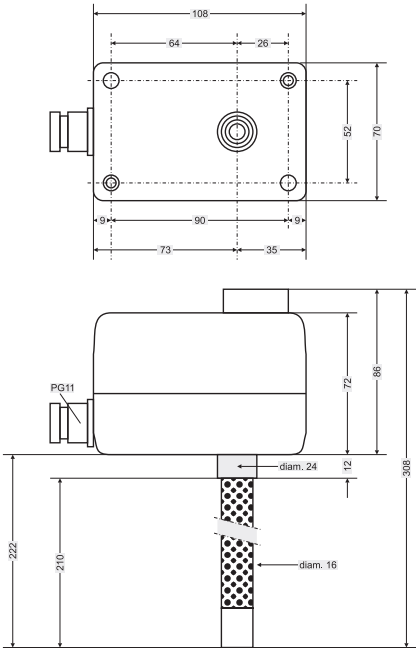

H6120A1000

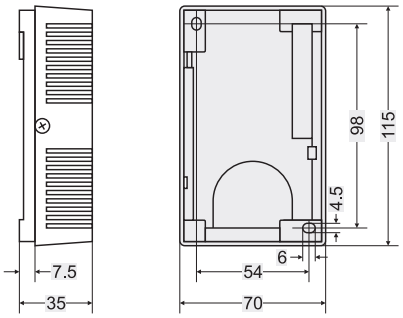

H6120A1000

The room hygrostat H6120A1000 must be installed far enough away from heat sources and out of direct sunlight. Care must be taken to ensure that air can flow freely past the sensor. The ideal installation position on the wall is at a height of approx. 1.5 m from the floor.

FT69

FT69

Single-stage protection thermostats for air heating and climate control systems

They register the temperature along the entire length of the capillary. When mounting outdoors, please note that the fluid reservoir located in the thermostat is also temperature-sensitive and thus an integral part of the active measuring system. If the temperature of any 30-cm-long segment of the capillary drops to below the set-point, the thermostat will switch off automatically. The complete length of the capillary must be looped uniformly along the air conduit's entire cross-section. If the capillary is damaged, the thermostats will switch off automatically.

Technical data

Max. overload temp.	200 °C (max. 1hr)
Switching capacity	250 VAC; 15(8) A
Adjustable temp. range	-8...+8 °C (+18...+46 °F)
Storage temperature	-30...+60 °C
Operating temperature	-20...+55 °C
Switching differential	2 K
Reproducibility	± 1 K
Protection class	IP65 as per EN60529
Wiring terminals	Screw terminals for wires of up to 1.5 mm² cross-section
Cable entry	M20x1.5 for ø 6...13 mm
Housing materials	Polycarbonate and ABS
Weight	280 g
Dimensions	125 x 75 x 62 mm

Type	Protection class	Capillary length	Reset
FT6960-18	IP 65	1,8 m	manual
FT6960-30	IP 65	3,0 m	manual
FT6960-60	IP 65	6,0 m	manual
FT6961-18	IP 65	1,8 m	auto
FT6961-30	IP 65	3,0 m	auto
FT6961-60	IP 65	6,0 m	auto

Accessories included in Delivery:

· The 3-meter and 6-meter versions are each delivered with 6 mounting retainers.
· The 1.8-meter version is delivered with 3 mounting retainers..

Wiring

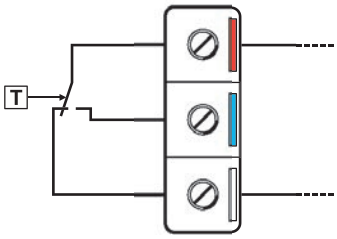

Normally closed contact (white - red)
T > set point (no risk of frost)

Dimensioned drawings (mm)

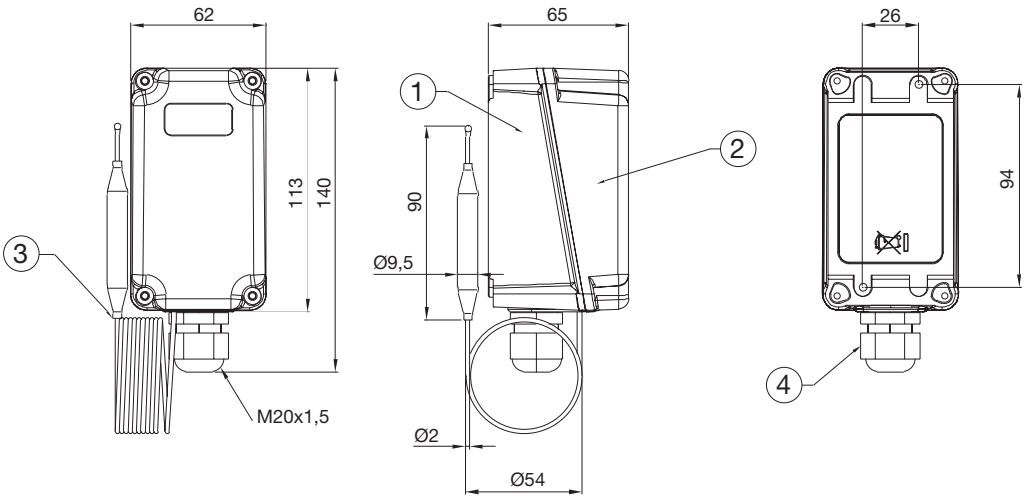

Protection Class:
IP 65

FTSE

Electronic frost protection thermostat with 2m and 6m-long capillary tube.

Frost protection thermostats are installed on the air side for the purpose of protecting air conditioning units, heat exchangers, radiators, and similar installations against damages due to frost or freezing. With the FTSE Electonic Frost Protection Thermostat, Honeywell FEMA has expanded its line of electromechanical products with an electronic device.

Technical data

Measuring range	0…+15 °C
Setting range	1…10 °C
Accuracy	+/-1 K
Switching diff.	approx. 2 K
Sensitivity	
Air at rest	approx. 90 sec
Air in motion	approx. 45 sec
Cooling of the capillary length	
Min. length	250 mm
Weight and capillary length	
FTSE20	2m, 0.34 kg
FTSE60	6m, 0.41 kg
Electrical connection	
Terminals with tension clamp	
Cross-section	max. 2.5 mm²
	min. 0.25 mm²
Power supply	24 V AC, +10/-20 %
Frequency	48–63 Hz
Power consumption	6.6 VA
Analog input	
Sensor temperature	DC 0...10 V, max. 0.1 A
Max. cable length	300 m. at 1.5 mm²
Analog output	
Sensor temperature	10-0 V @ 0-10 °C
Controller	DC 0–10 V
Current	max. 1 mA
Max. cable length	300 m at 1.5 mm²
Relay output	
Min. switch cap.	AC/DC 12V, 100 mA
Max. switch cap.	AC 230V, 6(2)A
	DC 24V, 6A
Op. temperature	nach IEC721-3-3
Climate protection	3K5
Temperature	-15…+55 °C
Humidity	< 85 % r. F.
Storage temperature	for IEC721-3-2
Climate protection	3K5
Temperature	-25…+65 °C
Humidity	< 95 % r. F.
EMV	
Emitted interference	Class B (EN61326-1)
Noise immunity	Industry (EN61326-1)
CE	2004/108/EG
LVD	2006/95/EG
Vibration	
DIN EN 60712-3-3	Class 3M2
Materials / colors	
Housing cover	PC, transparent
Housing subass.	PA, silver-gray RAL7001
Cover	ABS, light-gray RAL7035
Sensor wire	copper
Packaging	corrugated cardboard

Function
A special warming-up function, the integrated housing head heater, and the especially simple operation are the hallmarks of this new product. If any portion of the capillary tube is cooled to below the set temperature switch-point, the thermostat automatically switches itself off. Alternatively, the thermostat can be adjusted to function as either a monitor or as a limiter (the latter with a manual reset). The built-in relay contact allows the direct switching of loads of up to 250 VAC, 6(2) A. Over the measuring range of +10...0 °C, the sensor delivers an output signal of 0...10V at the ouput. At this output, a heating valve actuator will then open continuously according to the output signal.

Additionally, it is possible to issue a control coltage to the 0...10V output via the 0...10V input. As soon as the temperature drops below the temperature threshold set by the customer, the FTSE assumes priority and loses the connectet valves or air dampers continuously until the final shut-off point is reached - regardless of the given input voltage.

Furthermore, the current temperature measurement can sent via the output to, e.g., an external temperature display.
The FTSE is equipped with a housing head heater as a standard feature. Down to a temperature of -15 °C, this heater keeps the head at a temperature of +15 °C and thus guarantees perfect operation even at low temperatures. In order to prevent repeat and frequent switching on and off during the warm-up phase, the FTE features a warm-up function which ensures that the heating valve for air damper is first completely opened via the 0...10V output before the relay contact has the chance to shutt off the entire installation.

All settings on the thermostat can be carried out using two pushbuttons accessible after und-screwing a small cover screw. It is not necessary to remove the power supply before carrying out adjustments. The FTSE allows both the switch-point and the operating mode to be selected. The switch-point can be set to between 1 and 10 °C. One has the choice of an operating mode with or without restart lock-out. When selecting the operating mode with restart lock-out, after the set switch-point is reached, the thermostat is locked until manually reset by pushbutton (however, this is possible only after the temperature has dropped by the switching differential of approx. 2 K). One can also reset the device by removing it from the power supply.

Models

Model	Capillary length	IP
FTSE20	2 m	42
FTSE60	6 m	42

Electric terminal

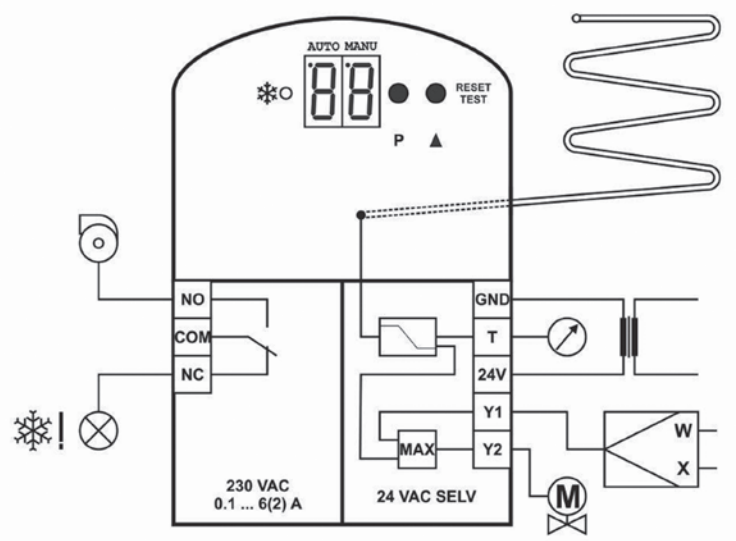

Dimensioned drawing (in mm)

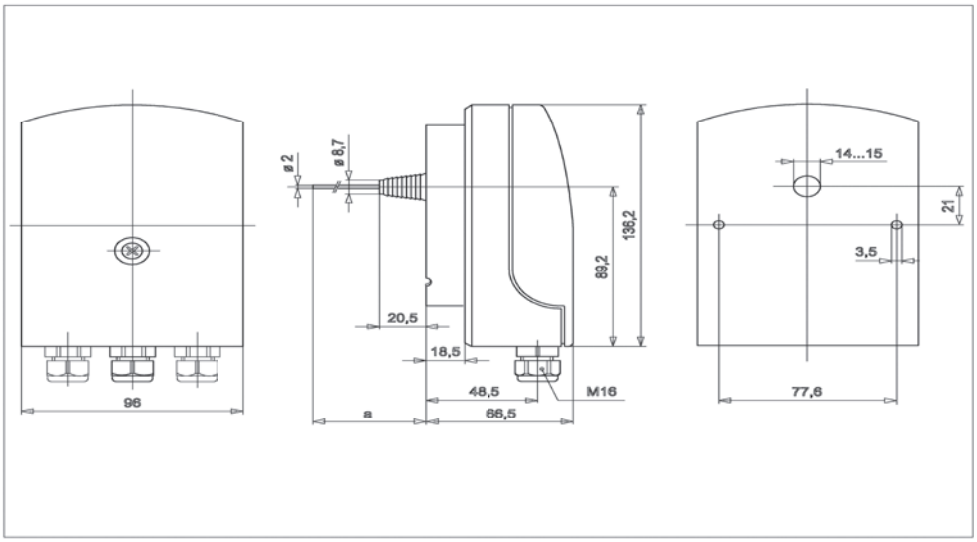

Accessoires:

Incl. in delivery:

Brackets for capillary	6 pcs. for FTSE60
	3 pcs. for FTSE20
Cable entry	2 pcs., M 16x1.5
Screws for direct cable entry	2 pcs.
Protective sleeve for capillary	1 pcs.

Optional parts:
1 mounting flange, reinforced polyamide

Liquids and gases

TAM813

TAM

Capillary tube thermostats with 1.5 m capillary tube

The sensor cartridge at the end of the capillary tube is the actual active (temperature-sensitive) part of the sensor. Changes in temperature on the capillary tube have no effect on the switching point. Pressure-tight installation of the sensor in pressure vessels of all kinds is possible with the aid of an immersion well.

➔ p. 114
Ex ➔ p. 121

Liquids and gases

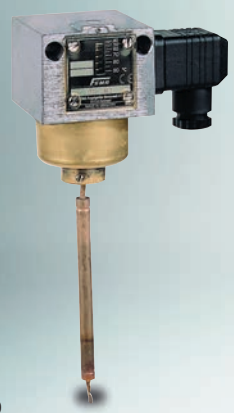

TX490

TX

Rod thermostats (without immersion well)

Rod thermostats are suitable for direct installation in tanks, pipelines and air ducts. The immersion wells can be fitted in advance. Select immersion wells R…from the table on page 150.

➔ p. 115
Ex ➔ p. 120

Liquids and gases

STW70130

STW/STB

Safety strap-on thermostats

Self- monitoring sensor systems for temperature monitoring and limiting tasks, e.g., for floor-heating applications.
If the sensor is damaged, i.e., if the expansion fluid in the capillary tube leaks, the strap-on thermostat responds as though the temperature has exceeded the set-point and will thus switch to the safety setting (e.g., will switch off the circulation pump). To ensure reliable functioning, the surface of the pipe must be thoroughly cleaned of contamination, rust, paint, etc. Each thermostat is delivered together with a strap allowing attachment to pipes having a diameter of up to 100 mm. Additionally, the thermostat can be mounted to walls using the capillary. An optional immersion well allows use as an immersion sensor. This demonstrates the great versatility of this innovative device, which is also reflected in the small quantity of stock kept on hand by customers. Among the innovative features of this device are its automatic temperature compensation and the Push-In® contacts for quick wiring. The devices are CE-approved and certified and also certified according to Pressure Equipment Directive DIN EN14597.

➔ p. 116

Tested to PE Directive 2014/68/EU

STB+TW

STB

Temperature monitors, temperature limiters, type tested

Temperature monitors and temperature limiters are tested according to Pressure Equipment Directive 2014/68/EU, meet the requirements of DIN EN 14597 and can thus be used for heating systems according to DIN EN 12828, for steam and hot water systems and for district heating systems. The devices with safety function (STW, STB) are self-monitoring, i.e. in the event of breakage or leaks in the measuring system the circuit is opened and the system is switched off towards the safe side.

➔ p. 118

TAM813

TAM

Capillary tube thermostats with 1.5 m capillary tube

The sensor cartridge at the end of the capillary tube is the actual active (temperature-sensitive) part of the sensor. Changes in temperature on the capillary tube have no effect on the switching point. Pressure-tight installation of the sensor in pressure vessels of all kinds is possible with the aid of an immersion well.

SIL 2 according IEC 61508-2

Technical data

Body	Diecast aluminium GD Al Si 12 according to DIN 1725.
Mounting position	Any, preferably vertical
Max. ambient temperature at switching device	+70°C
Capillary tube	Cu capillary tube, 1.5 m long Other capillary tube lengths are not possible
Sensor cartridge	8 mm Ø, 100 mm long, material: Cu
Contact arrangement	Single pole changeover switch
Switching capacity	8 (5) A 250 VAC
Degree of protection	IP 54 according to DIN EN60529 (with vertical installation)
Mounting	Temperature sensor with or without immersion tube in containers, air ducts etc. Switching device with 2 screws (Ø 4) directly on a flat wall surface
Calibration	Scale value corresponds to the lower switching point (with falling temperature), the upper switching point is higher by the amount of the switching differential
Plug connection	Via angled plug to DIN EN175301
Switching temperature	Adjustable via the setting spindle with a screw-driver
Switching differential	Not adjustable

Product Summary

Type	Setting range	Switching differential (Tolerance)	Max. permissible temperature at sensor
TAM022	–20 to + 20 °C	0,8 ... 2,5 K	110 °C
TAM150	+10 to + 50 °C	0,8 ... 2,5 K	110 °C
TAM490	+40 to + 90 °C	1 ... 4 K	125 °C
TAM813	+80 to +130 °C	2 ... 8 K	150 °C

* 2,5 K in range:: 90 – 130 °C, 6 K in range:: 80 – 90 °C

Ex **-TAM** see page 121

Accessories

Immersion tube type … R 1, R 2, R 3, RN 1, RN 2, see page 148.

Dimensioned drawing (mm)

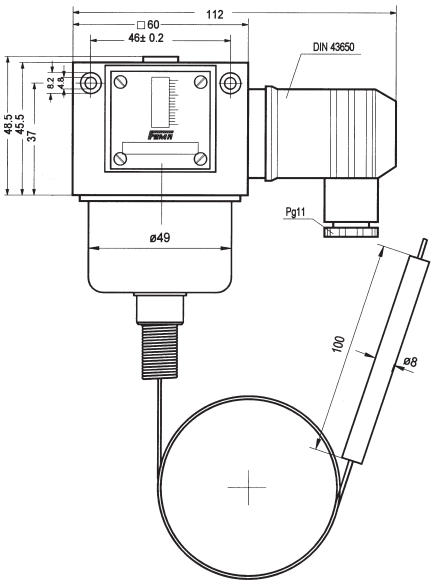

Note to non-available items:
In our article master all the possibe technical combinations are not created. Therefore we recommend the previous request for clarification and selection of an alternative solution.

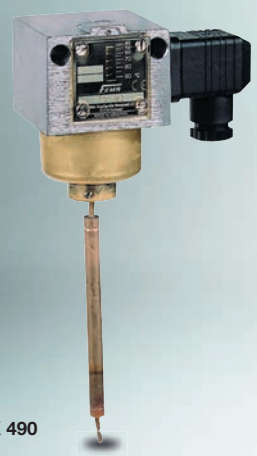

TX 490

TX

Rod thermostats (without immersion tube)

Rod thermostats are suitable for direct installation in tanks, piplines and air ducts. The immersion well can be fitted in advance.

SIL 2 according IEC 61508-2

Technical data

Housing	Diecast aluminium GD Al Si 12 according to DIN 1725.
Mounting position	Any, preferably vertical
permitted. ambient temperature at switching device	+70°C
Max. perm. temperature at sensor	See Product Summary
Contact arrangement	Single pole changeover switch
Switching capacity	8 (5) A 250 VAC
Degree of protection	IP 54 according to DIN EN60529 (with vertical installation)
Calibration	Scale value corresponds to the lower switching point (with falling temperature), the upper switching point is higher by the amount of the switching differential
Plug connection	Via angled plug to DIN EN175301 (3-pin + earth contact), cable entry Pg 11, max. cable diameter 10 mm, cable outlet possible in 4 directions spaced 90° apart. Supplied with plug.
Switching temperature	Adjustable from outside with screwdriver
Switching differential	Not adjustable

Product Summary

Type	Setting range	Switching differential (Tolerance)	Max. permissible temperature at sensor
Immersion depth L =135 mm			
TX023	–20 to + 30 °C	0,8 ... 2,5 K	110 °C
TX150	+10 to + 50 °C	0,8 ... 2,5 K	110 °C
TX490	+40 to + 90 °C	0,7 ... 3,5 K	125 °C
Immersion depth L = 220 mm			
TXB023	–20 to + 30 °C	0,8 ... 2,5 K	110 °C
TXB150	+10 to + 50 °C	0,8 ... 2,5 K	110 °C
TXB490	+40 to + 90 °C	0,7 ... 3,5 K	125 °C

-TX see page 120

Accessories

Immersion tube type R10/MS, R20/MS, R10/NST, R20/NST, RN20/MS, RN10/NST, RN20/NST, R6, R7
see page 148.

Dimensioned drawing (mm)

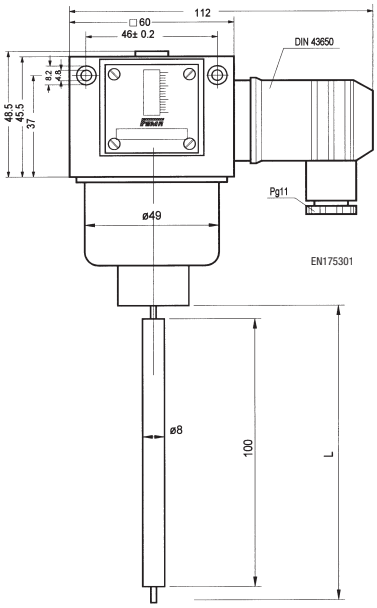

Note to non-available items:
In our article master all the possibe technical combinations are not created. Therefore we recommend the previous request for clarification and selection of an alternative solution.

Protection Class:
IP 54

STW70130

STW / STB

Safety strap-on thermostats

Self- monitoring sensor systems for temperature monitoring and limiting tasks, e.g., for floor-heating applications.

If the sensor is damaged, i.e., if the expansion fluid in the capillary tube leaks, the strap-on thermostat responds as though the temperature has exceeded the set-point and will thus switch to the safety setting (e.g., will switch off the circulation pump). To ensure reliable functioning, the surface of the pipe must be thoroughly cleaned of contamination, rust, paint, etc. Each thermostat is delivered together with a strap allowing attachment to pipes having a diameter of up to 100 mm. Additionally, the thermostat can be mounted to walls using the capillary. An optional immersion well allows use as an immersion sensor. This demonstrates the great versatility of this innovative device, which is also reflected in the small quantity of stock kept on hand by customers. Among the innovative features of this device are its automatic temperature compensation and the Push-In® contacts for quick wiring. The devices are CE-approved and certified according to Pressure Equipment Directive DIN EN 14597.

Technical data

Switch-point accuracy

STW/STB2080	0/-8K
STW/STB70130	0/-12K
Switch deviation	max. ±5 K during lifetime

Temperature limits

Storage/transport temp.	-30/+80 ºC
Operating temperature	-30/+80 ºC
Max. overload temperature	10K above max. temp. setpoint

Electrical Data

Max. switching capacity	16 (2,5) A / 230V
Min. switching capacity	100mA / 24VACDC
Wiring terminals	Push-In® plug contact
Wire cross section	0,75–2,5 mm²
Cable entry	M 20 x 1,5 (6–12 mm)
Protection level:	IP 54 as per EN 60529

Mechanical data

Housing materials	PA, ABS, PMMA
Pipe diameter	up to 100 mm
Mounting position	NL0...90 as per DIN 16257
Sensor bulb	Ø 6 mm dia, 45 mm long, material: CU
Remote capillary	cooper, 2 m
Weight	200 g
Approvals	DIN, DGR, CE

Wiring diagram

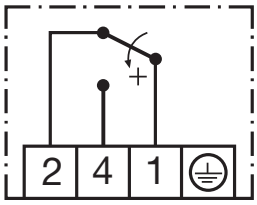

STW

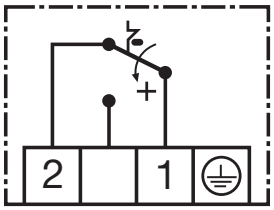

STB

Type	Setting range	Application	Switching differential	Reset
STW2080	20–80 °C	monitoring	10 K	auto
STB2080	20–80 °C	limiter	10 K	manual
STW70130	70–130 °C	monitoring	10 K	auto
STB70130	70–130 °C	limiter	10 K	manual

STW2080 and STW70130 safety temperature monitor

If the sensor temperature exceeds the set value, a snap-action switch opens, interrupting the electrical circuit. As soon the sensor temperature drops by more than 10 K, the snap-action switch again closes automatically. If the measurement system is damaged, i.e., if the expansion fluid in the capillary tube leaks, the switch will open and remain open (resetting no longer possible). Also, if the sensor temperature drops below approx. -20 °C, the snap-action switch opens, but closes again automatically after the temperature rises again.

STB2080 and STB70130 safety temperature limiter

If the sensor temperature exceeds the set value, a snap-action switch opens, interrupting the electrical circuit, and remains open until reset manually. To manually reset the device, the sensor temperature must drop by more than 10 K. If the measurement system is damaged, i.e., if the expansion fluid in the capillary tube leaks, the switch will open and remain open (resetting no longer possible). Also, if the sensor temperature drops to below approx. -20 °C, the snap-action switch opens, but closes again automatically after the temperature rises again.

Type	Immersion well, permitted pressure: 40 bar
STG12-100	G 1/2", 100 mm, ø 8 mm, brass, nickel-plated

Dimensioned drawings (mm)

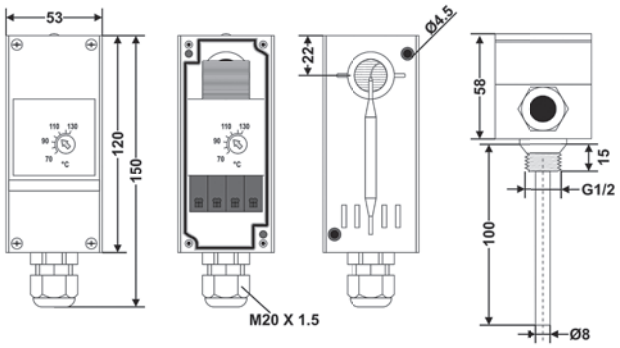

CE

Protection Class:
IP 54

STW1

STB/STW

Temperature monitors, temperature limiters, type-tested

Temperature monitors and temperature limiters are tested according to Pressure Equipment Directive RL2014/68/EU, meet the requirements of DIN EN14597 and can thus be used for heating systems according to DIN EN12828, for steam and hot water systems and for district heating systems. The devices with safety function (STW, STB) are self-monitoring, i.e. in the event of breakage or leaks in the measuring system the circuit is opened and the system is switched off towards the safe side.

Technical data

Body Diecast aluminium with plastic cover.

Immersion tube Brass G 1/2", included with product Stainless steel G 1/2", order separately. Type T4NST or T5NST, see Product Summary

Permitted ambient temperature +80°C at the switching head

Switching point accuracy (in upper third of scale) for STW, STB: ± 5 % for TR: ± 1.5 % (in % of scale range)

Switching differential (in % of scale range) for STW, STB: 4–6%

Lead seal The cover of the switching device can be lead sealed so that the internal settings of the limiter switching points are no longer accessible after sealing.

Switching capacity 10 (2) A, 250 VAC

Degree of protection IP 54

Type	STW1	TWP1	STB1
Function	Safety temperature monitor	Temperature Monitor	Safety temperature limiter
Setting range	20 to 150 °C	20 to 150 °C	60 to 130 °C
Setting	internal	internal	internal
Controls accesible from outside	no	no	Reclosing button
Contact	changeover	changeover	opener contact
Reclosing lockout (internal)	no	no	yes
Max. temperature at sensor	175 °C	175 °C	150 °C
Immersion depth	150 mm	100 mm	150 mm
Permitted pressure, brass immersion tube	40 bar	40 bar	40 bar
Permitted pressure, stainless steel, immersion tube	80 bar, T4NST	80 bar, T4NST (150 mm)	80 bar, T4NST

Immersion wells, stainless steel, 1.4571, G1/2", ø 8 mm

Temp. monitor, temp. limiter	Immersion depth	Type
STW1, TWP STB1	150 mm	**T4NST**

STB1

Connection schemes:

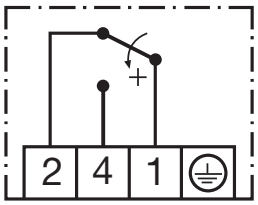

STW, TWP

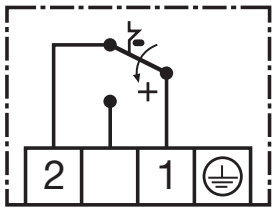

STB

Dimensioned drawings (mm)

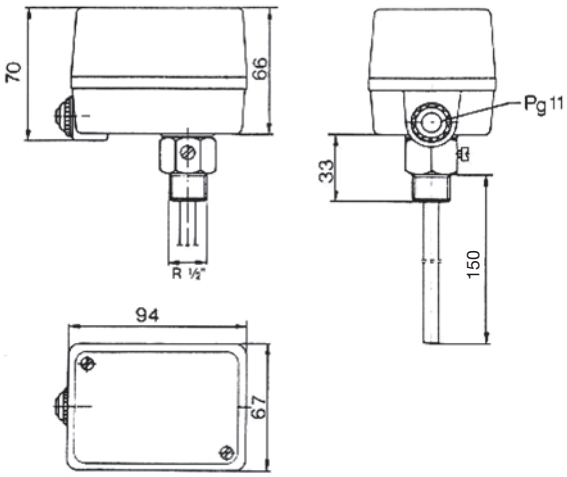

Protection Class: IP 54

STB+TW

STB/STW

Temperature monitors, temperature limiters, type-tested

Temperature monitors and temperature limiters are tested according to Pressure Equipment Directive 2014/68/EU, meet the requirements of DIN EN14597 and can thus be used for heating systems according to DIN EN12828, for steam and hot water systems and for district heating systems. The devices with safety function (STW, STB) are self-monitoring, i.e. in the event of breakage or leaks in the measuring system the circuit is opened and the system is switched off towards the safe side.

Technical data

Body Diecast aluminium with plastic cover.

Immersion tube Brass G 1/2", included with product Stainless steel G 1/2", order separately. Type T5NST, see Product Summary

Permitted ambient temperature +80°C at the switching head

Switching point accuracy (in upper third of scale) for TW, STW, STB: ± 5 % for TR: ± 1.5 % (in % of scale range)

Switching differential (in % of scale range) for TR, TW: 3–4 % for STW, STB: 4–6%

Lead seal The cover of the switching device can be lead sealed so that the internal settings of the limiter switching points are no longer accessible after sealing.

Switching capacity 10 (2) A, 250 VAC

Degree of protection IP 54

Type	STW+TR	STB+TW	STB+TR
Function	Safety temperature monitor and controller	Safety temperature limiter and monitor	Safety temperature limiter and monitor
Setting range	20 to 150 °C	30 to 110 °C	30 to 110 °C
Setting	STW internal TR external	STB internal TW internal	STB internal TR external
Controls accesible from outside	Setting wheel for TR	Reclosing button	Reclosing button and setting wheel for TR
Contact	2 x changeover	NC (STB) and changeover (TW)	NC (STB) and changeover (TR)
Reclosing lockout (internal)	no	yes	yes
Max. temperature at sensor	175 °C	130 °C	130 °C
Immersion depth	150 mm	150 mm	150 mm
Permitted pressure, brass immersion tube	25 bar	25 bar	25 bar
Permitted pressure, stainless steel immersion tube	40 bar T5NST	40 bar T5NST	40 bar T5NST

Immersion wells, stainless steel 1.4571, G1/2", Ø 15mm

Temp. monitor, temp. limiter	Immersion depth	Type
STB+TW STB+TR STW+TR	150 mm	**T5NST**

STW+TR

STB+TR

Connection schemes:
In devices with a dual function there are 2 switching elements. Pay attention to the function of the relevant switch when connecting.

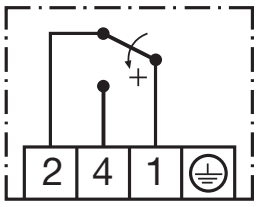

STW, TR, TW

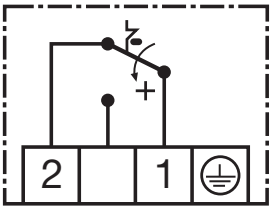

STB

Dimensioned drawings (mm)

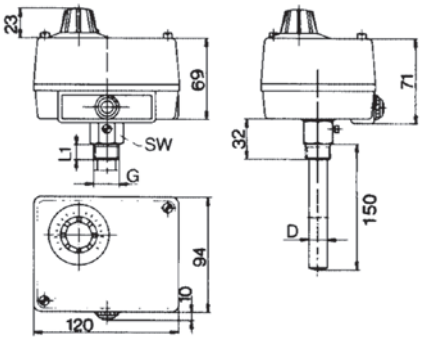

Protection Class: IP 54

Temperature monitoring
in explosion-endangered areas

Temperature switches with special equipment can also be used in explosion risk areas Zone 1, 2 and 21, 22.

The following alternatives are possible:

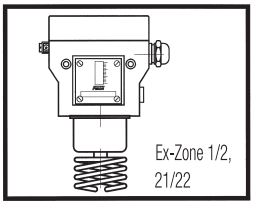

1. Type of ignition protection Ex-d, Ex-e and Ex-t:
The thermostat with protection type "Flameproof Ex-d and Increased Saftey Ex-e" can be used in hazardous areas of zone 1 and 2 for flammable gas mixtures. For use in dust atmospheres, the protection is "prtected by enclosure Ex-t".
The thermostat may be used in hazardous areas of zones 21 and 22 for explosive dusts.
In addition, for the dust – explosion protect zone 20 on the sensor (device screwed into container walls, which may occur in the interior permanent dust atmosphere).
The permissible values for switching voltage, switching capacity and ambient temperature please refer to the detailed description of the Ex equipment, and the installation and operating instructions. In addition, please note the general rules for the use and installation of equipment in hazardous atmosphere.
Special circuits, as well as versions with adjustable switching differential or internal interlock (reclosing lock) are not possible.

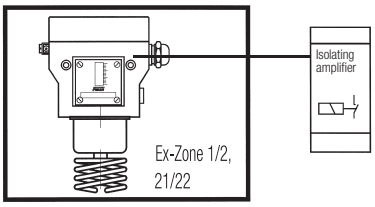

2. Ignition protection Ex-i
All thermostat with features for intrinsically safe circuits can be used in hazardous areas Zone 1 and 2 (Gas) and zones 21 and 22 (Dust). A circuit is considered to be "intrinsically safe" if the amount of energy conveyed therein is not capable of generating an ignitable sparks. This thermostat can only be operated in combination with a suitable isolating switching amplifier, which is approved for the type Ex-i. Because of the low voltages and currents in intrinsically safe circuits, micro switches with gold contacts are used for temperature monitors with automatic reset. FEMA thermostats for use in intrinsically safe circuit are marked by blue terminals and cable entries. In addition, the thermostats has been tested by a "notified body". The units get a serial number and the nameplate inform about the ignition protection and registration number.

Igniton protection for temperature monitoring in Zone 0 (20), 1 (21) and 2 (22)

Pressure-proof encapsulation Ex-d (EN60079-0:2009) Enhanced safety Ex-e (EN60079-7:2007) Protection via housing Ex-t (EN60079-31:2009) Ex-T…	**Intrinsically safe Ex-i (EN 60079-11:2012) T…-513, …-563**
Marking, use in thermowell: CE 0035 Ex II 2G Ex d e IIC T6 Gb CE 0035 Ex II 1/2D Ex ta/tb IIIC T80°C Da/Db Exception: EX-TRM…: CE 0035 Ex II 2G Ex d e IIC T6 Gb CE 0035 Ex II 2D Ex tb IIIC T80°C Db	Marking: CE 0035 Ex II 2G Ex ia IIC T6 Gb CE 0035 Ex II 2D Ex ia IIIC T80°C Db
ATEX approval for the complete switching device	ATEX approval for the complete switching device ATEX approval for isolating amplifiers
Thermostat with a silver contact	Monitor with gold-plated contacts
Switching capacity: max. 3 A, 250 VAC min. 2 mA, 24 VDC	Rated value without resistor combination …-513 /…-563: Ui: 24VDC Ii: 100mA Ci: 1nF Li: 100µH
Thermostat can be installed within the Ex-Zone	Thermostat will be installed in Ex-Zone. The isolating amplifier must be installed outside the Ex-Zone.

Ex-TX490

Ex-TX

Protection class with immersion tube:

II 2G Ex d e IIC T6 Gb

II 1/2D Ex ta/tb IIIC T80 °C Da/Db

Rod thermostats are suitable for direct installation in tanks, pipelines and air ducts. The immersion wells can be fitted in advance.

SIL 2 according IEC 61508-2

Technical data

Housing	Diecast aluminium GD Al Si 12 according to DIN 1725.
Mounting position	vertically upright
Permitted ambient temperature at switching device	-20...+60°C
Permitted temperature at sensor	See Product Summary
Contact arrangement	Single pole changeover switch
Switching capacity	8 (5) A 250 VAC
Degree of protection	IP 65 according to DIN EN60529 (with vertical installation)
Calibration	Scale value corresponds to the lower switching point (with falling temperature), the upper switching point is higher by the amount of the switching differential
Switching temperature	Adjustable from outside with screwdriver
Switching	Not adjustable

Product Summary

Type	Setting range	Switching differential (Tolerance)	Max. permissible temperatur
Immersion depth 135 mm			
Ex-TX023	–20 to + 30 °C	0,5 ... 1,0 K	110 °C
Ex-TX150	+10 to + 50 °C	0,4 ... 1,5 K	110 °C
Ex-TX490	+40 to + 90 °C	0,2 ... 3,0 K	125 °C
Immersion depth 220 mm			
Ex-TXB023	–20 to + 30 °C	0,5 ... 1,0 K	110 °C
Ex-TXB150	+10 to + 50 °C	0,4 ... 1,5 K	110 °C
Ex-TXB490	+40 to + 90 °C	0,2 ... 3,0 K	125 °C

Accessories

Immersion tube type R10/MS, R20/MS, R10/NST, R20/NST, RN20/MS, RN10/NST, RN20/NST, R6, R7 see page 148.

Dimensioned drawings (mm)

Switching housing 700 (terminal connection, Ex-d)

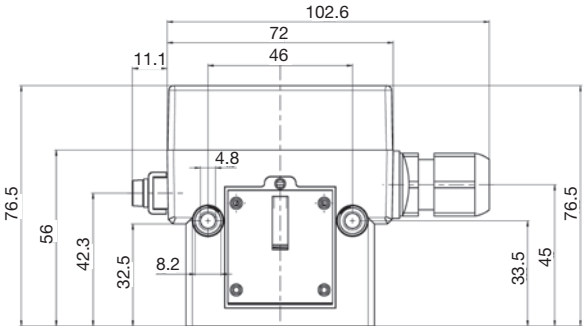

Switching housing

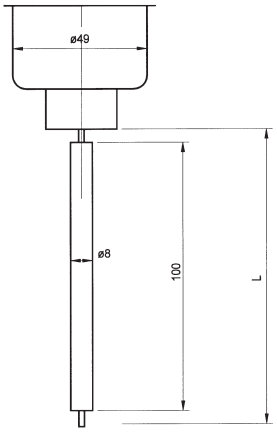

Temperature sensor

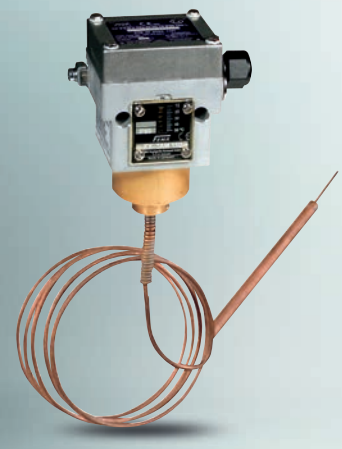

Ex-TAM813

Ex-TAM

Protection class with immersion tube:

II 2G Ex d e IIC T6 Gb

II 1/2D Ex ta/tb IIIC T80 °C Da/Db

The sensor cartridge at the end of the capillary tube is the actual active (temperature-sensitive) part of the sensor. Changes in temperature on the capillary tube have no effect on the switching point. Pressure-tight installation of the sensor in pressure vessels of all kinds is possible with the aid of an immersion well.

SIL 2 according IEC 61508-2

Technical data

Body	Diecast aluminium GD Al Si 12 according to DIN 1725.
Mounting position	vertically upright
Permitted ambient temperature at switching device	–20 to +60 °C
Capillary tube	Cu capillary tube, 1.5 m long Other capillary tube lengths are not possible
Sensor cartridge	8 mm Ø, 100 mm long, material: Cu
Contact arrangement	Single pole changeover switch
Switching capacity	8 (5) A 250 VAC
Degree of protection	IP 65 according to DIN EN60529 (with vertical installation)
Calibration	Scale value corresponds to the lower switching point (with falling temperature), the upper switching point is higher by the amount of the switching differential
Switching temperature	Adjustable via the setting spindle with a screwdriver
Switching differential	Not adjustable
Mounting	Temperature sensor with or without immersion tube in containers, air ducts etc. Switching device with 2 screws (Ø 4) directly on a flat wall surface

Product Summary

Type	Setting range	Switching differential (Tolerance)	Max. permissible temperature at sensor
Ex-TAM022	–20 to + 20 °C	0,2 ... 2,0 K	110 °C
Ex-TAM150	+10 to + 50 °C	0,8 ... 2,5 K	110 °C
Ex-TAM490	+40 to + 90 °C	1,0 ... 4,0 K	125 °C
Ex-TAM813	+80 to +130 °C	2,0 ... 8,0 K*	150 °C

* 2,5 K in the range: 90 – 130 °C, 8 K in the range: 80 – 90 °C

Accessories

Immersion tube type … R1, R2, R3, RN1, RN2, page 148.

Dimensioned drawings (mm)

Switching housing 700 (terminal connection, Ex-d)

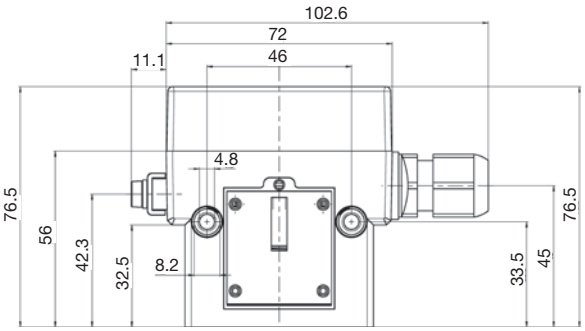

Switching housing

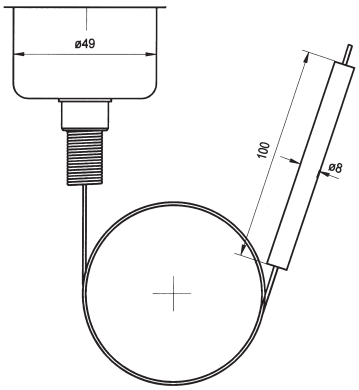

Temperature sensor

Ex-TRM150

Ex-TRM

II 2G Ex d e IIC T6 Gb
II 2D Ex tb IIIC T80 °C Db

FEMA room thermostats are suitable for industrial plants, for greenhouses, livestock buildings and warehouses, and also for monitoring the maximum temperature in switchgear cabinets and relay stations. Room thermostats are supplied complete with wall bracket H1.

SIL 2 according IEC 61508-2

Technical data

Body	Diecast aluminium GD Al Si 12 according to DIN 1725. Resistant to ammoniacal vapours and seawater
Mounting position	vertically upright
Permitted ambient temperature	–20 to +60 °C
Permitted temperature at sensor	60°C
Contact arrangement	Single-pole changeover switch
Switching capacity	8 (5) A 250 VAC
Degree of protection	IP 65 according to DIN EN60529 (with vertical installation)
Mounting	With wall bracket H 1 or directly on the wall with 2 screws (Ø 4)
Calibration	Scale value corresponds to the lower switching point (with falling temperature), the upper switching point is higher by the amount of the switching differential
Switching temperature	Adjustable from outside with screwdriver
Switching differential	Not adjustable

Product Summary

Type	Setting range	Switching differential (Tolerance)
Ex-TRM022	–20 to +20 °C	0,8 ... 2,5 K
Ex-TRM40	0 to +40 °C	3,5 ... 7 K
Ex-TRM150	+10 to +50 °C	3,5 ... 7 K

Dimensioned drawings (mm)

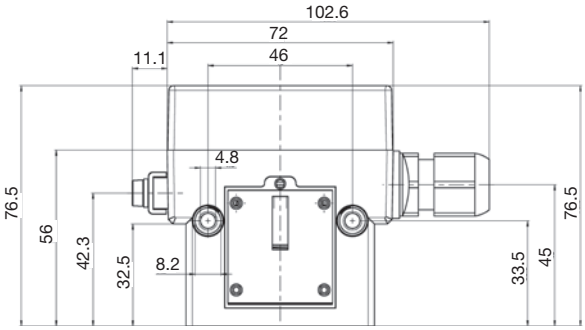

Switching housing

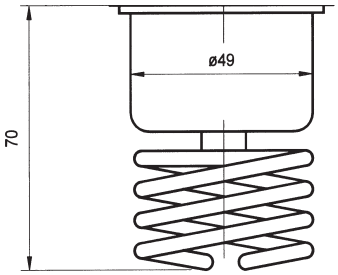

Temperature sensor

ELECTRONIC THERMOSTATS / TRANSMITTERS

FEMA
by Honeywell

Smart Temp TST

Smart Temp TST-R

Electronic thermostat + temperature transmitter

Smart Temp electronic thermostats are used wherever it is necessary to carry out special monitoring tasks combined with switching functions. The device is ideal for two-stage temperature control. Smart Temp is therefore highly suitable for temperature control in mechanical and plant engineering, fluidics, process engineering and pneumatics, and for monitoring and control of heating systems, climatic cabinets, ovens, and cooking systems.

Its open-ended sensor technology means that the range of possible applications is growing all the time. In the TST…-R version, floating switching signals are output via a relay contact. A convenient and configurable analog output transmits critical process temperatures to measurement and control systems.

Technical data

Measuring ranges	-50°C…+400°C
Ambient temperature	-20°C…+60°C
Storage temperature	-35°C…+80°C
Relative humidity	0…95% non-condensing
Overall accuracy	0.5% of full scale
Weight	depends on model
Parts in contact with medium	Built-on sensors: 1.4571, external sensors: depends on model
Process connections	Standard built-on sensor: G 1/2" external thread External sensor connection: M8 plug according to DIN IEC 60947-5-2
Electrical connections	5-pin M 12 plug as per DIN IEC 60947-5-2 (as accessory) Additional 3-pin M12 plug, as per DIN EN 50044 (as accessory)
Sensor element	PT 1000 Class A`
Protection class	II as per EN 60335-1 IP65 as per EN 60529
Climate class	C as per DIN EN 60654
Power supply	14…36 VDC
Outputs	2 open-collector outputs 250 mA at 16…36 VDC Configurable as high-side/low-side switching and as push/pull outputs Switching differential (SP and RP) selectable via software
Relay outputs	Permissible resistive load: 250 VAC, 5 A Permissible inductive load: 250 VAC, 0.8 A (200 VA) Contact type: 1 changeover contact (1 xU M) Maximum service life: 100,000 switching cycles
Warning output	Output configuration: Warning output on plug 2 max. 20 mA, 14...36 VDC
Transmitter output	Voltage/current 0 -10 V and 4…20 mA, configurable in expert mode
Housing and cover	Polybutylene terephthalate PBT-GF30, resistant to chemicals and stress cracking
Display screen cover	Polycarbonate PC

i With an **overall accuracy of 0.5%** of full scale, these electronic thermostats are also suitable for monitoring measurements in laboratory applications. Models with built-on sensors for a temperature range of **-50°C....+200°C** and models with external sensors for a temperature range of **-50°C....+400°C** are available.
Please let us know if you have special sensor requirements.
We have the facilities to make your special sensor for you.

Functions

The 2 switching outputs can be configured as:
- Minimum thermostat, maximum thermostat, temperature window monitoring
- Configurable as normally closed or normally open, high-side or low-side switching and as a push/pull output
- Relay output assigned to channel 1 or 2 or to the warning output

Configuration of the analog output:
- 0-10 V, 4-20 mA or 10-0 V and 20-0 mA
- Analog measuring range can be limited to a minimum of 50 % of the total measuring range
- Choice of temperature unit (°C and °F)

Smart Temp display functions:
- 4-digit digital display with bar graph for temperature, settings and set parameters
- 2 three-colour LEDs to show the switching state of the outputs, implausible settings and as a warning status indicator

Electrical connection:
- Two 5-pin M12 plug connections for power supply, switching outputs and analog output
- One 3-pin M12 plug connection for the relay output
- One 4-pin M8 plug connection for PT1000 Class A sensors (for all TST... EPT series)

Plus (Advantage):
- Switch on/off delay of 0-60 sec.
- Temperature simulation mode, two-stage locking code, restore function
- Warning function for implausible switching points, sensor fault, overload and overheating

Electronic thermostate

Type	Temperature range	Sensor immersion depth (mm)	Sensor design
TST050G12100-R	-50 °C...+50 °C	100	Built-on
TST050G12250-R	-50 °C...+50 °C	250	Built-on
TST200G12100-R	-50 °C...+200 °C	100	Built-on neck-tube
TST200G12250-R	-50 °C...+200 °C	250	Built-on neck-tube
TST200EPT1K-R*	-50 °C...+200 °C	n.a.	Built-on with cable
TST400EPT1K-R*	-50 °C...+400°C	n.a.	Built-on with cable

* Wall-mounting kit for evaluatin unit AST1 included.

External sensors

Type	Temperature range (Pt1000)	Sensor immersion depth (mm)	Cable length	Comment
P2-TVS12-400100	-50 °C...+400°C	100	2,5 m	ST8-3 plug enclosed
P2-TVS12-400250	-50 °C...+400°C	250	2,5 m	ST8-3 plug enclosed

TST ...-R plug requirement (not included)	
- as transmitter	1 x ST12-5-A
- as switch (OC)	1 x ST12-5-A
- as transmitter + switch (OC)	2 x ST12-5-A
- as transmitter + relay	1 x ST12-5-A + 1 x ST12-4-A
- as switch (OC) + relay	1 x ST12-5-A + 1 x ST12-4-A
- as transmitter + switch (OC) + relay	2 x ST12-5-A + 1 x ST12-4-A

Accessories (to be ordered separately)

Cable socket Type			
For output 1+2			
ST12-5-A	5-pin	A-coded	Right-angle version
For output 3 (relay output)			
ST12-4-A	4-pin	B-coded	Right-angle version
ST12-4-AK	4-pin	B-coded	Right-angle version with 2 m cable
ST12-4-GK	4-pin	B-coded	Straight version with 2 m cable
Cover Cap			
STA12			IP 65

Contacting
ST12-4-AK and ST12-4-GK

Relais contact	colour	Contact
1	brown	common
2	white	NC
3	blue	NO
4	green/yellow	n.a.

CE

Protection Class:
IP 65

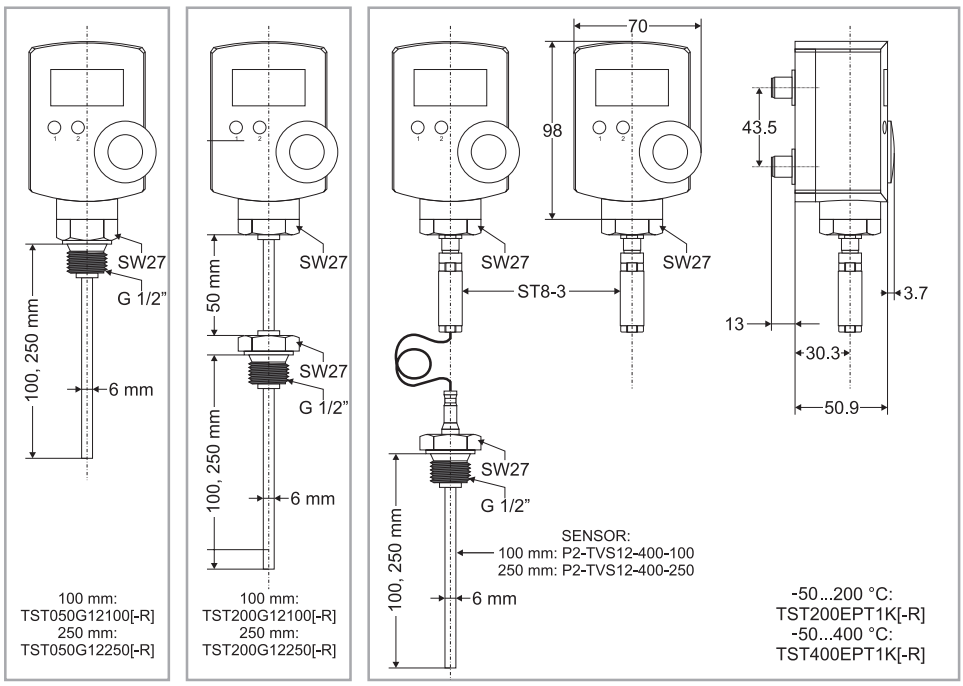

Immersion wells for Smart Temp

Types	Immersed length (mm)	material	Process connection	Comment	Max. perm. pressure
G12-100	100	1.4571/316L	**G1/2“**	Cyl. ext. thread	40
G12-250	250	1.4571/316L	**G1/2“**	Cyl. ext. thread	40

Mounting dimensions for Smart Temp

· Wrench size: AF 27
· Internal thread for insertion sensor: G1/2"
· Immersion tube diameter: 8 x 0.7 mm

Type	A	B	C	D	E	F	Process connection
G12-100	105	36	19	14	15	83	G1/2“
G12-250	255	36	19	14	15	233	G1/2“

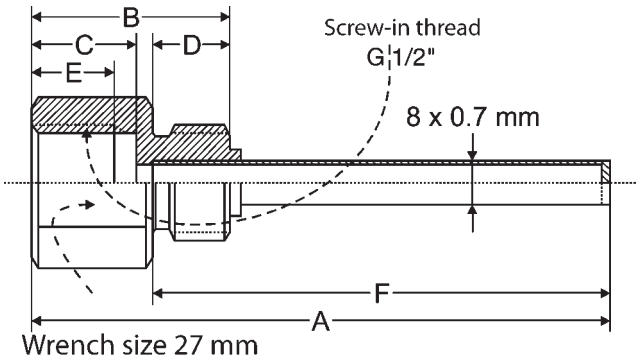

Electrical connection

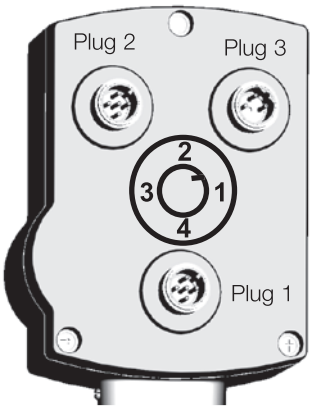

Electrical connection and contact assignment
Electrical connection is via M12 plugs on the back of the unit.
Depending on the version, 3 (TST…-R) M12 connector plugs are available (not supplied with the unit).

Contact assignment on plug 1 (A-coded)
Pin 1: Supply voltage 14…36 VDC
Pin 2: OUT 2 (output 2) open collector output
Pin 3: 0 volt (earth)
Pin 4: OUT 1 (output 1) open collector output
Pin 5: Serial interface (locked for calibration)

Special characteristic of open collector outputs
Depending on the design, the output voltage at open collector outputs can be up to 2.5 V lower than the applied supply voltage.
Example: Supply voltage 14 V… Output voltage OUT 1 approx. 11.5 V.

Contact assignment on plug 2 (A-coded)
All versions of series TST and TST…-R are also equipped with an A-coded M 12 plug.
Pin 1: Supply voltage 14…36 VDC
Pin 2: WARN (warning output max. 20 mA)
Pin 3: 0 V (earth)
Pin 4: Analogue output AOUT
Pin 5: Serial interface (locked for calibration)

Units of the TST series can be powered both via plug 1 and via plug 2. If the TST is used purely as a transmitter, only one connection via plug 2 is needed, because the supply voltage can be connected here too (see "Contact assignment on plug 1").

Contact assignment on plug 3 (B-coded)
All versions of series TST....-R are also equipped with a B-coded M 12 plug.
Pin 1: Common contact
Pin 2: Normally closed contact
Pin 3: Normally open contact

Switch outputs

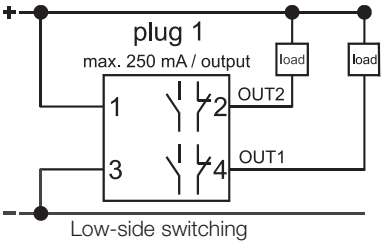

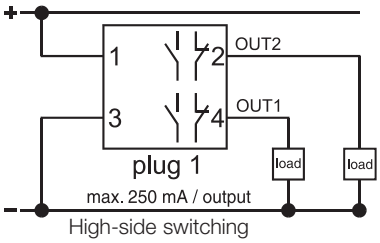

Switch output OUT1 and OUT2
The switch outputs can be configured via the software (at expert level) both as normally closed / normally open, and as high-side and low-side switching.
In **normally closed configuration**, the selected voltage potential (earth or supply voltage) occurs at the output in the **unswitched** state.
In **normally open configuration**, the selected voltage potential (earth or supply voltage) occurs at the output in the **switched** state.
In the **low-side switching configuration**, the outputs switch the voltage potential 0V (earth) with respect to a consumer connected to OUT1 or OUT2.
In the **high-side switching configuration**, the outputs switch the supply voltage potential (minus approx. 2V) with respect to a consumer connected to OUT1 or OUT2.
If the power supplies of the pressure switch and connected load are independent of one another, the following must be taken into account: The potential difference between OC output and earth and OC output and supply voltage must not exceed 36 VDC. If the configuration is "low-side switching", the external power supply must have the same earth reference as the device itself. If the device is defined as "high-side switching", the external power supply must be connected to the positive power supply of the device. It is important to note that the voltage drop in the through-connected state can be as much as 2 V.
The maximum permitted current at the OC is 250 mA per switch output (OUT1, OUT2).
A maximum switching current of 250 mA may flow through each channel.
The switching channels are short-circuit-proof and they are monitored for current and temperature. Where current limiting is used and on overheating, both LEDs light up red (WARN function).

Plug 3

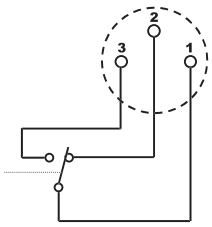

Relay output REL
The relay output is realised in version **TST…-R**. In expert mode the analogue output can be coupled via the software with output 1 (OUT1) and output 2 (OUT2), and with the WARN function. This means that the user can choose a potential-free output for these 3 important functions. The changeover contact of the relay is designed for a maximum resistive load of 4A and an inductive load of 200VA. At the lower end the 5µ gold-plated silver contacts are designed for a minimum load of 50 mW (5 V at 10 mA).
It should always be remembered that, after a one-off maximum load on the switching current side, the gold plating of the contacts is stripped so they can no longer be used for low-current and low-voltage applications.

Analogue output

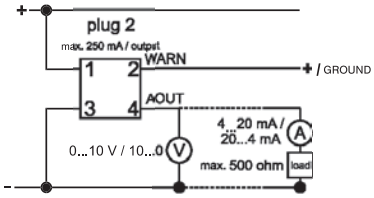

Analogue output
The analogue output (AOUT) is available in version TST…-R. In expert mode it is configurable both as a 0-10 V/10-0 V, and as a 4-20 mA/20-4 mA output. The unit is supplied with the output configured for 0-10 V.
The input impedance of the connected consumer **must not exceed 500 ohms**.

TEMPERATURE SENSORS

FEMA
by Honeywell

General notes on temperature measurement

with resistance sensors Pt 100 and Pt 1000

Connection possibilities for Pt... sensors

Two-wire connection

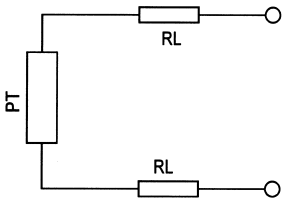

Advantage: Only 2 wires
Disadvantage: The line resistance RL distorts the measurement result

Three wire connection

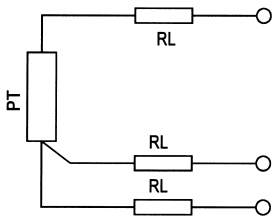

Advantage: The line resistances are taken into account by the electronic analyser. The measurement result is not distorted.
Disadvantage: 3 wires are needed. All 3 wires must have the same resistance.

Four-wire connection

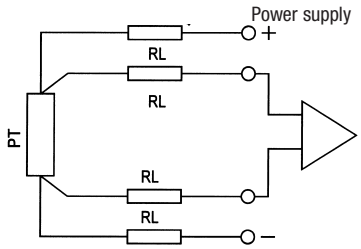

Advantage: The line resistances do not play any role due to the electronic analyser (current feed and high-ohmic voltage sensing). The measurement result is not distorted. The lines can have different resistances.
Disadvantage: 4 wires are needed.

Connection wires with the same colours are electrically connected to one another.

Platinum temperature sensors Pt 100 or Pt 1000 make use of the constant change in resistance of materials at changing temperatures. A platinum-rhodium alloy specially suited to this purpose is normally used because of its good stability and high reproducibility.
The resistance of the sensor increases as the temperature rises.

The resistance values are stipulated in DIN IEC 751 as follows:
Pt 100 = 100 ohms at 0°C
Pt 1000 = 1000 ohms at 0°C

The resistance values for all temperatures are quoted in the above-mentioned standard.
The resistance sensors are divided into accuracy classes according to their limiting error.

For FEMA Pt 100/1000 sensors, Class A applies: 0.15 K + 0.002 x t*
*t is the numerical value of the temperature in °C (disregarding the sign)

Resistance values of Pt 100 sensors (except from DIN 43 760, IEC 751)

Temperature °C	Basic values of Pt 100 0	1	2	3	4	5	6	7	8	9	10	Temperature °C
– 50	80,31	79,91	79,51	79,11	78,72	78,32	77,92	77,52	77,13	76,73	76,33	– 50
– 40	84,27	83,88	83,48	83,08	82,69	82,29	81,89	81,50	81,10	80,70	80,31	– 40
– 30	88,22	87,83	87,43	87,04	86,64	86,25	85,85	85,46	85,06	84,67	84,27	– 30
– 20	92,16	91,77	91,37	90,98	90,59	90,19	89,80	89,40	89,01	88,62	88,22	– 20
– 10	96,09	95,69	95,30	94,91	94,52	94,12	93,73	93,34	92,95	92,55	92,16	– 10
0	100,00	99,61	99,22	98,83	98,44	98,04	97,65	97,26	96,87	96,48	96,09	0
0	100,00	100,39	100,78	101,17	101,56	101,95	102,34	102,73	103,12	103,51	103,90	0
10	103,90	104,29	104,68	105,07	105,46	105,85	106,24	106,63	107,02	107,40	107,79	10
20	107,79	108,18	108,57	108,96	109,35	109,73	110,12	110,51	110,90	111,28	111,67	20
30	111,67	112,06	112,45	112,83	113,22	113,61	113,99	114,38	114,77	115,15	115,54	30
40	115,54	115,93	116,31	116,70	117,08	117,47	117,85	118,24	118,62	119,01	119,40	40
50	119,40	119,78	120,16	120,55	120,93	121,32	121,70	122,09	122,47	122,86	123,24	50
60	123,24	123,62	124,01	124,39	124,77	125,16	125,54	125,92	126,31	126,69	127,07	60
70	127,07	127,45	127,84	128,22	128,60	128,98	129,37	129,75	130,13	130,51	130,89	70
80	130,89	131,27	131,66	132,04	132,42	132,80	133,18	133,56	133,94	134,32	134,70	80
90	134,70	135,08	135,46	135,84	136,22	136,60	136,98	137,36	137,74	138,12	138,50	90
100	138,50	138,88	139,26	139,64	140,02	140,39	140,77	141,15	141,53	141,91	142,29	100
110	142,29	142,66	143,04	143,42	143,80	144,17	144,55	144,93	145,31	145,68	146,06	110
120	146,06	146,44	146,81	147,19	147,57	147,94	148,32	148,70	149,07	149,45	149,82	120
130	149,82	150,20	150,57	150,95	151,33	151,70	152,08	152,45	152,83	153,20	153,58	130
140	153,58	153,95	154,32	154,70	155,07	155,45	155,82	156,19	156,57	156,94	157,31	140
150	157,31	157,69	158,06	158,43	158,81	159,18	159,55	159,93	160,30	160,67	161,04	150
160	161,04	161,42	161,79	162,16	162,53	162,90	163,27	163,65	164,02	164,39	164,76	160
170	164,76	165,13	165,50	165,87	166,24	166,61	166,98	167,35	167,72	168,09	168,46	170
180	168,46	168,83	169,20	169,57	169,94	170,31	170,68	171,05	171,42	171,79	172,16	180
190	172,16	172,53	172,90	173,26	173,63	174,00	174,37	174,74	175,10	175,47	175,84	190
200	175,84	176,21	176,57	176,94	177,31	177,68	178,04	178,41	178,78	179,14	179,51	200

The resistance values of Pt 1000 are higher by a factor of ten.

When Pt sensors are connected, the line resistances between the measuring point and evaluation unit (e.g. transmitter) must be taken into account (see left column).
All FEMA evaluation units (transmitters and temperature switches) have an input circuit for 3-wire connection. The sensors must be connected as shown in the following diagrams. All three wires must be of equal length and have the same conductor cross-section to compensate for the line resistances.

Two-wire sensor

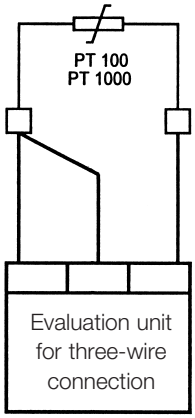

Three-wire sensor

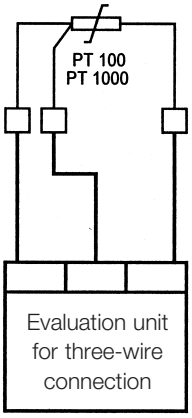

Four-wire sensor

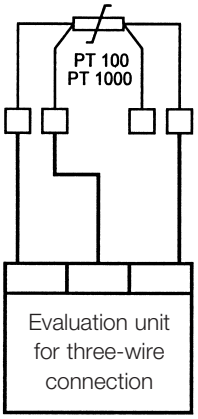

P100

P

Pt 100 temperature sensors in stainless steel

The temperature sensors are made entirely from stainless steel 1.4571. Sensor element: Pt 100, Class A to DIN IEC 751, 3-wire connection. Temperature range –50…+400 °C.

Technical Data

Housing and cover	Stainless steel 1.4571/ 316Ti
Parts in contact with medium	Stainless steel 1.4571/ 316Ti
Temperature of medium	-50...+400 °C
Process connection	G1/2" external thread
Electrical connection	
P100...	screw clamp on ceramic base
Cable entry	M16x1.5 screw clamp
Cable diameter	ø 6–9 mm
Protection rating	IP 67 (when connected properly)
Max. permissible pressure	100 bar
Response time	$\tau_{0.9}$ = 12 sec (in water at 0,4 m/s)

Immersion sensors with screw-in thread G1/2", 6 mm ø

Type	Max. permissible pressure (bar)	Immersion depth L (mm)
P100-100	100	100
P100-150	100	150
P100-200	100	200
P100-250	100	250

Immersion wells (screw-in threat G1/2") 1.4571/316Ti

Type	Immersion depth	Thread	Max. permissible pressure (bar)
G12-100	100	G1/2“	40
G12-250	250	G1/2“	40

Dimensioned drawing (mm)

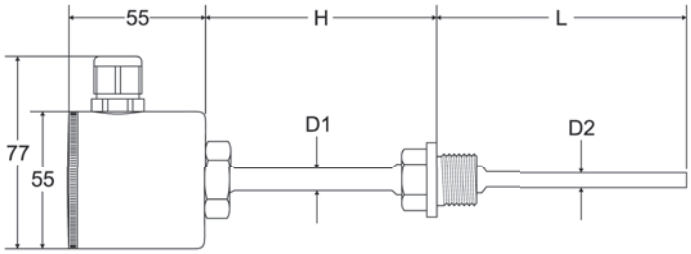

L (Fitting length)	D1 (Protection tube ø)	D2 (Protection tube ø)	H (Protection tube)
100 mm	9 mm	6 mm	70 mm
150 mm	9 mm	6 mm	70 mm
200 mm	9 mm	6 mm	70 mm
250 mm	9 mm	6 mm	70 mm

CE

Protection Class: IP 67

Specifications

TRM/TRMV
Room thermostats for industrial premises, type TRM,
setting range from … to …°C.
Switching differential not adjustable / adjustable.
Diecast aluminium with plug connection to DIN EN175301.

T6120
Room thermostats for industrial rooms type T6120 …
setting range from … till … °C.
Switching differential adjustable / fixed.
Switching housing made of ABS, fibre glass armoured.

H6045A1002
Duct hygrostat, setting range 35 … 100% r.h.
Switching housing made of ABS, fibre glass armoured.

H6120A1000
Duct hygrostat, setting range 35 … 100% r.h.
Switching housing made of ABS, fibre glass armoured.

STW
Safety temperature switch
Setting range from … till … °C, switching differential fixed.
Approved according to PED 2014/68/EU.
Approved acc. to DIN EN14597 and therefore permitted for use in heating installations acc. to DIN EN12828.

STB
Safety temperature limiter
Setting range from … till … °C, switching differential fixed.
Approved according to PED 2014/68/EU.
Approved acc. to DIN EN14597 and therefore permitted for use in heating installations acc. to DIN EN12828.

TWP
Temperature Monitor
Range: 20..150 °C, Switching differential not adjustable
Approved according to PED 2014/68/EU and therefore permitted for use in heating installation according to DIN EN 12828

FT69
Frost protection thermostat for air heating- and conditioning.
Setting range -8°C … +8 °C, set point at +5°C falling,
Capillary length: … m, reset manually / automatically,
Switching housing: ABS and polycarbonate.

TAM
Capillary tube thermostat type TAM… range of adjustment from … to …°C. Capillary tube length 1.5 m,
diecast aluminium with plug connection to DIN 175301.

TX
Rod thermometer type TX …, range of adjustment from … to …°C. Immersion depth 135 mm / 220 mm,
diecast aluminium housing with plug connector to DIN 175301.

STB+TWF/STB+TR
Safety temperature limiter and control / monitoring.
Setting range from … till … °C, switching differential fixed.
Approved according to PED 2014/68/EU.
Approved acc. to DIN EN14597 and therefore permitted for use in heating installations acc. to DIN EN12828.

TST…-R
Electronic thermostat and temperature transmitter
with 2 open collector switching contacts and
analogue output signal and potential free relay output.
Power supply 14-36V DC, protection class IP65, switching points are free adjustable, setting range: … till … °C,
immersion depth … mm.
Free programmable analogue output signal 4 … 20mA or 0 … 10V (also invertible).

P
Temperature sensor Pt100, stainless steel made (1.4571).
Protection class IP67, PT100, class A acc. to DIN IEC751.
3-wire connection, cable entry M16x1.5.
Setting range -50 … +400 °C, immersion depth … mm.

FTSE
Electronic frost protection thermostat for air heating and climate control with analog signal output 0-10 V.
Power supply 24 VAC, measuring range 0 ... 15 °C, Setting range (limit switch) 1 ...10 °C, campillary length: ...m, Housing materials: ABS, Polycarbonate (transparent) and Polyaimde (silver gray)

FLOW MONITORS

FEMA
by Honeywell

Ventilation and air-conditioning systems

S6040

S6040

Flow monitoring in ventilation systems

Air flow monitor S6040A1003 is suitable for flow monitoring of air and non-aggressive gases in ducts of air-conditioning and air-purification systems.

➔ p. 136

Ventilation and air-conditioning systems

KSL230

KSL

Air flow monitoring, compact design

Air flow sensors are suitable for air and all non-combustible and non-aggressive gases. They are used in ventilation and air conditioning systems. While the fan starts up the switch-on bypass is active. The bypass duration (2 – 60 s) is adjustable.

➔ p. 137

Ventilation and air-conditioning systems

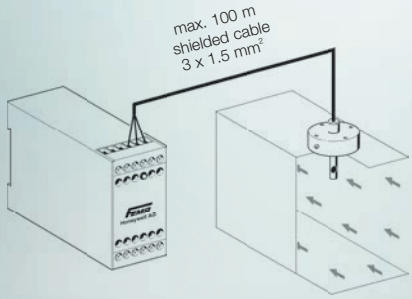

SWL

Air flow monitoring

SLF sensor can be used in combination with an ASL… evaluation device to monitor the flow in the air (e.g. in air-conditioning systems). The switching point is adjustable. While the fan starts up the switch-on bypass is active. The bypass duration (2 – 60 s) is adjustable.

➔ p. 138

TÜV-tested according to notice "Strömung 100"

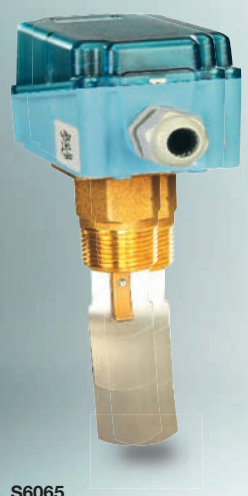

S6065

S6065

Flow monitoring for liquid media

The flow monitors tested according to notice "Flow 100" of series S6065A are particularly suitable for flow monitoring of coolants in air-conditioning and refrigeration systems. Version V4A is also suitable for monitoring aggressive liquids.

➔ p. 139

Liquids and gases

KSW230

KSW

Flow monitoring, compact design

These compact flow sensors are suitable for the monitoring of cooling circuits (up to 35% glycol) and heating circuits and for the aggressive media to which their construction materials are resistant (1.4305).

➔ p. 141

Liquids and gases

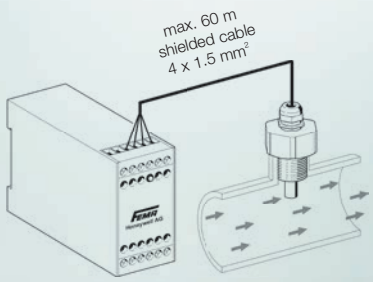

SWW

Flow monitoring

The SWF62 sensor can be used in combination with an ASW… evaluation device to monitor the flow in liquid and gaseous media. The switching point can be adjusted using coarse and fine potentiometers. This is the ideal system for monitoring water circuits and cooling circuits containing up to 35% glycol.

➔ p. 142

S6040

Series S6040

Flow monitoring in ventilation systems

Air flow monitor S6040A1003 is suitable for flow monitoring of air and non-aggressive gases in ducts of air-conditioning and air-purification systems.

Technical data

Switching capacity 15 (8) A, 24…250 VAC
2 A, 24 VDC

Service life
50000 cycles at nominal load

Working temperature -40°C…+85°C

Electrical connection
Screw terminals for 1.5 mm²

Cable diameter 6…9 mm

Protection class I according to EN60730

Protection class
IP65 according to EN60529

Housing material
ABS and corrosion-protected steel

Replacement paddle: PA1

Unit specifications

Specification	Type
	S6040A1003
Flow medium	air
Mounting	Vertically through a 20 mm hole. Paddle mounted inside.
Max. temperature of medium	85 °C
Pressure	0,25 bar
Paddle material	1.4301
Paddle lever material	Brass
Housing dimensions	108 x 70 x 72 mm
Weight	700 g
Replacement paddle	**PA1**

Mounting

The air flow monitor S6040A1003 (with paddle included) is mounted in the air duct with the switch housing at the top. The paddle is mounted from the inside of the air duct. Settling distance required: at least 5 x duct diameter before and after the switch.
To ensure a proper seal, the unit with the accompanying sealing plate must be fastened on the air duct through a 20 mm hole using the screws supplied. Once the unit is mounted on the duct, the paddle is fastened on the shaft from the inside.

Switching point adjustment

Lowest switching point: approx. 2.5 m/s; reset point: 1 m/s.
Highest switching point: approx. 9.2 m/s; reset point: 8.0 m/s.

Dimensioned drawings (mm)

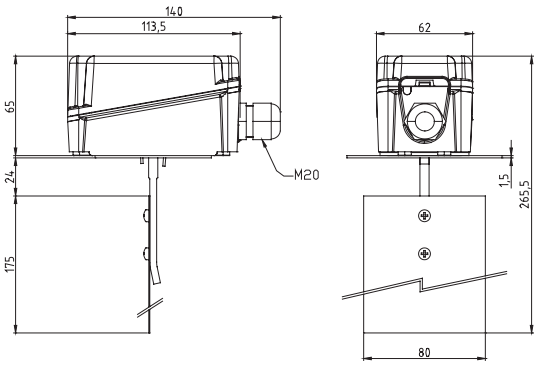

Wiring diagram:

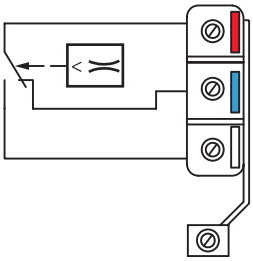

At falling flow switching from red – white to red – blue at rising flow switching from red – blue to red – white.

CE

Protection Class:
IP 65

KSL 230

KSL series

These compact flow monitors reliably measure air flow in air ducts and detect any falling below a predefined switching point. The sensitivity and hence the switching point can be set very precisely with a potentiometer. The switching state is shown by a yellow LED.

The sensor tip must be completely immersed in the medium. Signal evaluation and the switching process take place within the unit itself so that no additional space is required inside the switch cabinet.

Technical data

Medium temperature -10…+80°C

Max. ambient temperature -20…+60°C

Temperature compensation
fast, adjustment no more than 0.3 s after change in air temperature.

Sensor tube material brass 58, nickel-plated

Max. permitted pressure 10 bar

Connection PG 7, mounting flange

Power supply 230 VAC or 24 VAC/DC

Power consumption 4 VA

Contact load
Relay, single pole
250 VAC, 10 (2) A

Temperature gradient 15 K/min.

Flow rate 0.1…30 m/s

Response time 1…5 s
Temperatures > 80 °C, degree of contamination and flow velocity will reduce the response time.

Measuring element
Insensitive to moisture. Clean only under running water, without tools.

Immersion depth max. 130 mm

Sensor protection
In case of mechanical failure of the sensor element, power failure or short circuit, the relay drops out.

Reproducibility of switching point +/-1%

Weight 400 g

Mounting conditions
The sensor tip should be placed in the midst of the pipe and must be bathed completely from the medium.
Please provide a straight pipe:
5x the pipe diameter before and after the sensor device.

Setting potentiometer

+ = high sensitivity
– = low sensitivity

Signal lamps

· Main power present: Green LED ON
· Closing delay ON:
Yellow "time" LED ON
· Flow present:
Yellow "air flow" LED ON

Applications and conditions of use

The sensor is easy to install and has no mechanical moving parts liable to wear. Ideal for **ventilation and air-conditioning systems**, where the sensor can be used to monitor **fans, air intakes and butterfly valves**. Other applications include **clean rooms**, where the sensor can be used to monitor **air locks**. Ideal for the **medium, air and all non-combustible and non-aggressive gases**.

Operating method

The electronic flow monitors work according to the calorimetric principle. A thermistor is heated up. As heat is withdrawn by the flowing medium, the thermistor resistance alters. The change in resistance is evaluated. As the resistance also depends on the temperature of the medium, the difference is determined by a second thermistor and the temperature deviation is compensated. In this way the switching point remains stable. Suspended materials adhering to the sensor can have an insulating effect and so affect the measurement result and hence the defined switching point. Therefore it is advisable to remove any dirt during routine maintenance operations.

Product Summary

Type	Supply voltage
KSL230	230 V AC
KSL24	24 V AC/DC

Dimensioned drawing (mm)

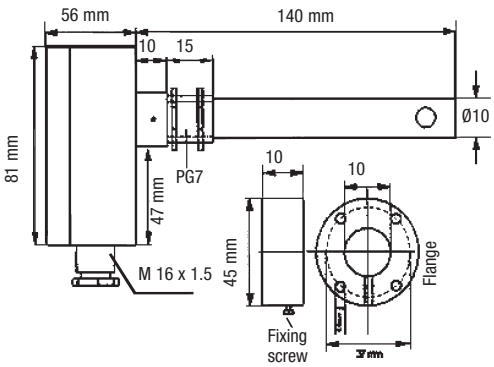

Wiring diagram

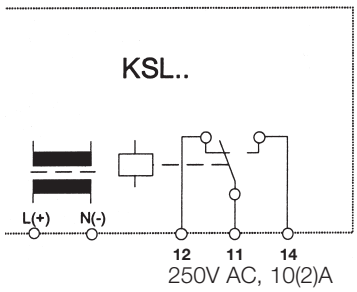

Protection Class:
IP 65

SWL

Air flow monitoring

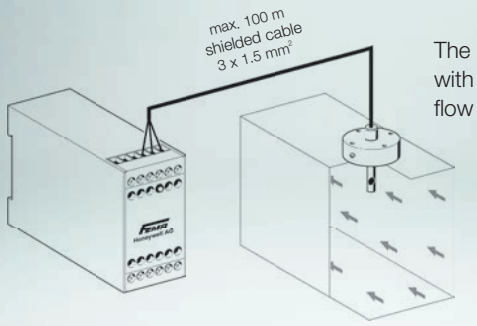

The SLF... sensor can be used in combination with an ASL… evaluation device to monitor the flow in the air (e.g. in air-conditioning systems).

The switching point is adjustable. While the fan starts up the switch-on bypass is active. The bypass duration (2 – 60 s) is adjustable.

Technical data of sensor

General
Fast-reacting air flow sensor with movable flange for installation in air ducts. With temperature compensation, suitable for media with rapid temperature changes.

Medium temperature -20…+100°C

Compensation behavior
(Reaction speed on change in medium temperature) fast, approx. 0.3 s

Installation depth 35 mm

Sensor tube diameter 10 mm

Sensor tube material nickel-plated brass

Measuring element
Insensitive to moisture (can be cleaned in water). Sensitive to mechanical deformation (care must be taken when cleaning with hard objects).

Protection class IP67

Electrical connection
Terminal strip accessible after removal of cover. 3-wire connection to evaluation unit

Mounting conditions
The sensor tip should be placed in the midst of the pipe and must be bathed completely from the medium. Please provide a straight pipe: 5x the pipe diameter before and after the sensor device.

Technical data of evaluation unit

Power supply
230 VAC or 24 VAC/DC
(see Product Summary)

Power consumption approx. 3 VA

Contact load
Relay, single pole 8 A, max. 250 VAC

Ambient temperature 0 – 60°C

Flow rate
Adjustable from 0.1 to 20 m/s for gaseous media

Response time 1…5 s
Temperatures > 80 °C, degree of contamination and flow velocity will reduce the response time.

Repetition accuracy
<2%, relative to the flow rate directly on the sensor.

Switching hysteresis approx. 2% of overall range

Max. cable length between sensor and evaluation unit
100 m, for shielded cable 1.5 mm².

Sensor protection
In case of breakage or interruption of the sensor wires, the unit switches off or an interruption of flow is signaled.

Type of construction Standard housing N 45

Weight approx. 0.35 kg

Function

The air flow monitors work according to the calorimetric principle. A thermistor is heated up. As heat is withdrawn by the flowing air, the thermistor resistance alters. The change in resistance is evaluated. As the resistance also depends on the temperature of the medium, the difference must be determined by a second thermistor. The difference is compensated and in this way the switching point is kept stable. Suspended materials adhering to the sensor can have an insulating effect and so affect the measurement result and hence the defined switching point. Therefore it is advisable to remove any dirt during routine maintenance operations.

Switch-on bypass

While the plant is being started up (still no airflow present), the output contact is activated and the flow condition signaled. The time for the switch-on bypass is adjustable from 2-60 s. The start-up or switch-on bypass starts when the unit is switched on. If an external start button (normally closed contact) is connected (to the Z-Z terminals), the start-up bypass begins when the (locking) button is pressed.

Product Summary

Type		Supply voltage
SLF3	Sensor, 35 mm	–
ASL453	Evaluation unit	230 V AC
ASL453/24	Evaluation unit	24 V AC/DC

Operator interface

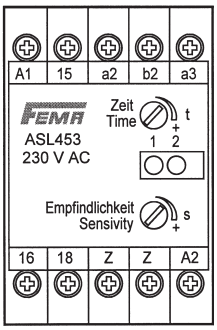

Wiring diagram

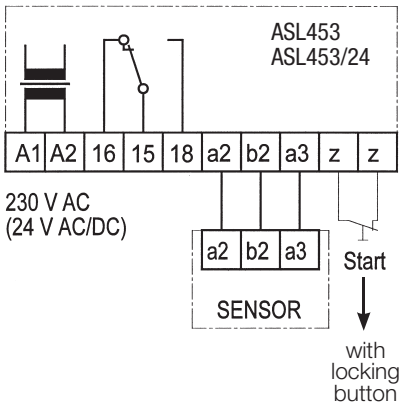

In case of malfunction, a sensor error can be ruled out by checking the resistances between the connecting wires. Sensor SLF15 must be disconnected and checked with a suitable ohmmeter between the individual connecting wires:

Black-brown approx. 8.2 kOhm
Black-grey approx. 8.2 kOhm
Brown-grey approx. 18 kOhm

The terminal voltage of evaluation units ASW454 or ASW454/24 can also be checked with a voltmeter between the "a2" and "a3" terminals after disconnecting the sensor.
31.4 VDC is the correct value.

Adjusting elements

s = sensitivity
t = time for switch-on bypass (high sensitivity at low flow)

Signal lamps

1 = Flow present or switch-on bypass active
2 = supply voltage present

Dimensioned drawings SLF, see page 138

CE

Protection Class:
IP67 (sensor)
IP20 (evaluation unit)

FEMA by Honeywell

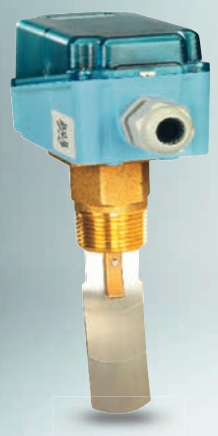

S6065

Series S6065

Flow monitoring for liquid media

The flow monitors tested (according to notice "Flow 100") of series S6065A are particularly suitable for flow monitoring of coolants in air-conditioning and refrigeration systems. Version V4A is also suitable for monitoring aggressive liquids.

Technical data

Switching capacity 15 (8) A, 24…250 VAC
2 A, 24 VDC

Service life
50000 cycles at nominal load

Electrical connection
Screw terminals for 1.5 mm²

Cable diameter 6…9 mm

Protection class I according to EN60730

Protection class IP65 according to EN60529

Housing material
ABS and corrosion-protected steel

Product characteristics

- Low-cost solution for flow monitoring in heating, ventilation and air-conditioning installations
- Fully encapsulated microswitch (single-pole changeover contact) with high current capacity
- Tested according to notice "Flow 100"

Switching point adjustment

The unit is preset to the lowest switching range. The desired switching range can be set by turning the adjusting screw in a clockwise direction (in the area of the connection terminals). Table of switching values 1 shows reset points (RP), switching points (SP) and paddle sizes for different pipe diameters.

Length of paddle

1" = 28.5 mm
2" = 54.5 mm
3" = 83.5 mm
8" = 161.5 mm

Mounting

Flow monitors for liquid media S6065A1003 and S6065A2001 can be mounted in any position, but must be positioned far enough away from pipe angles, filters and valves. The arrow on the housing must point in the flow direction. When installing in vertical pipes, take care to ensure that the flow direction is from bottom to top. Readjustment of the switching point is also necessary, as the weight of the paddle in this position affects the cut-off range. To protect the internal bellow against dirt deposits, the unit must never be installed in the pipe with the housing pointing downwards.

Replacement paddle: PA2

Unit specifications

Models	S6065A1003	S6065A2001
Flow medium	non-aggressive liquids	aggressive liquids
Mounting	Rp 1“ (ISO 7/1)	Rp 1“ (ISO 7/1)
Max. temperature of medium (Top, short time)	–40...+85 °C 120 °C	–40...+85 °C 120 °C
Pressure	11 bar	30 bar
Sensor housing material	Brass	1.4404
Paddle material	1.4401	1.4401
Paddle lever material	Brass	1.4401
Housing dimensions	113 x 70 x 65 mm	113 x 70 x 65 mm
Weight	850 g	850 g
Approvals	Flow 100	Flow 100

Replacement paddle, stainless steel **PA2**

Table of switching values 1

Pipe DN	Length of paddle	Reset and switching points (m³/h)			
		min. flow rate		max. flow rate	
		RP	SP	RP	SP
1“	1“	0,6	1,0	2,0	2,1
1 1/4“	1“	0,8	1,3	2,8	3,0
1 1/2“	1“	1,1	1,7	3,7	4,0
2“	1“ + 2“	2,2	3,1	5,7	6,1
2 1/2“	1“ + 2“	2,7	4,0	6,5	7,0
3“	1“ + 2“ + 3“	4,3	6,2	10,7	11,4
4“	1“ + 2“ + 3“	11,4	14,7	27,7	29,0
4“	1“ + 2“ + 3“ +Z*	6,1	8,0	17,3	18,4
5“	1“ + 2“ + 3“	22,9	28,4	53,3	55,6
5“	1“ + 2“ + 3“ +Z*	9,3	12,9	25,2	26,8
6“	1“ + 2“ + 3“	35,9	43,1	81,7	85,1
6“	1“ + 2“ + 3“ +Z*	12,3	16,8	30,6	32,7
8“	1“ + 2“ + 3“	72,6	85,1	165,7	172,5
8“	1“ + 2“ + 3“ +Z*	38,6	46,5	90,8	94,2

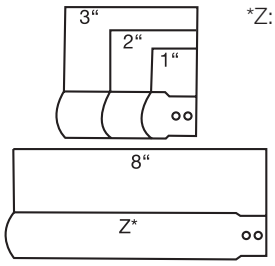

*Z: 8" paddle must be shortened according to the pipe diameter. The installed paddle must not touch the pipe walls.

Wiring diagram:

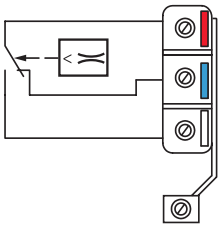

At falling flow switching from red – white to red – blue at rising flow switching from red – blue to red – white.

CE

Protection Class:
IP 65

Series S6065/SLF3/SWF62/SWF62L

Dimension in mm

S6065A1003 / S6065A2001

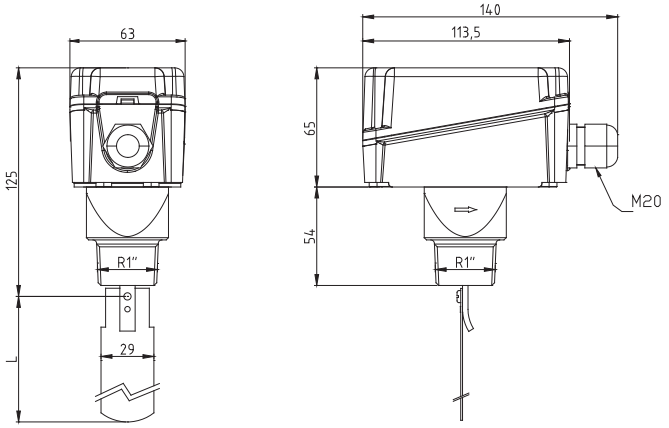

ASL453 / ASW454

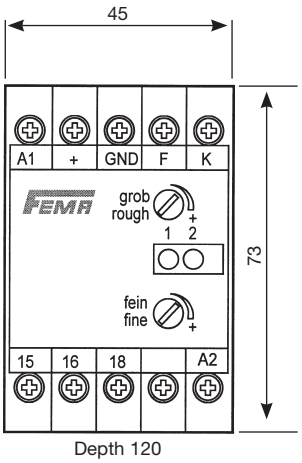

SLF3

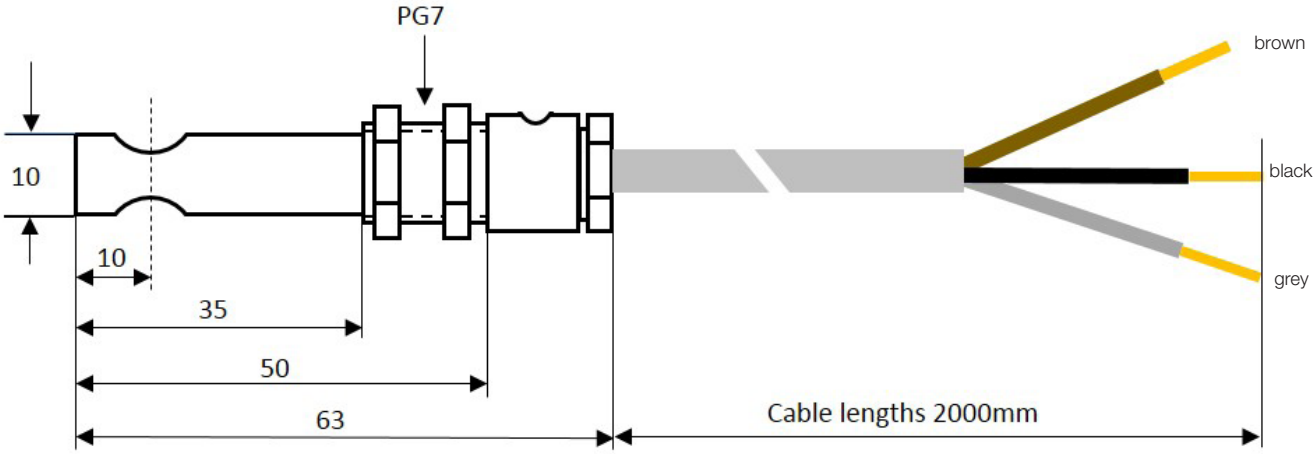

SWF62

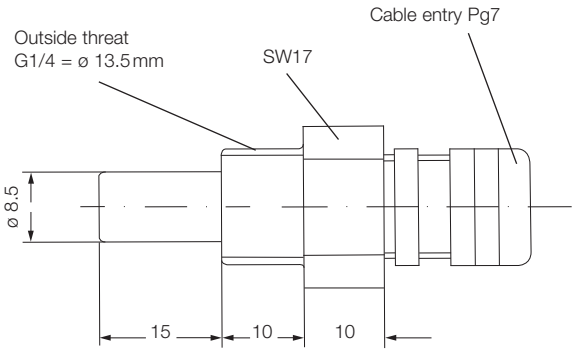

SWF62L

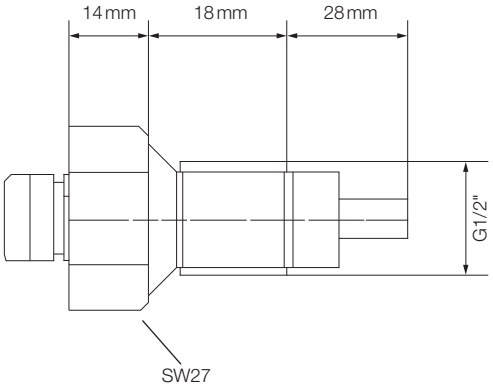

KSW230

KSW series

For monitoring flow of liquid and piped, gaseous media

These compact flow monitors reliably measure the flow of liquids and gases in pipes and detect any falling below a predefined switching point. The sensitivity and hence the switching point can be set very precisely with a rough and fine potentiometer. The switching state is shown by a yellow LED. The sensor element must be located in the flow.

Technical data

Medium temperature -10…+80°C

Max. ambient temperature -20…+60°C

Temperature compensation
0–80°C, higher temperatures (up to 120°C) may cause a deviation of the switching point but cannot damage the sensor.

Sensor material
In contact with medium: stainless steel 1.4305
Sealing compound: Wepuran (vu 4459/41 sv)

Max. pressure 30 bar

Process connection G 1/2"

Power supply 230 VAC or 24 VAC/DC

Power consumption 4 VA

Contact load
Relay, single pole
250 VAC, 10 (2) A

Max. temperature gradient 15 K/min.

Flow rate 0.05…3 m/s

Response time 5…60 s

Sensor protection
In case of mechanical failure of the sensor element or power failure or short circuit, the relay drops out.

Reproducibility of switching point
+/-1%

Weight 430 g

Mounting conditions:
The sensor tip should be placed in the midst of the pipe and must be bathed completely from the medium.
Please provide a straight pipe:
5x the pipe diameter before and after the sensor device. Malfunctions can occur when the sensor device is mounted directly after f.e.g. valves, butterfly valves or junctions.

Applications and conditions of use

The sensor is easy to install and has no mechanical moving parts liable to wear. It is especially suitable for monitoring **cooling and heating circuits containing up to 35% glycol**. **Prevents pumps from running dry.** These devices are used in the **chemical industry** for **monitoring flow of aqueous alkaline solutions and bases**. Such use is subject to compatibility with the material 1.4305.
Thanks to its robust design, the sensor is suitable for lightly contaminated media, and also aggressive media provided the material is compatible. Suspended material adhering to the sensor can have an insulating effect and so affect the measurement result and hence the defined switching point. Therefore it is advisable to remove any dirt during routine maintenance operations.

i Operating method

The electronic flow monitors work according to the calorimetric principle. A thermistor is heated up. As heat is withdrawn by the flowing medium, the thermistor resistance alters. The change in resistance is evaluated. As the resistance also depends on the temperature of the medium, the difference is determined by a second thermistor and the temperature deviation is compensated. In this way the switching point remains stable.

Type	Supply voltage
KSW230	230 V AC
KSW24	24 V AC/DC

Operator interface and dimensioned drawing of setting potentiometer

Rough and fine sensitivity
(high sensitivity for small flow).

Signal lamps

Main power present: LED green "main"
ON LED yellow "flow" ON

Dimensioned drawing (mm)

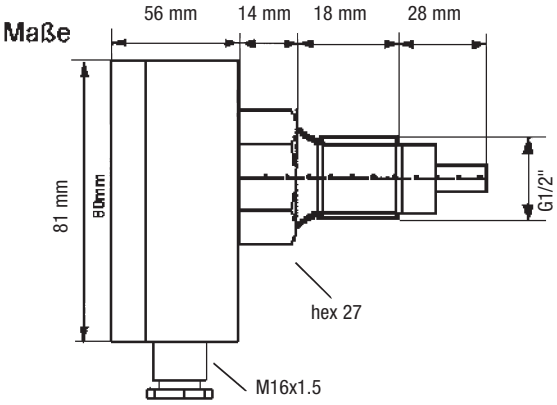

Wiring diagram

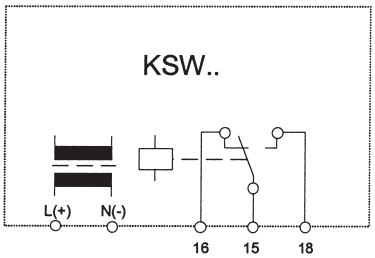

250V AC, 10(2)A

CE

Protection Class:
IP 65

FEMA by Honeywell

SWW series

For monitoring flow of liquid and piped, gaseous media

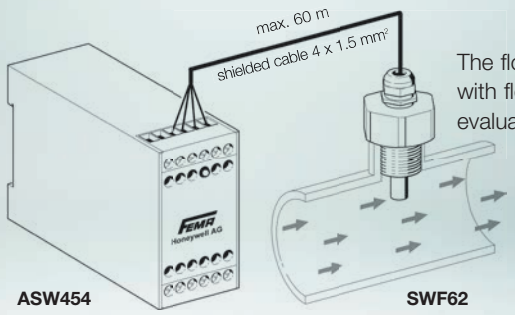

The flow in fluids can be monitored reliably with flow sensors SWF62 and SWF62L and evaluation unit ASW454.

The sensitivity can be adjusted accurately with a rough and fine potentiometer. The switching state is indicated by LED. The sensor element must be located in the flow.

Technical data of sensor

General
The flow sensor in stainless steel 1.4571 is suitable for lightly contaminated media, and also aggressive media provided the material is compatible. Flows in gaseous media can also be monitored with this sensor.

Medium temperature 0…80°C.
Higher medium temperatures (up to 120°C) may cause a deviation of the switching point but cannot damage the sensor.

Temperature compensation up to 80°C

Sensor material
In contact with medium: stainless steel 1.4571
Casting compound: Wepuran (vu 4459/41 sv)
Cable gland: Nickel-plated brass

Max. permitted pressure 20 bar

Process connection G 1/4'' or G 1/2''

Connection cable four-wire, 2.5 m long

Protection class IP67

Mounting conditions:
The sensor tip should be placed in the midst of the pipe and must be bathed completely from the medium.
Please provide a straight pipe:
5x the pipe diameter before and after the sensor device. Malfunctions can occur when the sensor device is mounted directly after f.e.g. valves, butterfly valves or junctions.

Technical data of evaluation unit

Power supply
230 VAC or 24 VAC/DC
(see Product Summary)

Power consumption approx. 3 VA

Contact load
Relay, single pole
8 A, max. 250 VAC

Ambient temperature 0 - 60°C

Max. temperature gradient 10 K/min.

Flow rate
0.1…3 m/s (liquid media) 1…15 m/s (gaseous media)

Response time approx. 5 – 60 s

Repetition accuracy
< 2%, relative to the flow rate at the sensor.

Switching differential
Approx. 2% of overall range.

Max. cable length between sensor and evaluation unit
60 m, for shielded cable 1.5 mm².

Sensor protection
In case of breakage or interruption of the sensor wires, the unit switches off or an interruption of flow is signaled.

Type of construction Standard housing N 45

Weight approx. 0.35 kg

Function

The flow monitors work according to the calorimetric principle. A thermistor is heated up. As heat is withdrawn by the flowing medium, the thermistor resistance alters. The change in resistance is evaluated. As the resistance also depends on the temperature of the medium, the difference must be determined by a second thermistor. The difference is compensated and in this way the switching point is kept stable. When monitoring high flow rates, rapid temperature fluctuations can trigger switching operations. Suspended materials adhering to the sensor can have an insulating effect and so affect the measurement result and hence the defined switching point. Therefore it is advisable to remove any dirt during routine maintenance operations.

Product Summary

Sensors	Type	Screw-in thread	Sensor length (from thread)	Thread length
	SWF62	G 1/4	**25** mm	**10** mm
	SWF62L	G 1/2	**45** mm	**18** mm

Evaluation units	Type	Supply voltage
	ASW454	230 V AC
	ASW454/24	24 V AC/DC

Operator interface

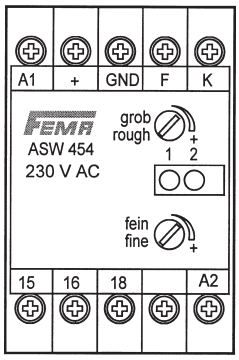

Adjusting elements
Sensitivity (rough and fine)
(high sensitivity at low flow)

Signal lamps
1 = Flow present
2 = Supply voltage present

Wiring diagram

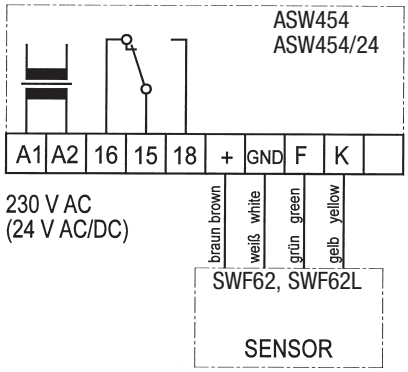

In case of malfunction, a sensor error can be ruled out by checking the resistances between the connecting wires of the sensor. Sensor SWF62 or SWF62L must be disconnected and checked with a suitable ohmmeter between the individual connecting wires:

White-brownapprox. 0.2 kOhm
White-green approx. 1.0 kOhm
White-yellowapprox. 1.0 kOhm

The terminal voltage of the evaluation units ASW454 or ASW 454/24 can also be checked with a voltmeter between the "+" and "Gnd" terminals after disconnecting the sensor.
14.8 VDC is the correct value.

Dimensioned drawings SLF, see page 138

CE

Protection Class:
IP67 (sensor)
IP20 (evaluation unit)

ACCESSORIES

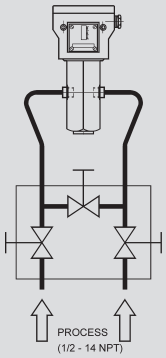

VKD3

VKD

Accessories for differential pressure switches

The valve blocks are suitable for:
Differential pressure switches DDCM014 to DDCM16,
Differential pressure switches Smart DCM DIFF
Differential pressure transmitters Smart SN DIFF

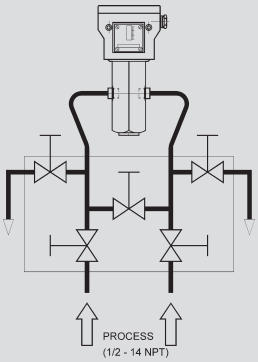

VKD5

Technical data

Pressure stage	PN 420
Materials	Housing 1.4404 Internal parts 1.4571
Seals	PTFE
Process connections	1/2"–14 NPT

Supplied complete with screw fittings and shaped pipe sections in stainless steel

Type overview

Type	
VKD3	3-fold combination
VKD5	5-fold combination

The valve blocks are for the cut-off of impulse pipes for liquid and gaseous media.
The 3-fold combination can be used for the cut-off of the impulse pipe and beside of the bypass pipe.
The 5-fold combination has two air bleed valves additionally. For use with the Smart DCM DIFF or the Smart SN DIFF the angle pipes have to be adjusted (shortened) on both sides of the sensor inputs.

Dimensioned drawings (mm)

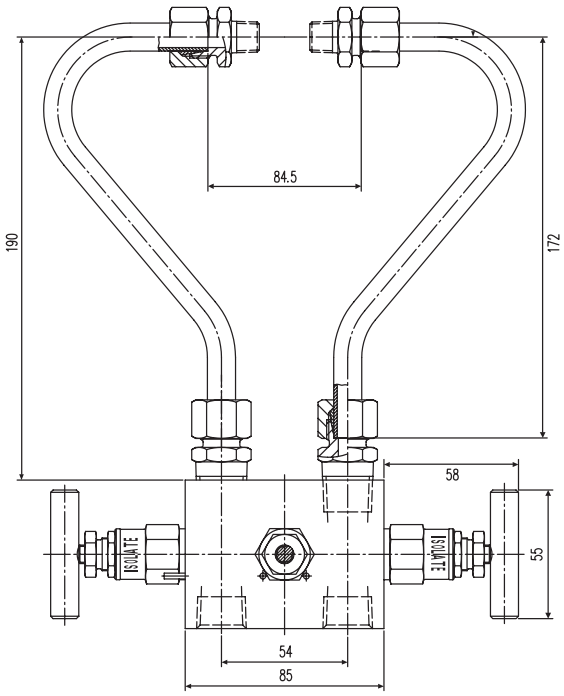

VKD3

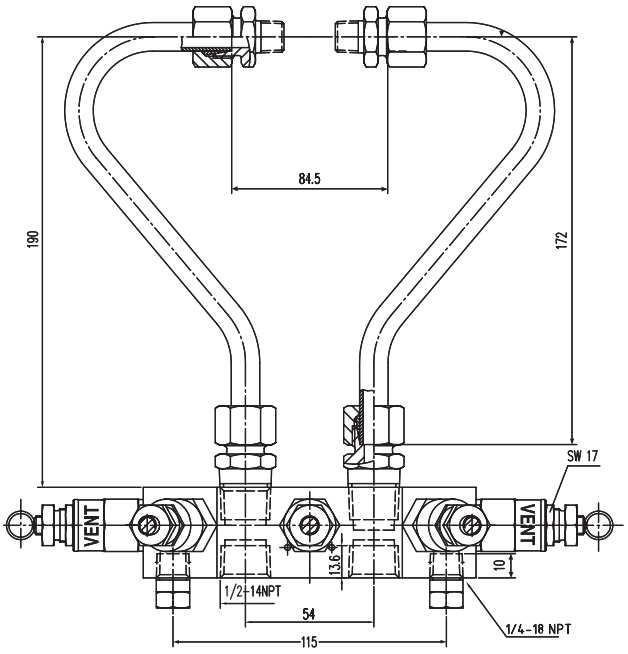

VKD5

Siphons

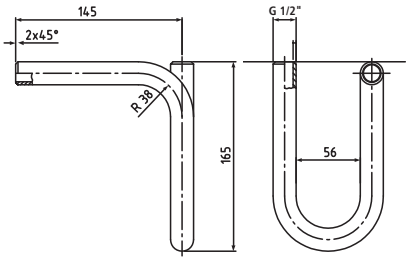

U-shape (FORM B)

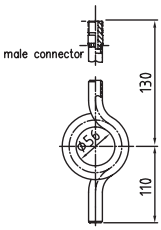

Circular (FORM D)

Siphons according to DIN 16282 made of 20 mm Ø seamless steel tube
Inlet: Weld-on end with weld chamfer
Outlet: Connection shank DIN 16282 Form 6 G 1/2" with clamping sleeve DIN 16283 G 1/2"

Type	Form	Material
U430B	B	St 35.8-I
U480B	B	1.4571
K430D	D	St 35.8-I
K480D	D	1.4571

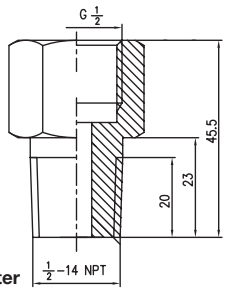

NPT adapter

NPT adapter

The purpose of the NPT adapter is to connect pressure switches, pressure transmitters, pressure gauges, etc. to NPT threaded connections. A suitable sealing washer is also supplied.

Type	Description
NPT1	NPT adapter, material 1.4104 and sealing ring DIN 16258, Form C material ITC to DIN 3754 T.1

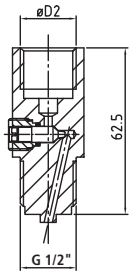

DMW

Pressure surge reducer

Type	Material
DMW	brass

MAU

Threaded joint with male adapter union

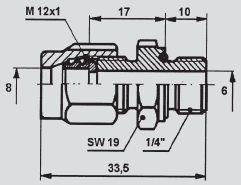

MAU8/Ms
all dimensions in mm

for differential pressure switches and transmitters
Threaded joint with male adapter union G 1/4" / 8 mm for connecting:
· DDCM differential pressure switches
· Smart DCM DIFF differential pressure switches
· Smart SN DIFF differential pressure transmitters
· Pressure switches with 1/4" internal thread

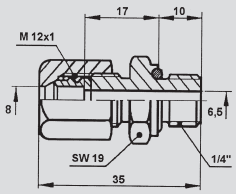

MAU8/Ms
all dimensions in mm

Technical data

Maximum permissible temperature: 100 °C
Maximum permissible pressure: 100 bar

Product Summary

Type		Body	O-Ring
MAU8/MS	G 1/4″ brass screw-in thread with O-ring seal for connection	Brass	NBR
MAU8/Nst	of pipes with 8 mm external diameter	Stainless steel (1.4571)	FPM

ZFV

Pressure mediators / diaphragm seals

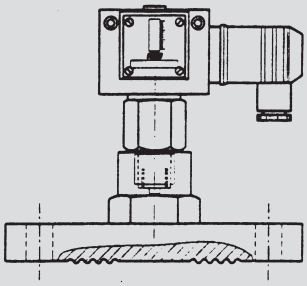

ZFV184-...

attached to pressure switches
A separating diaphragm or a pressure is necessary if aggressive, viscous or crystallizing media must be kept away from the actual pressure sensor. A pressure mediator is also indispensable to avoid cavities if easy cleaning of the supply lines is important. Special "milk pipe unions" according to DIN 11851 are customary for pressure monitoring in the foodstuffs industry. Pressure and evaluating devices (pressure switches, pressure gauges) form a self-contained unit. The transmission fluid (filling medium) transmits the medium pressure from the separating membrane to the measuring element. The filling medium M 20 is food-safe and, being able to withstand temperatures from –40 to +300 °C, is also suitable for industrial applications.

Technical data

Flange dimensions	to DIN 2527, PN 40
Material	1.4571
Specification	Fully assembled, evacuated, filled and adjusted
Filling medium	M 20 food-safe
Max. permissible pressure	40 bar (applies to separating diaphragm only, the max. permissible pressure of the pressure switch must be observed)

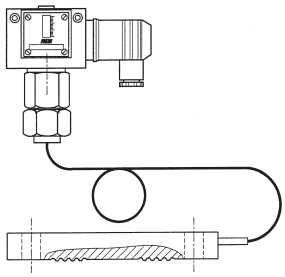

ZFV185-...

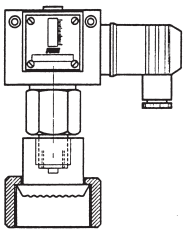

ZFV162-50

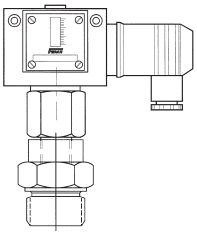

ZFV749

Delivery up to approx. 4–6 weeks, depending on the associated pressure switch.

Product Summary

Flanged pressure mediators made of stainless steel 1.4571, diaphragm flush to the front, flange to DIN 2527, PN 40

Type	DN	Pressure ranges** Pressure switch from	Temperature range* (filling medium)
ZFV184-50	50	0,3 bar	-40…120 °C
ZFV184-80	80	0,15 bar	-40…120 °C
with Teflon coating			
ZFV184-50PTFE	50	0,3 bar	-40…120 °C
ZFV184-80PTFE	80	0,15 bar	-40…120 °C

Flanged pressure mediators made of stainless steel 1.4571, with 1 m pipeline, flange to DIN 2527, PN 40

ZFV185-50	50	0,3 bar	-30…300 °C
ZFV185-80	80	0,15 bar	-30…300 °C
with Teflon coating			
ZFV185-50PTFE	50	0,3 bar	-30…300 °C
ZFV185-80PTFE	80	0,15 bar	-30…300 °C

Pipeline up to a maximum of 10 m on request.

Pressure mediators made of stainless steel 1.4571, for the foodstuffs industry with milk pipe connection according to DIN 11851

Type	DN	Pressure ranges** Pressure switch from	Temperature range* (filling medium)
ZFV162-50	50	0,4 bar	-30…120 °C
with Teflon coating			
ZFV162-50PTFE	50	0,4 bar	-30…120 °C

Varivent or Triclamp versions of the pressure mediator are available on request.

Screw-in pressure mediators made of stainless steel 1.4571
Flush connection. Use for pressure switches only, not for transmitters.

Type	DN	Pressure ranges** Pressure switch from	Temperature range* (filling medium)
ZFV749	G 1	0,5 bar	-30…120 °C
ZFV749-V191	G 1 with cooling piece	0,5 bar	-30…120 °C

*** Please note that the temperature at the pressure switch must not exceed 60 °C for long periods.**
**** Can only be used for pressure ranges ≥ the values stated in the table.**

for thermostats and pressure monitors

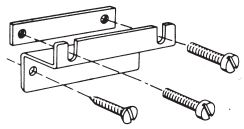

H1

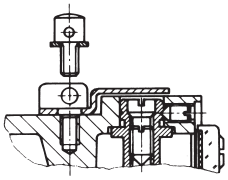

P2

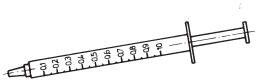

WLP1

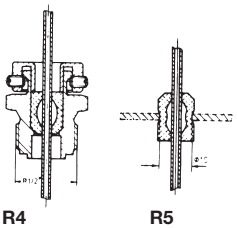

R4 R5

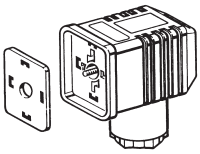

ST5

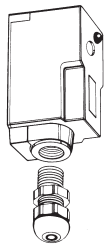

ST218

Type	
H1	**Wall bracket** including fixing screws and plugs (6 mm Ø); included as standard with TRM type thermostats. Suitable for all switching devices of the 200 and 300 series.
P2	**Sealing device** consisting of cover plate and capstan screw for covering and sealing the adjusting screws. Only suitable for switching device 200 (plug connection)
WLP1	**Heat conducting compound** to improve the transfer of heat, e.g. for strap-on thermostats. Approx. 1.5 cm^3 in handy dispenser.
R4	**Capillary tube bushing** for 3 mm capillary tube (not pressure-tight). Screw-in thread G 1/2". Suitable for all TAM..
R5	**Capillary tube bushing** Rubber plug for 3 mm capillary tube. Bore diameter 10 mm. Not pressure-tight (5 off packed in bag). Suitable for all TAM.
ST5	**Replacement plug to DIN ISO 4400** for 200 series switching devices, with seal and fastening screw, 3-pin + earth contact
ST218	**Plug connector with position indication via LEDs** Operating voltage: 12–240 V AC/DC Operating current: max. 2 A LED current consumption: max. 10 mA LED indication: green, if voltage present at contact pin 1; red, if voltage present at contact pin 2 Plug rotates through 270 °, engaging at 45 ° intervals Connection cables: 1.5 mm^2 (finely stranded) Protection class: IP 65 Ambient temperature: 0 – 60 °C Suitable for 200 series pressure and temperature switches (plug connection) which are equipped with a microswitch (standard version).

ZT

Immersion wells

for thermostats and temperature transmitters

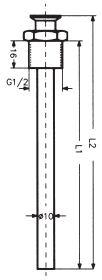

immersion wells G1/2"

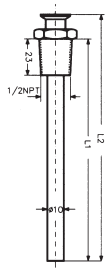

immersion wells NPT1/2"

Type	Immersion depth L_1 (mm)	Overall length L_2 (mm)	Suitable for
Nickel-plated brass, G 1/2", permitted pressure 25 bar			
R1/Ms	135	151	**TAM…**
R2/Ms	220	236	
R10/Ms	135	151	**TX…**
R20/Ms	220	236	
Stainless steel (1.4404 + 1.4401) G 1/2", permitted pressure 63 bar			
R1/Nst	135	151	**TAM…**
R2/Nst	220	236	
R10/Nst	135	151	**TX…**
R20/Nst	220	236	
Nickel-plated brass, 1/2" NPT, permitted pressure 25 bar			
RN1/Ms	135	151	**TAM…**
RN2/Ms	220	236	
RN10/Ms	135	151	**TX…**
RN20/Ms	220	236	
Stainless steel (1.4404 + 1.4401) 1/2" NPT, permitted pressure 63 bar			
RN1/Nst	135	151	**TAM…**
RN2/Nst	220	236	
RN10/Nst	135	151	**TX…**
RN20/Nst	220	236	

Immersion wells with fixing flange for air ducts

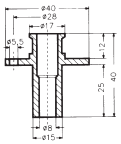

R6

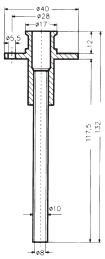

R7

Type	Immersion depth of sensor	Suitable for
Material: chromated steel		
R6	135 mm	**TX…**
R7	220 mm	

Immersion wells (screw-in thread G1/2"), stainless steel 1.4571

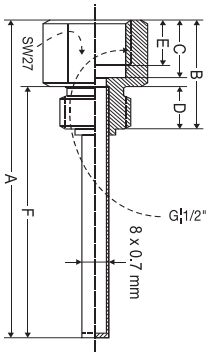

G12

Type	Immersion depth (mm)	Connection	Max. perm. press. (bar)
G12-100	100	G1/2“	40
R10/Nst	135	G1/2“	40

No more available products Product Type	Working range	Replacement Products Product Type	Working range	Comment
AB10	G3/8“	**no replacement product**		
AB13	G1/2“	**no replacement product**		
AB20	G3/4“	**no replacement product**		
AB25	G1“	**no replacement product**		
AB32	G11/4“	**no replacement product**		
AB40	G11/2“	**no replacement product**		
AB50	G2“	**no replacement product**		
ALF	-30….+110°C	**no replacement product**		
APT650	-200….+800°C	**no replacement product**		
APV630	-1999….+1999	**no replacement product**		
AT10	G3/8“	**no replacement product**		
AT13	G1/2“	**no replacement product**		
AT20	G3/4“	**no replacement product**		
AT25	G1“	**no replacement product**		
AT32	G11/4“	**no replacement product**		
AT40	G11/2“	**no replacement product**		
AT50	G2“	**no replacement product**		
AV102MS2	G3/8“	**no replacement product**		
AV103MS2	G1/2“	**no replacement product**		
AV131MS2	G1/2“	**no replacement product**		
AV201MS2	G3/4“	**no replacement product**		
AV251MS2	G1“	**no replacement product**		
AV252MS2	G11/4“	**no replacement product**		
AV401MS2	G11/2“	**no replacement product**		
AV402MS2	G2“	**no replacement product**		
AZ21		**no replacement product**		integrated in transmitter
AZ31		**no replacement product**		integrated in transmitter
AZ321		**no replacement product**		integrated in transmitter
AZ331		**no replacement product**		integrated in transmitter
DBUM06	0,1-0,6 bar	**DWR06-206**	0,1-0,6 bar	
DBUM1	0,2-1,6 bar	**DWR1-206**	0,2-1,6 bar	
DBUM18	3-18 bar	**DWR16-206**	3-16 bar	
DBUM625	0,5-6 bar	**DWR625-206**	0,5-6 bar	
DBUM8	0,5-8 bar	**DWR6-206**	0,5-6 bar	
DGM16A	3-16 bar	**DWR16**	3-16 bar	
DGM25A	4-25 bar	**DWR25**	4-25 bar	
DGM6A	0,7-6 bar	**DWR6**	0,5-6 bar	
DPS200F	20-200 Pa	**DPS200**	20-200 Pa	
DPS400F	40-400 Pa	**DPS400**	40-400 Pa	
DPS500F	20-500 Pa	**DPS500**	20-500 Pa	
DPS1000F	200-1000 Pa	**DPS1000**	200-1000 Pa	
DPS2500F	500-2500 Pa	**DPS2500**	500-2500 Pa	
DPT100	0-100 Pa/250Pa	**DPTE100**	0-100 Pa/250Pa	
DPT1000	0-1000 Pa/2500 Pa	**DPTE1000**	0-1000 Pa/2500 Pa	
DPT1000D	0-1000 Pa/2500 Pa	**DPTE1000D**	0-1000 Pa/2500 Pa	
DPT1002	0-1000 Pa/2500 Pa	**DPTE1002**	0-1000 Pa/2500 Pa	
DPT1003	0-1000 Pa/2500 Pa	**DPTE1000**	0-1000 Pa/2500 Pa	
DPT1003D	0-1000 Pa/2500 Pa	**DPTE1000D**	0-1000 Pa/2500 Pa	
DPT100D	0-100 Pa/250Pa	**DPTE100D**	0-100 Pa/250Pa	
DPT102	0-100 Pa/250Pa	**DPTE102**	0-100 Pa/250Pa	
DPT103	0-100 Pa/250Pa	**DPTE100**	0-100 Pa/250Pa	
DPT103D	0-100 Pa/250Pa	**DPTE100D**	0-100 Pa/250Pa	
DPT110	-100….+100 Pa	**DPTE100S**	-100….+100 Pa	
DPT112	-100….+100 Pa	**DPTE102S**	-100….+100 Pa	
DPT113	-100….+100 Pa	**DPTE100S**	-100….+100 Pa	
DPT250	0-250 Pa/500Pa	**DPTE250**	0-250 Pa/500Pa	
DPT250D	0-250 Pa/500Pa	**DPTE250D**	0-250 Pa/500Pa	
DPT252	0-250 Pa/500Pa	**DPTE252**	0-250 Pa/500Pa	
DPT253	0-250 Pa/500Pa	**DPTE250**	0-250 Pa/500Pa	
DPT253D	0-250 Pa/500Pa	**DPTE250D**	0-250 Pa/500Pa	
DPT50	-50….+50 Pa	**DPTE50S**	-50….+50 Pa	

No more available products		Replacement Products		Comment
Product Type	**Working range**	**Product Type**	**Working range**	
DPT500	0-500 Pa/1000Pa	**DPTE500**	0-500 Pa/1000Pa	
DPT500D	0-500 Pa/1000Pa	**DPTE500D**	0-500 Pa/1000Pa	
DPT502	0-500 Pa/1000Pa	**DPTE502**	0-500 Pa/1000Pa	
DPT503	0-500 Pa/1000Pa	**DPTE500**	0-500 Pa/1000Pa	
DPT503D	0-500 Pa/1000Pa	**DPTE500D**	0-500 Pa/1000Pa	
DPT52	-50….+50 Pa	**DPTE52S**	-50….+50 Pa	
DPT53	-50….+50 Pa	**DPTE50S**	-50….+50 Pa	
DPTM100	0-100 Pa/250Pa	**DPTE100**	0-100 Pa/250Pa	
DPTM1000	0-1000 Pa/2500 Pa	**DPTE1000**	0-1000 Pa/2500 Pa	
DPTM1000D	0-1000 Pa/2500 Pa	**DPTE1000D**	0-1000 Pa/2500 Pa	
DPTM1002	0-1000 Pa/2500 Pa	**DPTE1002**	0-1000 Pa/2500 Pa	
DPTM100D	0-100 Pa/250Pa	**DPTE100D**	0-100 Pa/250Pa	
DPTM102	0-100 Pa/250Pa	**DPTE102**	0-100 Pa/250Pa	
DPTM110	-100….+100 Pa	**DPTE100S**	-100….+100 Pa	
DPTM1100	-1000….+1000 Pa	**DPTE1000S**	-1000….+1000 Pa	
DPTM1100D	-1000….+1000 Pa	**DPTE1000SD**	-1000….+1000 Pa	
DPTM1102	-1000….+1000 Pa	**no replacement product**		
DPTM110D	-100….+100 Pa	**DPTE100SD**	-100….+100 Pa	
DPTM112	-100….+100 Pa	**DPTE102S**	-100….+100 Pa	
DPTM250	0-250 Pa/500Pa	**DPTE250**	0-250 Pa/500Pa	
DPTM250D	0-250 Pa/500Pa	**DPTE250D**	0-250 Pa/500Pa	
DPTM252	0-250 Pa/500Pa	**DPTE252**	0-250 Pa/500Pa	
DPTM50	-50….+50 Pa	**DPTE50S**	-50….+50 Pa	
DPTM500	0-500 Pa/1000Pa	**DPTE500**	0-500 Pa/1000Pa	
DPTM5000	0-5000 Pa/10000Pa	**DPTE5000**	0-5000 Pa/10000Pa	
DPTM5000D	0-5000 Pa/10000Pa	**DPTE5000D**	0-5000 Pa/10000Pa	
DPTM5002	0-5000 Pa/10000Pa	**DPTE5002**	0-5000 Pa/10000Pa	
DPTM500D	0-500 Pa/1000Pa	**DPTE500D**	0-500 Pa/1000Pa	
DPTM502	0-500 Pa/1000Pa	**DPTE502**	0-500 Pa/1000Pa	
DPTM50D	-50….+50 Pa	**DPTE50SD**	-50….+50 Pa	
DPTM52	-50….+50 Pa	**DPTE52S**	-50….+50 Pa	
DPTM550	-500….+500 Pa	**DPTE500S**	-500….+500 Pa	
DPTM550D	-500….+500 Pa	**DPTE500SD**	-500….+500 Pa	
DPTM552	-500….+500 Pa	**no replacement product**		
DNA10	1-10 bar	**DWR6/ DWR16**	0,5-6 bar/3-16 bar	
DNA16	3-16 bar	**DWR16**	3-16 bar	
DNA25	4-25 bar	**DWR25**	4-25 bar	
DNA3	0,2-2,5 bar	**DWR3**	0,2-2,5 bar	
DNA6	0,5-6 bar	**DWR6**	0,5-6 bar	
DWUM18	3-18 bar	**DWR16**	3-16 bar	
DWUM625	0,5-6 bar	**DWR625**	0,5-6 bar	
DWUM8	0,5-8 bar	**DWR6/DWR16**	0,5-6 bar/3-16 bar	
EM310		**no replacement product**		
EM320		**no replacement product**		
EMS10		**no replacement product**		
Ex-FT015		**no replacement product**		
Ex-FTB015		**no replacement product**		
EX-TX813	80…130°C	**EX-TAM813**	80…130°C	with immersion well R1/…
EX-TXB813	80…130°C	**EX-TAM813**	80…130°C	with immersion well R2/…
FA025+ED1	0-0,25 bar	**PSTM250RG12S-R**	0-0,25 bar	
		+ST12-5-A		
FA05+ED1	0-0,5 bar	**PSTM600RG12S-R**	0-0,6 bar/0-1 bar	adjustable via display 0-0.5 bar
		+ST12-5-A/ PTHRB0011V3		
FA1+ED1	0-1 bar	**PTHRB0011V3**	0-1 bar	
FA10+ED1	0-10 bar	**PTHRB0101V3**	0-10 bar	
FA25+ED1	0-25 bar	**PTHRB0251V3**	0-25 bar	
FA3+ED1	0-2,5 bar	**PTHRB0041V3**	0-4 bar	adjustable via display 0-2.5 bar
FA5+ED1	0-5 bar	**PTHRB0101V3**	0-10 bar	adjustable via display 0-5 bar
FHBN05+ED1	0-0,5 bar	**PTHDB0012V3**	0-1 bar	adjustable via display 0-0.5 bar
FHBN05+ED3	0-0,5 bar	**PTHDB0012V3**	0-1 bar	adjustable via display 0-0.5 bar
FHBN1+ED1	0-1 bar	**PTHDB0012V3**	0-1 bar	

No more available products		Replacement Products		Comment
Product Type	**Working range**	**Product Type**	**Working range**	
FHBN1+ED3	0-1 bar	**PTHDB0012V3**	0-1 bar	
FHBN10+ED1	0-10 bar	**PTHDB0202V3**	0-20 bar	adjustable via display 0-10 bar
FHBN10+ED3	0-10 bar	**PTHDB0202V3**	0-20 bar	adjustable via display 0-10 bar
FHBN3+ED1	0-2,5 bar	**PTHDB0032V3**	0-3 bar	adjustable via display 0-2.5 bar
FHBN3+ED3	0-2,5 bar	**PTHDB0032V3**	0-3 bar	adjustable via display 0-2.5 bar
FHBN5+ED1	0-5 bar	**PTHDB0062V3**	0-6 bar	adjustable via display 0-0.5 bar
FHBN5+ED3	0-5 bar	**PTHDB0062V3**	0-6 bar	adjustable via display 0-0.5 bar
FN025+ED1	0-0,25 bar	**PSTM250RG12S-R**	0-0,25 bar	
		+ST12-5-A		
FN05+ED1	0-0,5 bar	**PSTM600RG12S-R**	0-0,6 bar/0-1 bar	adjustable via display 0-0.5 bar
		+ST12-5-A/ PTHRB0011V3		
FN1+ED1	0-1 bar	**PTHRB0011V3**	0-1 bar	
FN10+ED1	0-10 bar	**PTHRB0101V3**	0-10 bar	
FN25+ED1	0-25 bar	**PTHRB0251V3**	0-25 bar	
FN3+ED1	0-2,5 bar	**PTHRB0041V3**	0-4 bar	adjustable via display 0-2.5 bar
FN40+ED1	0-40 bar	**PTHRB0401V3**	0-40 bar	
FN5+ED1	0-5 bar	**PTHRB0101V3**	0-10 bar	adjustable via display 0-0.5 bar
FN505+ED1	0-50 mbar	**no replacement product**		
FN510+ED1	0-100 mbar	**no replacement product**		
FT015	4-15°C	**FT6961-60**	-8…+8°C	
FT6960-18F		**FT6960-18**		
FT6960-30F		**FT6960-30**		
FT6960-60F		**FT6960-60**		
FT6961-18F		**FT6961-18**		
FT6961-30F		**FT6961-30**		
FT6961-60F		**FT6961-60**		
FTB015	4-15°C	**FT6961-30**	-8…+8°C	
FTS015	5-10°C, SP: 4°C	**FTSE60**		
FTSB015	5-10°C, SP: 4°C	**FTSE20 oder FTSE60**		
FVN105+ED1	-1….+5 bar	**no replacement product**		
FVN111+ED1	-1….0 bar	**PTHRV1011V3**	-1…+1 bar	adjustable via display -1...0 bar
FVN112+ED1	-1….+1 bar	**PTHRV1011V4**	-1…+1 bar	
FVN125+ED1	-0,25….+0,25 bar	**no replacement product**		
G31		**no replacement product**		
GB12	G1/2“	**no replacement product**		
GB12VA	G1/2“	**no replacement product**		
GB20	G3/4“	**no replacement product**		
GB20VA	G3/4“	**no replacement product**		
GB25	G1"	**no replacement product**		
GB25VA	G1"	**no replacement product**		
GK13	G1/2“	**no replacement product**		
GK20	G3/4“	**no replacement product**		
GK25	G1"	**no replacement product**		
GK25F	DN25	**no replacement product**		
GK32	G11/2"	**no replacement product**		
GK32F	DN32	**no replacement product**		
GK40	G11/2“	**no replacement product**		
GK40F	DN40	**no replacement product**		
GK50	G2"	**no replacement product**		
GK50F	DN50	**no replacement product**		
GS		**no replacement product**		
GT4		**no replacement product**		
K…(Solenoid Valves)		**no replacement product**		
KF	-30…+150°C	**no replacement product**		
L….(Solenoid Valves)		**no replacement product**		
LMS31		**no replacement product**		
LMT30	0…+30°C	**no replacement product**		
MCP1		**no replacement product**		
PD		**no replacement product**		
PI30-..		**no replacement product**		
PTE006BGG23B	0 ... 6 bar	**PTI6**		

No more available products		Replacement Products		Comment
Product Type	**Working range**	**Product Type**	**Working range**	
PTE010BGG23B	0 ... 10 bar	**PTI10**		
PTE016BGG23B	0 ... 16 bar	**PTI16**		
PTE025BGG23B	0 ... 25 bar	**PTI25**		
PTE040BGG23B	0 ... 40 bar	**PTI40**		
PZ….(Temp.-Transmitter)		**no replacement product**		
RA31		**no replacement product**		
SB…(pressure transmitter)		**no replacement product**		
SD…(pressure transmitter)		**no replacement product**		
SK10	0-200Pa/500Pa/1000Pa	**DPTE250 or DPTE500**	0-250Pa//500 Pa/1000Pa	
SK10-AK	0-200Pa/500Pa/1000Pa	**DPTE250D or DPTE500D**	0-250Pa//500 Pa/1000Pa	
SK20	0-400Pa/1000Pa/2000Pa	**DPTE500 or DPTE1000**	0-500 Pa/1000Pa/2500Pa	
SK20-AK	0-400Pa/1000Pa/2000Pa	**DPTE500D or DPTE1000D**	0-500 Pa/1000Pa/2500Pa	
SK5	0-200Pa/500Pa/1000Pa	**DPTE250 or DPTE500**	0-250Pa//500 Pa/1000Pa	
SK5-AK	0-200Pa/500Pa/1000Pa	**DPTE250D or DPTE500D**	0-250Pa//500 Pa/1000Pa	
SKV10	-1000….+1000 Pa	**DPTE1000S**	-1000….+1000 Pa	
SKV10-AK	-1000….+1000 Pa	**DPTE1000SD**	-1000….+1000 Pa	
SKV5	-500….+500 Pa	**DPTE500S**	-500….+500 Pa	
SKV5-AK	-500….+500 Pa	**DPTE500SD**	-500….+500 Pa	
SL10-2	0-1000 Pa	**DPTE1002**	0-1000 Pa/2500 Pa	
SL10-3	0-1000 Pa	**DPTE1000**	0-1000 Pa/2500 Pa	
SL20-2	0-2000 Pa	**DPTE1002**	0-1000 Pa/2500 Pa	
SL20-3	0-2000 Pa	**DPTE1000**	0-1000 Pa/2500 Pa	
SL50-2	0-5000 Pa	**DPTE5002**	0-5000 Pa/10000Pa	
SL50-3	0-5000 Pa	**DPTE5000**	0-5000 Pa/10000Pa	
SL5-2	0-500 Pa	**DPTE502**	0-500 Pa/1000Pa	
SL5-3	0-500 Pa	**DPTE500**	0-500 Pa/1000Pa	
SN025-280	0-0,25 bar	**no replacement product**		
SN025-311	0-0,25 bar	**PSTM250RG12S-R +ST12-5-A**	0-0,25 bar	
SN025-395	0-0,25 bar	**PSTM250RG12S-R +ST12-5-A**	0-0,25 bar	
SN06-280	0-0,6 bar	**PTHRB0011A2**	0-1 bar	adjustable via display 0-0,6 bar
SN06-311	0-0,6 bar	**PTHRB0011V3**	0-1 bar	adjustable via display 0-0,6 bar
SN06-395	0-0,6 bar	**PTHRB0011V3**	0-1 bar	adjustable via display 0-0,6 bar
SN10-280	0-10 bar	**PTHRB0101A2**	0-10 bar	
SN10-311	0-10 bar	**PTHRB0101V3**	0-10 bar	
SN10-395	0-10 bar	**PTHRB0101V3**	0-10 bar	
SN1-280	0-1 bar	**PTHRB0011A2**	0-1 bar	
SN1-311	0-1 bar	**PTHRB0011V3**	0-1 bar	
SN1-395	0-1 bar	**PTHRB0011V3**	0-1 bar	
SN16-280	0-16 bar	**PTHRB0161A2**	0-16 bar	
SN2-280	0-1,6 bar	**PTHRB0041A2**	0-4 bar	adjustable via display 0-2 bar
SN25-280	0-25 bar	**PTHRB0251A2**	0-25 bar	
SN25-311	0-25 bar	**PTHRB0251V3**	0-25 bar	
SN25-395	0-25 bar	**PTHRB0251V3**	0-25 bar	
SN3-280	0-2,5 bar	**PTHRB0041A2**	0-4 bar	adjustable via display0-2,5 bar
SN3-311	0-2,5 bar	**PTHRB0041V3**	0-4 bar	adjustable via display0-2,5 bar
SN3-395	0-2,5 bar	**PTHRB0041V3**	0-4 bar	adjustable via display0-2,5 bar
SN4-280	0-4 bar	**PTHRB0041A2**	0-4 bar	
SN40-280	0-40 bar	**PTHRB0401A2**	0-40 bar	
SN40-311	0-40 bar	**PTHRB0401V3**	0-40 bar	
SN40-395	0-40 bar	**PTHRB0401V3**	0-40 bar	
SN6-280	0-6 bar	**PTHRB0101A2**	0-10 bar	adjustable via display 0-6 bar
SN6-311	0-6 bar	**PTHRB0101V3**	0-10 bar	adjustable via display 0-6 bar
SN6-395	0-6 bar	**PTHRB0101V3**	0-10 bar	adjustable via display 0-6 bar
SR…(pressure transmitter)		**no replacement product**		
ST221		**no replacement product**		
STW1F	20…150°C	**STW1**	20…150°C	
STW2080F	20…80°C	**STW2080**	20…80°C	
STW70130F	70…130°C	**STW70130**	70…130°C	
STW+TRF	20…150°C	**STW+TR**	20…150°C	

No more available products		Replacement Products		Comment
Product Type	**Working range**	**Product Type**	**Working range**	
STB1F	60…130°C	**STB**	60…130°C	
STB2080F	20…80°C	**STB2080**	20…80°C	
STB70130F	70…130°C	**STB70130**	70…130°C	
STB+TWF	30…110°C	**STB+TW**	30…110°C	
STB+TRF	30…110°C	**STB+TR**	30…110°C	
STG12-100F		**STG12-100**		
T… (solenoid valve)		**no replacement product**		
T4NSTF		**T4NST**		
T5NSTF		**T5NST**		
T6950A1000	-10…+12°C	**FT6960-18**	-8…+8°C	
T6950A1018	-10…+12°C	**FT6960-30**	-8…+8°C	
T6950A1026	-10…+12°C	**FT6960-60**	-8…+8°C	
T6951A1009	-10…+12°C	**FT6961-18**	-8…+8°C	
T6951A1017	-10…+12°C	**FT6961-30**	-8…+8°C	
T6951A1025	-10…+12°C	**FT6961-60**	-8…+8°C	
T6960A1008	-10…+12°C	**FT6960-18**	-8…+8°C	
T6960A1016	-10…+12°C	**FT6960-30**	-8…+8°C	
T6960A1024	-10…+12°C	**FT6960-60**	-8…+8°C	
T6961A1007	-10…+12°C	**FT6961-18**	-8…+8°C	
T6961A1015	-10…+12°C	**FT6961-30**	-8…+8°C	
T6961A1023	-10…+12°C	**FT6961-60**	-8…+8°C	
TF	-10…+150°C	**no replacement product**		
TLM…		**TX… + R6**		
TLMB…		**TXB… + R7**		
TNM…		**TX… + R10/Nst**		
TNMB…		**TXB… + R20/Nst**		
TP21-55	-50…+50°C	**no replacement product**		
TP21-150	-50…+150°C	**no replacement product**		
TP3-55	-50…+50°C	**no replacement product**		
TP3-100	0…+ 100°C	**no replacement product**		
TP3-150	-50…+150°C	**no replacement product**		
TSP…		**no replacement product**		
TSS…		**no replacement product**		
TX813	80…130°C	**TAM813**	80…130°C	with immersion well R1/…
TXB813	80…130°C	**TAM813**	80…130°C	with immersion well R2/…
TXM…		**TX… + R10/Ms**		
TXMB…		**TXB… + R20/Ms**		
UDI…		**no replacement product**		

TERMS AND CONDITIONS
Except as agreed to on the face hereof, the following terms and conditions apply without exception to all sales described on the face hereof by the member of the Honeywell International Inc. group of companies identified on the face of this document ("Honeywell") to Buyer.

1. SOLE TERMS.

Honeywell's sale is expressly limited to the terms herein and any additional or different terms or conditions on Buyer's purchase order or any other instrument, agreement, or understanding are deemed to be material alterations and are rejected and not binding upon Honeywell. Honeywell's acceptance of Buyer's purchase order is expressly conditional upon Buyer's assent to the terms and conditions contained herein in their entirety. Buyer's acceptance of delivery from Honeywell constitutes Buyer's acceptance of these terms and conditions in their entirety.

2. QUOTE/ PRICES.

Honeywell's quotation, if constituting the reverse side of this document, is firm only if Buyer enters an order within the time specified on the quote or, if none be mentioned, 30 days. Buyer must request shipment of the entire quantity of goods ordered within 12 months from date of order, otherwise, Honeywell standard prices at time of shipment may, at Honeywell's option, apply to those quantities actually delivered, even if already invoiced. All tooling, designs, drawings, and other intellectual property produced or delivered hereunder are owned by Honeywell. If, after conclusion of contract Honeywell's costs of materials have increased by 5% or more and this increase could not have been foreseen by Honeywell, then Honeywell may increase the price on all affected goods accordingly.

3. PAYMENT.

Unless otherwise stated on the face hereof, all payments are to be in EUR and are due in Honeywell's account within 30 days from date of invoice. Invoices remaining unpaid after their due date will be subject to an interest charge of 5% per year. Invoices remaining unpaid 30 days after their due date and receipt of invoice will be subject to an interest charge of 8%-points above the respective base rate published by the German Federal Bank per year, unless buyer is not responsible for the default Buyer will pay all costs necessary for collection of unpaid amounts, including attorneys' fees, unless Buyer is not responsible for the default.

4. DELIVERY; EXAMINATION; RETENTION OF TITLE.

(a) All delivery dates are estimates unless agreed otherwise by Honeywell in writing.
(b) Delivery terms for goods are EXWORKS (Incoterms 2000) Honeywell's facility with all risk of loss or damage to goods passing to Buyer upon delivery to carrier.
(c) Buyer must to inspect all goods upon delivery without undue delay and has to report open defects, transport damages, failures in identity and shortages without undue delay, in no event later than 5 days after delivery, hidden defects without undue delay, in no event later than 5 days after detection in writing to Honeywell, otherwise all goods will be deemed delivered and accepted., unless Honeywell has maliciously concealed the defect.
In the event Buyer is in default of acceptance Buyer shall be liable for increased costs incurred by Honeywell.
(d) Honeywell shall retain title in all goods delivered by Honeywell until payment has been made in full. In the event of a current account, retention of title shall serve as security for any balance due to Honeywell.
(e) The Buyer shall treat the goods with care; in particular it shall insure it sufficiently against fire, water and theft at reinstatement value at its own cost.
(f) In the event of seizure or any other measure taken by third parties in relation to the goods, the Buyer shall notify Honeywell in writing without undue delay so that Honeywell can initiate legal proceedings pursuant to § 771 of the German Code of Civil Procedure in order to prevent execution of any court order. If the third party is unable to reimburse the costs incurred in court and out of court of a claim pursuant to § 771 of the German Code of Civil Procedure, the Buyer is liable for the damages incurred hereby.
(g) Any processing of or alteration to the goods carried out by the Buyer shall always be carried out for Honeywell. If the goods are processed using other items, which do not belong to Honeywell, Honeywell shall acquire co-ownership of the new item in the ratio of the value of the object delivered to the other processed items at the time of processing.
(h) If the goods are irreversibly mixed using other items, which do not belong to Honeywell, Honeywell shall acquire co-ownership of the new item in the ratio of the value of the object delivered to the other mixed items at the time of mixing. If the mixing process takes place in such a way that the Buyer's item must be regarded as the principal item the parties shall be deemed to have agreed that the Buyer shall transfer shared title to Honeywell pro rata.
(i) Should the Buyer sell the goods delivered – whether processed or not – in due course of business, it hereby assigns any claims from selling the goods with all ancillary rights vis-à-vis its customer to Honeywell.
(j) On good cause the Buyer is obliged, if requested by Honeywell, to inform Honeywell of any assignment to a third-party purchaser and to give Honeywell all information required for the assertion of its rights and to hand over any documents.
(k) Should the realisable value of Honeywell's security exceed the debt claim to be secured by more than 10 % Honeywell shall release means of security – at its discretion – at the request of the Buyer.

5. TAXES.

The amount of any and all applicable taxes will be added to the price and paid by Buyer, unless Buyer has provided Honeywell with exemption certificates acceptable to the taxing authorities.

6. FORCE MAJEURE. DELIVERY DELAY.

Honeywell is not liable for any delay in production or delivery of goods if due to a force majeure event, which includes, among other things, shortages or inability to obtain materials or components, or refusals to grant an export license or the suspension or revocation thereof, or any other acts of any government that would limit Honeywell's ability to perform, fire, earthquake, flood, severe weather conditions, or any other acts of God, quarantines, epidemics, pandemics, or other regional medical crisis labour strikes or lockouts, riots, strife, insurrection, civil disobedience, armed conflict, terrorism or war (or imminent threat of same), or any other cause whatsoever beyond Honeywell's reasonable control.
If the force majeure event continues for longer than 90 days, either party may terminate Buyer's purchase order. If Buyer terminates the order Buyer will pay Honeywell for work performed prior to termination and all reasonable expenses incurred by Honeywell prior to termination. In the event of delays in delivery or performance caused by force majeure or Buyer, the date of delivery or performance shall be extended by the period of time Honeywell is actually delayed or as mutually agreed.
If, for reasons other than the foregoing, Honeywell should default or delay or not deliver goods, Buyer may cancel Buyer's purchase order, through prior written notice to Honeywell. In as far as Buyer incurred damages due to the delivery delay culpably caused by Honeywell Honeywell's liability is limited to 0.5% of the order value of the delayed delivery per week in any event to 5% of the order value of the delayed delivery. Buyer is only entitled to claim damages in lieu of performance in accordance with section 11.

7. TERMINATION.

No Buyer purchase order may be terminated without Honeywell's prior written consent. Goods scheduled for shipment within 30 days cannot be rescheduled. Goods scheduled for shipment between 30 and 60 days may be rescheduled with Honeywell's prior written consent and if, rescheduled beyond 60 days that quantity may not be further rescheduled. Buyer is, nonetheless liable for termination charges, which may include (a) a price adjustment based on the quantity of goods delivered, (b) all costs, direct and indirect, incurred and committed for Buyer's terminated purchase order, (c) the full cost of all unique materials required for custom goods, and (d) a reasonable allowance for prorated expenses and anticipated profits consistent with industry standards. Honeywell may terminate a Buyer's purchase order in whole or in part upon Buyer's breach of these terms and conditions or Buyer's bankruptcy, insolvency, dissolution, or receivership proceedings.

8. INFRINGEMENT INDEMNIFICATION.

(a) Honeywell agrees to (i) defend or settle any claim, suit, or proceeding brought against Buyer based solely upon a claim that any goods manufactured and provided solely by Honeywell hereunder directly infringe any third party German patent, copyright, or maskwork, and (ii) to pay costs and damages finally awarded to the third party, provided that: (A) Honeywell is notified promptly in writing of such claim, (B) Honeywell is provided sole control of such defence or settlement using counsel of Honeywell's choice, and (C) Buyer provides Honeywell with all available information and assistance. Because Honeywell has exclusive control over resolving infringement claims hereunder, in no event will Honeywell be liable for Buyer's attorneys' fees, if any.
(b) Honeywell shall not be responsible for any settlement or compromise of any such third party claim made without Honeywell's written consent. Honeywell has no obligation and this Section 8 will not apply to any claim of infringement of any intellectual property right of a third party (i) by goods not in Honeywell's catalogue or goods developed pursuant to Buyer's direction, design, process, or specification, (ii) by the combination of any goods with other elements if such infringement could have been avoided but for such combination, (iii) by goods that have been modified if such infringement would have been avoided by the unmodified goods, (iv) by goods not used for their ordinary purpose, or (v) by software if such software is other than the latest version of the software released by Honeywell and provided to Buyer. Buyer agrees to defend, indemnify, and hold harmless Honeywell from and against any claims, suits, or proceedings whatsoever arising from such exclusions identified in this Section 8(b), unless this is not caused by Buyer's failure.
(c) At any time after a claim has been made or Honeywell believes is likely to be made, or a court of competent jurisdiction enters an injunction from which no appeal can be taken, Honeywell has at its option the discretion to (i) procure for Buyer the right to continue using such goods, (ii) replace or modify such goods in a way that it does not further infringe any third party intellectual property rights and without affecting the functionality of said goods. In the event Honeywell fails to do so within a reasonable time limit to be set by Buyer, Honeywell shall accept the return of such goods and refund the purchase price less 20% annual depreciation from shipment date. The foregoing states Buyer's exclusive remedy for any actual or alleged infringement of intellectual property rights. Buyer is only entitled to claim damages subject to section 11.

9. SOFTWARE.

Software, if listed on the face hereof or installed on a good listed on the face hereof, is governed by the following terms unless a software license agreement is included with such software. Subject to Buyer's compliance with these terms and conditions, Honeywell grants a personal, limited, nonexclusive license to use the object code of the software solely for Buyer's internal purposes. The license is limited to such kind of goods as are specified on Buyer's purchase order for which this instrument serves as either a quotation or acknowledgment. No other use is permitted. Honeywell retains for itself (or, if applicable, its suppliers) all title and ownership to any software delivered hereunder, all of which contains confidential and proprietary information and which ownership includes, without limitation, all rights in patents, copyrights, trademarks, and trade secrets. Buyer shall not attempt any transfer without prior written consent of Honeywell, sublicense, or redistribution of the software except as expressly permitted herein. Buyer is only entitled to copy the software in as far as necessary for the contractual purpose. Buyer is entitled to make back-up copies in as far as necessary. Furthermore Buyer shall not disclose, distribute, or display any such software, or otherwise make it available to others (except as Honeywell authorizes in writing) or allow any unauthorized use of the software. Buyer is only entitled to reverse compile the software within the scope of § 69e UrhG. Buyer is only entitled modify, upgrade or alter the software in any other way within the scope of § 69c UrhG. Honeywell may terminate this license if Buyer breaches fundamental provisions under these terms and conditions.

10. WARRANTY.

(a) The following is in lieu of all other warranties and conditions, express or implied including those of satisfactory quality and fitness for particular purpose.
(b) Except as otherwise expressly provided herein, Honeywell warrants goods of its manufacture in all material respects to be free of defective materials and faulty workmanship and as conforming to applicable specifications and/or drawings. Honeywell may, without notice to Buyer, incorporate changes to goods that do not alter form, fit, or function and are reasonably acceptably to Buyer. Commencing with delivery Honeywell's warranty shall run for the period specified on the face hereof or, if none be mentioned, 12 months.
(c) Non-complying goods returned to Honeywell will be repaired or replaced, at Honeywell's option, and return-shipped lowest cost, transportation prepaid. The costs of transportation to Honeywell have to be borne by Buyer. In the event Honeywell fails to repair or replace the non-complying good within a reasonable time limit set by Buyer, Honeywell shall accept the return of such goods and refund the purchase price less 20% annual depreciation from shipment date. The foregoing states Buyer's exclusive remedy in case of defects. Buyer is only entitled to claim damages subject to section 11.
(d) No goods will be accepted for return without an authorization number obtained in advance of shipment to Honeywell.

(e) Goods subject to wear and tear or burnout through usage shall not be deemed defective because of such wear and tear or burnout. No warranty shall apply if the defect or damage was caused by or related to installation, combination with other parts and/or products, modification to or repair of any goods other than by Honeywell, or resulted from Buyer's acts, omissions, misuse, or negligence.
(f) Repaired or replaced goods shall be warranted for the remainder of the unused warranty term or for 90 days from shipment, whichever is longer.
(g) Experimental goods (which may be designated by the letter "X" or "E" beginning their part number identification) or unreleased or beta software are prototype, pre- production items that have yet to complete all phases of release testing; these goods are sold "AS IS" WITH NO WARRANTY.
(h) It is Buyer's responsibility to ensure that the Goods are fit for the application in which they are used.
(i) Software, if listed on the face hereof and/or used within goods listed on the face hereof and warranted by Honeywell, will be furnished on a medium that's free of defect in materials or workmanship under normal use for so long as the hardware and/or system is under warranty. During this period, Buyer has the rights listed in section 10 C with regard to any defects of the software.
(j) Where hardware and/or a system is installed by Honeywell, such installation is warranted against faulty workmanship for the same period (if any) as applies to the installed items. During this concurrently running period, Honeywell will correct without charge any workmanship it finds to be faulty.
(k) These warranties are for the benefit of the Buyer only and are not assignable or transferable.

11. LIMITATION OF LIABILITY.

(a) Honeywell is liable for intent and gross negligence on its part, on the part of its legal representatives and vicarious agents. If Honeywell has not acted intentionally Honeywell's liability is restricted to typical, foreseeable damage.
(b) Honeywell shall also be liable in the event of negligent injury to life, body and health caused by Honeywell, its legal representatives or vicarious agents and in the event of wilful failure to disclose a defect. Where a guarantee is provided by Honeywell, then the extent of Honeywell's liability is to be determined pursuant to the guarantee declaration.
(c) Honeywell shall also be liable for the negligent infringement of such duties, the fulfilment of which warranted the execution of the agreement in the first place and the observance of which the Buyer is and can be sure of on Honeywell's part, the part of its legal representatives or vicarious agents. If Honeywell has not acted intentionally Honeywell's liability is restricted to typical, foreseeable damage.
(d) Additionally Honeywell shall be liable in cases of mandatory statutory liability, for example pursuant to the Product Liability Act.
(e) Other than stated herein any liability of Honeywell is excluded, regardless of the theory of liability, whether based in contract, tort, indemnity or otherwise.
(f) The Buyer shall notify and consult with Honeywell without undue delay and comprehensively if it intends to take legal recourse in accordance with the afore-mentioned provision. The Buyer has to allow Honeywell to investigate and examine the damages.

12. RECOMMENDATIONS.

Any recommendations or assistance provided by Honeywell concerning the use, design, application, or operation of the goods shall not be construed as representations or warranties of any kind, express or implied, and such information is accepted by Buyer at Buyer's own risk and without any obligation or liability to Honeywell. It is the Buyer's sole responsibility to determine the suitability of the goods for use in the Buyer's application(s). The failure by Honeywell to make recommendations or provide assistance shall not give rise to any liability to Honeywell.

13. LAWS.

a)Buyer will comply with all applicable laws, regulations, and ordinances of any governmental authority in any country having proper jurisdiction, including, without limitation, those laws of the United States or other countries that regulate the import or export of the goods provided by Honeywell and shall obtain all necessary import/export licenses in connection with any subsequent import, export, re-export, transfer, and use of all goods, technology, and software purchased, licensed, and received from Honeywell. Unless otherwise mutually agreed in writing, Buyer agrees that it will not use the goods in connection with any activity involving nuclear fission or fusion, any use or handling of any nuclear material, or any nuclear, chemical, or biological weapons.
b) Goods and services delivered by Honeywell hereunder will be produced and supplied in compliance with all applicable laws and regulations in the Federal Republic of Germany. Buyer confirms that it will ensure that all goods are properly installed and used in accordance with the applicable safety at work laws and regulations, and Buyer will indemnify Honeywell in respect of any costs, claims, actions or liability arising out of that Act, or otherwise arising out of the supply by Buyer or use by others of the goods, unless this is not caused by Buyer's failure.

14. PRECLUSION AGAINST SETOFF.

Buyer is only entitled to set off any amount against any amount due or to become due from Honeywell to Buyer or its affiliates that are undisputed or final absolute.

15. WEEE

a) Prices do not include the costs of recycling goods covered by the European WEEE Directive 2002/96/EC and such costs may be added to the prices quoted.
b) Unless a charge has been made therefore under section 15 a above, if the provisions of the WEEE Directive 2002/96/EC as implemented in any local jurisdiction apply to goods, the financing and organisation of the disposal of the waste electrical and electronic equipment are the responsibility of the Buyer who herewith accepts this responsibility, and Buyer will indemnify Honeywell in respect of all such liabilities. The Buyer will handle the collection, processing and recycling of the goods in accordance with all applicable laws and regulations, and shall pass on this obligation to the final user of the goods. Failure by the Buyer to comply with these obligations may lead to the application of criminal sanctions in accordance with local laws and regulations

16. APPLICABLE LAW.

These Terms and Conditions are subject to the Laws of the Federal Republic of Germany. These terms and conditions are excluded from the United Nations Convention on Contracts for the International Sale of Goods, 1980, and any successor thereto. The competent court at the seat of Honeywell will have exclusive jurisdiction to adjudicate any dispute related to these terms and conditions.

17. INDEMNIFICATION.

Buyer shall indemnify Honeywell for all costs and damages, including attorneys' fees, suffered by Honeywell as a result of Buyer's culpable actual or threatened breach of these terms and conditions.

18. MISCELLANEOUS.

The parties may exchange confidential information during the performance or fulfilment of any purchase order. All confidential information shall remain the property of the disclosing party and shall be kept confidential by the receiving party for a period of 10 years following the date of disclosure. These obligations shall not apply to information which is: (a) publicly known at the time of disclosure or becomes publicly known through no fault of recipient, (b) known to recipient at the time of disclosure through no wrongful act of recipient, (c) received by recipient from a third party without restrictions similar to those in this section, or (d) independently developed by recipient. Each party shall retain ownership of its confidential information, including without limitation all rights in patents, copyrights, trademarks and trade secrets. A recipient of confidential information may not disclose such confidential information without the prior written consent of the disclosing party, provided that Honeywell may disclose confidential information to its affiliated companies, employees, officers, consultants, agents, and contractors These terms and conditions (including those stated on the face hereof) constitute the entire agreement of Honeywell and Buyer, superseding all prior agreements or understandings, written or oral, and cannot be amended except by a mutually executed writing. Buyer may not assign any rights or duties hereunder without Honeywell's written prior consent. Honeywell may subcontract its obligations hereunder without Buyer's consent. No representation, warranty, course of dealing, or trade usage not contained or expressly set forth herein will be binding on Honeywell. Headings and captions are for convenience of reference only and do not alter the meaning or interpretation of these terms and conditions. No failure by Honeywell to enforce at any time for any period the provisions hereof shall be construed as a waiver of such provision or of the right of Honeywell to enforce thereafter each and every provision. In the event any provision herein is determined to be illegal, invalid, or unenforceable, the validity and enforceability of the remaining provisions shall not be affected and, in lieu of such provision, a provision as similar in terms as may be legal, valid, and enforceable shall be added hereto. Provisions herein which by their very nature are intended to survive termination, cancellation, or completion of Buyer's order after acceptance by Honeywell shall survive such termination, cancellation, or completion. All stenographic and clerical errors are subject to correction. These terms and conditions shall confer no benefit on any third party.

19. LANGUAGE

The English language version of these terms and conditions will prevail in case of conflict with any translations provided for convenience purposes.

ALL PRODUCTS DATA ONLINE

- technical data
- mounting instructions
- tender text
- product pictures
- product selector
- certificates

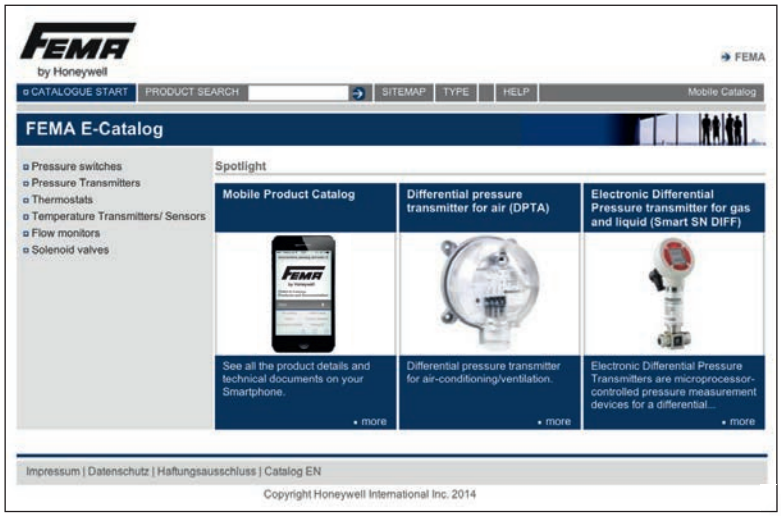

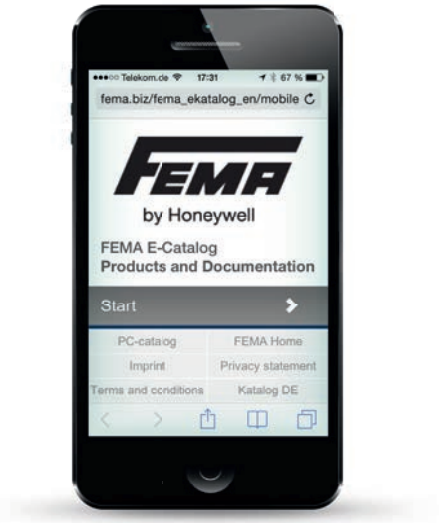

fema.biz

fema.biz/fema_ekatalog_en/mobile

Honeywell GmbH
FEMA-Controls
Böblinger Str. 17
71101 Schönaich
Germany
Telephone +49 (0) 7031/6 37-02
Telefax +49 (0) 7031/6 37-8 50
info@fema.biz

Pressure · Temperature · Flow Control

www.honeywell.com
www.fema.biz

EN0B-0684GE51 R1218
Subject to change.

© 2018 Honeywell GmbH.

FEMA
by Honeywell