Honeywell
THE POWER OF **CONNECTED**

ООО Промэлектроника
sales@prom-elec.com

MICRO SWITCH Heavy-Duty Limit Switch

HDLS Series

002345

Issue 10

Datasheet

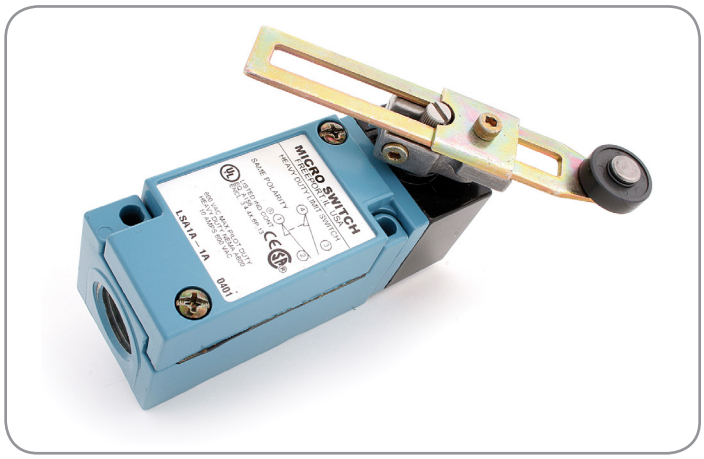

DESCRIPTION

Honeywell's MICRO SWITCH heavy-duty limit switches' modular construction allows for a wide variety of actuator styles, operating heads, and electrical circuitry options. The plug-in versions greatly reduce downtime on production lines with high actuation rates as replacement of the switch is accomplished in seconds. The base receptacle contains all the wiring and conduit connection while the switching component with operating head easily assembles to the base and is attached with two screws.

They are ideal for many applications with demanding indoor and/or outdoor environments, where they may be subjected to shock or vibration from equipment, temperature extremes, dust, splashing water, coolant, and/or hose-directed water.

DIFFERENTIATION

- Sintered bronze bearing on 303 stainless steel operating shaft for enhanced mechanical life (up to 50 million actuation cycles) and operational reliability
- All-metal drive train for consistent operating characteristics, even at high temperature. Lasts longer (without need for frequent adjustment) than drive trains with plastic parts
- Exclusive teller tab ensures proper torque. When it cannot be moved, the lever is tight enough to prevent slippage

VALUE TO CUSTOMERS

- NEMA 1, 3, 4, 4X, 6, 6P, 12, 13 and IP65/66/67 environmental sealing for demanding applications
- Industry-leading breadth-of-product offering: HDLS standard, HDLS harsh-duty epoxy sealed, or the HDLS stainless steel
- UL, CSA, CE, and CCC approvals for global use
- Configurable product platform for design versatility
- Large, existing installation base and channel allows for quick delivery worldwide

FEATURES

- NEMA 1, 3, 4, 4X, 6, 6P, 12, 13 and IP65/66/67 environmental sealing
- NEMA/IP sealing features twin shaft seals for an extra measure of protection
- Rugged, corrosion-resistant zinc head and body are phosphate treated and epoxy coated
- Diaphragm seal between head and body provides an extra measure of protection
- Multiple connectivity options for international applications
- Fluorosilicone seals available for low temperature applications, and fluorocarbon seals available for chemically harsh environments and higher temperature applications
- Secure head-to-body retention with the head in any one of four positions 90° apart
- Self-lifting pressure plate terminals saves wiring time
- Wide variety of actuators, switch options, and head styles
- Rotary actuated heads are field adjustable for CW actuation, CCW actuation, or both
- Silver or gold-plated contacts
- Plug-in and non plug-in bodies have identical operating characteristics and are dimensionally interchangeable

POTENTIAL APPLICATIONS

- Machine tools
- Automotive machine tools
- Material handling
- Outdoor electromechanical structures
- Balers/compactors
- Conveyors
- Food and beverage
- Power plants
- Off-road equipment
- Agricultural equipment
- Valves
- Transportation hubs

PORTFOLIO

The heavy-duty HDLS Series limit switch is part of Honeywell's comprehensive and broad limit switch portfolio that includes global, medium-duty, compact, hazardous area, and specialty limit switches. To view the entire product portfolio, click here.

ПРОМЭЛЕКТРОНИКА / sales@prom-elec.com

Figure 1. MICRO SWITCH HDLS Series Features and Options

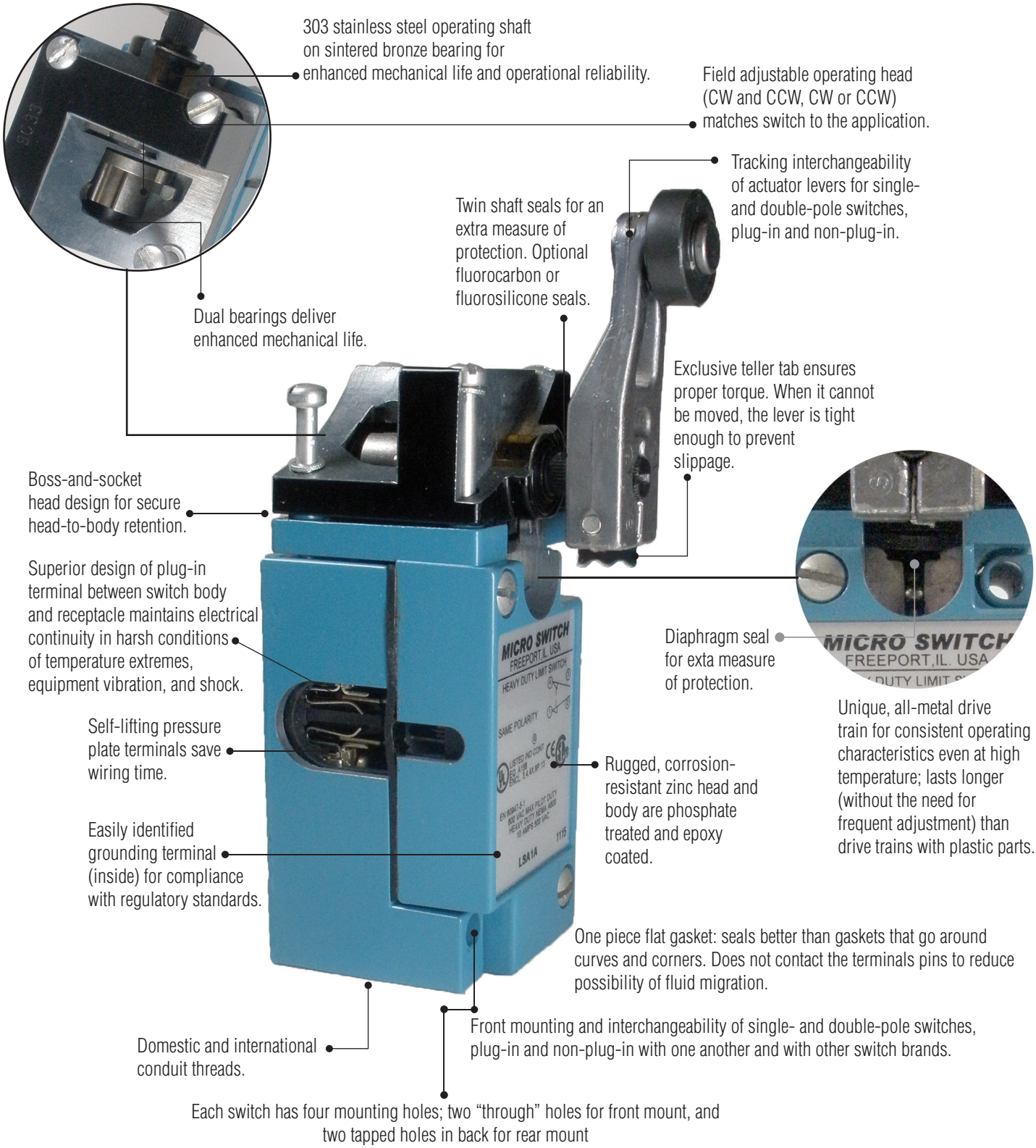

MICRO SWITCH Heavy-Duty Limit Switch, HDLS Series

Table 1. Specifications

Characteristic	Parameter		
Product type	MICRO SWITCH heavy-duty limit switches		
Certifications	UL, CE, CSA, CCC		
Reference standards	UL508, CSA 22.2 #14, EN/IEC60947-5-1, GB 14048.5		
Housing material	Electrostatic epoxy coated zinc		
Housing type	HDLS Plug-in, HDLS Non-Plug-in		
Acutators/heads	Side plunger - adjustable Side roller plunger Top plunger - adjustable Top rotary Wobble - coil spring	Side plunger - pin Side rotary Top plunger - pin Wobble - cable Wobble - plastic rod	Side plunger maintained - pin Side rotary maintained Top roller plunger Wobble - cat whisker Wobble - spring wire
Circuitry	1NC 1NO SPDT snap action, double break 2NC 2NO DPDT center neutral, snap action, double break 2NC 2NO DPDT snap action, double break 2NC 2NO DPDT sequential, snap action, double break		
Termination types	0.5 in - 14NPT conduit PG 13,5 conduit 4-pin mini-style connector Manifold mounting	0.75 in - 14NPT conduit 20 mm conduit 5-pin mini-style connector	12 ft cable, 6 ft cable 4-pin micro-style connector 9-pin mini-style connector
Contact type	Snap action double break (form Za) same polarity each pole		
Contact material	Silver alloy (standard), optional gold-plated (low energy applications)		
Utilization category	AC-15, A600; DC-13, R300 (electrical ratings on page 5)		
Rated operational voltage (Ue)	600 Vac, 250 Vdc		
Rated operational current (Ie)	1.2 A, 0.1 A		
Rated thermal current	10 A, 2.5 A		
Rated insulation voltage	600 V		
Rated impulse withstand voltage (Uimp)	2500 V		
Short circuit protection device (SCPD) type and rating	Class J fuse, rated 10 A, 600 V		
Pollution degree	3		
Sealing	IP65/66/67; NEMA 1, 3, 4, 4X, 6, 6P, 12, 13		
Operating temperature[1]	-12°C to 121°C [10°F to 250°F]; optional: -40°C to 121°C [-40°F to 250 'F]		
Vibration	10 g conforming to IEC 60068-2-6		
Shock (actuator not fitted)	50 g conforming to IEC 60068-2-27		
UNSPSC code	302119		
UNSPSC commodity	302119 Switches and controls and relays		

[1] *Reference page 8 for additional temperature detail.*

Figure 2. Product Nomenclature • Standard

LS A 1A 1 -

Switch Type

HDLS Series Heavy-Duty Limit Switch

Optional Conduit

3	PG 13,5
4	20 mm

Seal Options

Y	Insert Y for seal option B or C

Heads

A	Side rotary, CW and CCW, momentary
B	Top rotary, momentary
C	Top pin plunger, momentary
D	Top roller plunger, momentary
E	Side pin plunger, momentary
F	Side roller plunger, momentary
H	Side rot., CW/CCW momentary, low pretravel & torque
J	Wobble stick
K	Cat whisker
L	Sequential, side rotary, CW & CCW, momentary
M	Center neutral, side rotary, CW & CCW, momentary
N	Side rotary, maint., CW (reset), CCW (trip)
P	Side rotary, CW & CCW, momentary, low diff. travel
R	Side rotary, CW & CCW, momentary, low torque
S	Side rotary, CW & CCW, gravity return
T	Side rotary, CW & CCW, momentary, extr. low torque
U	Side rotary, CW & CCW, momentary, 5° pretravel
V	Adustable top pin plunger, momentary
W	Adustable side pin plunger, momentary

Contact Block and Housing Style (with integral conduit)

1NC/1NO Plug-in Housing

1A	Standard cont., 0.5-14 NPT
1E	Gold contacts, 0.5-14 NPT
1F	Standard cont., manifold mount
1H	Standard cont., low force, S or T, 0.5-14 NPT
5A	Standard cont., 120 V neon, 0.5-14 NPT
8A	Standard cont., 240 V neon indicator
9A	Standard cont., 24 V LED indicator

1NC/1NO Non-Plug-in Housing

3K	Standard cont., 0.5-14 NPT

2NC/2NO Plug-in Housing

2B	Standard cont., 0.75-14 NPT
2C	Sequential, standard cont., 0.75-14 NPT
2D	Center neutral, standard cont., 0.75-14 NPT
2F	Standard cont., manifold mount
2R	Standard cont., 120 V neon, 0.75-14 NPT
2S	Gold contacts, 0.75-14 NPT
2T	Sequential, gold contacts, 0.75-14 NPT
2U	Center neutral, gold contacts, 0.75-14 NPT
6B	Standard cont., 0.5-14 NPT
6C	Sequential, standard cont., 0.5-14 NPT
6D	Center neutral, standard cont., 0.5-14 NPT
6R	Standard cont., 120 V neon, 0.5-14 NPT
6S	Gold contacts, 0.5-14 NPT
6T	Sequential, gold contacts, 0.5-14 NPT
6U	Center neutral, gold contacts, 0.5-14 NPT

2NC/2NO Non-Plug-in Housing

4L	Standard cont., 0.75-14 NPT
4M	Sequential, standard cont., 0.75-14 NPT
4N	Center neutral, standard cont., 0.75-14 NPT
4S	Gold contacts, 0.75-14 NPT
4T	Sequential, gold contacts, 0.75-14 NPT
4U	Center neutral, gold contacts, 0.75-14 NPT
7L	Standard cont., 0.5-14 NPT
7M	Sequential, standard cont., 0.5-14 NPT
7N	Center neutral, standard cont., 0.5-14 NPT
7S	Gold contacts, 0.5-14 NPT
7T	Sequential, gold contacts, 0.5-14 NPT
7U	Center neutral, gold contacts, 0.5-14 NPT

Seal Options

B	Low temp. (fluorosilicone)
C	Improved chem. resistance (flurorcarbon)

Modification Codes

A	4-pin mini-style
B	5-pin mini-style
C	5-conductor STOW-A cable, 6 ft
E	4-conductor SJTOW-A cable, 6 ft
J	8-pin mini-style
M	9-conductor STOOW-A cable, 6 ft
P	5-conductor STOOW-A cable, 12 ft
R	9-pin mini-style
S	5-pin micro-style
X	9-conductor STOOW-A cable, 12 ft
BB	3-foot mini-style pigtail, single pole
DD	4-pin micro-style with jumper
PA	5-conductor STOOW-A cable, 8 ft
XA	9-conductor STOOW-A cable, 8 ft
PB	5-conductor STOOW-A cable, 30 ft
1	Clockwise head rotation
2	Counterclockwise head rotation
3	Head assembled with actuator to right side
4	Head assembled with actuator to left side
5	Head assembled with actuator to mounting surface
6	Roller perpendicular to mounting surface
7	Indicator light wired to normally closed circuit
8	Roller on side plunger in vertical position

Wobble Actuator

J-style Wobbles

7A	Plastic rod, 140 mm [5.5 in]
7M	Spring wire (302 SST) 330 mm [13 in]
7N	Coil spring (302 SST) 140 mm [5.5 in]

K-style Wobbles

8A	Cat whisker, spring (302 SST) 140 mm [5.5 in]
8B	Coil spring (302 SST) 190 mm [7.5 in]
8C	Coil spring (302 SST) 140 mm [5.5 in]

NOTE: Not all combinations of model codes are available. Please contact your local Honeywell provider for assistance.

MICRO SWITCH Heavy-Duty Limit Switch, HDLS Series

ASSEMBLY MODIFICATIONS • ROTARY

Momentary action rotary switches can be furnished in other than the normal assembled conditions. To specify modifications, add the numbers shown below to the catalog listings. Modification number suffixes are:

1 Clockwise actuation only
2 Counterclockwise actuation only
3 Shaft to right of switch front
4 Shaft to left of switch front
5 Shaft to back of switch
7 Indicator light wired to NC circuit

For example,
Catalog listing LSA1A**23** is an LSA1A switch adjusted for counterclockwise actuation only. The operating shaft is to the right side of the switch when viewing it from the front (label side). No lever.

Catalog listing LSA8A**7** is an LSA8A switch with the 240 volt indicator light wired to the NC circuit. No lever.

PLUNGER ASSEMBLY MODIFICATIONS

Add the following modification numbers to the catalog listing in the plunger switch:

3 Side plunger to right of switch front
4 Side plunger to left of switch front
5 Side plunger to back of switch
6 Roller on top plungers perpendicular to mounting surface
7 Light on indicator versions wired to NC circuit
8 Roller on side plungers in vertical position

For example,
Catalog listing LSF1A**3** is an LSF1A switch with the side roller plunger to the right side.

PLUG-IN VS. NON-PLUG-IN MODELS

Honeywell HDLS limit switches are offered in two styles: non-plug-in design and plug-in design. With plug-in construction, the wiring and conduit connection is made to the base receptacle. This feature reduces downtime as the plug-in unit can be removed and replaced without disconnecting the wiring or conduit connections to the switch.

HDLS Series Electrical Ratings: 10 A Continuous Carry ac Volts; Pilot Duty: AC-15, A600/B600

Electrical Rating	Circuitry	Vac	Amps at 0.35 Power Factor Make	Amps at 0.35 Power Factor Break
A* AC-15, A600	SPDT DPDT	120	60	6
		240	30	3
		480	15	1.5
		600	12	1.2
B AC-15, B600	Δ	120	30	3
		240	15	1.5
		480	7.5	0.75
		600	6	0.60

Δ Gravity return (Model LSS..) and extra-low torque (Model LST..)

HDLS Series Electrical Ratings: dc Volts; Pilot Duty: DC-13, R300

Electrical Rating	Circuitry	Vdc	Make & Break Amps Inductive	Make & Break Amps Resistive
A, B*	SPDT DPDT	125	0.25	0.8
		250	0.15	0.4

* For switches with an indicator light, use only at voltage stated for indicator light.

MICRO SWITCH HDLS limit switches are capable of the following low voltage dc loads

Circuitry	Vdc	Amps Inductive	Amps Resistive
SPDT	24	10	10
DPDT	24	10	10

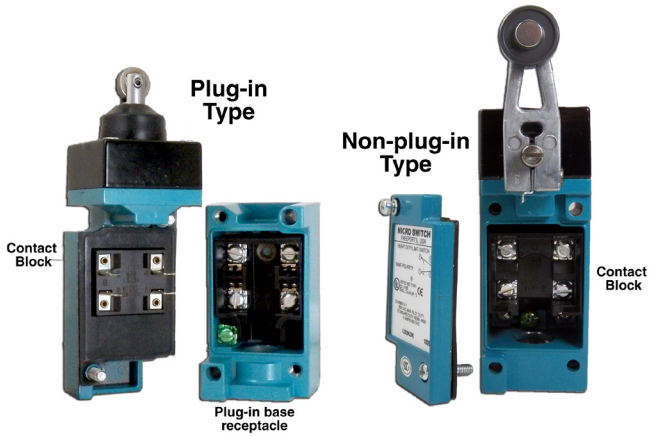

MICRO SWITCH HDLS SERIES ACTUATOR HEADS

SIDE ROTARY: Available levers provide greater versatility. Heads may be positioned with shaft on any side. All are momentary action except maintained head (LSN Series).

LSA - Standard: 15° maximum pretravel, 5° (single pole) and 7° (double pole) maximum differential travel, 60° minimum overtravel. Operating temperature range from -12°C to 121°C [10°F to 250°F].*

LSR - Low operating torque: 0.19 Nm [1.7 in lb] maximum operating torque. 60° minimum overtravel, 15° maximum pretravel. Operating temperature range from -1°C to 121°C [250°F to 250°F].*

LSN - Maintained contact: Maintained on counterclockwise rotation and reset on clockwise rotation, and vice versa. Operating temperature range from -1°C to 121°C [30°F to 250°F].

LSP - Low differential: 3° (single pole) and 4° (double pole) maximum differential travel. 68° minimum overtravel, 7° maximum pretravel. Operating temperature range from -12°C to 121°C [10°F to 250°F].*

LSH - Low torque, low differential travel: Features low operating torque and narrow differential travel. 68° minimum overtravel. Operating temperature range from -1°C to 121°C [30°F to 250°F].*

LSU - Low pretravel: 5° max. pretravel, 70° min. overtravel. Operating temperature range from -12°C to 121°C [10°F to 250°F].*

LSL - Sequence action: Delayed action between operation of two poles. 48° minimum overtravel. Operating temperature range from -12°C to 121°C [10°F to 250°F].*

LSM - Center neutral: One set of contacts operates on the clockwise rotation, and another set on the counterclockwise rotation. 53° minimum overtravel. Operating temperature range from -1°C to 121°C [30°F to 250°F].*

LST - Momentary action with extra low torque: 12 in oz of operating torque with momentary action. Operating temperature range from -12°C to 121°C [10°F to 250°F].*

LSS - Gravity return: Has no return spring mechanism in actuator head so weight of the lever must provide the return force. Extremely light operating torque (5 in oz max.) is useful in conveyor applications and can be operated by small or lightweight objects. Operating temperature range from -1°C to 121°C [30°F to 250°F].*

TOP ROTARY: Available levers provide greater versatility. Momentary action.

LSB: With 100° minimum overtravel. Various levers that fit side rotary shafts may be used on the top rotary shaft. Switch is ideal when increased overtravel is required. Momentary action. Standard operating temperature range from -1°C to 121°C [30°F to 250°F].*

TOP PLUNGERS: Available with 4,83 mm [0.19 in] minimum overtravel. Top pin plungers are offered in pin plunger, an adjustable plunger, and a roller plunger. Standard temperature range of -12°C to 93°C [10°F to 200°F].

LSC - Top pin plunger: A corrosion-resistant steel plunger for in-line actuating motion. A boot seal on the plunger and a seal between the actuator head and housing keep out coolant, dust, and chips. Momentary action.

LSD - Top roller plunger: A corrosion-resistant steel roller and plunger that is adjustable to 90° angles to accept cam or slide operation from any of two directions. Boot seal on the plunger and a seal between the actuator head and housing. Momentary action

LSV - Adjustable top pin plunger: Provides easy application and saves on installation time. The operating points of the switch can be adjusted from 52,8 mm to 59,3 mm [2.085 in to 2.335 in]. Seals are the same as the pin plunger. Momentary action.

**(Fluorocarbon seals are preferred for temperatures above 93°C [200°F]).*

MICRO SWITCH HDLS SERIES ACTUATOR HEADS

SIDE PLUNGERS: Available with 4,83 mm [0.19 in] minimum overtravel. Side plungers are offered in plain plunger, an adjustable plain plunger, a roller plunger, and a maintained plunger. Standard temperature range of -12°C to 93°C [10°F to 200°F].

	LSE - Side pin plunger: For actuating motion inline with the plunger travel. Actuating head may be faced in any of four positions, 90° apart. A boot seal on the plunger and a seal between the head and housing keep out coolant, dust, and chips. Momentary action.
	LSF - Side roller plunger: Fits close quarters under cams and slides. The head may be faced in any of four positions, 90° apart. The roller can be turned vertical or horizontal to the switch. Seals are same as side pin plunger. Momentary action.

	LSW - Adjustable side pin plunger: Has the same features of the side plain plunger plus the means to adjust the operating points of the switch from 41 mm to 47,4 mm [1.615 in to 1.865 in]. Seals are same as side pin plunger. Momentary action.
	LSG - Maintained contact side pin plunger: Offers a maintained contact on actuation of the switch. A reverse motion of the plunger resets the switch. Sealing is the same as other side plunger actuation heads. Operating temperature range is -1°C to 93°C [30°F to 200°F].

WOBBLE LEVER ACTUATING HEADS: Heads come with either a spring wire, Delrin® plastic rod, or steel cat whisker. Any movement of the lever (except pull) will actuate the switch. Standard temperature range of -12°C to 93°C [10°F to 200°F].

LSJ1A-7M - Spring wire: 300 Series SST wire may be formed for special applications.	**LSJ1A-7N - Flexible actuator:** Designed with a tin-plated cable.	**LSK1A-8C - Coil spring:** Designed with a 300 Series SST coil spring.	**LSJ1A-7A - Plastic rod:** Recommended where possible scratching or marring by the actuator is to be avoided.	**LSK1A-8A - Cat whisker:** 300 Series SST actuator designed for low operating force applications.

SPECIAL OPTIONS

High temperature/Chemical-resistant Switches

Completely fluorocarbon (FC)-sealed switches have a full FC body gasket coving the switch cavity. Rotary types have an extra FC seal on the operating shaft, while plunger versions have FC boot seals. They are for use in many applications where the environment includes fire-resistant synthetic fluids. In addition to most all fluids, the FC-sealed switches may be used with such industrial fluids such as Cellulube, Fyrquell, Houghto-Safe, Pydraul, and other special cutting and hydraulic fluids. The additional FC seals also promote longer operating life for rotary-actuated HDLS switches in applications where the temperatures are normally -12°C to 121°C [10°F to 250°F]. If pre-wired with cable, then temperature limits are 105°C [221°F] dry and 60°C [140°F] wet.

To order, insert the additional letters **Y** and **C** in the appropriate places in the standard catalog listing, as shown below:

LSA1A	standard, side-rotary plug-in switch
LSYAC1A	completely FC-sealed version of LSA1A

Low Temperature Switches

All forms of HDLS limit switches are also available in low-temperature construction. Design features include fluorosilicone diaphragm, shaft seals, and external booth seal (where applicable). If pre-wired with a cable, low temperature limits are -10°C [14°F] flex and -30°C [-22°F] non-flex.

To order, insert the additional letters **Y** and **B** in the appropriate places in the standard catalog listing, as shown below:

LSA1A	standard, side-rotary plug-in switch
LSYAB1A	low-temperature version of LSA1A

Conduit Openings

For conduit openings other than 1/2-NPT and 3/4-NPT, substitute the following after LS in the catalog listing:

LS3 PG13,5

LS4 20 mm

LSA1A	side rotary with 1/2-14 NPT conduit
LS4A1A	side rotary with 20 mm conduit

Table 2. Temperature Limits

	Standard HDLS				Low Temperature HDLS (Fluorosilicone Sealed): Y_B				High Temperature HDLS (Fluorocarbon Sealed)*: Y_C		
	Low Limit		High Limit		Low Limit		High Limit		Low Limit		High Limit
	-12°C [10°F]	-1°C [30°F]	93°C [200°F]	121°C [250°F]	-40°C [-40°F]	-29°C [-20°F]	93°C [200°F]	121°C [250°F]	-12°C [10°F]	-1°C [30°F]	121°C [250°F]
LSA - Side Rotary Momentary	X			X	X			X	X		X
LSB - Top Rotary		X		X		X		X		X	X
LSC - Top Plain Plunger	X		X		X		X		X		X
LSD - Top Roller Plunger	X		X		X		X		X		X
LSE - Side Plain Plunger	X		X		X		X		X		X
LSF - Side Roller Plunger	X		X		X		X		X		X
LSG - Side Plunger, Maintained		X	X			X	X			X	X
LSH - Side Rotary, Low PT, Low Torque		X		X		X		X		X	X
LSJ - Wobble Stick	X		X		X			X	X		X
LSK - Cat Whisker	X		X			X		X	X		X
LSL - Side Rotary, Sequence	X			X	X			X	X		X
LSM - Side Rotary, Center Neutral		X		X	X			X		X	X
LSN - Side Rotary, Maintained		X		X		X		X		X	X
LSP - Side Rotary, Low Pretravel	X			X	X			X	X		X
LSR - Side Rotary, Low Torque		X		X		X		X		X	X
LSU - 5° Low Pretravel	X			X	X			X	X		X
LSV - Top Adjustable Plunger	X		X		X		X		X		X
LSW - Side Adjustable Plunger	X		X		X		X		X		X

* For HDLS application wherein the upper temperature limit is normally above 93°C [200°F], much longer switch life can be obtained by using completely fluorocarbon-sealed switches rather than standard HDLS.

Factory-sealed Pre-wired Limit Switches

Features

- Pre-wired with 6 ft STOOW-A cable or other 4, 5, or 9-pin connectors (other lengths available)
- Wire entry area completely factory sealed
- (Cable version) NEMA 1, 6, 6P, 12; IP67
- (Connector version) NEMA 1, 6, 6P, 12, 13; IP67

How to order:

To order factory sealed switches, add the modification codes shown below to the standard HDLS listings (reference product nomenclature on page 4):

Circuitry	Cable	1/2 in connector style
SPDT	**C**	**A** (4-pin mini-style) **B** (5-pin mini-style) **DD** (4-pin micro-style)
DPDT	**M**	**R** (9-pin mini-style)

Examples:
LSA1A**C** = LSA1A with 6-feet of 5-conductor STOW-A cable
LSJ2B**M**-7N = LSJ2B-7N with 6 feet of 9-conductor STOOW-A cable
LSA1A**B** = LSA1A with a 5-pin mini-style connector
LSA1A**DD** = LSA1A with a 4-pin micro-style connector

NOTE: Connector versions available with 1/2 in conduit only.

Wiring Diagrams (Styles B&G)

Connectors = Numbers (mini-style)
Cables = Colors

SINGLE POLE
CABLE OR MINI STYLE CONNECTOR

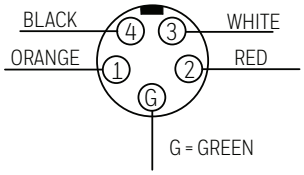

1NC/1NO
Circuitry

G = Ground
Same Polarity

Electrical Ratings:
Connector Versions

Mini	600 VAC, 7A
Micro	300 VAC, 3A

Wiring Diagrams (Styles M&R)

DOUBLE POLE
CABLE OR MINI STYLE CONNECTOR

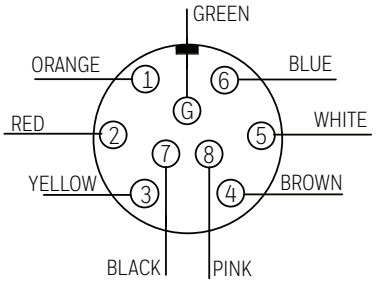

Wiring Diagram (Style A)

Same Polarity

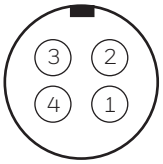

Wiring Diagram (Style DD)

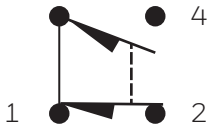

Pin 3 not connected
Same Polarity

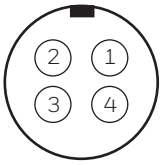

2NC/2NO center neutral

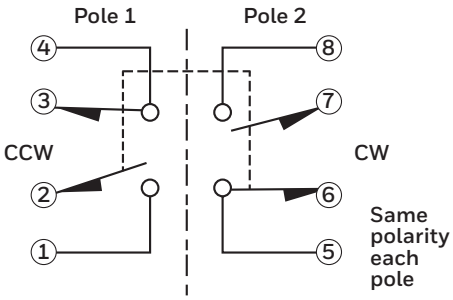

2NC/2NO

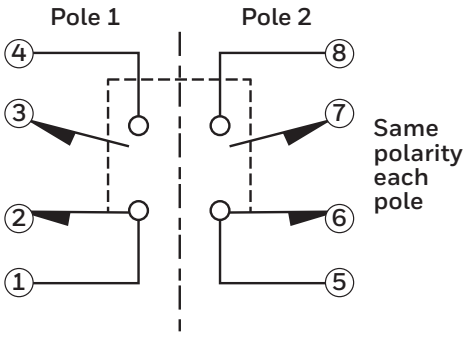

2NC/2NO sequential

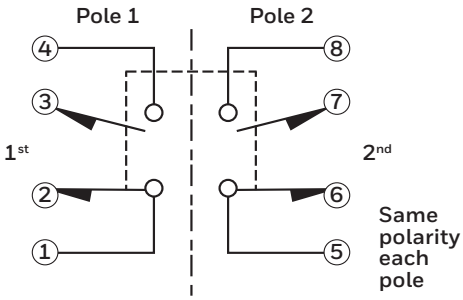

ELECTROMECHANICAL SWITCHES
Definitions below explain the meaning of operating characteristics. Characteristics shown in tables were chosen as most significant. They are taken at normal room temperature and humidity. These may vary as temperature and humidity conditions differ. Sketches show how characteristics are measured for in-line plunger actuation and rotary actuation.

Linear dimensions for in-line actuation are from top of plunger to a reference line, usually the center of the mounting holes. Rotary actuated HDLS limit switches have the characteristics in degrees of angular rotation.

Differential Travel (D.T.) – Plunger or actuator travel from point where contacts "snap-over" to point where they "snapback."

Free Position (F.P.) – Position of switch plunger or actuator when no external force is applied (other than gravity).

Full Overtravel Force – Force required to attain full overtravel of actuator.

Operating Position (O.P.) – Position of switch plunger or actuator at which point contacts snap from normal to operated position. Note that in the case of flexible or adjustable actuators, the operating position is measured from the end of the lever or its maximum length. Location of operating position measurement shown on mounting dimension drawings.

Operating Force (O.F.) – Amount of force applied to switch plunger or actuator to cause contact "snap-over." Note in the case of adjustable actuators, the force is measured from the maximum length position of the lever.

Overtravel (O.T.) – Plunger or actuator travel safely available beyond operating position.

Pretravel (P.T.) – Distance or angle traveled in moving plunger or actuator from free position to operating position.

Release Force (R.F.) – Amount of force still applied to switch plunger or actuator at moment contacts snap from operated position to unoperated position.

Total Travel (T.T.) – Distance from actuator free position to overtravel limit position.

ROTARY ACTUATION

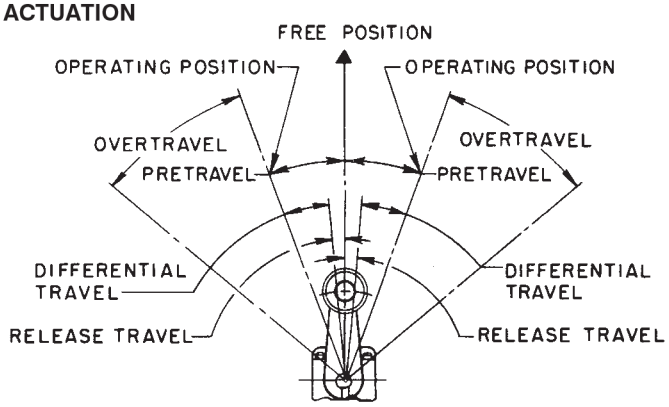

IN-LINE PLUNGER ACTUATION

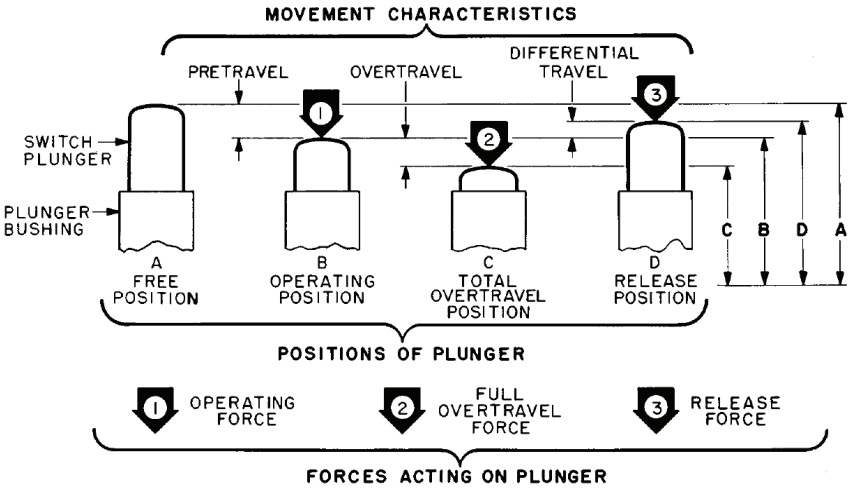

Bar Chart Description (Inline and Rotary)

NC = Normally closed contact(s)
NO = Normally open contact (s)

■ contact closed
□ contact open

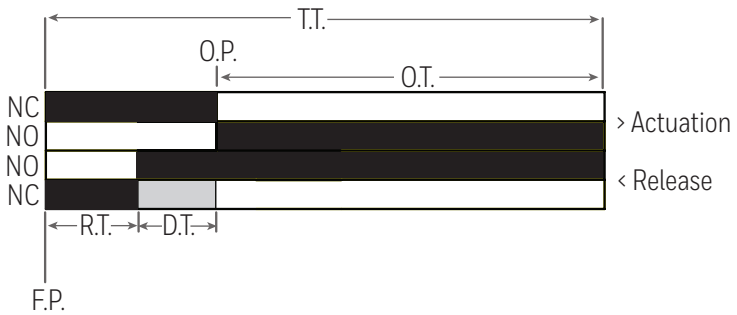

MICRO SWITCH Heavy-Duty Limit Switch, HDLS Series

Table 3. Side Rotary • MICRO SWITCH HDLS Series Order Guide/Recommended Listings

	Standard (LSA)		Low Differential (LSP)		5° Pretravel (LSU)	
Description	Standard		Low pretravel & low differential travel		Low pretravel	
	SPDT	**DPDT**	**SPDT**	**DPDT**	**SPDT**	**DPDT**
Contact closed ■ Contact open □	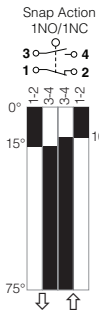	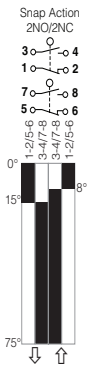	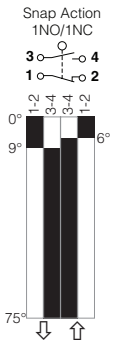	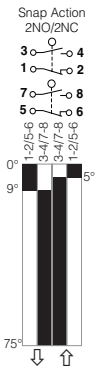	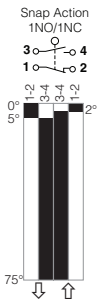	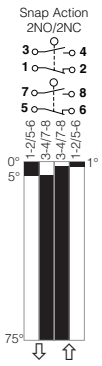
Pretravel	15° max.	15° max.	9° max.	9° max.	5° max.	5° max.
Different. travel	5° max.	7° max.	3° max.	4° max.	3° max.	4° max.
Overtravel	60° min.	60° min.	66° min.	66° min.	70° min.	70° min.
Oper. torque	0,45 Nm [4 in-lb] max.		0,45 Nm [4 in-lb] max.		0,45 Nm [4 in-lb] max.	
Action	CW & CCW (Momentary)					
Op. temp range[3]	-12°C to 121°C [10°F to 250°F] (for low temp, high temp, or preleaded versions, see pages 8-9)					

Circuitry		Contacts	Body Style[2]	Conduit (NPT)	Options			
SPDT	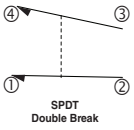	Silver	Plug-in	0.5 in		**LSA1A**	**LSP1A**	**LSU1A**
		Gold[4]	Plug-in	0.5 in		**LSA1E**	**LSP1E**	**LSU1E**
		Silver	Plug-in	0.5 in	120 V Ind. lite[1]	**LSA5A**	**LSP5A**	**LSU5A**
		Silver	Plug-in	0.5 in	240 V Ind. lite[1]	**LSA8A**	**LSP8A**	**LSU8A**
		Silver	Plug-in	0.5 in	24 V LED 1.5 mA max. auto polarity[1]	**LSA9A**	**LSP9A**	**LSU9A**
		Silver	Non-plug-in	0.5 in		**LSA3K**	**LSP3K**	**LSU3K**
DPDT	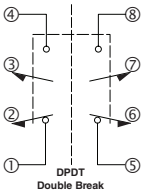	Silver	Plug-in	0.75 in		**LSA2B**	**LSP2B**	**LSU2B**
		Gold[4]	Plug-in	0.75 in		**LSA2S**	**–**	**–**
		Silver	Plug-in	0.5 in		**LSA6B**	**LSP6B**	**LSU6B**
		Gold[4]	Plug-in	0.5 in		**LSA6S**	**–**	**–**
		Silver	Plug-in	0.75 in	120 V Ind. lite[1]	**LSA2R**	**LSP2R**	**LSU2R**
		Silver	Non-plug-in	0.75 in		**LSA4L**	**LSP4L**	**LSU4L**
		Silver	Non-plug-in	0.5 in		**LSA7L**	**LSP7L**	**LSU7L**

[1] Use at voltage indicated for light. Wired to NO circuit. Upper temperature limit for lighted units is 93°C [200°F]
[2] Plug-in listings include base receptacle
[3] Completely fluorocarbon sealed switches are preferred for use in temperatures above 93°C [200°F]
[4] Gold-plated contacts

NOTE: Same polarity each pole.

To order a fluorocarbon sealed switch, insert the letters **Y** and **C** into the catalog listing as follows. The LSA1A limit switch is changed to a LS**Y**A**C**1A limit switch.
To order a low temperature, fluorosilicone sealed switch, insert the letters **Y** and **B** into the catalog listing as follows. The LSA1A limit switch is changed to a LS**Y**A**B**1A limit switch.

Table 4. Side Rotary • MICRO SWITCH HDLS Series Order Guide/Recommended Listings

	Low Torque (LSR)		Low Diff., Low Torque (LSH)	
Description	Low operating torque		Low pretravel and low torque	
	SPDT	**DPDT**	**SPDT**	**DPDT**
Contact closed ■ Contact open □	Snap Action 1NO/1NC 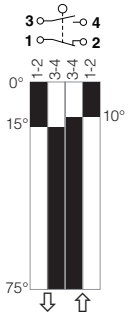	Snap Action 2NO/2NC 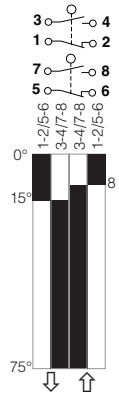	Snap Action 1NO/1NC 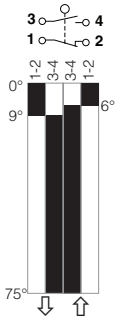	Snap Action 2NO/2NC 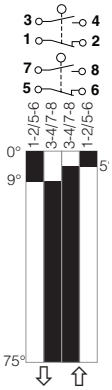
Pretravel	15° max.	15° max.	9° max.	9° max.
Different. travel	5° max.	7° max.	3° max.	4° max.
Overtravel	60° min.	60° min.	66° min.	66° min.
Oper. torque	0,19 Nm [1.7 in-lb] max.		0,19 Nm [1.7 in-lb] max.	
Action	CW & CCW (Momentary)			
Op. temp range[3]	-1°C to 121°C [30°F to 250°F] (for low temp, high temp, or preleaded versions, see pages 8-9)			

Circuitry		Contacts	Body Style[2]	Conduit (NPT)	Options		
SPDT	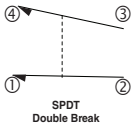 SPDT Double Break	Silver	Plug-in	0.5 in		**LSR1A**	**LSH1A**
		Gold[4]	Plug-in	0.5 in		**LSR1E**	**LSH1E**
		Silver	Plug-in	0.5 in	120 V Ind. lite[1]	**LSR5A**	**LSH5A**
		Silver	Plug-in	0.5 in	240 V Ind. lite[1]	**LSR8A**	**LSH8A**
		Silver	Plug-in	0.5 in	24 V LED 1.5 mA max. auto polarity[1]	**LSR9A**	**LSH9S**
		Silver	Non-plug-in	0.5 in		**LSR3K**	**LSH3K**
DPDT	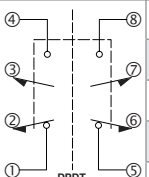 DPDT Double Break	Silver	Plug-in	0.75 in		**LSR3B**	**LSH2B**
		Silver	Plug-in	0.5 in		**LSR6B**	**LSH6B**
		Silver	Plug-in	0.75 in	120 V Ind. lite[1]	**LSR2R**	**LSH2R**
		Silver	Non-plug-in	0.75 in		**LSR4L**	**LSH4L**
		Silver	Non-plug-in	0.5 in		**LSR7L**	**LSHJ7L**

[1] Use at voltage indicated for light. Wired to NO circuit. Upper temperature limit for lighted units is 93°C [200°F]
[2] Plug-in listings include base receptacle
[3] Completely fluorocarbon sealed switches are preferred for use in temperatures above 93°C [200°F]
[4] Gold-plated contacts

NOTE: Same polarity each pole.

To order a fluorocarbon sealed switch, insert the letters **Y** and **C** into the catalog listing as follows. The LSA1A limit switch is changed to a LS**Y**A**C**1A limit switch.
To order a low temperature, fluorosilicone sealed switch, insert the letters **Y** and **B** into the catalog listing as follows. The LSA1A limit switch is changed to a LS**Y**A**B**1A limit switch.

MICRO SWITCH Heavy-Duty Limit Switch, HDLS Series

Table 5. Side Rotary • MICRO SWITCH HDLS Series Order Guide/Recommended Listings

	Maint. Contact (LSQ)	Maint. Contact (LSN)	Center Neutral (LSM)	Sequence Action (LSL)
Description	Maint. 360° Alt. Action	Maintained, 2-pos[1,2]. Std.	Center Neutral (Pole 1 operates CCW; Pole 2 operates CW)	Sequential (Pole 1 operates before Pole 2, either CW, CCW, or both)
	SPDT	**SPDT DPDT**	**DPDT**	**DPDT**
Contact closed ■ Contact open □	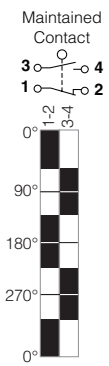	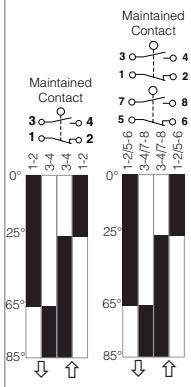	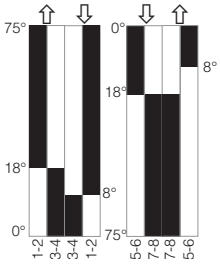	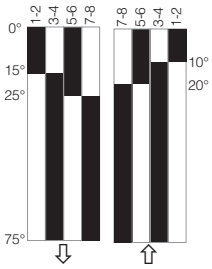
Pretravel	65° max.	65° max.	18° max.	Pole 1: 15° Pole 2: add'l 10°
Different. travel	40° max.	40° max.	10° max.	each pole: 5°
Overtravel	20° min.	20° min.	57° min.	48° min.
Oper. torque	0,45 Nm [4 in-lb]		0,45 Nm [4 in-lb]	0,45 Nm [4 in-lb]
Action	Maintained		CW & CCW (Momentary)	
Op. temp range[6]	-1°C to 121°C [30°F to 250°F] (for low temp, high temp, or preleaded versions, see pages 8-9)			-12°C to 121°C [10°F to 250°F] (for low temp, high temp, or preleaded versions, see pages 8-9)

Circuitry		Contacts	Body Style[5]	Conduit (NPT)	Options				
SPDT	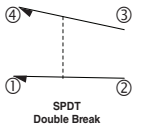	Silver	Plug-in	0.5 in		**LSQ300**	**LSN1A**	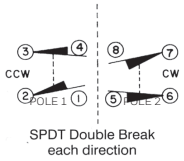	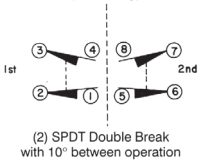
		Gold[3]	Plug-in	0.5 in		–	**LSN1E**		
		Silver	Plug-in	0.5 in	120 V Ind. lite[4]	–	**LSN5A**		
		Silver	Plug-in	0.5 in	240 V Ind. lite[4]	–	**LSN8A**		
		Silver	Non-plug-in	0.5 in		–	**LSN3K**		
DPDT	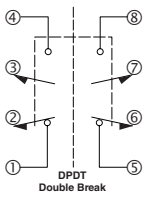	Silver	Plug-in	0.75 in		–	**LSN2B**	**LSM2D**	**LSL2C**
		Silver	Plug-in	0.5 in		–	**LSN6B**	**LSM6D**	**LSL6C**
		Gold[3]	Plug-in	0.5 in		–	–	**LSM6U**	–
		Silver	Non-plug-in	0.75 in		–	**LSN4L**	**LSM4N**	**LSL4M**
		Silver	Non-plug-in	0.5 in		–	**LSN7L**	**LSM7N**	**LSL7M**

[1] Mechanical trip before electrical trip.
[2] Total travel is approximately 80° max. Maintained contact switch normally used with LSZ53 yoke actuator.
[3] Gold-plated contacts
[4] Use at voltage indicated for light. Wired to NO circuit. Upper temperature limit for lighted units is 93°C [200°F].
[5] Plug-in listings include base receptacle
[6] Completely fluorocarbon-sealed switches are preferred for temperatures above 93°C [200°F].

NOTE: Same polarity each pole.

To order a fluorocarbon sealed switch, insert the letters **Y** and **C** into the catalog listing as follows. The LSA1A limit switch is changed to a LS**Y**A**C**1A limit switch.
To order a low temperature, fluorosilicone sealed switch, insert the letters **Y** and **B** into the catalog listing as follows. The LSA1A limit switch is changed to a LS**Y**A**B**1A limit switch.

Figure 2. MICRO SWITCH HDLS side rotary (single pole) dimensions

SPDT Plug-in (mm[in])

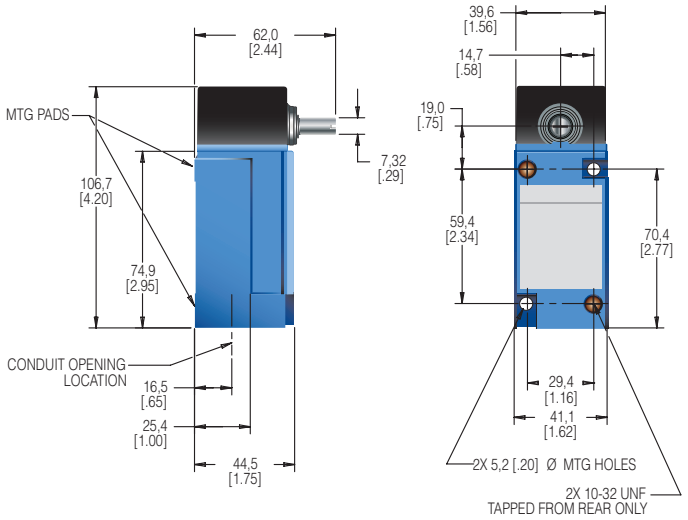

Figure 3. MICRO SWITCH HDLS side rotary (double pole) dimensions

DPDT Plug-in (mm[in])

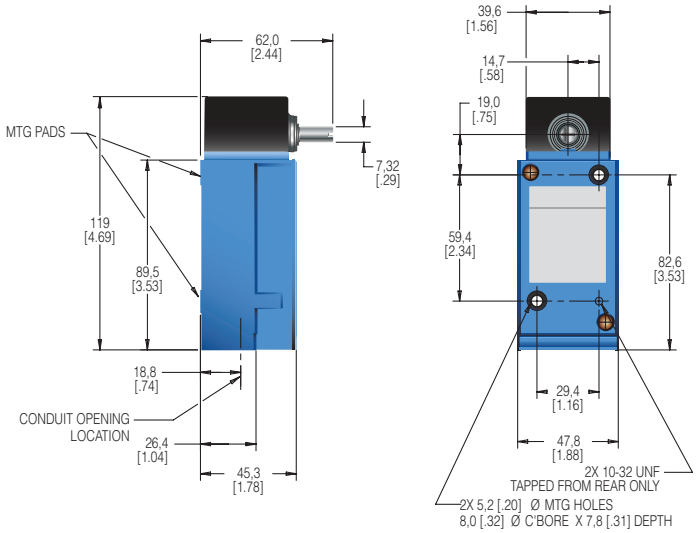

SPDT Non-plug-in (mm[in])

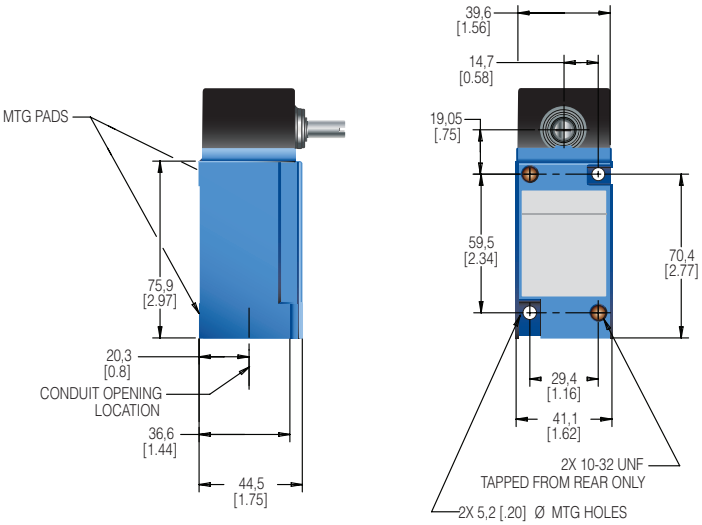

DPDT Non-plug-in (mm[in])

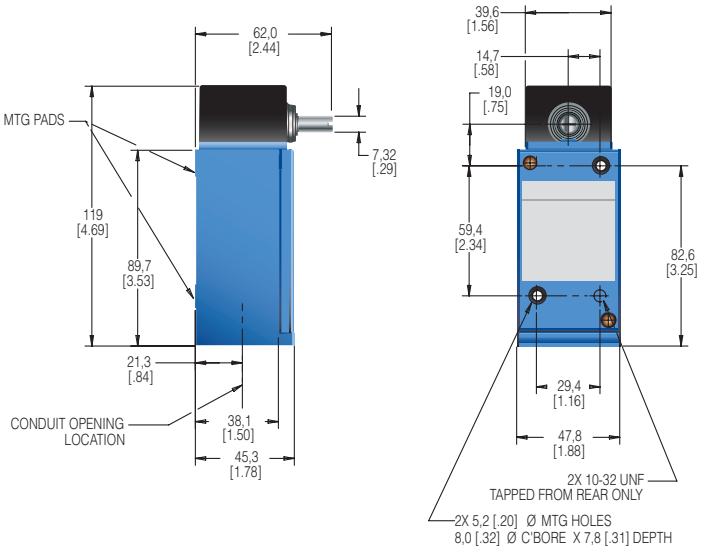

MICRO SWITCH Heavy-Duty Limit Switch, HDLS Series

Table 6. Top Rotary • MICRO SWITCH HDLS Series Order Guide/Recommended Listings

	Top Rotary (LSB)	
Description	Increased overtravel (100° min.). Uses same levers as side rotary	
	SPDT	**DPDT**
Contact closed ■ **Contact open □**	Snap Action 1NO/1NC 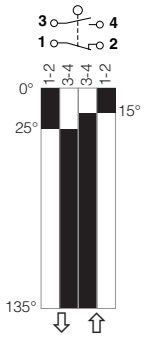 	Snap Action 2NO/2NC 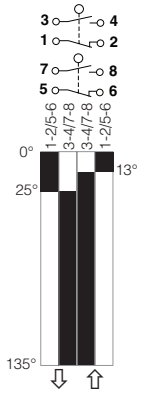
Pretravel	25° max.	25° max.
Different. travel	10° max.	12° max.
Overtravel	110° min.	110° min.
Oper. torque	0,28 Nm [2.5 in lb] max.	
Action	CW and CCW (Momentary)	
Op. temp range[3]	-12°C to 121°C [10°F to 250°F] (for low temp, high temp, or preleaded versions, see pages 8-9)	

Circuitry		Contacts	Body Style[2]	Conduit (NPT)	Options		
SPDT	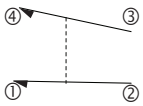 SPDT Double Break	Silver	Plug-in	0.5 in		**LSB1A**	–
		Gold[4]	Plug-in	0.5 in		**LSB1E**	–
		Silver	Plug-in	0.5 in	120 V Ind. lite[1]	**LSB5A**	–
		Silver	Plug-in	0.5 in	240 V Ind. lite[1]	**LSB8A**	–
		Silver	Plug-in	0.5 in	24 V LED 1.5 mA max. auto polarity[1]	**LSB9A**	–
		Silver	Non-plug-in	0.5 in		**LSB3K**	–
DPDT	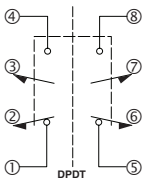 DPDT Double Break	Silver	Plug-in	0.75 in		–	**LSB2B**
		Silver	Plug-in	0.5 in		–	**LSB6B**
		Silver	Plug-in	0.75 in	120 V Ind. lite[1]	–	**LSB2R**
		Silver	Non-plug-in	0.75 in		–	**LSB4L**
		Silver	Non-plug-in	0.5 in		–	**LSB7L**

[1] Use at voltage indicated for light. Wired to NO circuit. Upper temperature limit for lighted units is 93°C [200°F]
[2] Plug-in listings include base receptacle
[3] Completely fluorocarbon sealed switches are preferred for use in temperatures above 93°C [200°F]
[4] Gold-plated contacts

NOTE: Same polarity each pole.

To order a fluorocarbon sealed switch, insert the letters **Y** and **C** into the catalog listing as follows. The LSA1A limit switch is changed to a LS**Y**A**C**1A limit switch.
To order a low temperature, fluorosilicone sealed switch, insert the letters **Y** and **B** into the catalog listing as follows. The LSA1A limit switch is changed to a LS**Y**A**B**1A limit switch.

Figure 4. MICRO SWITCH HDLS top rotary (single pole) dimensions

SPDT Plug-in (mm[in])

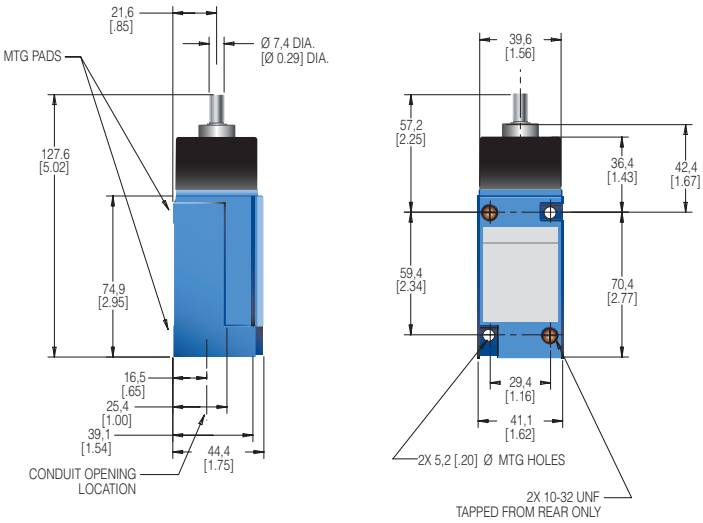

SPDT Non-plug-in (mm[in])

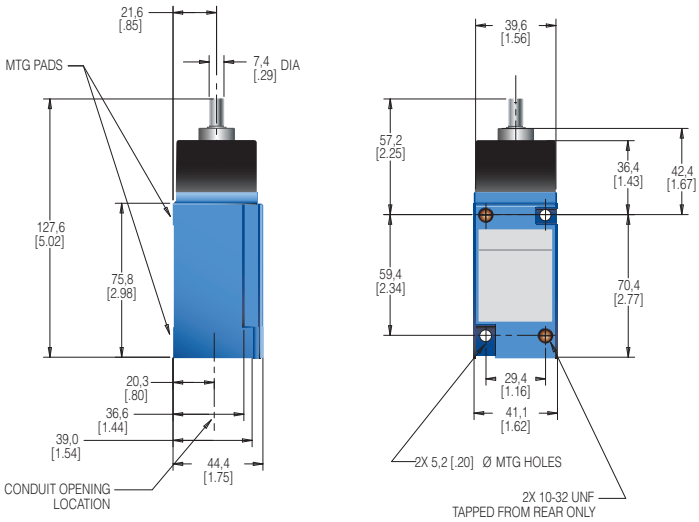

Figure 5. MICRO SWITCH HDLS top rotary (double pole) dimensions

DPDT Plug-in (mm[in])

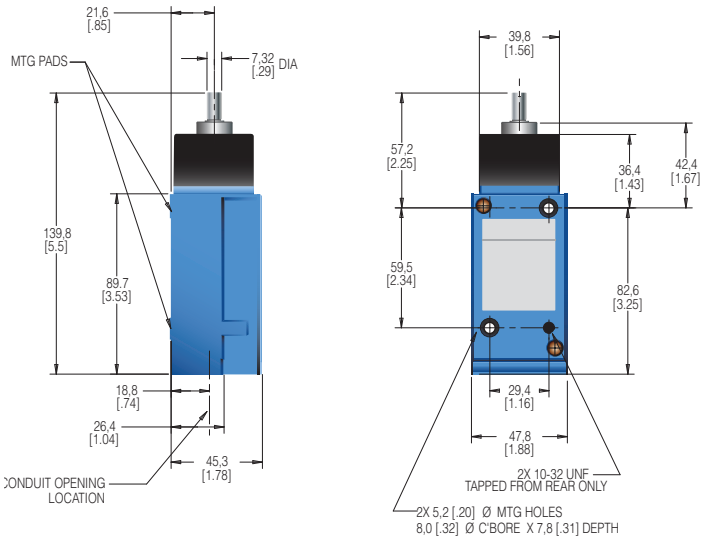

DPDT Non-plug-in (mm[in])

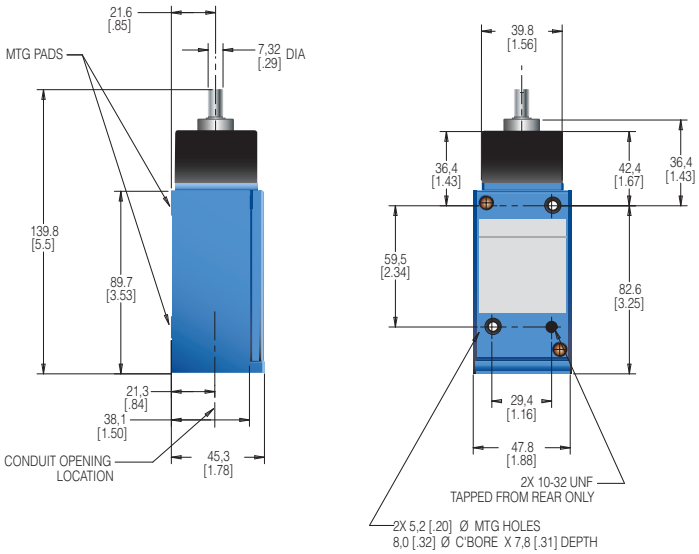

Table 7. Common levers for use with MICRO SWITCH HDLS Rotary Switches

Levers for use with side or top rotary actuated switches are available in a wide choice of sizes and materials. The most common listings are shown below. Rollers may be on either side of the lever to best match the external acutating mechanism.

LSZ51A&C fixed rotary lever, nylon roller, front/backl	**LSZ51B&D** fixed rotary lever, steel roller, front/back	**LSZ59A,LSZ59B, LSZ59C,LSZ59D** short fixed lever, front/back			**LSZ69CA** spoke lever - 152 mm [6 in]		
		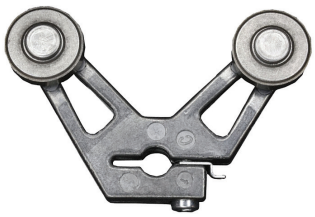					
LSZ55A,LSZ55B, LSZ55C,LSZ55D offset lever, front/back	**LSZ60** one-way roller lever	**LSZ53A, LSZ53B, LSZ53D** yoke lever, nylon and steel rollers, front/back placement		**LSZ54R** spring wire 305 mm [12 in]			
		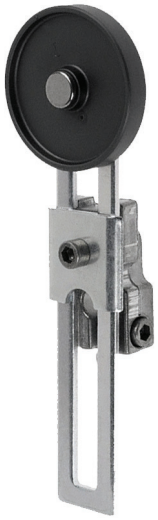					
LSZ52A, LSZ52B, LSZ52C, LSZ52D adj. lever, nylon/steel, front/back	**LSZ52J** adjustable lever, nylon roller Ø 25,4 mm [Ø 1 in]	**LSZ52K** adjustable lever, nylon roller Ø 38,1 mm [Ø 1.5 in]	**LSZ54M** aluminum rod Ø 140 mm [Ø 5.5 in]	**LSZ61** loop 152 mm [6 in]	**LSZ67AA*** Plastic conveyor roller	**LSZ68** plastric rod w/ spring 305 mm [12 in]	**LSZ54N** stainless steel rod 330 mm [13 in]

* May require orientation of switch and lever to enable gravity to help restore free position of switch.

Table 8. HDLS Series Actuator Code Table (see previous page)

	Catalog Listing	Material	Rod/Roller Dia. mm [in]	Rod/Roller Width mm [in]	Roller Mounting
	Fixed 38,1 mm [1.5 in] radius				
	–	Rollerless	n/a	n/a	n/a
	LSZ51A	Nylon	19 [0.75]	6,35 [0.25]	Front
	LSZ51B	Steel	19 [0.75]	6,35 [0.25]	Front
	LSZ51C	Nylon	19 [0.75]	6,35 [0.25]	Back
	LSZ51D	Steel	19 [0.75]	6,35 [0.25]	Back
	LSZ51F	Nylon	25,4 [1.0]	12,7 [0.50]	Front
	LSZ51G	Nylon	38,1 [1.5]	6,35 [0.25]	Front
	LSZ51J	Nylon	25,4 [1.0]	12,7 [0.50]	Back
	LSZ51L	Ball bearing	19 [0.75]	6,35 [0.25]	Back
	LSZ51M	Nylon	19 [0.75]	31,7 [1.25]	Back
	LSZ51N	Steel	19 [0.75]	31,7 [1.25]	Front
	LSZ51P	Nylon	19 [0.75]	12,7 [0.50]	Front
	Adjustable 38,1 mm to 89,0 mm [1.5 in to 3.5 in] radius				
	–	Rollerless	n/a	n/a	n/a
	LSZ52A	Nylon	19 [0.75]	6,35 [0.25]	Back
	LSZ52B	Steel	19 [0.75]	6,35 [0.25]	Back
	LSZ52C	Nylon	19 [0.75]	6,35 [0.25]	Front
	LSZ52D	Steel	19 [0.75]	6,35 [0.25]	Front
	LSZ52E	Nylon	19 [0.75]	33,0 [1.30]	Front
	LSZ52J	Nylon	25,4 [1.0]	12,7 [0.50]	Front
	LSZ52K	Nylon	38,1 [1.5]	6,35 [0.25]	Front
	LSZ52L	Ball bearing	19 [0.75]	6,35 [0.25]	Front
	LSZ52M	Nylon	50,8 [2.0]	6,35 [0.25]	Front
	LSZ52N	Nylon	19 [0.75]	12,7 [0.50]	Front
	Yoke – 38,1 mm [1.5 in] radius				
	LSZ53A	Nylon	19 [0.75]	6,35 [0.25]	Front/Back
	LSZ53B	Steel	19 [0.75]	6,35 [0.25]	Front/Back
	LSZ53D	Steel	19 [0.75]	6,35 [0.25]	Front/Front
	LSZ53E	Nylon	19 [0.75]	6,35 [0.25]	Back/Front
	LSZ53M	Nylon	19 [0.75]	31,7 [1.25]	Back/Front
	LSZ53P	Steel	19 [0.75]	6,35 [0.25]	Back/Back
	LSZ53S	Nylon	19 [0.75]	6,35 [0.25]	Back/Back
	Rod				
	–	Hub only	n/a	n/a	n/a
	LSZ54M	Alum, 140 mm [5.5 in]	Ø 3,2 [Ø 0.125]	n/a	n/a
	LSZ54N	Stainless, 330 mm [13 in]	Ø 3,2 [Ø 0.125]	n/a	n/a
	LSZ54R	SST spring wire, 305 mm [12 in]	Ø 1,9 [Ø 0.075]	n/a	n/a
	LSZ54V	Flex cable (tin plated steel), 122 mm [4.8 in]	Ø 4,8 [Ø 0.19]	n/a	n/a
	LSZ54P	Plastic rod, 533,4 mm [21 in]	Ø 6,85 [Ø 0.27]	n/a	n/a
	LSZ54W	Plastic rod, 183 mm [7.2 in]	Ø 6,85 [Ø 0.27]	n/a	n/a
	LSZ54T	330 [13] stainless steel	Ø 4,8 [Ø 0.19]	n/a	n/a
	Spoke				
	LSZ69CA	152 mm [6.0 in] Stainless	3,2 [0.125]	n/a	n/a

	Catalog Listing	Material	Rod/Roller Dia. mm [in]	Rod/Roller Width mm [in]	Roller Mounting
	Fixed 38,1 mm [1.5 in] radius				
	–	Rollerless	n/a	n/a	n/a
	LSZ55A	Nylon	19 [0.75]	6,35 [0.25]	Back
	LSZ55B	Steel	19 [0.75]	6,35 [0.25]	Back
	LSZ55C	Nylon	19 [0.75]	6,35 [0.25]	Front
	LSZ55D	Steel	19 [0.75]	6,35 [0.25]	Front
	LSZ55E	Nylon	19 [0.75]	12,7 [0.50]	Front
	LSZ55K	Nylon	38,1 [1.5]	6,35 [0.25]	Front
	Short fixed - 33 mm [1.3 in] radius				
	LSZ59A	Nylon	19 [0.75]	6,35 [0.25]	Front
	LSZ59B	Steel	19 [0.75]	6,35 [0.25]	Front
	LSZ59C	Nylon	19 [0.75]	6,35 [0.25]	Back
	LSZ59D	Steel	19 [0.75]	6,35 [0.25]	Back
	38,1 mm [1.5 in] radius one-way roller lever				
	LSZ60A	Nylon	19 [0.75]	6,35 [0.25]	Front
	LSZ60B	Steel	19 [0.75]	6,35 [0.25]	Front
	Flexible loop				
	LSZ61	Ø 4,8 [Ø 0.19] Plastic	152 mm [6 in] flexible loop		
	LSZ618	Ø 4,8 [Ø 0.19] Plastic	241 mm [9.5 in] flexible loop		
	LSZ54	Hub only	n/a	n/a	n/a
	Spring rod				
	LSZ68	Delrin rod, 305 [12]	Ø 6,35 [Ø 0.25]	n/a	n/a
	LSZ617	Delrin rod, 406 [16]	Ø 6,35 [Ø 0.25]	n/a	n/a
	LSZ686	Delrin rod, 152 [6]	Ø 6,35 [Ø 0.25]	n/a	n/a
	Rubber roller levers				
	LSZ51Y 38,1 mm [1.5 in] radius (std.)	Rubber	50 [2.0]	12,7 [0.50]	front
	LSZ55Y 38,1 mm [1.5 in] radius (offset)	Rubber	50 [2.0]	12,7 [0.50]	front
	LSZ52Y 38,1 mm to 89,0 mm [1.5 in to 3.5 in] radius (adjustable)	Rubber	50 [2.0]	12,7 [0.50]	front
	Plastic roller levers				
	LSZ67AA* (conveyor)	Plastic	38,1 [1.5]	96,5 [3.8]	n/a

* may require orientation of switch and lever to enable gravity to help restore free position of switch.

MICRO SWITCH HDLS Side Rotary Levers' Cam Tracking

Levers for side and top rotary switches are normally ordered as separate catalog listings. They also may be ordered by including a suffix to the switch catalog listing (see nomenclature tree in this document) and adding the lever price.

Figure 6. LSZ51 type levers cam tracking

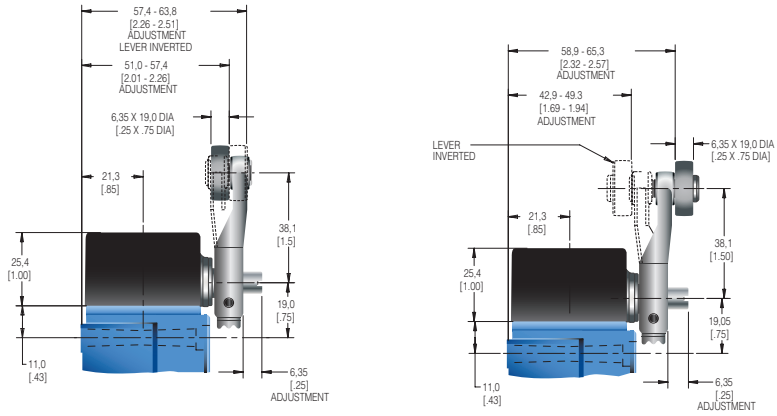

Figure 7. LSZ52 type levers cam tracking

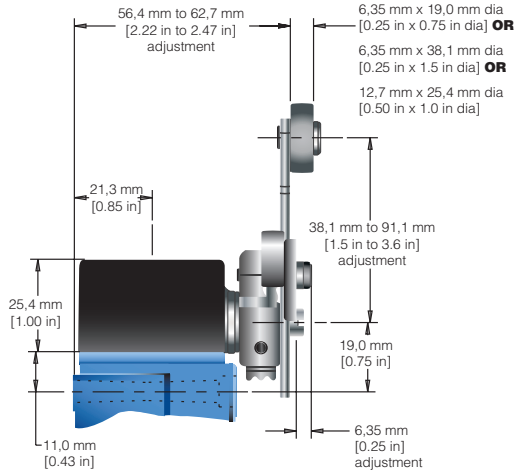

Figure 8. LSZ54 type levers cam tracking

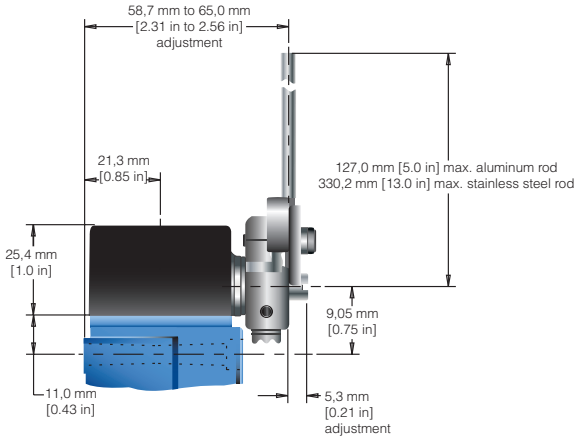

Figure 9. LSZ55 type levers cam tracking

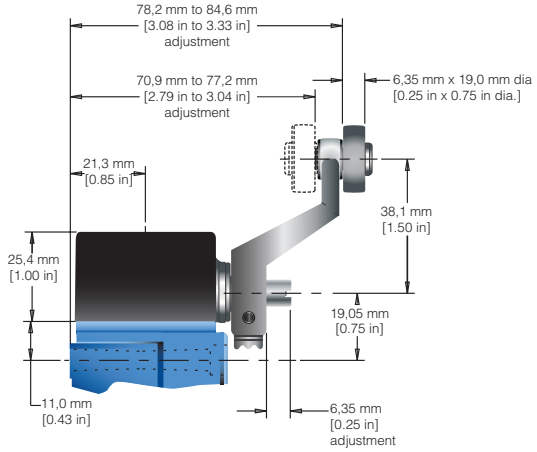

Table 9. Top Plungers • MICRO SWITCH HDLS Series Order Guide/Recommended Listings

All top plungers are momentary action.

	Plain (LSC)		Roller (LSD)		Adjustable (LSV)	
Description	Top plain plunger for in-line operating motion		Roller plunger can be rotated at 90° increments		Adjustable top plain plunger	
	SPDT	**DPDT**	**SPDT**	**DPDT**	**SPDT**	**DPDT**
Contact closed ■ Contact open □	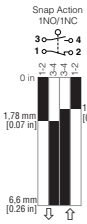	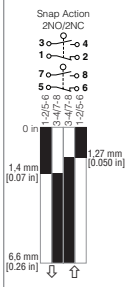	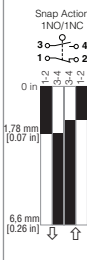	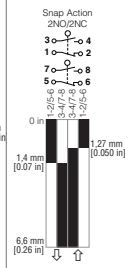	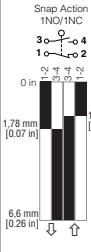	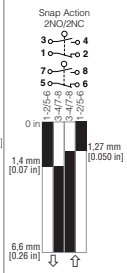
Pretravel	1,78 mm [0.07 in]					
Different. travel	0,38 mm [0.015 in]	0,51 mm [0.02 in]	0,38 mm [0.015 in]	0,51 mm [0.02 in]	0,38 mm [0.015 in]	0,51 mm [0.02 in]
Overtravel	4,83 mm [0.19 in]					
Operating point (nom.)	45,8 mm [1.805 in]		55,9 mm [2.20 in]		53 mm to 59 mm [2.08 in to 2.34 in]	
Operating force	17,8 N [4 lb] max.					
Op. temp range[3]	-12°C to 93°C [10°F to 200°F] (for low temp, high temp, or preleaded versions, see pages 8-9)					

Circuitry		Contacts	Body Style[2]	Conduit (NPT)	Options			
SPDT	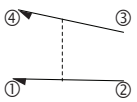 SPDT Double Break	Silver	Plug-in	0.5 in		**LSC1A**	**LSD1A**	**LSV1A**
		Gold[4]	Plug-in	0.5 in		**LSC1E**	**LSD1E**	**LSV1E**
		Silver	Plug-in	0.5 in	120 V Ind. lite[1]	**LSC5A**	**LSD5A**	**LSV5A**
		Silver	Plug-in	0.5 in	240 V Ind. lite[1]	**LSC8A**	**LSD8A**	**LSV8A**
		Silver	Non-plug-in	0.5 in		**LSC3K**	**LSD3K**	**LSV3K**
DPDT	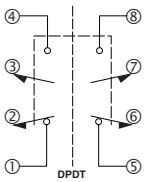 DPDT Double Break	Silver	Plug-in	0.75 in		**LSC2B**	**LSD2B**	**LSV2B**
		Silver	Plug-in	0.5 in		**LSC2R**	**LSD2R**	**LSV2R**
		Silver	Plug-in	0.75 in	120 V Ind. lite[1]	**LSC6B**	**LSD6B**	**LSV6B**
		Silver	Non-plug-in	0.75 in		**LSC4L**	**LSD4L**	**LSV4L**
		Silver	Non-plug-in	0.5 in		**LSC7L**	**LSD7L**	**LSV7L**

[1] Use at voltage indicated for light. Wired to NO circuit. Upper temperature limit for lighted units is 93°C [200°F]
[2] Plug-in listings include base receptacle
[3] Completely fluorocarbon sealed switches are preferred for use in temperatures above 93°C [200°F]
[4] Gold-plated contacts

NOTE: Same polarity each pole.

To order a fluorocarbon sealed switch, insert the letters **Y** and **C** into the catalog listing as follows. The LSA1A limit switch is changed to a LS**Y**A**C**1A limit switch.
To order a low temperature, fluorosilicone sealed switch, insert the letters **Y** and **B** into the catalog listing as follows. The LSA1A limit switch is changed to a LS**Y**A**B**1A limit switch.

Figure 10. MICRO SWITCH HDLS LSC Series (single pole plunger dimensions

Figure 11. MICRO SWITCH HDLS LSC Series (double pole plunger dimensions

SPDT Plug-in (mm[in])

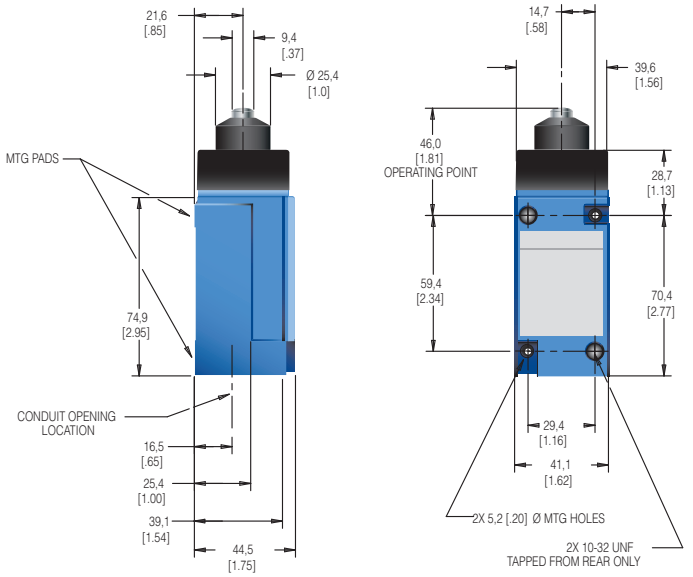

DPDT Plug-in (mm[in])

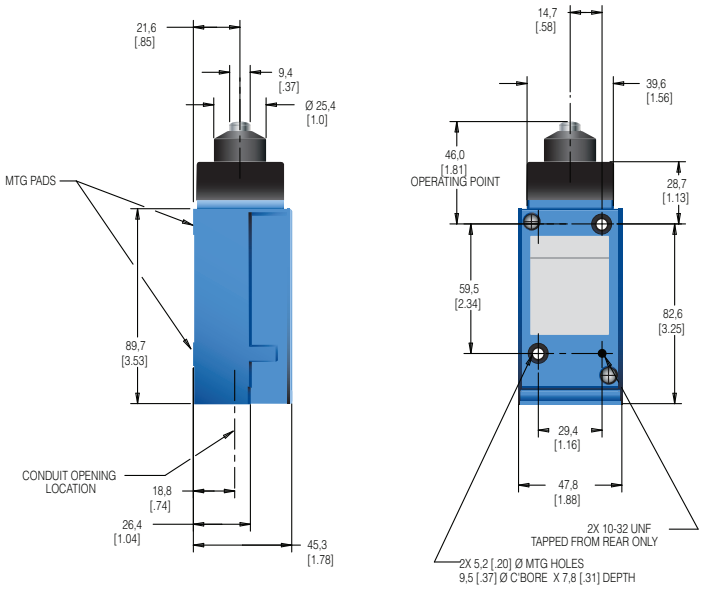

SPDT Non-plug-in (mm[in])

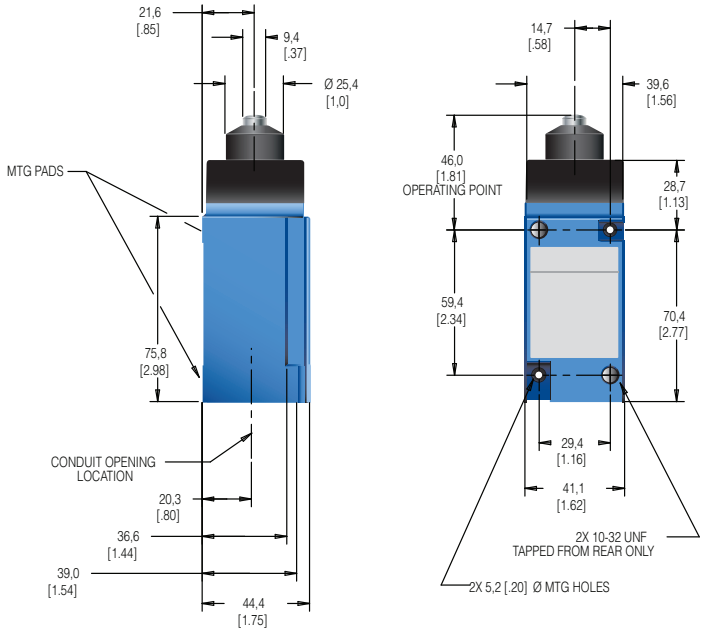

DPDT Non-plug-in (mm[in])

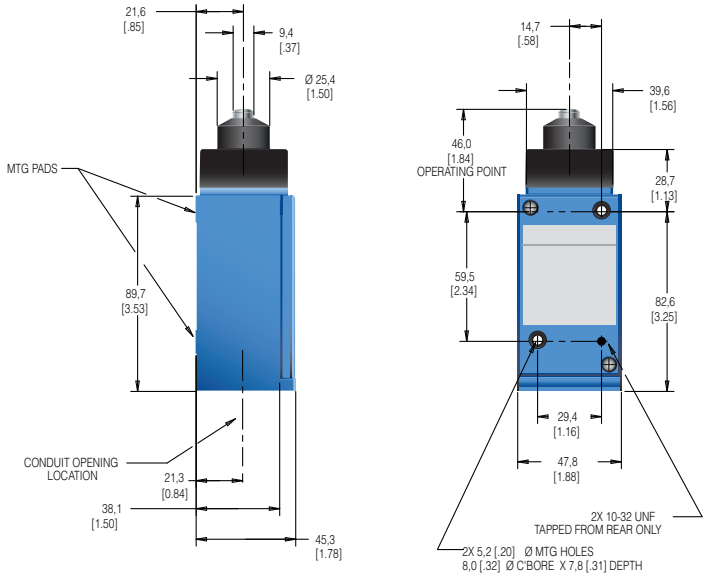

Figure 12. MICRO SWITCH HDLS LSD Series (single pole) top roller plunger dimensions

Figure 13. MICRO SWITCH HDLS LSD Series (double pole) top roller plunger dimensions

SPDT Plug-in (mm[in])

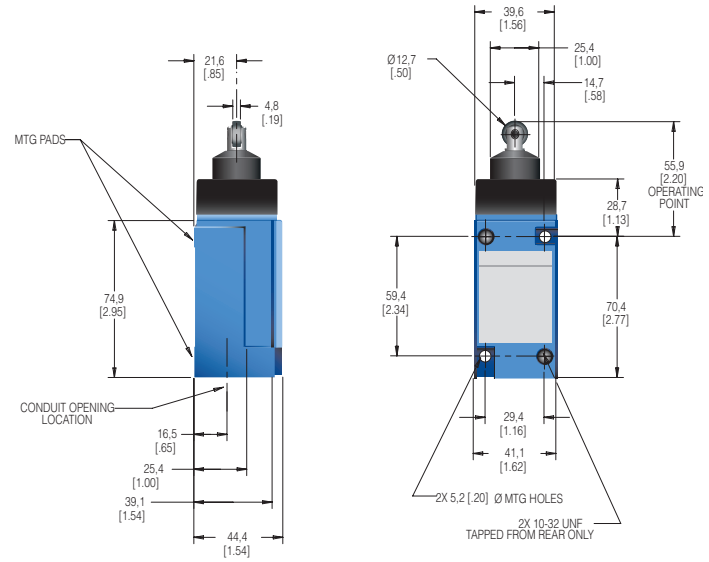

DPDT Plug-in (mm[in])

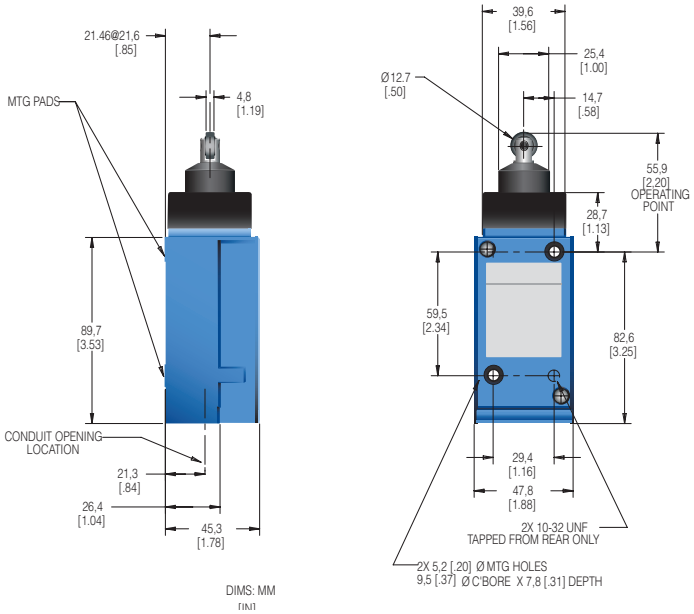

SPDT Non-plug-in (mm[in])

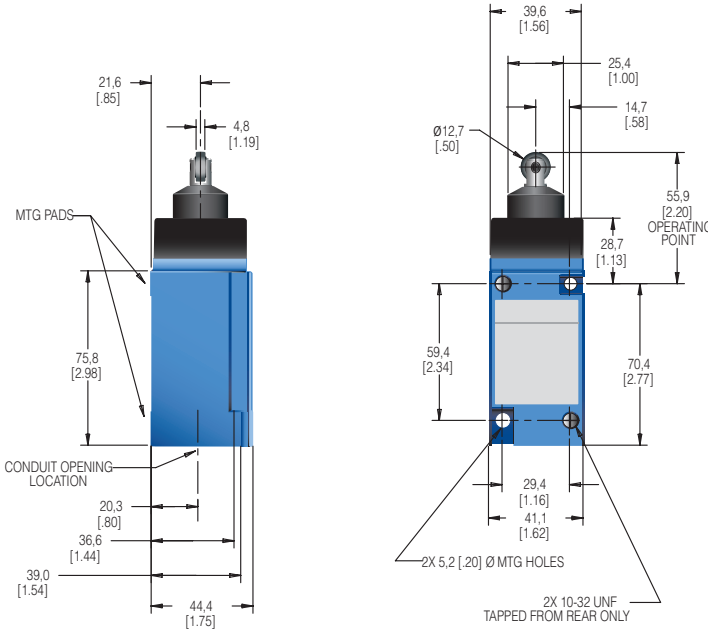

DPDT Non-plug-in (mm[in])

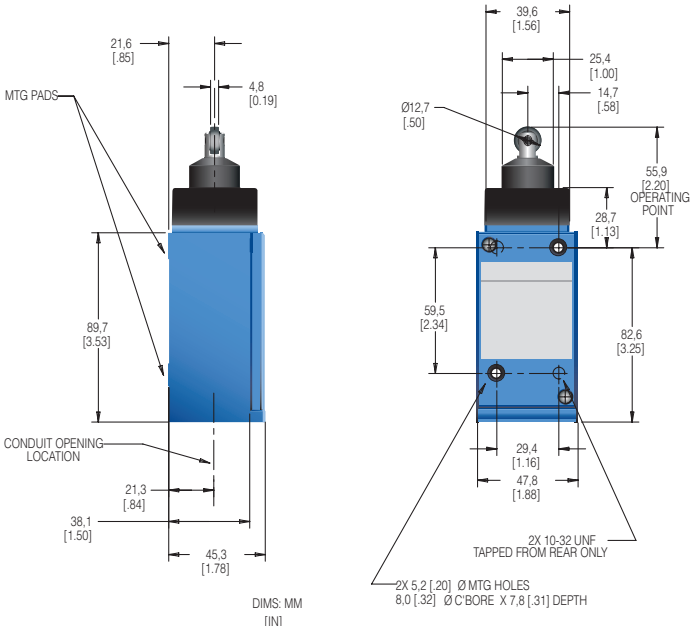

Figure 14. MICRO SWITCH HDLS LSV Series top adjustable plunger (single pole) dimensions

Figure 15. MICRO SWITCH HDLS LSV Series top adjustable plunger (double pole) dimensions

SPDT Plug-in (mm[in])

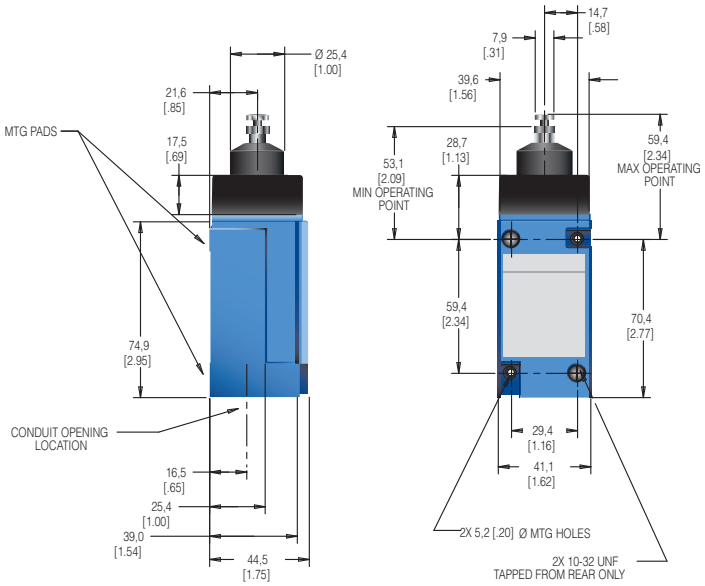

DPDT Plug-in (mm[in])

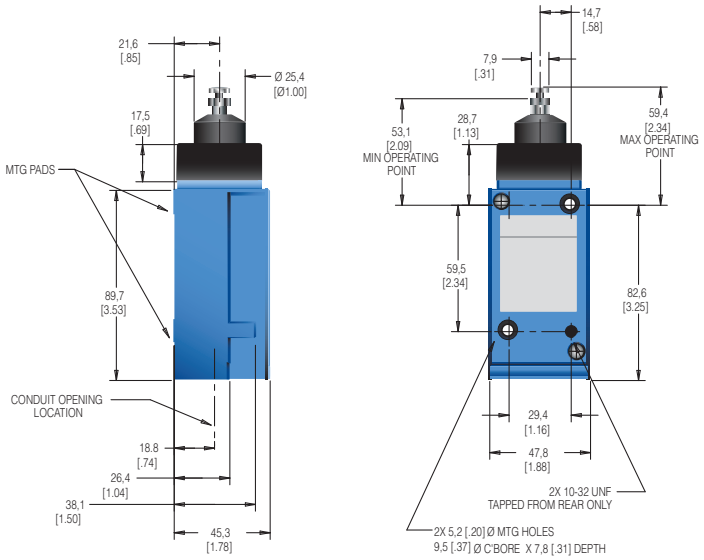

SPDT Non-plug-in (mm[in])

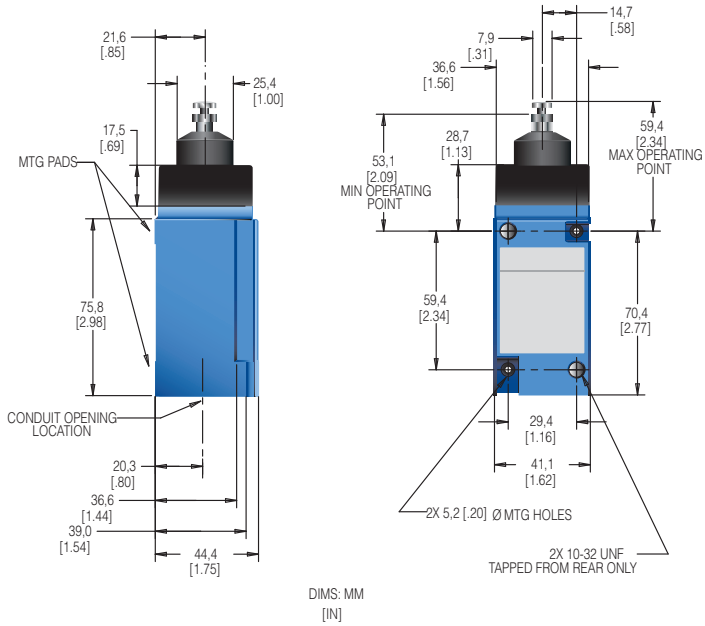

DPDT Non-plug-in (mm[in])

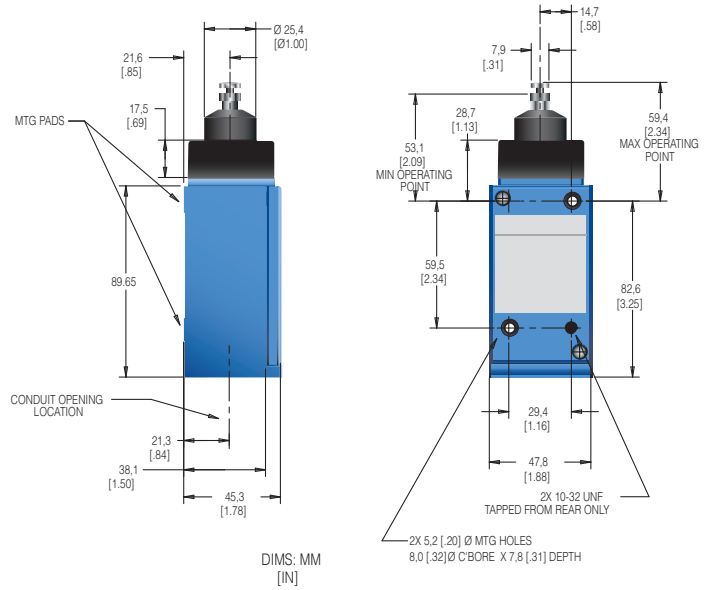

Table 10. Side Plungers • MICRO SWITCH HDLS Series Order Guide/Recommended Listings

Heads may be positioned to accept actuation from any of four directions, 90° apart.

	Plain (LSE)	Roller (LSF)	Adjustable (LSW)	Maintained (LSG)
Description	Side plain plunger (momentary)	Side roller plunger (momentary)	Adjustable side plain plunger (momentary)	Side plain plunger with maintained contact
Contact closed ■ Contact open □	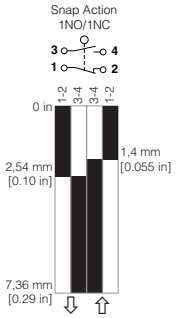	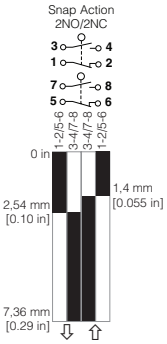	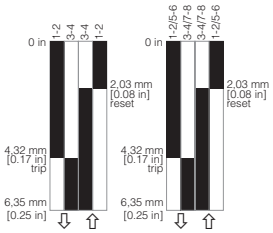	
Pretravel	2,54 mm [0.10 in]			4,32 mm [0.17 in]
Different. travel	Single pole: 0,64 mm [0.025 in] Double pole: 0,89 mm [0.035 in]			2,29 mm [0.09 in]
Overtravel	4,83 mm [0.19 in]			2,0 mm [0.08 in]
Operating point (nominal)	33,0 mm [1.30 in]	44,1 mm [1.74 in]	41,0 mm to 47,4 mm [1.62 in to 1.87 in]	67,6 mm [1.48 in]
Operating force	26,7 N [6 lb] max.			44,5 N [10 lb] max.
Op. temp range[3]	-12°C to 93°C [10°F to 200°F] (for low temp, high temp, or preleaded versions, see pages 8-9)			-1°C to 93°C [30°F to 200°F] (for low temp, high temp, or preleaded versions, see pages 8-9)

Circuitry		Contacts	Body Style[2]	Conduit (NPT)	Options				
SPDT	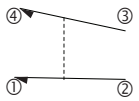	Silver	Plug-in	0.5 in		**LSE1A**	**LSF1A**	**LSW1A**	**LSG1A**
		Gold[4]	Plug-in	0.5 in		**LSE1E**	**LSF1E**	**LSW1E**	**LSG1E**
		Silver	Plug-in	0.5 in	120 V Ind. lite[1]	**LSE5A**	**LSF5A**	**LSW5A**	**LSG5A**
		Silver	Plug-in	0.5 in	240 V Ind. lite[1]	**LSE8A**	**LSF8A**	**LSW8A**	**LSG8A**
		Silver	Non-plug-in	0.5 in		**LSE3K**	**LSF3K**	**LSW3K**	**LSG3K**
DPDT	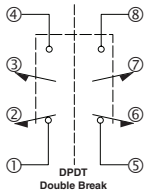	Silver	Plug-in	0.75 in		**LSE2B**	**LSF2B**	**LSW2B**	**LSG2B**
		Silver	Plug-in	0.5 in		**LSE2R**	**LSF2R**	**LSW2R**	**LSG2R**
		Silver	Plug-in	0.75 in	120 V Ind. lite[1]	**LSE6B**	**LSF6B**	**LSW6B**	**LSG6B**
		Gold[4]	Plug-in	0.5 in		**LSE6S**	**–**	**–**	**–**
		Silver	Non-plug-in	0.75 in		**LSE4L**	**LSF4L**	**LSW4L**	**LSG4L**
		Silver	Non-plug-in	0.5 in		**LSE7L**	**LSF7L**	**LSW7L**	**LSG7L**

[1] Use at voltage indicated for light. Wired to NO circuit. Upper temperature limit for lighted units is 93°C [200°F]
[2] Plug-in listings include base receptacle
[3] Completely fluorocarbon sealed switches are preferred for use in temperatures above 93°C [200°F]
[4] Gold-plated contacts

NOTE: Same polarity each pole.

To order a fluorocarbon sealed switch, insert the letters **Y** and **C** into the catalog listing as follows. The LSA1A limit switch is changed to a LS**Y**A**C**1A limit switch.
To order a low temperature, fluorosilicone sealed switch, insert the letters **Y** and **B** into the catalog listing as follows. The LSA1A limit switch is changed to a LS**Y**A**B**1A limit switch.

Figure 16. MICRO SWITCH HDLS LSE Series side plain plunger (single pole) dimensions

SPDT Plug-in (mm[in])

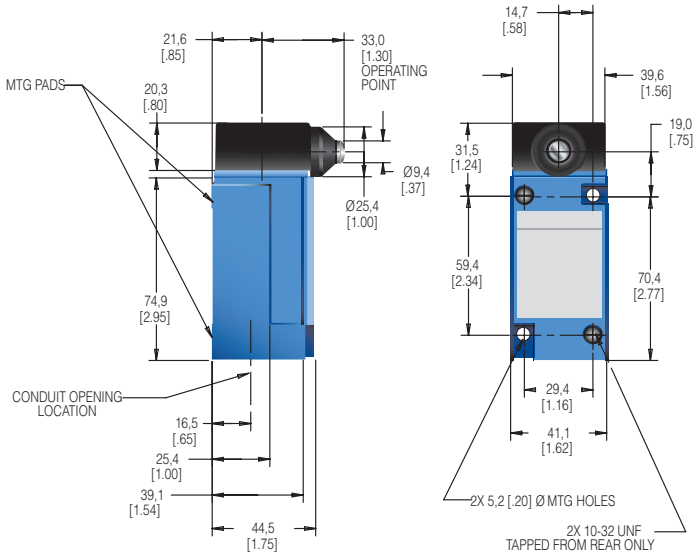

Figure 17. MICRO SWITCH HDLS LSE Series side plain plunger (double pole) dimensions

DPDT Plug-in (mm[in])

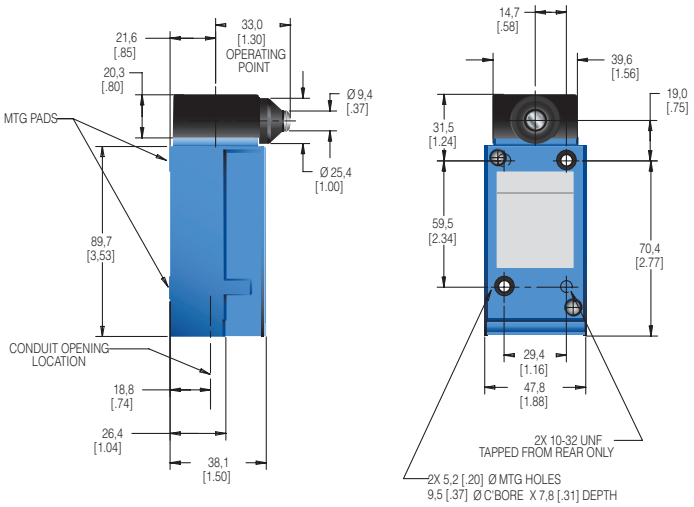

SPDT Non-plug-in (mm[in])

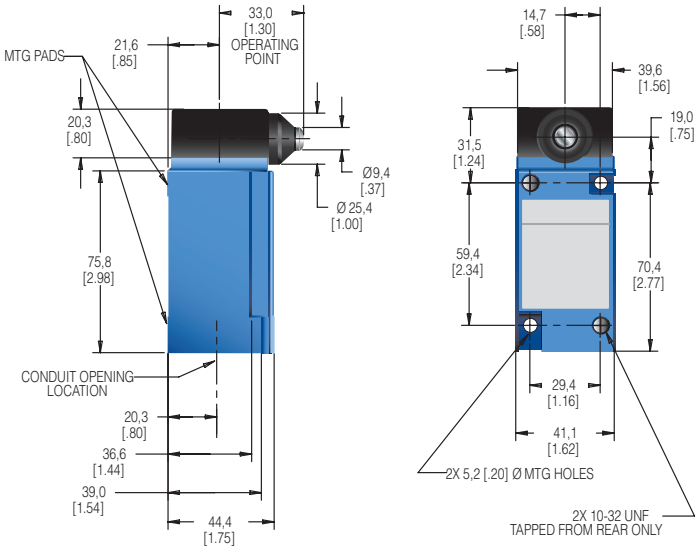

DPDT Non-plug-in (mm[in])

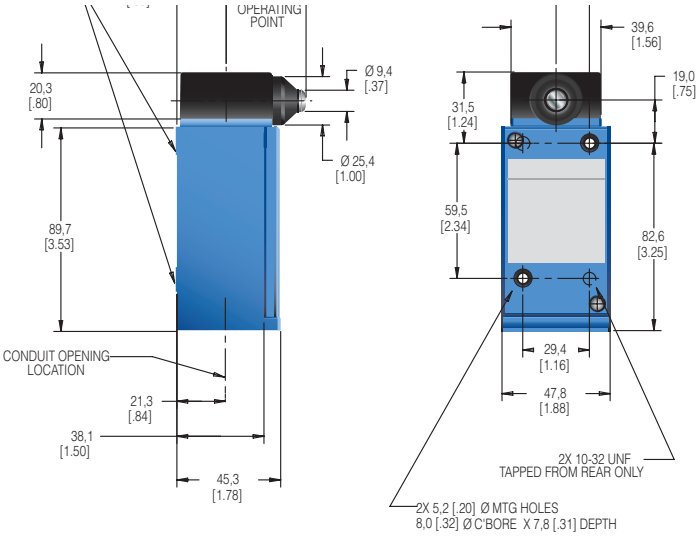

Figure 18. MICRO SWITCH HDLS LSF Series side roller plunger (single pole) dimensions

SPDT Plug-in (mm[in])

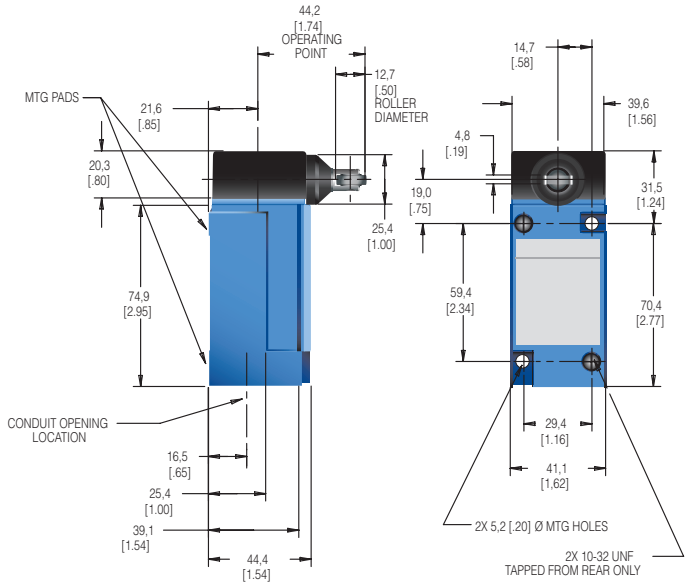

Figure 19. MICRO SWITCH HDLS LSF Series side roller plunger (double pole) dimensions

DPDT Plug-in (mm[in])

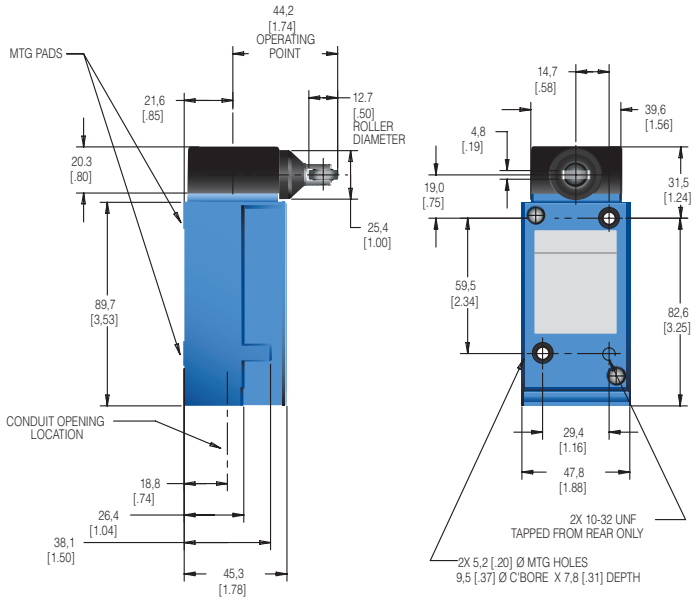

SPDT Non-plug-in (mm[in])

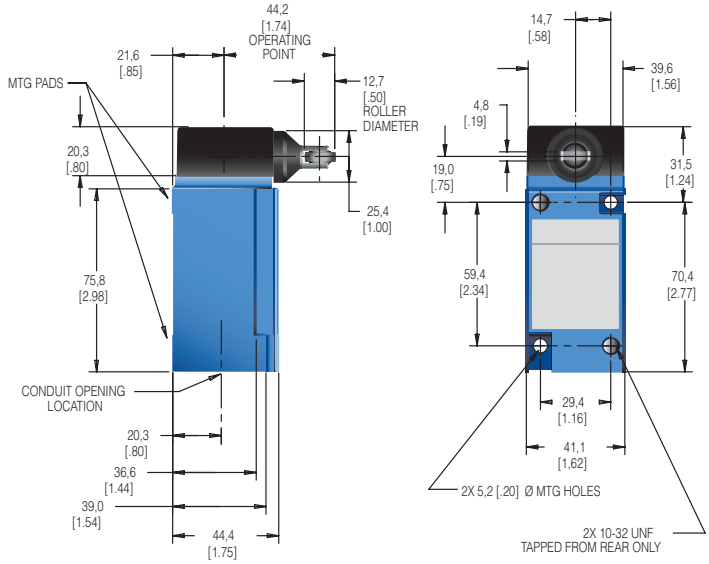

DPDT Non-plug-in (mm[in])

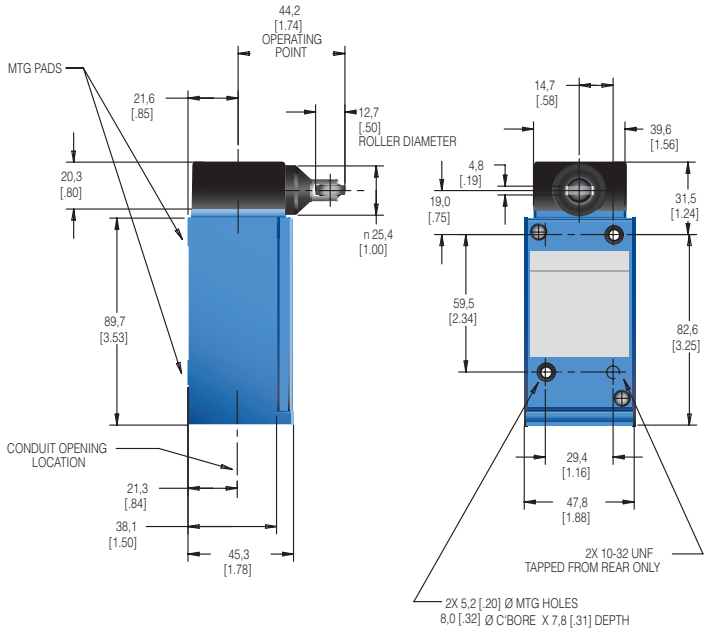

Figure 20. MICRO SWITCH HDLS LSW Series side adjustable plunger (single pole) dimensions

Figure 21. MICRO SWITCH HDLS LSW Series side adjustable plunger (double pole) dimensions

SPDT Plug-in (mm[in])

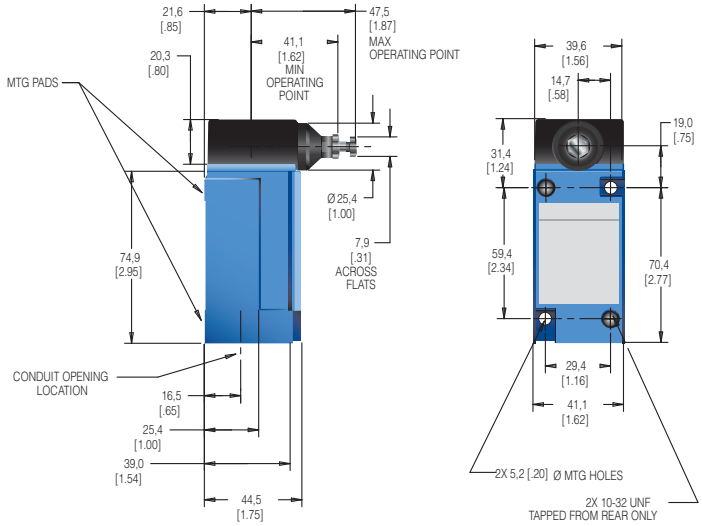

DPDT Plug-in (mm[in])

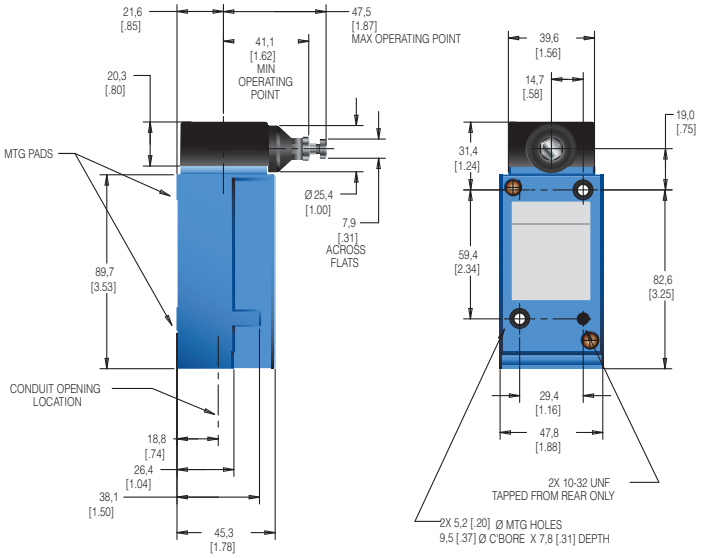

SPDT Non-plug-in (mm[in])

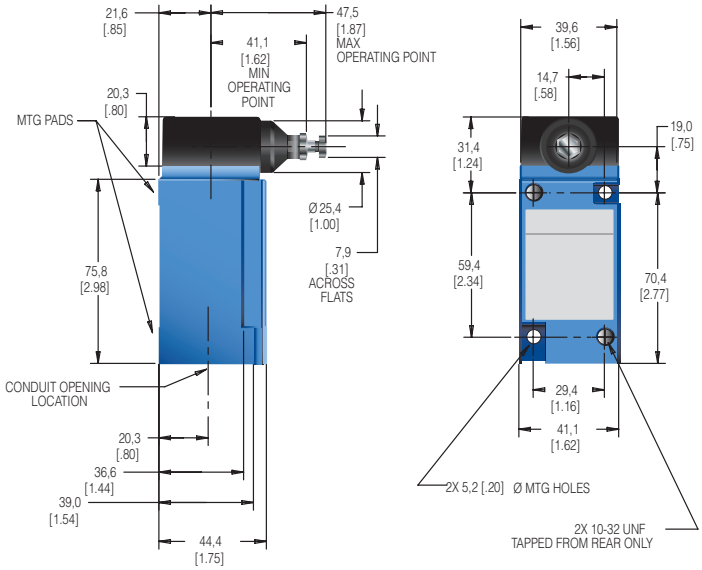

DPDT Non-plug-in (mm[in])

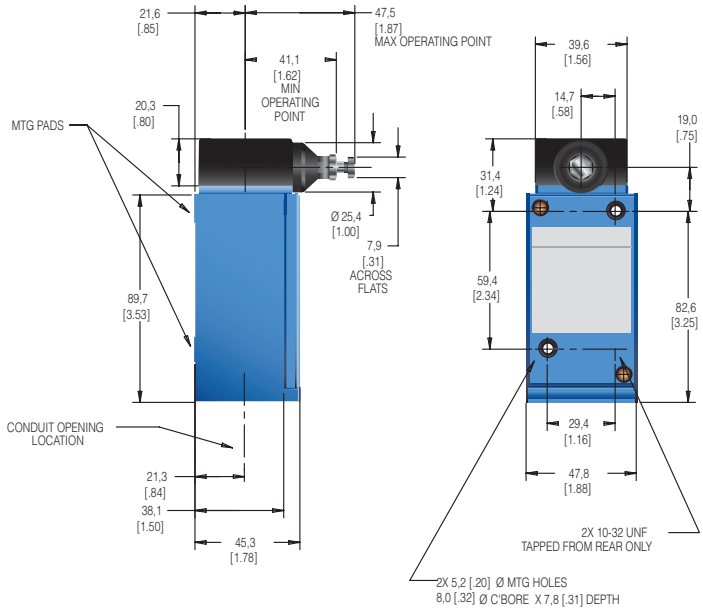

Figure 22. MICRO SWITCH HDLS LSG Series maintained contact side plunger (single pole) dimensions

Figure 23. MICRO SWITCH HDLS LSG Series maintained contact side plunger (double pole) dimensions

SPDT Plug-in (mm[in])

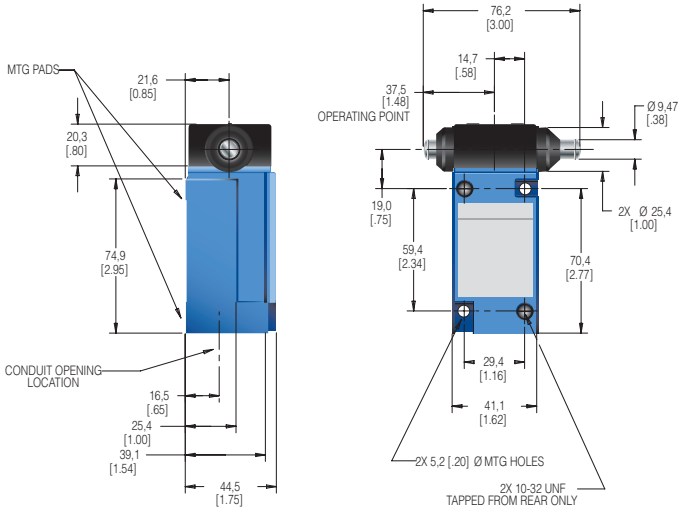

DPDT Plug-in (mm[in])

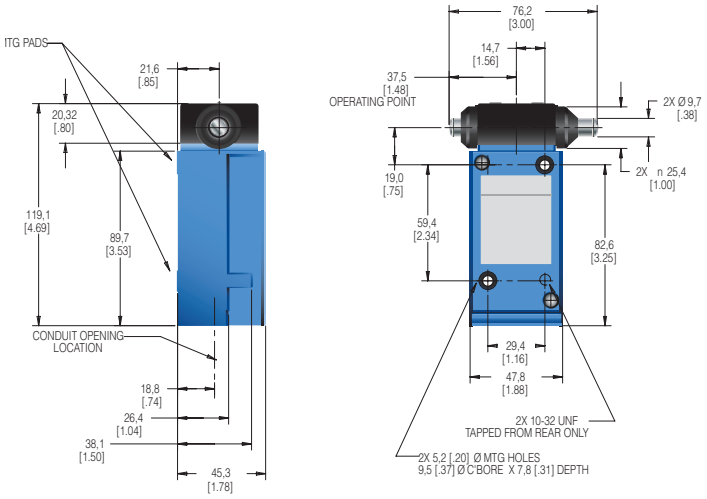

SPDT Non-plug-in (mm[in])

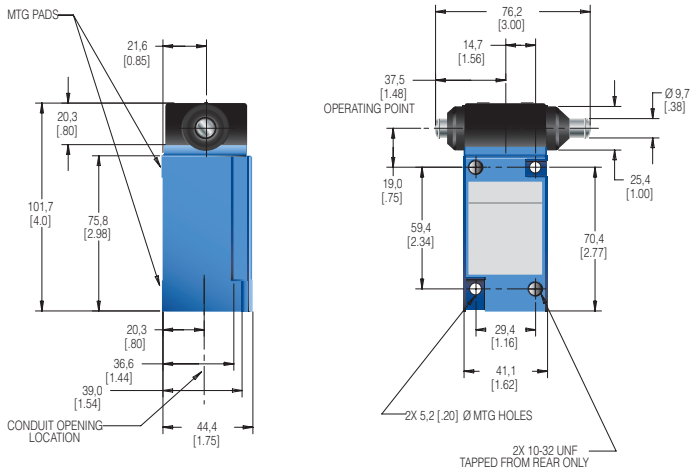

DPDT Non-plug-in (mm[in])

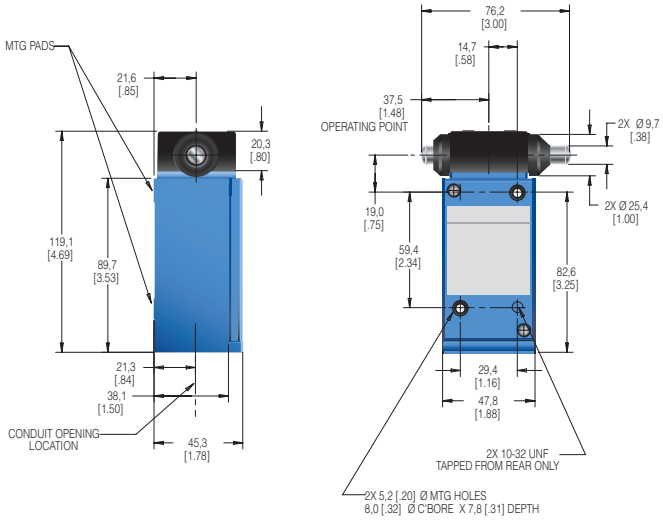

MICRO SWITCH Heavy-Duty Limit Switch, HDLS Series

Table 11. Wobbles • MICRO SWITCH HDLS Series Order Guide/Recommended Listings

LSJ1A-7A - Plastic rod | LSJ1A-7M - Spring wire | LSJ1A-7N - Flexible actuator | LSK1A-8A - Cat whisker | LSK1A-8C - Coil spring

	LSJ Series 7A Actuator	LSJ Series 7N Actuator	LSJ Series 7M Actuator	LSK Series 8A-8C Actuator	
Description	Plastic rod lever (wobble stick)	Flexible cable lever	Spring wire lever - may be formed for special needs	Cat whisker actuator for low operating force applications	
Contact closed ■ Contact open □	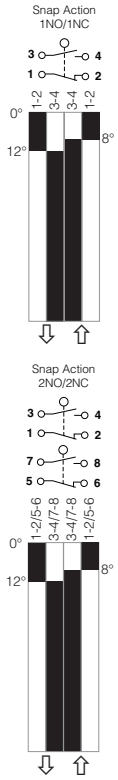	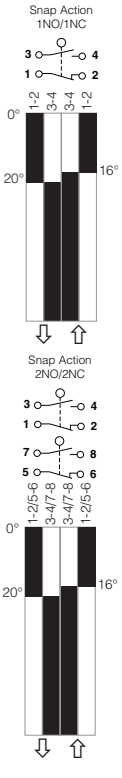	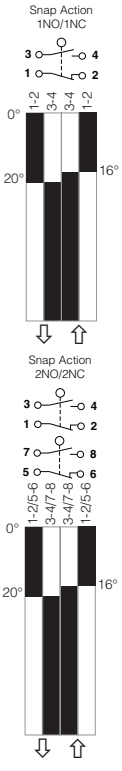	**-8A**** 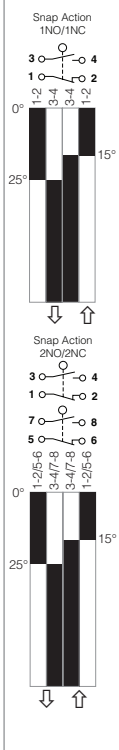	**-8C** 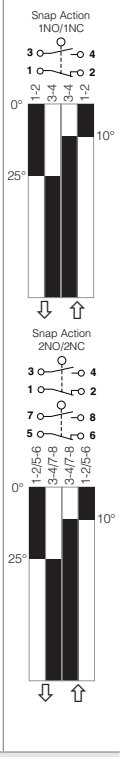
Lever length from top mounting hole	Actuator: 140 mm [5.5 in]	Actuator: 140 mm [5.5 in]	Actuator: 330 mm [13 in]	8A act.: 140 mm [5.5 in] SST 8C act.: 140 mm [5.5 in] steel plated	
Pretravel	25,4 mm [1.0 in]	38,0 mm [1.5 in]	102 mm [4.0 in]	51,0 mm [2.0 in]	
Oper. force	2,78 Nm [10 oz]	1,95 Nm [7 oz]	1,39 Nm [5 oz]	8A: 1,39 Nm [5 oz]; 8C: 1,95 Nm [7 oz]	
Op. temp range[3]	-12°C to 93°C [10°F to 200°F] (for low temp, high temp, or preleaded versions, see pages 8-9)				

Circuitry		Contacts	Body Style[2]	Conduit (NPT)	Options					
SPDT	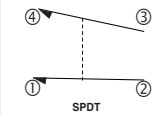 SPDT Double Break	Silver	Plug-in	0.5 in		**LSJ1A-7A**	**LSJ1A-7N**	**LSJ1A-7M**	**LSK1A-8A**	**LSK1A-8C**
		Gold[4]	Plug-in	0.5 in		**LSJ1E-7A**	**–**	**LSJ1E-7M**	**LSK1E-8A**	**LSK1E-8C**
		Silver	Plug-in	0.5 in	120 V Ind. lite[1]	**LSJ5A-7A**	**LSJ5A-7N**	**LSJ5A-7M**	**LSK5A-8A**	**LSK5A-8C**
		Silver	Plug-in	0.5 in	240 V Ind. lite[1]	**LSJ8A-7A**	**LSJ8A-7N**	**LSJ8A-7M**	**LSK8A-8A**	**LSK8A-8C**
		Silver	Non-plug-in	0.5 in		**LSJ3K-7A**	**LSJ3K-7N**	**LSJ3K-7M**	**LSK3K-8A**	**LSK3K-8C**
DPDT	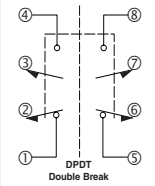 DPDT Double Break	Silver	Plug-in	0.75 in		**LSJ2B-7A**	**LSJ2B-7N**	**LSJ2B-7M**	**LSK2B-8A**	**LSK2B-8C**
		Silver	Plug-in	0.5 in		**LSJ6B-7A**	**LSJ6B-7N**	**LSJ6B-7M**	**LSK6B-8A**	**LSK6B-8C**
		Silver	Plug-in	0.75 in	120 V Ind. lite[1]	**LSJ2R-7A**	**LSJ2R-7N**	**LSJ2R-7M**	**LSK2R-8A**	**LSK2R-8C**
		Silver	Non-plug-in	0.75 in		**LSJ4L-7A**	**LSJ4L-7N**	**LSJ4L-7M**	**LSK4L-8A**	**LSK4L-8C**
		Silver	Non-plug-in	0.5 in		**LSJ7L-7A**	**LSJ7L-7N**	**LSJ7L-7M**	**LSK7L-8A**	**LSK7L-8C**

[1] Use at voltage indicated for light. Wired to NO circuit. Upper temperature limit for lighted units is 93°C [200°F]; [2] Plug-in listings include base receptacle
[3] Completely fluorocarbon sealed switches are preferred for use in temperatures above 93°C [200°F]; [4] Gold-plated contacts
** These cat whiskers have a 140 mm [5.5 in] long actuator. To specify a 190 mm [7.5 in] length actuator, substitute -**8B** for -**8A**.

NOTE: Same polarity each pole.

To order a fluorocarbon sealed switch, insert the letters **Y** and **C** into the catalog listing as follows. The LSA1A limit switch is changed to a LS**Y**A**C**1A limit switch.
To order a low temperature, fluorosilicone sealed switch, insert the letters **Y** and **B** into the catalog listing as follows. The LSA1A limit switch is changed to a LS**Y**A**B**1A limit switch.

Figure 24. MICRO SWITCH HDLS LSJ_ _-7A Series wobble (single pole) dimensions

SPDT Plug-in (mm[in])

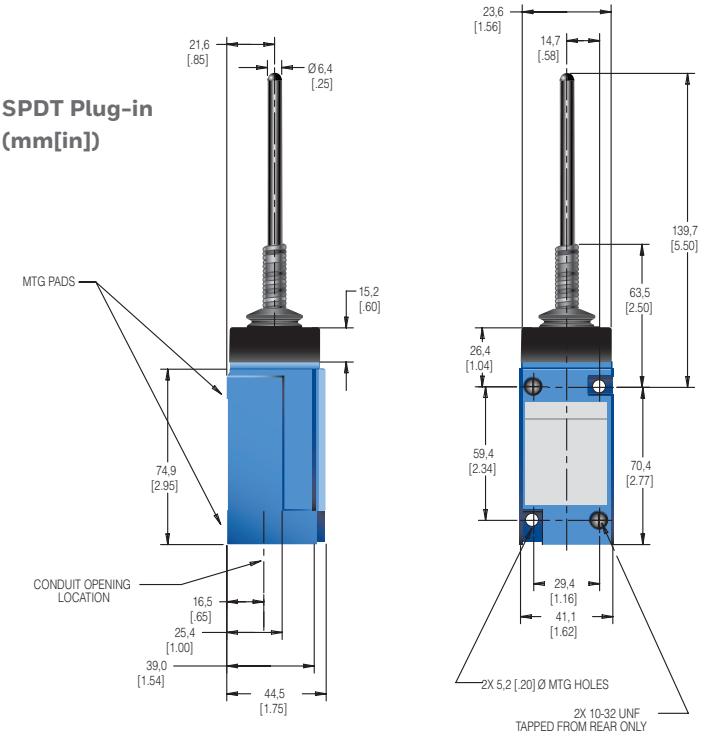

Figure 25. MICRO SWITCH HDLS LSJ_ _-7A Series wobble (double pole) dimensions

DPDT Plug-in (mm[in])

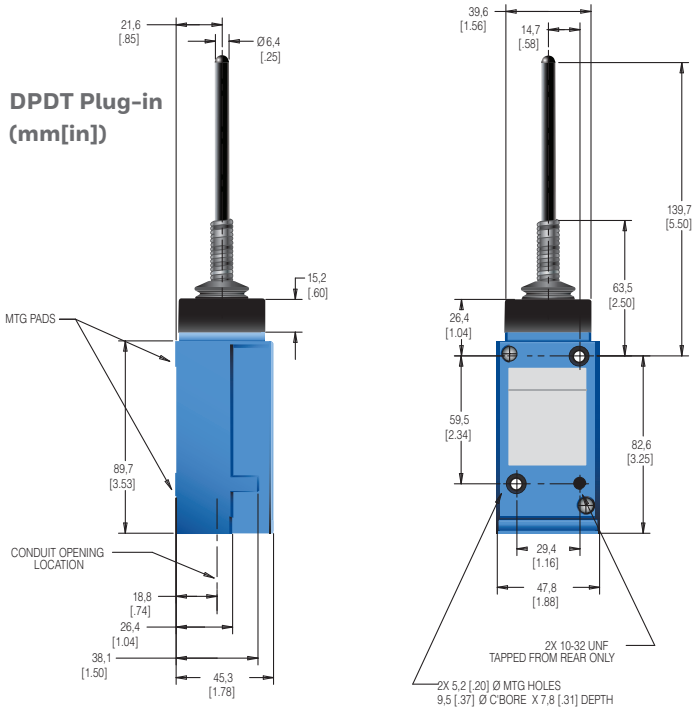

SPDT Non-plug-in (mm[in])

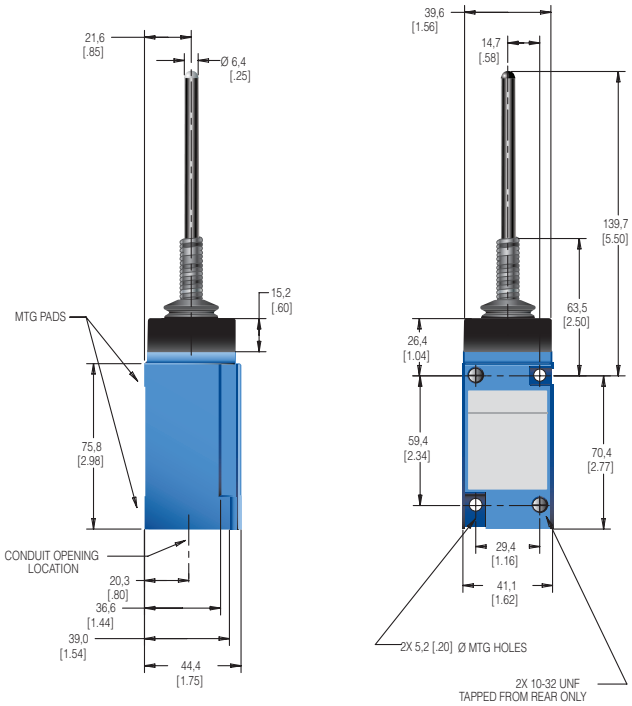

DPDT Non-plug-in (mm[in])

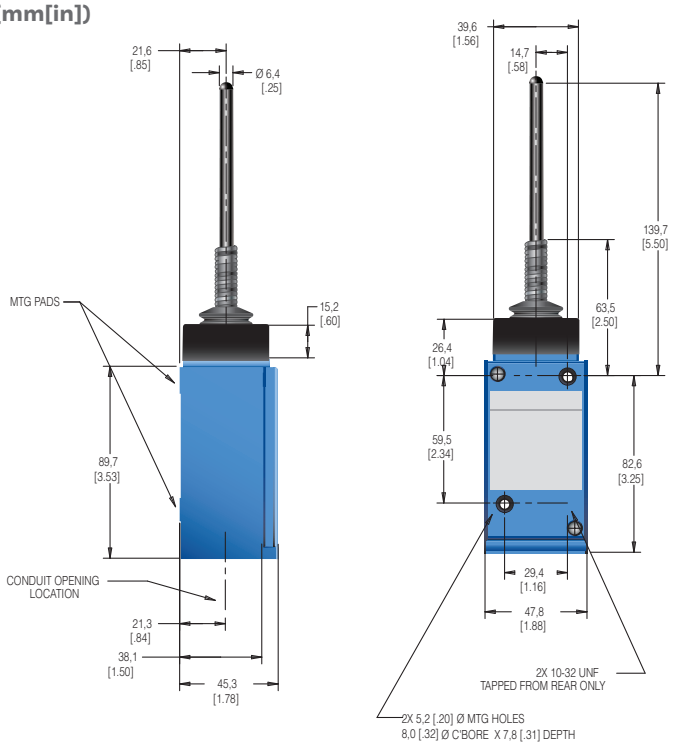

Figure 26. MICRO SWITCH HDLS LSJ_ _-7N Series wobble (single pole) dimensions

SPDT Plug-in (mm[in])

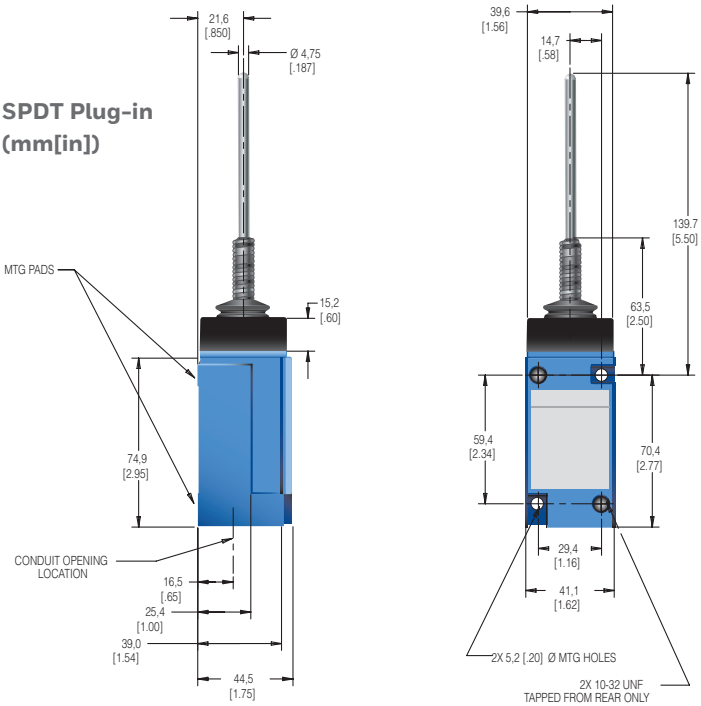

Figure 27. MICRO SWITCH HDLS LSJ_ _-7N Series wobble (double pole) dimensions

DPDT Plug-in (mm[in])

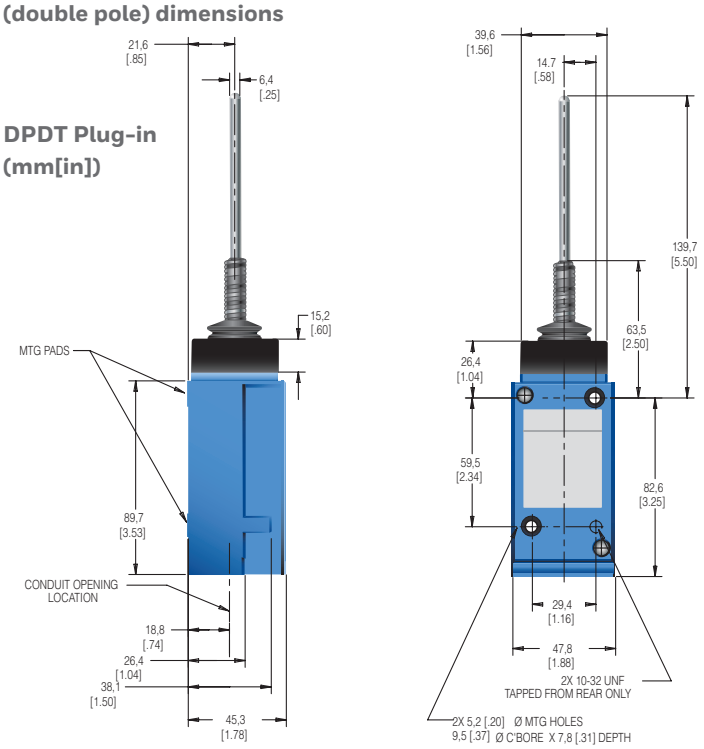

SPDT Non-plug-in (mm[in])

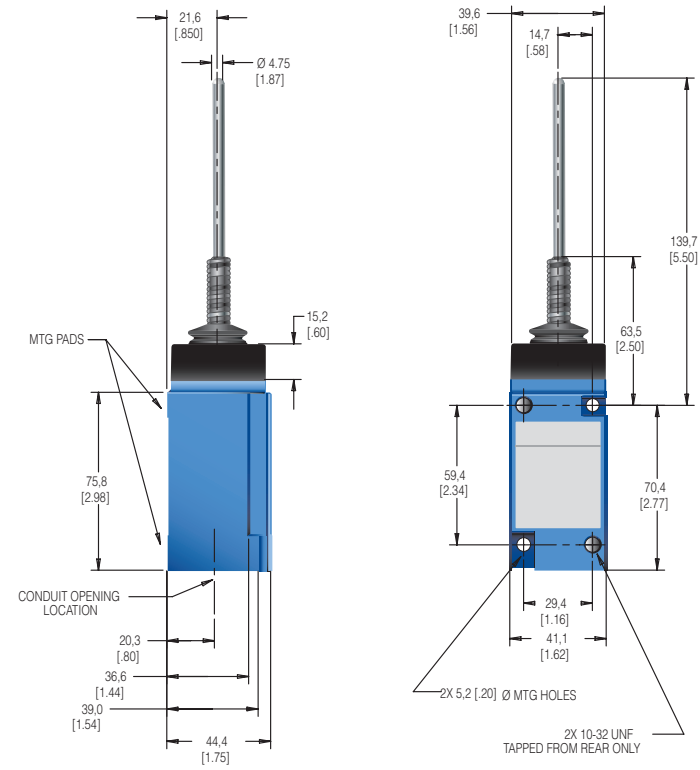

DPDT Non-plug-in (mm[in])

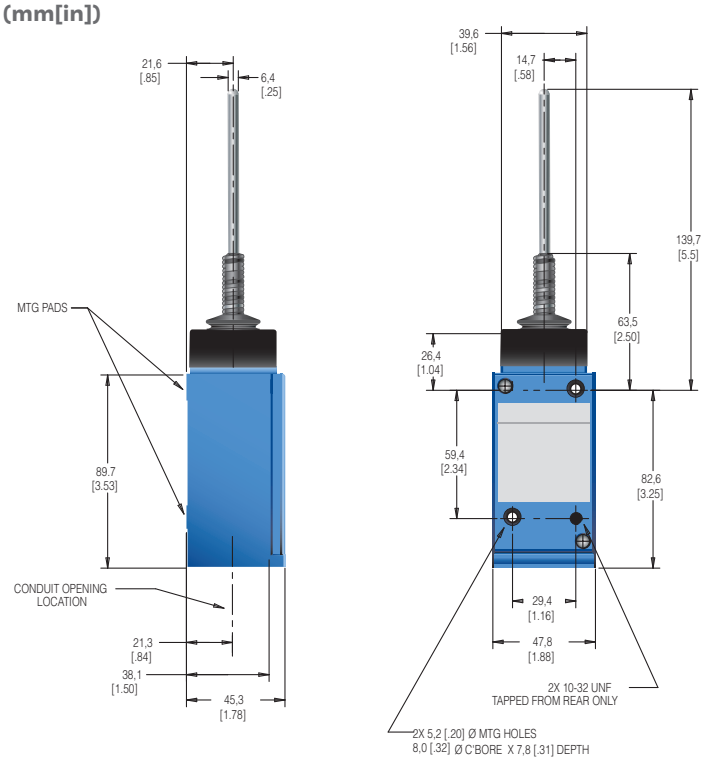

Figure 28. MICRO SWITCH HDLS LSJ_ _-7M Series wobble (single pole) dimensions

SPDT Plug-in (mm[in])

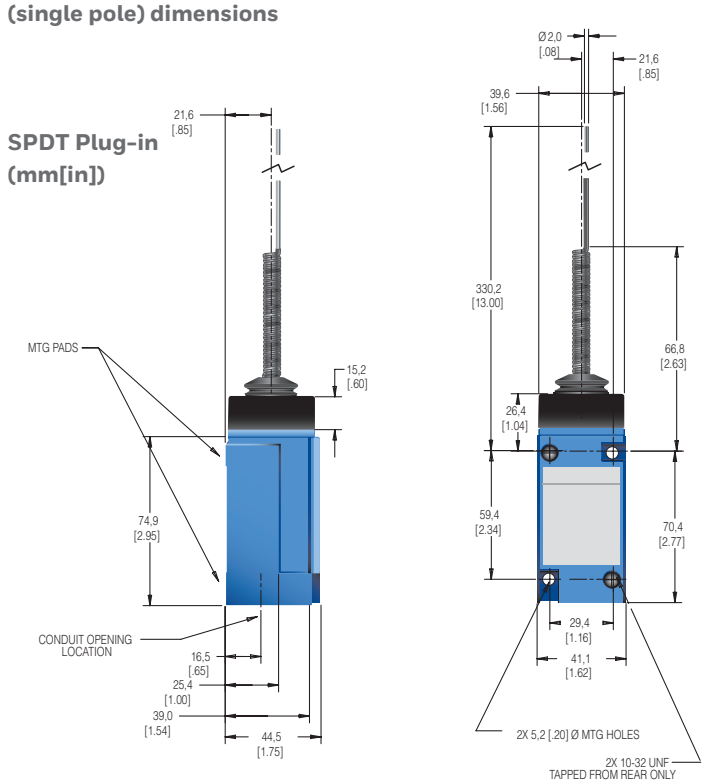

Figure 29. MICRO SWITCH HDLS LSJ_ _-7M Series wobble (double pole) dimensions

DPDT Plug-in (mm[in])

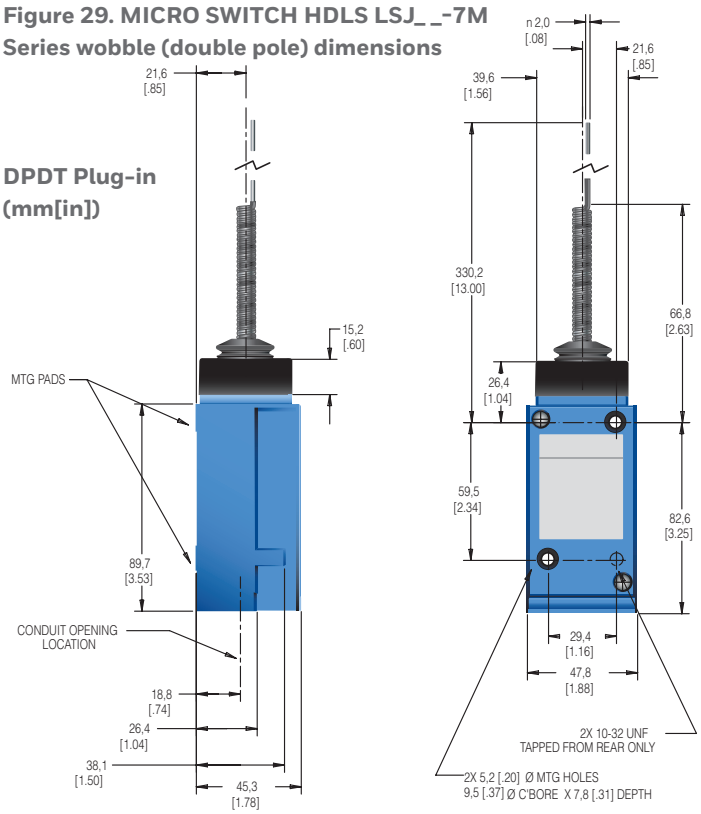

SPDT Non-plug-in (mm[in])

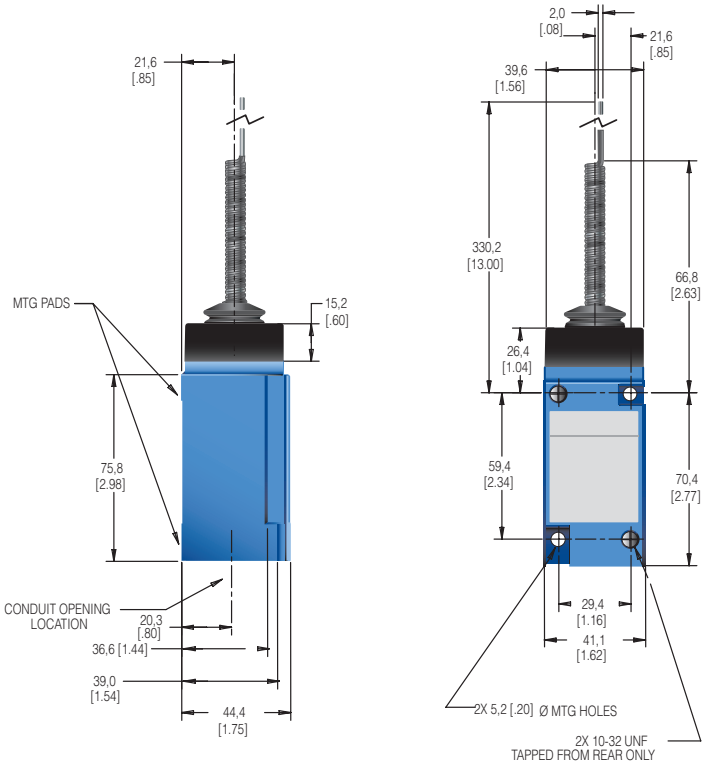

DPDT Non-plug-in (mm[in])

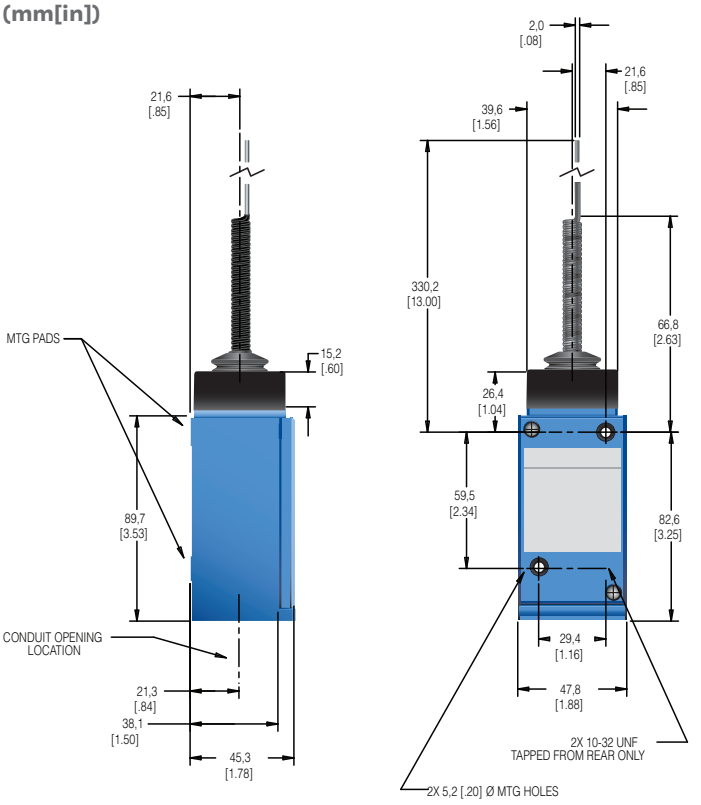

Figure 30. MICRO SWITCH HDLS LSK_ _-8A Series wobble (single pole) dimensions

SPDT Plug-in (mm[in])

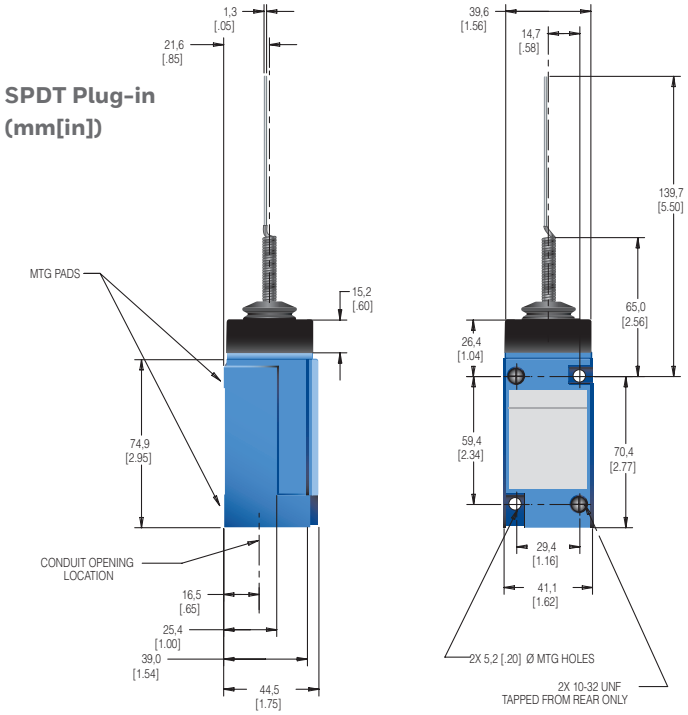

Figure 31. MICRO SWITCH HDLS LSK_ _-8A Series wobble (double pole) dimensions

DPDT Plug-in (mm[in])

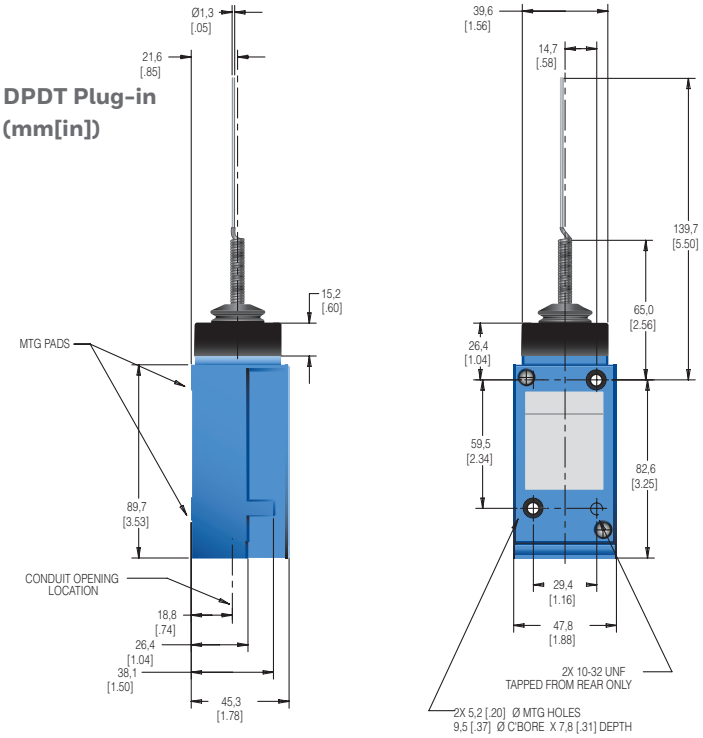

SPDT Non-plug-in (mm[in])

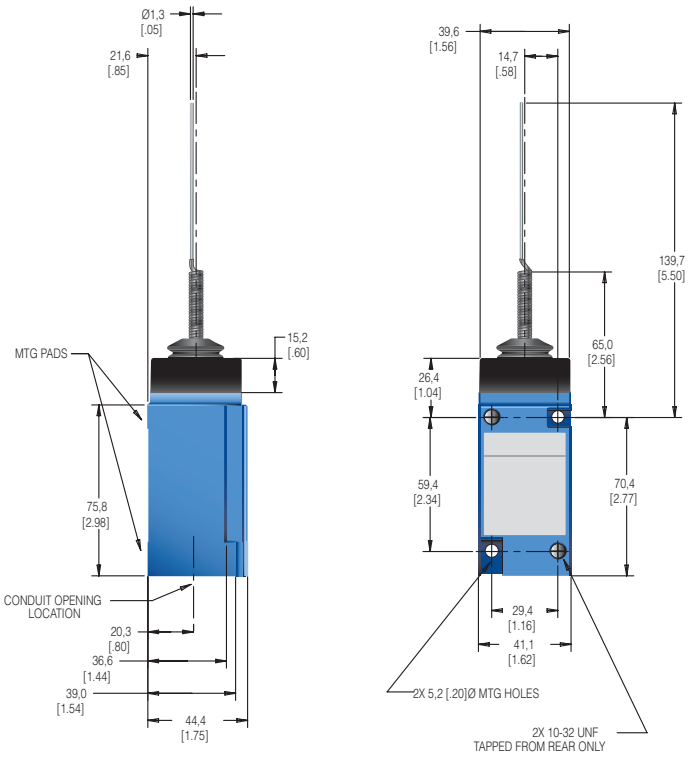

DPDT Non-plug-in (mm[in])

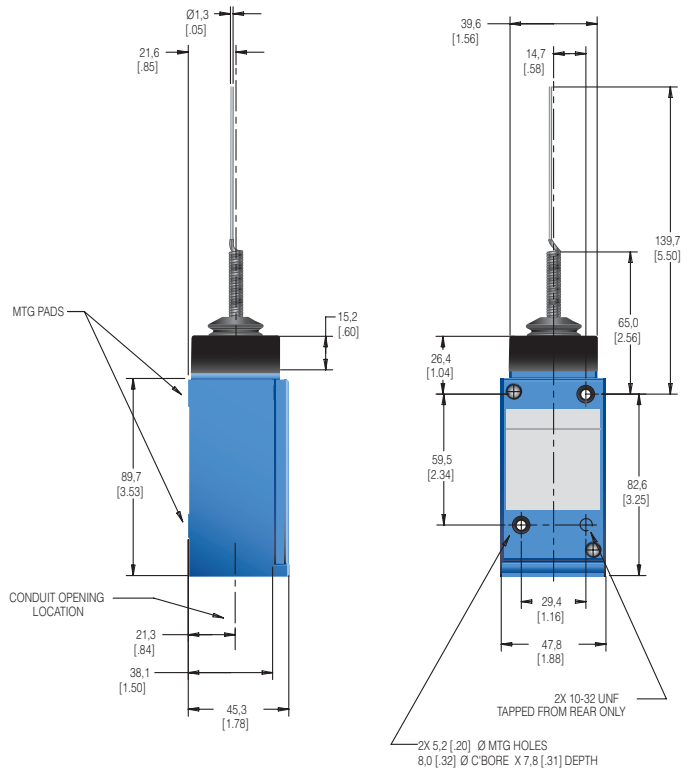

Figure 32. MICRO SWITCH HDLS LSK_ _-8C Series wobble (single pole) dimensions

SPDT Plug-in (mm[in])

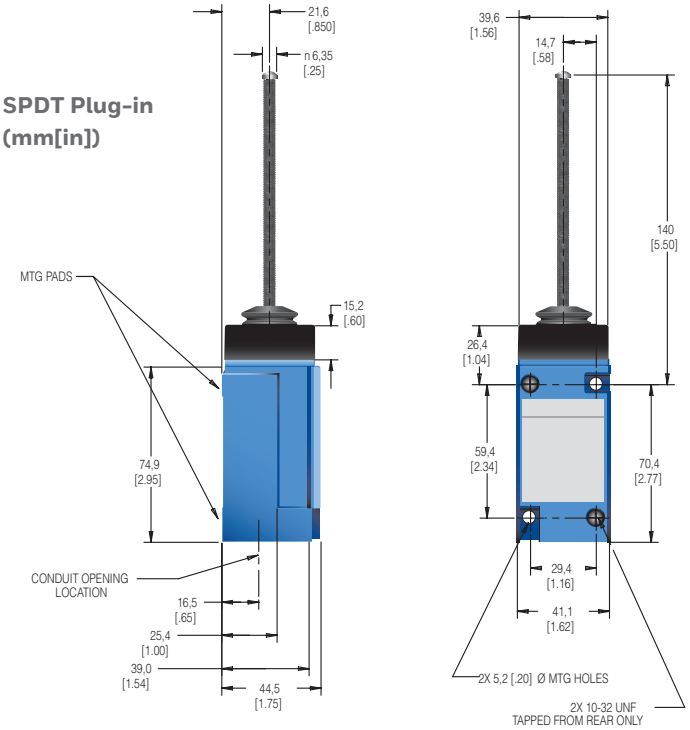

Figure 33. MICRO SWITCH HDLS LSK_ _-8C Series wobble (double pole) dimensions

DPDT Plug-in (mm[in])

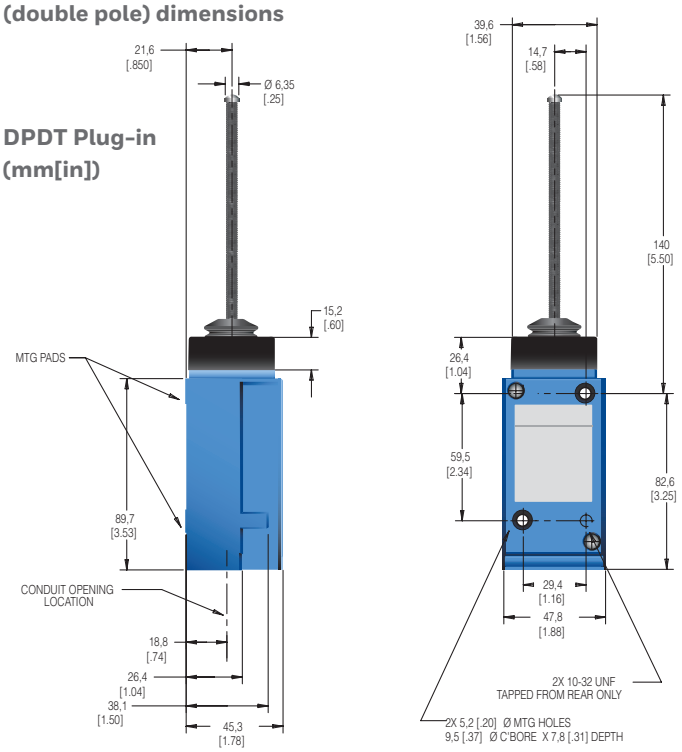

SPDT Non-plug-in (mm[in])

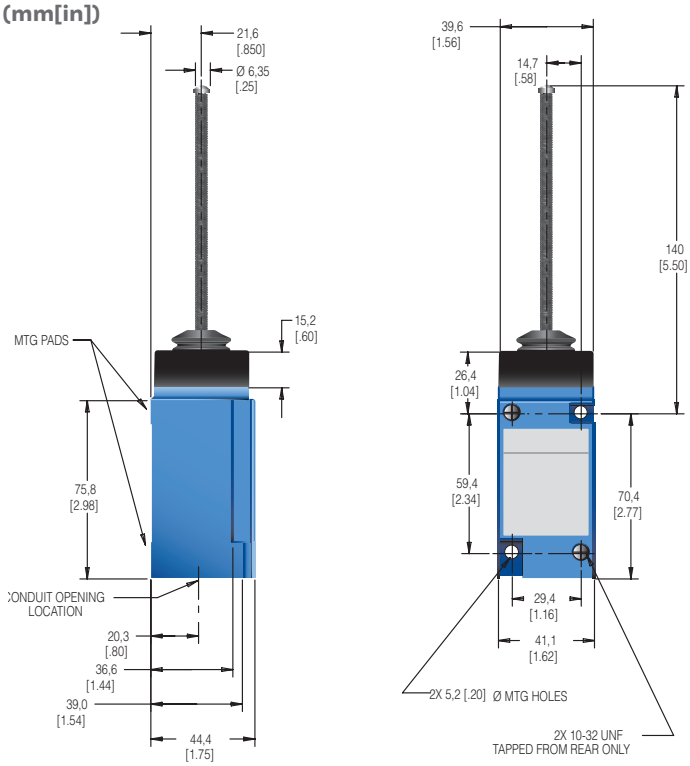

DPDT Non-plug-in (mm[in])

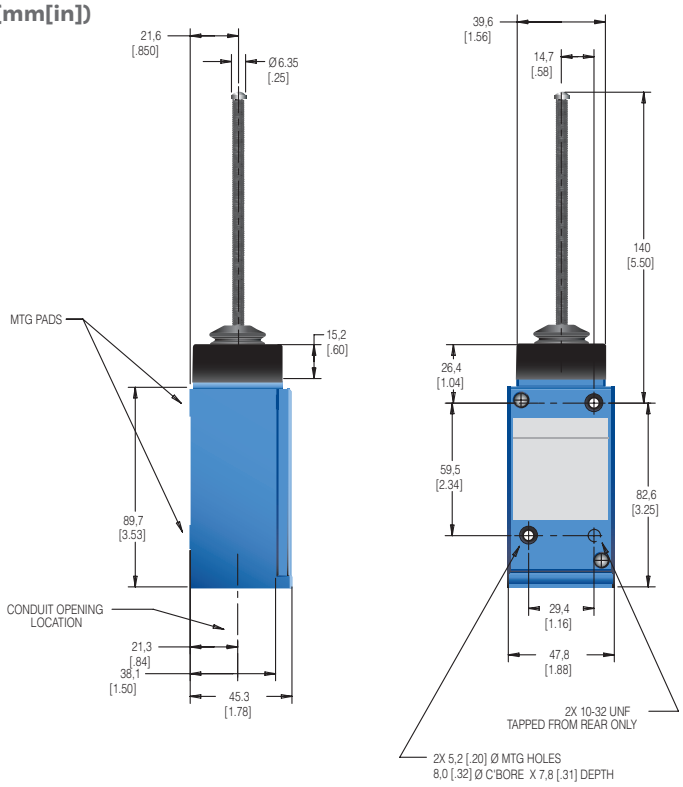

MICRO SWITCH Heavy-Duty Limit Switch, HDLS Series

SPECIAL APPLICATIONS

High Capacity Limit Switch

Features

- High dc current ratings
- 20 A rating at 120 Vac (single pole)
- Plug-in or non-plug in
- Positive retention lever arm
- High resistance to seismic shock

This series has a wide gap contact block that handles a higher make/break dc load. In addition, a special lever arm has a serrated shaft hole and a cap screw with locking nut for attaching the lever to the rotary shaft. This assures a firm grip on the operating shaft and positive retention of the lever adjustment.

The need for precise operation, coupled with challenging environmental conditions places rigid demands on any control. Honeywell's products are intended to satisfy these demands with its high capacity HDLS, designed to perform reliably under these conditions.

Listings

LSQ051	Double pole, non-plug-in, 0.75 in conduit	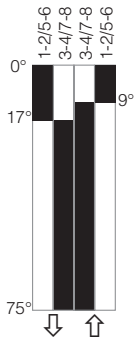
LSQ052	Double pole, plug-in, 0.75 in conduit	
LSQ053	Single pole, non-plug-in, 0.5 in conduit	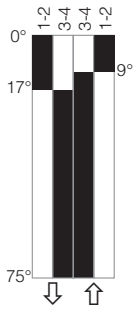
LSQ054	Single pole, plug-in, 0.5 in conduit	
LSZ616	Replacement lever for above listings	
Pretravel	17° max.	
Diff. travel	8° max.	
Overtravel	58° min.	
Oper. torque	0,45 Nm [4 in-lb] max.	
Action	CW and CCW (spring return)	

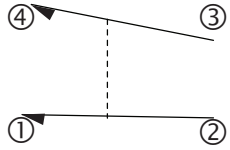

SPDT
Double Break

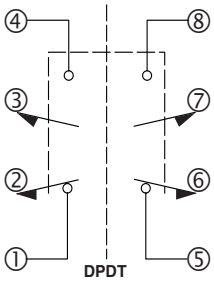

DPDT
Double Break

	Single Pole		Double Pole	
Voltage	**Resistive Load**	**Inductive Load**	**Resistive Load**	**Inductive Load**
125 Vdc	2.0 A	1.0 A	1.0 A	0.4 A
250 Vdc	0.7 A	0.4 A	0.4 A	0.2 A
120 Vac	20 A	20 A	10 A	10 A
240 Vac	15 A	15 A	7.5 A	7.5 A
480 Vac	10 A	10 A	5 A	5 A
600 Vac	5 A	5 A	2.5 A	2.5 A

Maximum operating rate - 15 operations per minute.

NOTE: Same polarity each pole.

SPECIAL APPLICATIONS

Gravity Return Side Rotary Switches (LSS)

LSS1H gravity-return, side-rotary switches have no return spring mechanism. The weight of the actuating lever must provide the force to restore it to the free position. The 5 in-oz. max. operating torque is useful in conveyor applications since it enables operation by small or lightweight objects. Because the head is unsealed, the **LSS1H** is classified as NEMA 1. However, the switch cavity is sealed to protect the switch contacts.

	LSS1H
Description	Gravity-return side rotary
Circuitry	SPDT, double break
Contacts	Silver
Sealing	NEMA 1
Electrical rating	(B) NEMA B600
Body style	Plug-in
Conduit (NPT)	0.5 in
Differential travel	12° max.
Total travel (no stop)*	360°
Operating torque	0,035 Nm [5 in-oz] max.

* Switch has approximately 180° dwell of the normally closed and normally open switch contacts

NOTE: Same polarity each pole.

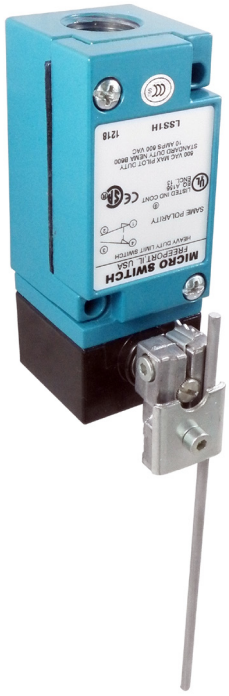

Extra Low Torque Side Rotary Switches (LST)

LST1H extra-low torque, side-rotary switches have a low force return spring and a maximim operation torque of 12 in-oz. It is rated as NEMA 1 due to an unsealed head. The switch cavity is sealed to protect the switch contacts.

	LST1H
Description	Extra-low torque side rotary
Circuitry	SPDT, double break
Contacts	Silver
Sealing	NEMA 1
Electrical rating	(B) NEMA B600
Body style	Plug-in
Conduit (NPT)	0.5 in
Pretravel	15° max.
Differential travel	5° max.
Overtravel	60' min.
Total travel	75° nom.
Operating torque	0,085 Nm [12 in-oz] max.

NOTE: Same polarity each pole.

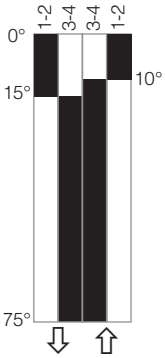

ALSO AVAILABLE

Fully potted MICRO SWITCH HDLS heavy-duty limit switches provide an extra degree of protection in harsh environments by sealing the basic switch cavity with epoxy. These switches are the same as the non-plug-in HDLS except that the entire switch cavity is filled with epoxy in addition to the conduit entrance. The fully potted HDLS switches are pre-leaded, with either cable or connectors.

- Excellent sealing capability for harsh-duty food and beverage wash downs and severe machine tool environments
- Diaphragm sealing
- 12 inch STOOW-A cable (other lengths available) or connector version
- Cable versions: NEMA 1, 6, 6P, 12
- Connector versions: NEMA 1, 6, 6P, 12, 13
- All fluorocarbon seals (low temperature fluorosilicone seals available)
- UL, CSA, CE, CCC

MICRO SWITCH HDLS switches are also available in all stainless-steel versions. Designed for use in highly corrosive environments, such as petrochemical plants, food processing plants, shipboard, and dock-side locations. The type 316 cast stainless steel body is designed to minimize crevices where food particles could become trapped in water. The actuator, operating head, and screws are also stainless steel. All seals are fluorocarbon to provide excellent chemical resistance and to withstand operating temperatures up to 121°C [250°F] and pressurized steam cleaning. Pre-leaded and epoxy-filled versions also available.

- Corrosion-resistant stainless steel non-plug in body, head, and rotary shaft
- Stainless steel levers
- Fluorocarbon seals (low temperature fluorosilicone seals available)
- NEMA 1, 3, 3R, 4, 4X, 6, 6P, and 13
- UL, CSA, CE, CCC

To learn more about Honeywell's HDLS products, call **+1-815-235-6847 or 1-800-537-6945.**