Промэлектроника
sales@prom-elec.com

Yamatake-Honeywell

7800 SERIES EC7895A, RM7895A Relay Module

PRODUCT DATA

GENERAL

The Yamatake Honeywell EC7895A and RM7895 is a microprocessor based integrated burner control for automatically fired gas, oil, or combination fuel single burner applications. The RM7895 consists of the Relay Module. Subbase, Amplifier and Purge Card. Options include Keyboard Display Module, Personal Computer Interface, DATA CONTROLBUS MODULE™, Remote Display Module, and COMBUSTION SYSTEM MANAGER™ Software.

The EC7895 and RM7895 are programmed to provide a level of safety, functional capability and features beyond the capacity of conventional controls.

Functions provided by the EC7895 and RM7895 include automatic burner sequencing, flame supervision, system status indication, system or self-diagnostics and troubleshooting.

FEATURES

- **Safety features:**
  - **Airflow switch check.**
  - **Closed loop logic test.**
  - **Dynamic AMPLI-CHECK®.**
  - **Dynamic input check.**
  - **Dynamic safety relay test.**
  - **Dynamic self-check logic.**
  - **Internal hardware status monitoring.**
  - **Tamper resistant timing and logic.**
- **Access for external electrical voltage checks.**
- **Application flexibility.**
- **Communication interface capability.**
- **Dependable, long-term operation provided by microcomputer technology.**
- **First-out annunciation and system diagnostics provided by a 2 row by 20 column Vacuum Fluorescent Display (VFD) located on the optional Keyboard Display Module.**
- **Five (LEDs) for sequence information.**
- **Interchangeable plug-in flame amplifiers.**
- **Local or remote annunciation of EC7895 and RM7895 operation and fault information.**
- **Nonvolatile memory; EC7895 and RM7895 retain history files and sequencing status after loss of power.**
- **Remote reset (optional).**
- **Report generation (optional).**
- **Selectable recycle or lockout on loss of airflow.**
- **Selectable recycle or lockout on loss of flame.**
- **Shutter drive output.**
- **Burner controller data (optional):**
  - **Flame signal strength.**
  - **Hold status.**
  - **Lockout/alarm status.**
  - **Sequence status.**
  - **Sequence time.**
  - **Total cycles of operation.**
  - **Total hours of operation.**
  - **Fault history providing for the six most recent faults:**
    - **Cycles of operation at the time of the fault.**
    - **Fault message and code.**
    - **Hours of operation at the time of the fault.**
    - **Sequence status at the time of the fault.**
    - **Sequence time at the time of the fault.**
  - **Diagnostic information:**
    - **Device type.**
    - **Flame amplifier type.**
    - **Flame failure response time.**
    - **Manufacturing code.**
    - **On/Off status of all digital inputs and outputs.**
    - **Selected prepurge time.**
    - **Software revision and version of EC7895 and RM7895 and optional Keyboard Display Module.**
    - **Status of configuration jumpers.**

Contents

General 1
Features 1
Specifications 2
Ordering Information 2
Principal Technical Features 8
Safety Provisions 8
Installation 9
Wiring 11
Assembly 14
Operation 17
Checkout 20
Troubleshooting 26

Copyright © 1996 Honeywell Inc. • All Rights Reserved

65-0205

ПРОМЭЛЕКТРОНИКА / sales@prom-elec.com

SPECIFICATIONS

Model:
RM7895A

Electrical Ratings, see Table 1A:
Voltage and Frequency: 100 Vac (+10/-15%), 50 or 60 Hz (+/- 10%). [1]
Power Dissipation: RM7895: 10W maximum.
Maximum Total Connected Load: 2000 VA.
Fusing Total Connected Load: 20A maximum, type FRN or equivalent.

Table 1A. RM7895A Terminal Ratings.

Terminal No.	Description	Ratings
G	Flame Sensor Ground	
Earth G	Earth Ground[2]	
L2(N)	Line Voltage Common	
3	Alarm	100 Vac, 1A pilot duty.
4	Burner Motor	100 Vac, 9.8 AFL, 58.8 ALR (inrush).
5	Line Voltage Supply (L1)	100 Vac (+10/-15%), 50 or 60 Hz (+/- 10%).[3,4]
6	Burner Controller and Limits	100 Vac, 1 mA.
7	Airflow Interlock	100 Vac, 9A.
8	Pilot Valve/Ignition	100 Vac, 4.5A ignition and 50VA pilot duty.[4]
9	Main Fuel Valve	100 Vac, 2A pilot duty.[5]
10	Ignition	100 Vac, 4.5A ignition.[4]
F(11)	Flame Sensor	60 to 220 Vac, current limited.
12	Unused	
13	Unused	
14	Unused	
15	Unused	
16	Unused	
17	Unused	
18	Unused	
19	Unused	
20	Unused	
21	Unused	
22	Shutter	100 Vac, 0.5A

[1] Range of allowable operating frequency: 45 to 66 Hz.
[2] The 7895 must have an earth ground providing a connection between the subbase and the control panel or the equipment. The earth ground wire must be capable of conducting the current to blow the 20A fuse (or breaker) in event of an internal short circuit. The 7895 needs a low impedance ground connection to the equipment frame which, in turn, needs a low impedance connection to earth ground. For a ground path to be low impedance at RF frequencies, the connection must be made with minimum length conductors that have maximum surface areas. Wide straps or brackets rather than leadwires are preferred. Be careful to verify that mechanically tightened joints along the ground path, such as pipe or conduit threads or surfaces held together with fasteners, are free of nonconductive coatings and are protected against mating surface corrosion.
[3] 2000 VA maximum connected load to 7895 Assembly.
[4] Can also be 100 Vac, 1A pilot duty.
[5] Can also be 65 VA pilot duty with motorized valve, 1150 VA inrush, 460 VA open, 250 VA hold.

ORDERING INFORMATION

When purchasing replacement and modernization products from your TRADELINE® wholesaler or distributor, refer to the TRADELINE® Catalog or price sheets for complete ordering number.

If you have additional questions, need further information, or would like to comment on our products or services, please write or phone:

1. Your local Home and Building Control Sales Office (check white pages of your phone directory).
2. Home and Building Control Customer Relations
   Honeywell, 1885 Douglas Drive North
   Minneapolis, Minnesota 55422-4386

In Canada—Honeywell Limited/Honeywell Limitée, 35 Dynamic Drive, Scarborough, Ontario M1V 4Z9.
International Sales and Service Offices in all principal cities of the world. Manufacturing in Australia, Canada, Finland, France, Germany, Japan, Mexico, Netherlands, Spain, Taiwan, United Kingdom, U.S.A.

Model:
EC7895

Electrical Ratings, see Table 1B:
Voltage and Frequency: 200 Vac (+10/-15%), 50 or 60 Hz (+/- 10%). [1]
Power Dissipation: EC7895: 10W maximum.
Maximum Total Connected Load: 2000 VA.
Fusing Total Connected Load: 20A maximum, type FRN or equivalent.

Table 1B. EC7895A Terminal Ratings.

Terminal No.	Description	Ratings
G	Flame Sensor Ground	
Earth G	Earth Ground[2]	
L2 (N)	Line Voltage Common	
3	Alarm	200 Vac, 1A pilot duty.
4	Burner Motor	200 Vac, 4A at pF = 0.5, 20A inrush[4]
5	Line Voltage Supply (L1)	200 Vac (+10/-15%), 50 or 60 Hz (+/- 10%).[3,4]
6	Burner Controller and Limits	200 Vac, 1 mA.
7	Airflow Interlock	200 Vac, 9A.
8	Pilot Valve/Ignition	200 Vac, 4A at pF = 0.5, 20A inrush[4]
9	Main Fuel Valve	200 Vac, 4A at pF = 0.5, 20A inrush[4]
10	Ignition	200 Vac, 4A at pF = 0.5, 20A inrush[4]
F(11)	Flame Sensor	60 to 220 Vac, current limited.
12	Unused	
13	Unused	
14	Unused	
15	Unused	
16	Unused	
17	Unused	
18	Unused	
19	Unused	
20	Unused	
21	Unused	
22	Shutter	200 Vac, 0.5A

[1] Range of allowable operating frequency 45 through 66 Hz.
[2] The EC7895 must have an earth ground providing a connection between the subbase and the control panel or the equipment. The earth ground wire must be capable of conducting the current to blow the 20A fuse (or breaker) in event of an internal short circuit. The RM7895 needs a low impedance ground connection to the equipment frame which, in turn, needs a low impedance connection to earth ground. For a ground path to be low impedance at RF frequencies, the connection must be made with minimum length conductors that have maximum surface areas. Wide straps or brackets rather than leadwires are preferred. Be careful to verify that mechanically tightened joints along the ground path, such as pipe or conduit threads or surfaces held together with fasteners, are free of nonconductive coatings and are protected against mating surface corrosion.
[3] 2000 VA maximum connected load to EC7895 Assembly.
[4] Total load current excluding burner/boiler motor and firing rate outputs cannot exceed 5A, 25A inrush.

Environmental Ratings:
Ambient Temperature:
Operating: -40° F to 140° F.
Storage: -60° F to 150° F.
Humidity: 85% RH continuous, noncondensing.
Vibration: 0.5G environment.

Dimensions:
Refer to Fig. 1 and 2.

Weight:
RM7895 with Dust Cover: 1 pound 15 ounces, unpacked.

IMPORTANT
Flame Detection System available for use with EC7895 and RM7895. To select your Plug-in Flame Signal Amplifier and applicable Flame Detector, see Table 2 and Fig. 3 through 5.

Table 2. Flame detection systems (Figs. 3, 4, 5).

Plug-in Flame Signal Amplifiers					Applicable Flame Detectors		
Type	Color	Self-Checking	Model	Flame Failure Response Time	Fuel	Type	Models
Rectification	Green	No	R7847A	.8 or 3 sec	Gas	Rectifying Flame Rod Holders[a]	C7004, C7007, C7011 Complete Assemblies: C7008, C7009, Q179.
		No	R7847A	.8 or 3 sec	Oil	Rectifying Photocell	C7003, C7010, C7013, C7014[b]
		No	R7847A	3 sec	Gas, Oil, Coal	Ultraviolet (Purple Peeper)	C7012A,C.[c]
		Dynamic AMPLI-CHECK®	R7847B[d]	.8 or 3 sec	Gas	Rectifying Flame Rod Holders[a]	C7004, C7007, C7011 Complete Assemblies: C7008, C7009, Q179.
		Dynamic AMPLI-CHECK®	R7847B[d]	.8 or 3 sec	Oil	Rectifying Photocell	C7003, C7010, C7013, C7014[b]
		Dynamic AMPLI-CHECK®	R7847B[d]	3 sec	Gas, Oil, Coal	Ultraviolet (Purple Peeper)	C7012A,C.[c]
		Dynamic Self-Check	R7847C[e]	3 sec	Gas, Oil, Coal	Ultraviolet (Purple Peeper)	C7012E,F.
Infrared	Red	No	R7848A	3 sec	Gas, Oil, Coal	Infrared (Lead Sulfide)	C7015
		Dynamic AMPLI-CHECK®	R7848B[d]	3 sec	Gas, Oil, Coal	Infrared (Lead Sulfide)	C7015
Ultraviolet	Purple	No	R7849A	.8 or 3 sec	Gas, Oil	Ultraviolet (MiniPeeper)	C7027, C7035, C7044.[c]
		Dynamic AMPLI-CHECK®	R7849B[d]	.8 or 3 sec	Gas, Oil	Ultraviolet (MiniPeeper)	C7027, C7035, C7044.[c]
		Dynamic Self-Check[f]	R7861A	3 sec	Gas, Oil, Coal	Ultraviolet	C7061
	Blue	Dynamic Self-Check[g]	R7886A[e]	3 sec	Gas, Oil, Coal	Ultraviolet (Adjustable Sensitivity)	C7076

[a] Order flame rod separately; see holder Instructions.
[b] Use *only* Honeywell Photocell, part no. 38316.
[c] The C7012A,C, C7027, C7035 and C7044 Flame Detectors should be used only on burners that cycle on-off at least once every twenty-four hours. Appliances with burners that remain on continuously for twenty-four hours or longer should use the C7012E,F Flame Detector with the R7847C Amplifier or the C7076A,D Flame Detector with the R7886A Amplifier or the C7061 Flame detector with the R7861 Amplifier as the ultraviolet flame detection system.
[d] Circuitry tests the flame signal amplifier at least 12 times a minute during burner operation and shuts down the burner if the amplifier fails.
[e] Circuitry tests all electronic components in the flame detection system (amplifier and detector) 12 times a minute during burner operation and shuts down the burner if the detection system fails.
[f] When R7861 is used with EC7895, the application requires a step down transformer. See Fig. 14.
[g] Use with RM7895A only.

Sequence Timing For Normal Operation:

Device	Initiate	Standby	Purge	Flame Establishing Period	
				Pilot	Main
EC7895A/RM7895A	10 sec.	*	**	4 or 10 sec.	No

* STANDBY and RUN can be an infinite time period.
** PURGE is determined by the ST7800A Purge Card selected.

Approval Bodies:
RM7895A:
Underwriters Laboratories Inc. listed: File no. MP268, Guide no. MCCZ.
Factory Mutual approved.
EC7895A:
Factory Mutual approved.

Mounting:
Q7800A for panel mount or Q7800B for wall or burner mount.

Required Components:
Plug-in Flame Signal Amplifier, see Table 2.
Plug-in Purge Timer Cards: Selectable ST7800A, two seconds to 30 minutes.
Q7800A or Q7800B.

Accessories:
Optional:
Network Interface Unit,
Part No. Q7700A1014, 120V 50/60 Hz
Part No. Q7700B1004, 100V to 200V 50/60 Hz
Network Interface ControlBus Module,
Part No. QS7800A1001.
COMBUSTION SYSTEM MANAGER™,
Part No. ZM7850A1001.
ControlBus 5-Wire Electrical Connector,
Part No. 203541.
DATA CONTROLBUS MODULE™,
Part No. S7810A1009.
Dust Cover, Part No. 221729A.
Flame Simulators:
UV Flame Simulator, Part No. 203659.
Rectification Simulator, Part No. 123514A.
Keyboard Display Module, Part No. S7800A1001, English.
Keyboard Display Module, Part No. S7800A1118, Japanese.
Remote Display Mounting Bracket, Part No. 203765.
Remote Display Power Supply, Part No. 203968A Plug-in.
Remote Reset Module, Part No. 57820A1007.
Sixty-inch Extension Cable Assembly, Part No. 221818A.

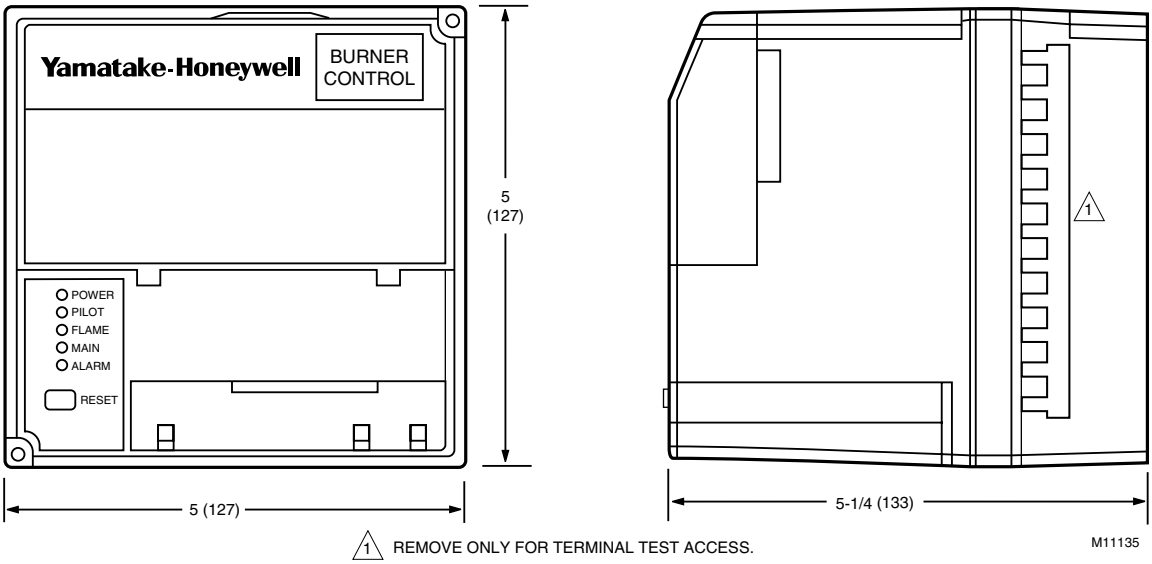

Fig. 1. Mounting dimensions of EC7895/RM7895 Relay Module and Q7800A Subbase in in. (mm).

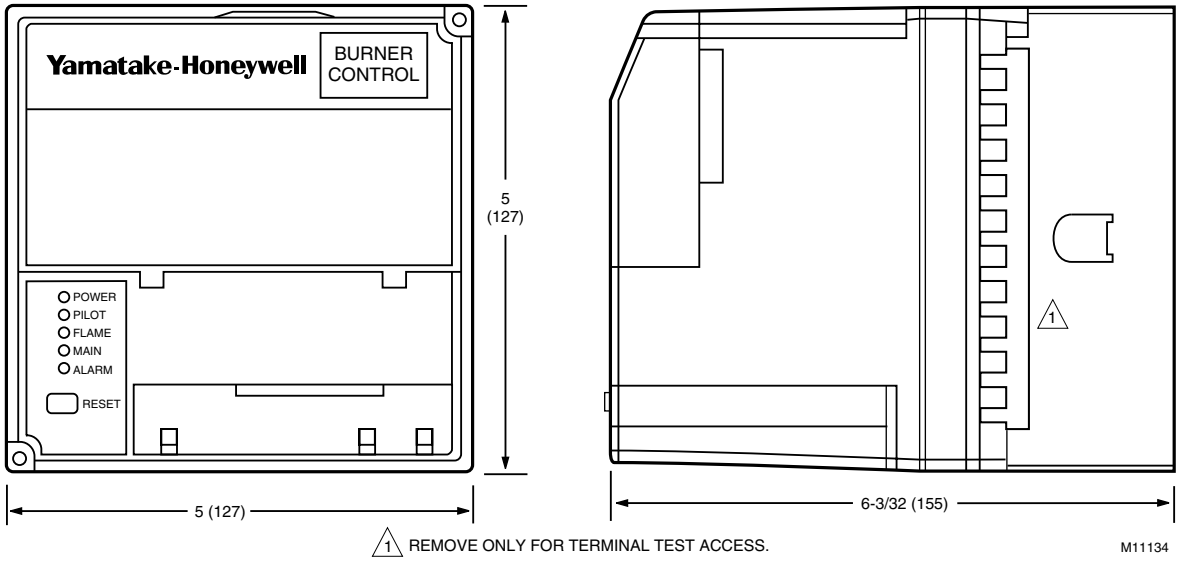

Fig. 2. Mounting dimensions of EC7895/RM7895 Relay Module and Q7800B Subbase in in. (mm).

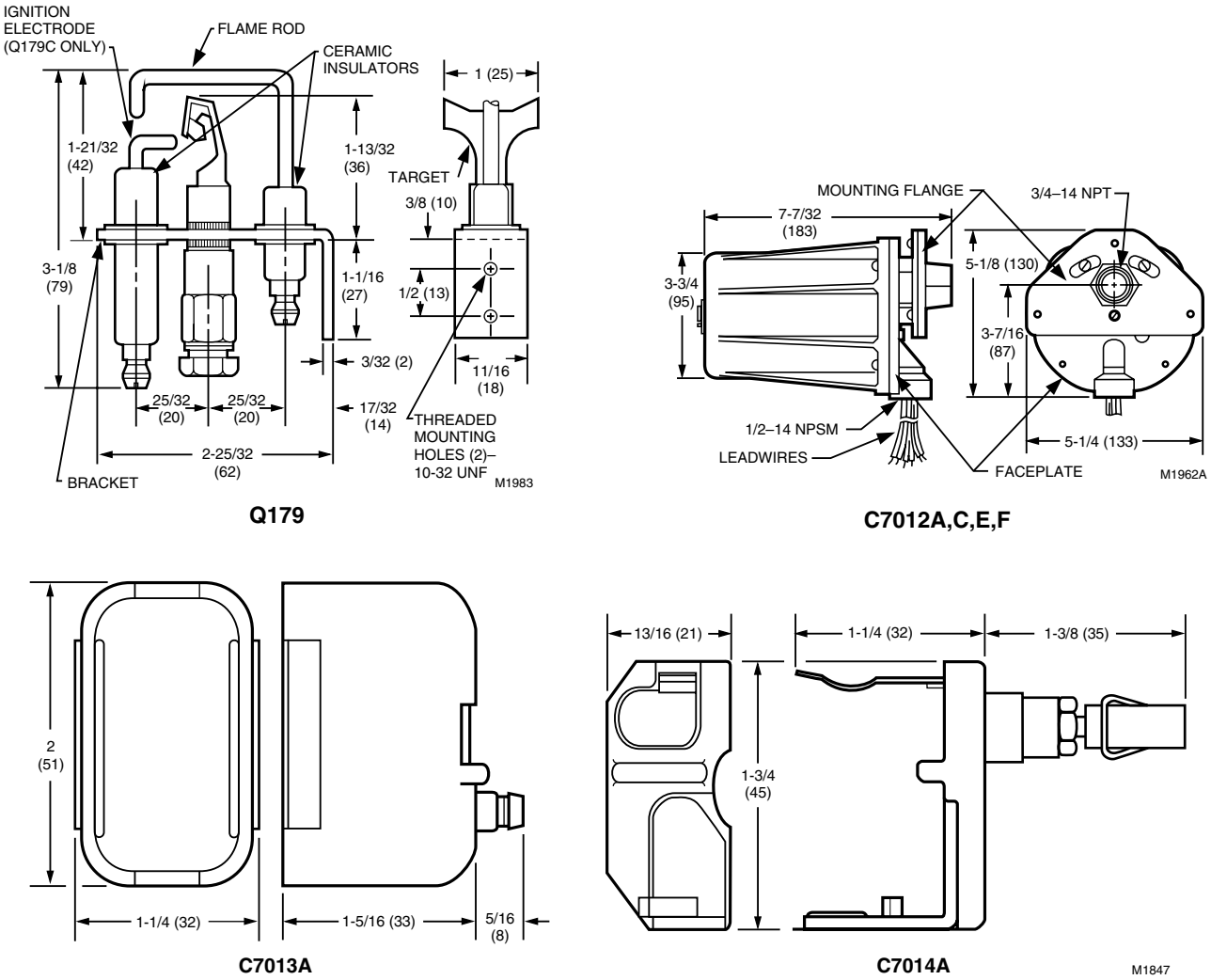

Fig. 3. Rectification detectors.

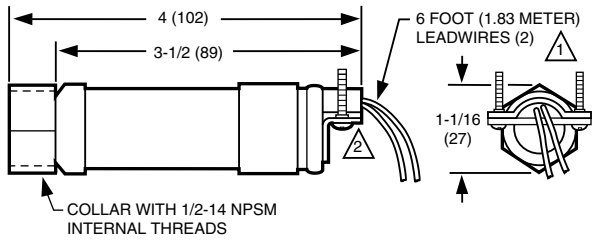

1 MODEL AVAILABLE WITH 24 FOOT (7.32 METER) LEADWIRES.

2 MODELS AVAILABLE WITH SPUD CONNECTOR (1/2-14 NPSM INTERNAL THREADS) INSTEAD OF CLAMP TYPE CONNECTOR.

M1943A

C7027

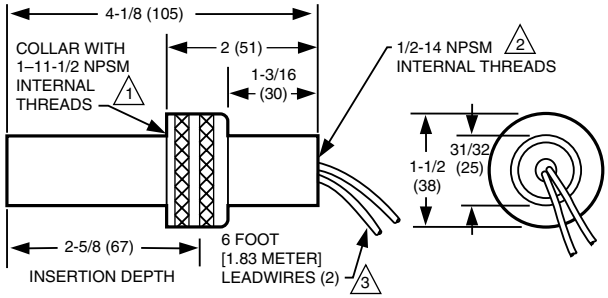

1 DIN APPROVED C7035A1064 HAS 1-11 BSP.P1 INTERNAL THREADS.

2 DIN APPROVED C7035A1064 HAS 1/2-14 BSP-F INTERNAL THREADS.

3 MODEL AVAILABLE WITH 12 FOOT [3.66 METER] LEADWIRES.

M1945A

C7035

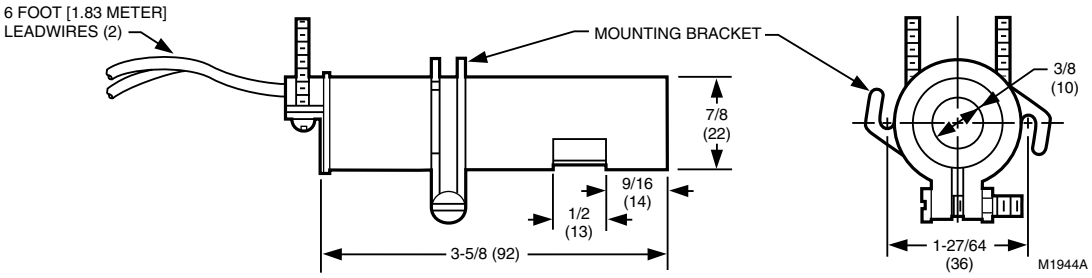

C7044

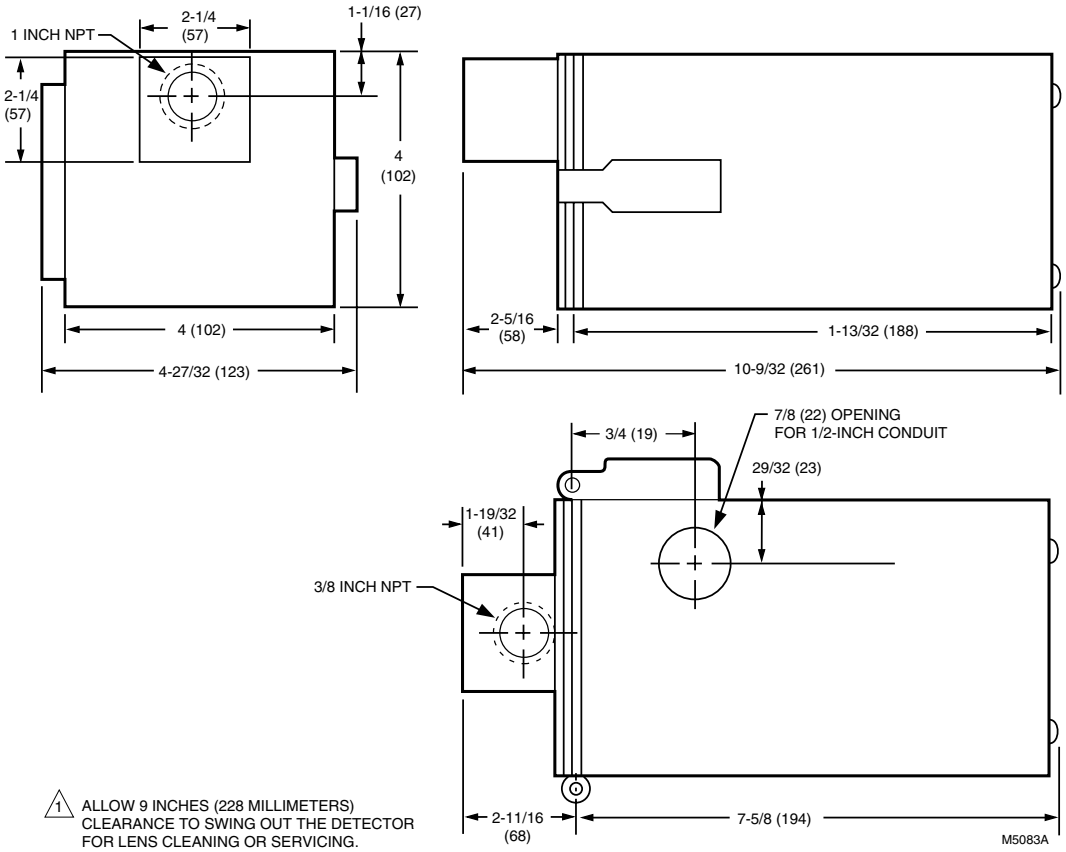

1 ALLOW 9 INCHES (228 MILLIMETERS) CLEARANCE TO SWING OUT THE DETECTOR FOR LENS CLEANING OR SERVICING.

C7076A

Fig. 4. Ultraviolet detectors in in. (mm).

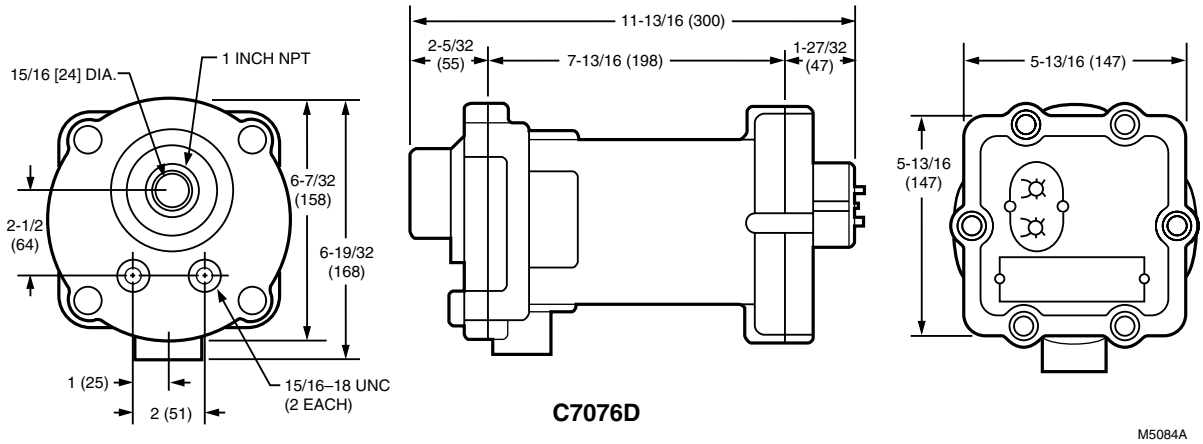

Fig. 4. Ultraviolet detectorsin in. (mm) *(Continued).*

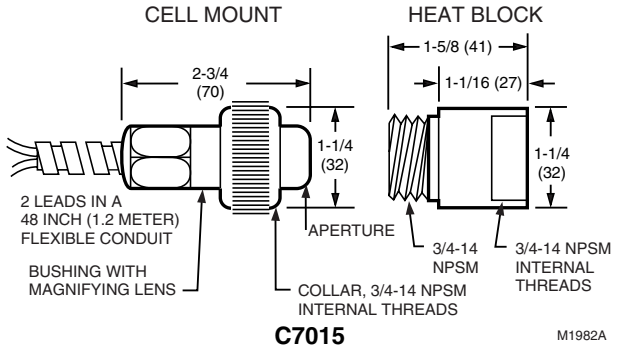

Fig. 5. Infrared detector in in. (mm).

PRINCIPAL TECHNICAL FEATURES

The EC7895 or RM7895 provides all customary flame safeguard functions while providing significant advancements in the areas of safety, annunciation and system diagnostics.

Safety Shutdown (Lockout) Occurs If:

1. Initiate Period
   a. Purge card is not installed or removed.
   b. Purge card is bad.
   c. Configuration jumpers have been changed (after 200 hours).
   d. AC line power errors occurred, see Operation.
   e. Four minute INITIATE period was exceeded.
2. Standby Period
   a. Flame signal is present after 40 seconds.
   b. Ignition/pilot valve/intermittent pilot valve terminal is energized.
   c. Main valve terminal is energized.
   d. Internal system fault occurred.
   e. Purge card is not installed or removed.
   f. Purge card is bad.
3. Prepurge Period
   a. Airflow lockout feature is enabled and the airflow switch does not close after ten seconds or within the specified purge card timing.
   b. Flame signal is detected after 30 seconds.
   c. Ignition/pilot valve/intermittent pilot valve terminal is energized.
   d. Main valve terminal is energized.
   e. Internal system fault occurred.
   f. Purge card is removed.
   g. Purge card is bad.
4. Pilot Flame Establishing Period (PFEP)
   a. Airflow lockout feature is enabled and the airflow switch opens.
   b. Ignition/pilot valve terminal is not energized.
   c. No flame present at end of PFEP.
   d. Main valve terminal is energized.
   e. Internal system fault occurred.
   f. Purge card is removed.
   g. Purge card is bad.
5. Run Period
   a. No flame present.
   b. Airflow lockout feature is enabled and the airflow switch opens.
   c. Main valve terminal is not energized.
   d. Internal system fault occurred.
   e. Purge card is removed.
   f. Purge card is bad.

SAFETY PROVISIONS

Internal Hardware Status Monitoring

The EC7895 or RM7895 checks the purge card for correct parity to prevent purge timing shifts and circuitry failures. It also analyzes the integrity of the configuration jumpers and internal hardware. The POWER LED blinks every four seconds, signifying an internal hardware check.

Closed Loop Logic Test

The test verifies the integrity of all safety critical loads, terminals 8, 9, 10 and 21. If the loads are not energized properly; i.e., the main valve terminal is powered during PREPURGE, the EC7895 or RM7895 locks out on safety shutdown. The EC7895 or RM7895 must react to input changes but avoid the occurrence of *nuisance* shutdown events. Signal conditioning is applied to line voltage inputs to verify proper operation in the presence of *normal* electrical line noise such as transient high voltage spikes or short periods of line dropout. Signal conditioning is tolerant of synchronous noise (line noise events that occur at the same time during each line cycle).

Dynamic Ampli-Check®

Dynamic AMPLI-CHECK® circuitry tests the flame signal amplifier during burner operation and shuts down the EC7895 or RM7895 if the flame amplifier fails.

Dynamic Flame Amplifier and Shutter Check

Self-checking circuitry tests all electronic components in the flame detection system and amplifier 10 to 12 times per minute and shuts down the EC7895 or RM7895 if the detection system fails.

Dynamic Input Check

All system input circuits are examined to assure that the EC7895 or RM7895 is capable of recognizing the true status of external controls, limits and interlocks. If any input fails this test, a safety shutdown occurs and the fault is annunciated.

Dynamic Safety Relay Test

Checks the ability of the dynamic safety relay contact to open and close. Verifies that the safety critical loads, terminals 8, 9, 10 and 21, can be de-energized, as required, by the Dynamic Self-Check logic.

Dynamic Self-Check Safety Circuit

The microcomputer tests itself and related hardware, and at the same time, the safety relay system tests the microcomputer operation. If a microcomputer or safety relay failure occurs and does not allow proper execution of the self-check routine, safety shutdown occurs and all safety critical loads are de-energized.

Expanded Safe-Start Check

The conventional safe-start check, which prevents burner start-up if flame is indicated at start-up, is expanded to include a flame signal check during STANDBY, an airflow switch check and a safety critical load check.

Off Cycle (Standby or Prepurge) Flame Signal Check

The flame detection subsystem (flame detector and amplifier) is monitored during STANDBY. If a flame simulating condition or an actual flame exists, a system hold occurs and start-up is prevented. If the flame signal exists at any time after the first 40 seconds of STANDBY, a safety shutdown occurs and is annunciated. A shutter-check amplifier and self-checking detector are energized for the first 40 seconds during STANDBY and the last two seconds before exiting STANDBY. If a flame exists, a safety shutdown occurs. An AMPLI-CHECK® Amplifier is energized continually through STANDBY and PREPURGE to detect any possibility of a runaway detector or a flame. If a flame exists, a safety shutdown occurs. A standard amplifier is energized continually through STANDBY and PREPURGE; if a flame exists, a safety shutdown occurs.

Tamper Resistant Timing and Logic

Safety and logic timings are inaccessible and cannot be altered or defeated.

Verified Spark Termination

The ignition terminal is monitored to assure early spark termination (ten seconds ignition and pilot and ten seconds *pilot and main only*).

First-Out Annunciation AND Self-Diagnostics

Sequence Status Lights (LEDs) provide positive visual indication of the program sequence: POWER, PILOT, FLAME, MAIN and ALARM. The green POWER LED blinks every four seconds, signifying that the RM7895 hardware is running correctly.

Optional multi-function Keyboard Display Module shows elapsed time during PREPURGE, PILOT IGN and MAIN IGN. As an additional troubleshooting aid, it provides sequence timing, diagnostic information and historical information when a safety shutdown or hold or normal operation occurs.

First-out Annunciation reports the cause of a safety shutdown or identifies the cause of a failure to start or continue the burner control sequence with text and numbered code via the optional Keyboard Display Module. It monitors all field input circuits, including the flame signal amplifier. The system distinguishes 43 modes of failure and detects and annunciates difficult-to-find intermittent failures.

Self-Diagnostics add to the First-out Annunciation by allowing the EC7895 or RM7895 to distinguish between field (external device) and internal (system related) problems. Faults associated within the flame detection subsystem, EC7895 or RM7895 or Plug-in Purge Card are isolated and reported by the optional Keyboard Display Module. See the 7800 SERIES System Annunciation Diagnostics and Troubleshooting, form 65-0118.

Airflow Switch Interlock

This interlock is typically connected to an airflow switch. The Airflow Interlock (ILK) input must close ten seconds into PREPURGE or within the specified purge card timing; otherwise, a recycle to the beginning of PRE-PURGE or lockout will occur, depending on how the airflow switch selectable jumper is configured (see Table 3 in Operation section).

INSTALLATION

⚠ WARNING

FIRE OR EXPLOSION HAZARD
CAN CAUSE PROPERTY DAMAGE,
SEVERE INJURY, OR DEATH

To prevent possible hazardous burner operation, verification of safety requirements must be performed *each time* a control is installed on a burner.

When Installing this Product…

1. Read these instructions carefully. Failure to follow them could damage the product or cause a hazardous condition.
2. Check the ratings given in the instructions and marked on the product to make sure the product is suitable for your application.
3. Installer must be a trained, experienced, flame safeguard service technician.
4. After installation is complete, check out the product operation as provided in these instructions.

⚠ CAUTION

1. Disconnect the power supply before beginning installation to prevent electrical shock and equipment damage. More than one power supply disconnect may be involved.
2. Wiring connections for the EC7895 or RM7895 are unique; therefore, refer to Fig. 7 or 8 for the correct Specifications for proper subbase wiring.
3. Wiring must comply with all applicable codes, ordinances and regulations.
4. Wiring, where required, must comply with NEC Class 1 (Line Voltage) wiring.
5. Loads connected to the EC7895 or RM7895 must not exceed those listed on the EC7895 or RM7895 label or the Specifications, see Table 1A or 1B.
6. Limits and interlocks must be rated to carry and break current simultaneously to the ignition transformer, pilot valve, and main fuel valve(s).
7. All external timers must be listed or components recognized by authorities who have jurisdiction for specific purpose for which they are used.

IMPORTANT

1. *For on-off gas-fired systems, some authorities who have jurisdiction prohibit the wiring of any limit or operating contacts in series between the flame safeguard control and the main fuel valve(s).*
2. *Two Detectors can be connected in parallel with the exception of Infrared Detectors (C7015).*
3. *This equipment generates, uses and can radiate radio frequency energy and, if not installed and used in accordance with the instructions, may cause interference to radio communications. It is designed to meet the requirements for a Class B computing device of part 15 of FCC rules, which are designed to provide reasonable protection against such interference when operated in a commercial environment. Operation of this equipment in a residential area may cause interference; in which case, the user at their own expense may be required to take whatever measures are required to correct this interference.*

Humidity

Install the EC7895 or RM7895 where the relative humidity never reaches the saturation point. The EC7895 or RM7895 is designed to operate in a maximum 85% RH continuous, noncondensing, moisture environment. Condensing moisture can cause a safety shutdown.

Vibration

Do not install the EC7895 or RM7895 where it could be subjected to vibration in excess of 0.5G continuous maximum vibration.

Weather

The EC7895 or RM7895 is not designed to be weather tight. If installed outdoors, the EC7895 or RM7895 must be protected by an approved weather-tight enclosure.

Mounting Wiring Subbase

NOTE: For installation dimensions, see Fig. 1 or 2.

1. Mount the subbase in any position except horizontally with the bifurcated contacts pointing down. The standard vertical position is recommended. Any other position decreases the maximum ambient temperature rating.
2. Select a location on a wall, burner or electrical panel. The Q7800 can be mounted directly in the control cabinet. Be sure to allow adequate clearance for servicing, installation, access and removal of the EC7895 or RM7895, Dust Cover, flame amplifier, flame amplifier signal voltage probes, Run/Test Switch, electrical signal voltage probes and electrical field connections.
3. For surface mounting, use the back of the subbase as a template to mark the four screw locations. Drill the pilot holes.
4. Securely mount the subbase using four no. 6 screws.

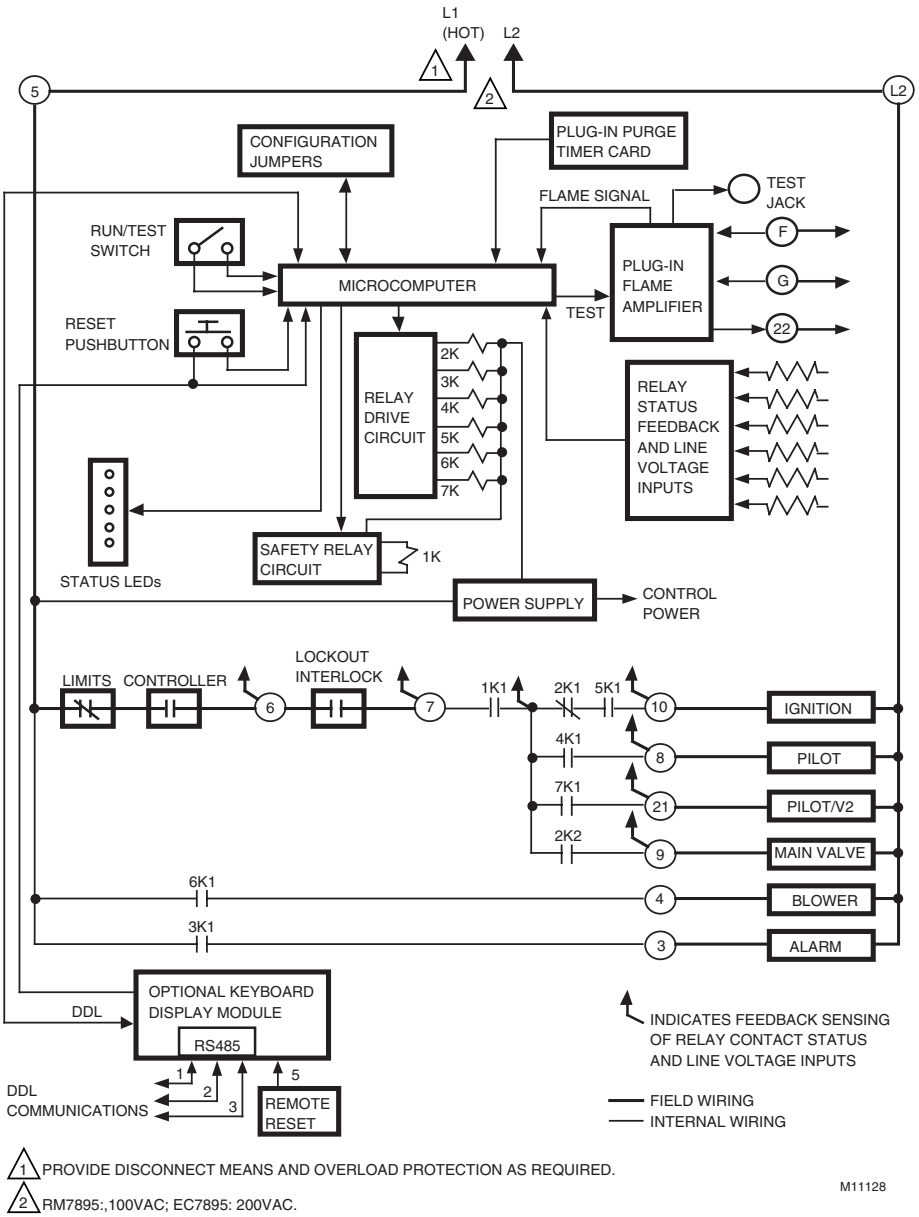

Fig. 6. Internal block diagram of the EC7895 or RM7895 (see Fig. 7 and 8 for detailed wiring instructions).

WIRING

1. a. For proper wiring, refer to Fig. 7 or 8.
   b. For proper remote wiring of the Keyboard Display Module, refer to the Specifications for the Keyboard Display Module (65-0090), Communication Interface Base Unit (63-2278), DATA CONTROLBUS MODULE™ (65-0091) or Extension Cable Assembly (65-0131).
2. Disconnect the power supply from the main disconnect before beginning installation to prevent electrical shock and equipment damage. More than one disconnect may be involved.
3. All wiring must comply with all appropriate electrical codes, ordinances and regulations. Wiring, where required, must comply with NEC Class 1 (Line Voltage) wiring.
4. Recommended wire size and type: use no. 14, 16, or 18 copper conductor (TTW60C or THW75C or THHN90C) 600 volt insulation wire for all Line Voltage terminals. For high temperature installations, use wire selected for a temperature rating above the maximum operating temperature. All leadwires must be moisture resistant.
5. Recommended grounding practices:
   a. Use the earth ground to provide a connection between the subbase and the control panel or the equipment. The earth ground wire must be capable of conducting the current to blow the 20A fuse (or breaker) in event of an internal short circuit. The EC7895 or RM7895 needs a low impedance ground connection to the equipment frame which, in turn, needs a low impedance connection to earth ground. For a ground path to be low impedance at RF frequencies, the connection must be made with minimum length conductors that have a maximum surface area. Wide straps or brackets are preferred rather than leadwires. Be careful to verify that mechanically tightened joints along the ground path, such as pipe or conduit threads or surfaces held together with fasteners, are free of nonconductive coatings and are protected against mating surface corrosion.

b. For EC7895 or RM7895, each device has an earth ground terminal that must be grounded to the metal control panel with wire as short as practical. Each ground wire must be capable of carrying a fault current equal to the rating of the protective fuse (20A). A number 14 copper conductor is adequate but wide straps or brackets are preferred rather than leadwires.

6. Recommended wire routing for flame detector leadwires:
   1. Do not run high voltage ignition transformer wires in the same conduit with the flame detection wiring.
   2. Do not route scanner wires in a conduit with line voltage circuits.
   3. Enclose scanner wires without armor cable in metal cable or conduit.
   4. Follow directions given in the flame detector Instructions.
7. Maximum wire lengths:
   a. For the EC7895 or RM7895, the maximum length of leadwire to the terminal inputs is 300 feet (Control and Airflow Interlock).
   b. For the flame detector leadwires, the maximum flame sensor leadwire length is limited by the flame signal strength.
8. Make sure loads do not exceed the terminal ratings. Refer to the label on the EC7895 or RM7895 or to the ratings in the Specifications, see Table 1A or 1B.
9. Check the power supply circuit. The voltage and frequency tolerance must match those of the EC7895 or RM7895. A separate power supply circuit may be required for the EC7895 or RM7895 with the required disconnect means and overload protection added.
10. Check all wiring circuits and complete the Static Checkout, see Table 4, before installing the EC7895 or RM7895 on the subbase.
11. Install all electrical connectors.
12. Restore power to the panel.

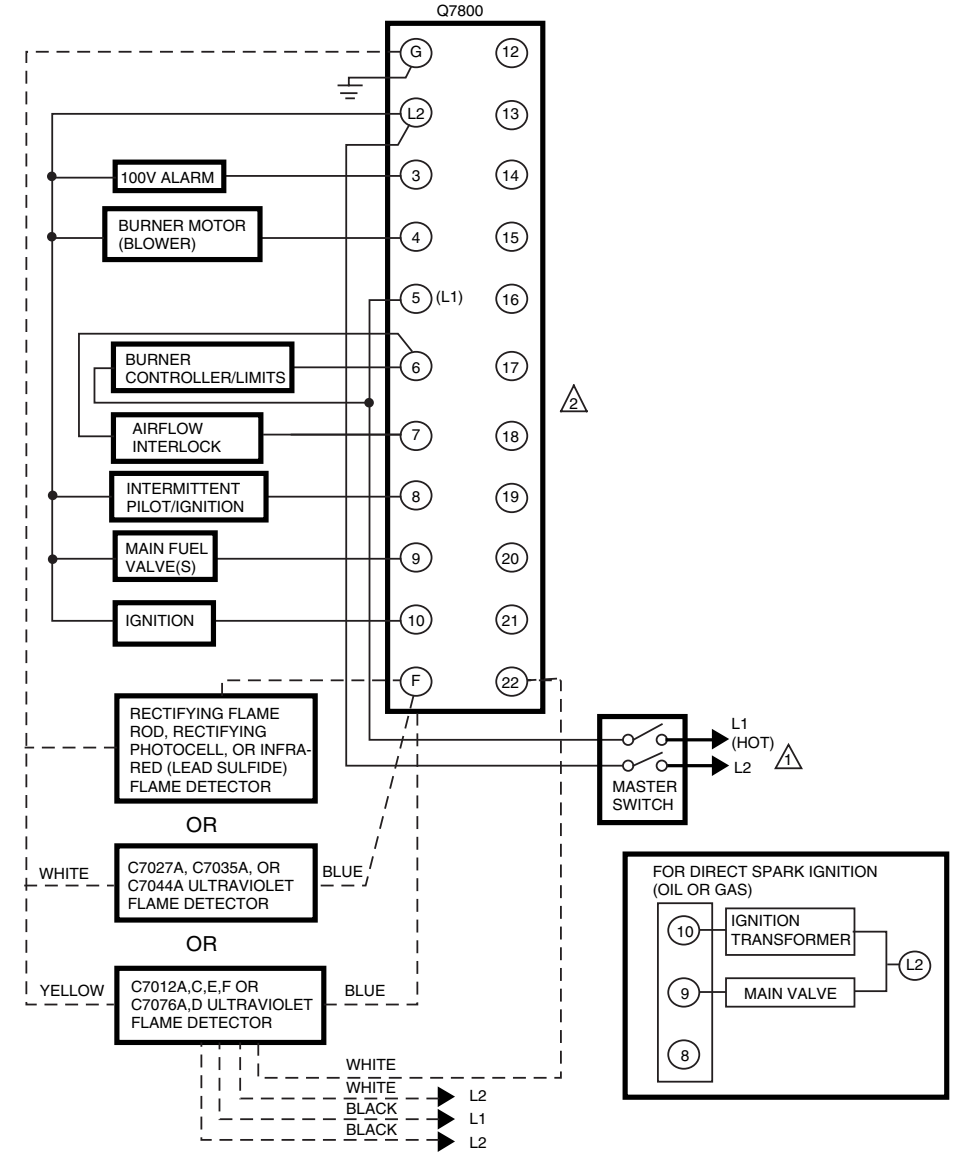

Fig. 7. Wiring the RM7895A.

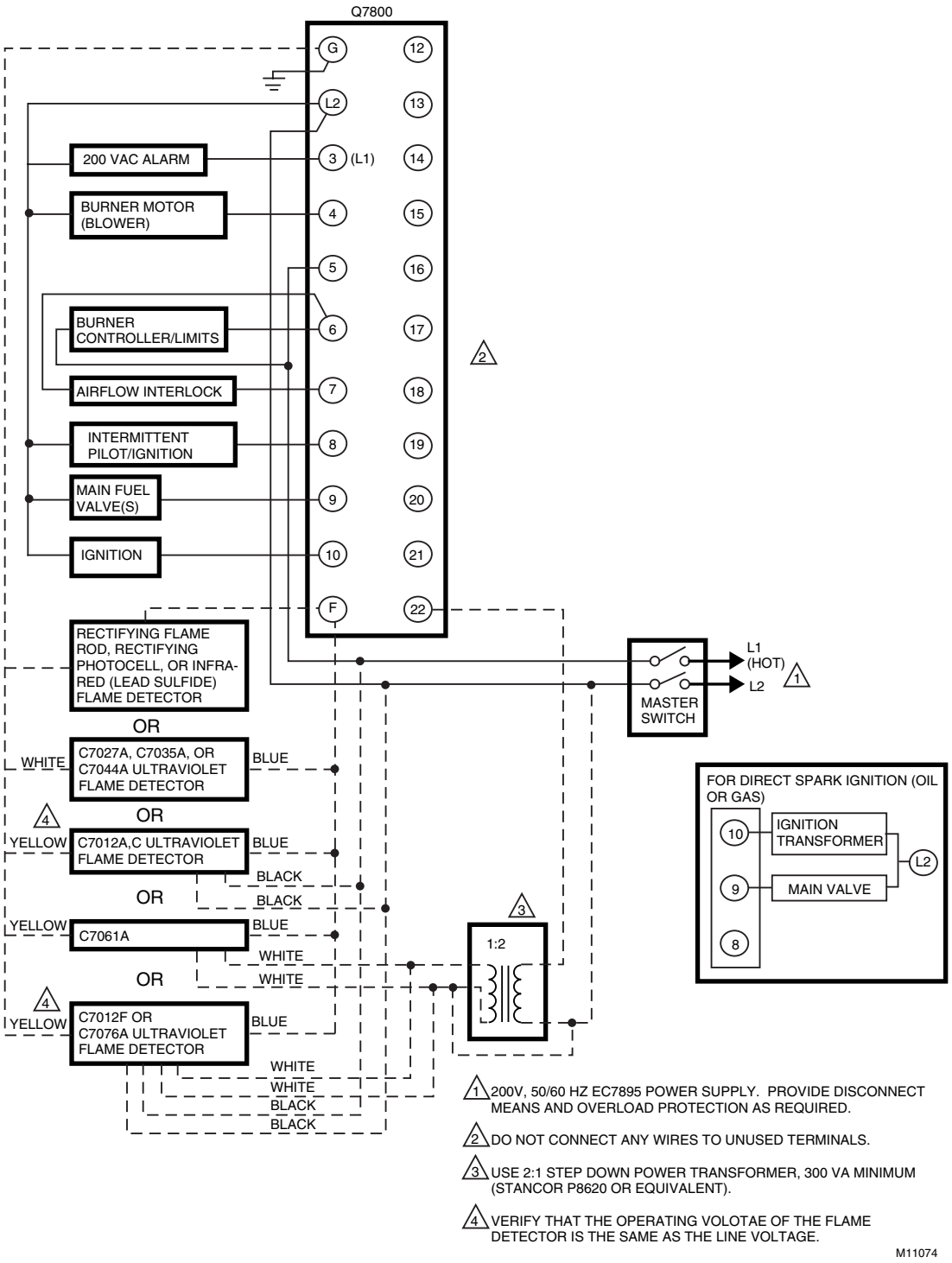

Fig. 8. Wiring the EC7895.

ASSEMBLY

Mounting RM7895

NOTE: For installation dimensions, see Fig. 1 or 2.

Relay Module Mounting

1. Mount the EC7895 or RM7895 vertically, see Fig. 9 or 10, or mount horizontally with the knife blade terminals pointing downward. When mounted on the Q7800A, the EC7895 or RM7895 must be in an electrical enclosure, see Fig. 9.
2. Select the location in the electrical enclosure. Be sure to allow adequate clearance for servicing, installation and removal of the EC7895 or RM7895, Dust Cover, flame amplifier, flame amplifier signal voltage probes, electrical signal voltage probes and electrical connections.
   a. Allow an additional two inches below the EC7895 or RM7895 for the flame amplifier mounting.
   b. Allow an optional three-inch minimum to both sides of the EC7895 or RM7895 for electrical signal voltage probes.
3. Make sure no subbase wiring is projecting beyond the terminal blocks. Tuck wiring in against the back of the subbase so it does not interfere with the knife blade terminals or bifurcated contacts.
4. Mount the EC7895 or RM7895 by aligning the four L shaped corner guides and knife blade terminals with the bifurcated contacts on the wiring subbase and securley tightening the two screws without deforming the plastic.

IMPORTANT

Install the EC7895 or RM7895 with a plug-in motion rather than a hinge action.

Installing ST7800 Purge Card

1. Remove the Dust Cover, Keyboard Display Module, DATA CONTROLBUS MODULE™or Extension Cable Assembly.
2. Remove the current ST7800 from the EC7895 or RM7895 by pulling upward on the plastic support cover, see Fig. 12.
3. Make sure that the ST7800 selected has the desired timing.
4. Insert the Purge Card into the opening of the RM7895 compartment, see Fig. 11.
5. Reinstall the Dust Cover, Keyboard Display Module, DATA CONTROLBUS MODULE™ or Extension Cable Assembly onto the EC7895 or RM7895 and restore power to the device.

Run the burner system through at least one complete cycle to verify the system is operating as desired.

Mounting Dust Cover

1. Align the two interlocking ears of the Dust Cover with the two mating slots on the EC7895 or RM7895, see Fig. 12.
2. Insert the two interlocking ears into the two mating slots, and with a hinge action, push on the upper corners of the Dust Cover to secure it to the EC7895 or RM7895.
3. Be sure the Dust Cover is firmly in place.

Installing Plug-In Flame Signal Amplifier

1. Disconnect the power supply before beginning installation to prevent electrical shock and equipment damage. More than one disconnect may be involved.
2. Align the amplifier circuit board edge connector with the keyed receptacle on the EC7895 or RM7895. Ensure the amplifier nameplate faces away from the Relay Module, see Fig. 13.
3. Push in the amplifier until the circuit board is fully inserted into the receptacle and then push the amplifier toward the EC7895 or RM7895 retaining clasp.
4. Verify the amplifier is firmly in place.
5. Perform all required checkout tests.

Installing the Flame Detector

NOTE: Table 2 lists the flame detection systems available for use with the EC7895 or RM7895. Make sure the correct combination of amplifier and flame detector(s) is used.

Proper flame detector installation is the basis of a safe and reliable flame safeguard installation. Refer to the Instructions packed with the flame detector and the equipment manufacturer instructions.

Keep the flame signal leadwires as short as possible from the flame detector to the wiring subbase. Capacitance increases with leadwire length, reducing the signal strength. The maximum permissible leadwire length depends on the type of flame detector, leadwire and conduit. The ultimate limiting factor in the flame detector leadwire is the flame signal; see Table 5.

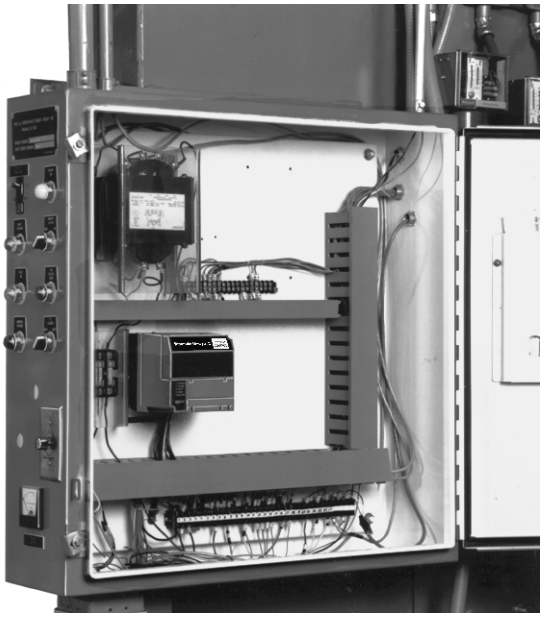

Fig. 9. Electrical panel installation.

Fig. 10. Wall or burner installation.

Fig. 12. Dust Cover mounting.

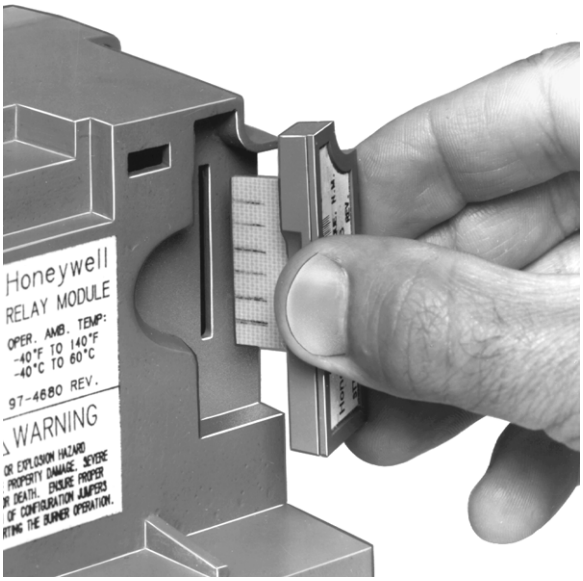

Fig. 11. ST7800 Purge Card installation.

Fig. 13. Flame signal amplifier mounting.

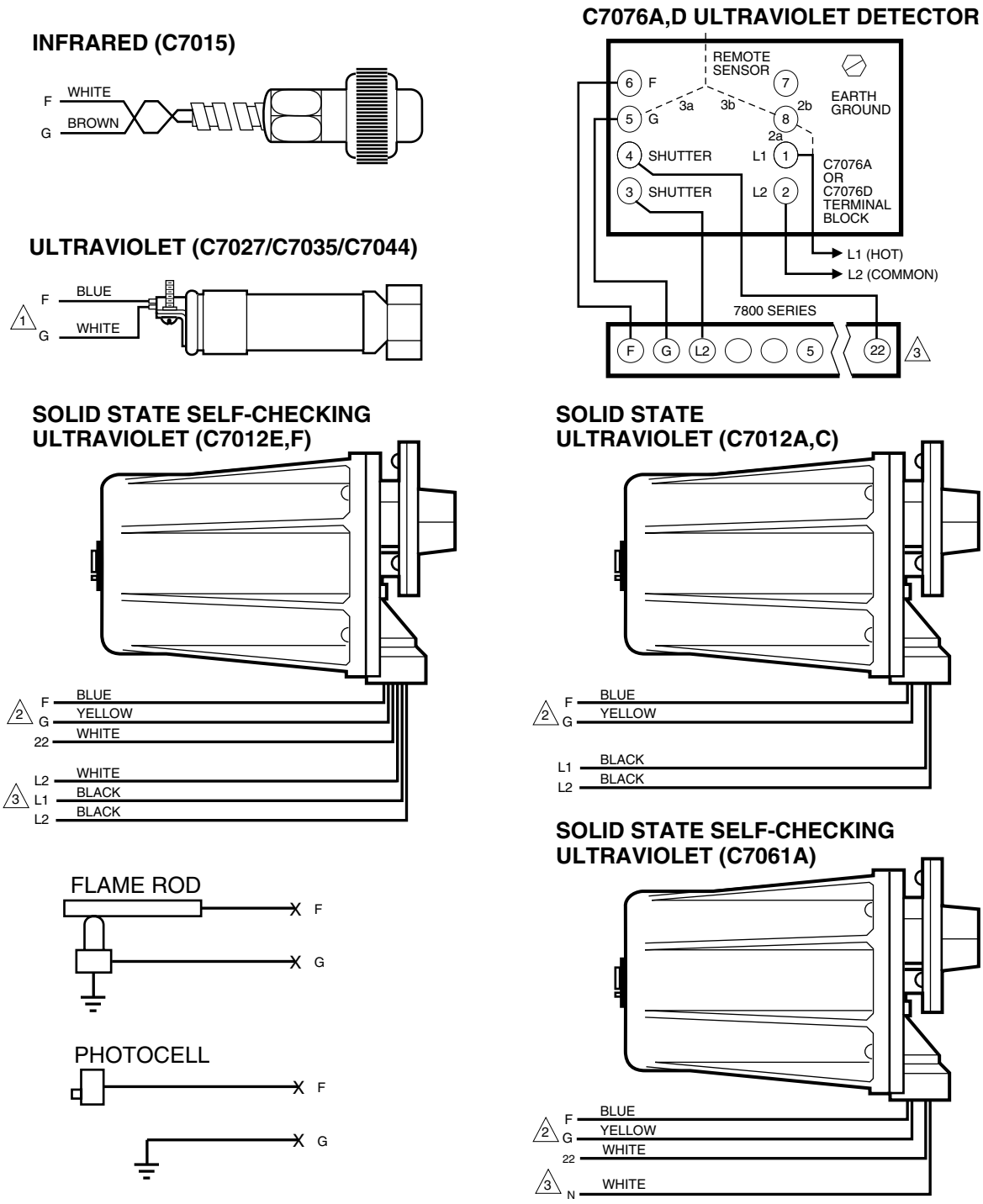

1 FLAME DETECTOR LEADS ARE COLOR CODED. THE BLUE LEAD MUST BE CONNECTED TO THE F TERMINAL AND THE WHITE MUST BE CONNECTED TO THE G TERMINAL. THE UV SENSING TUBE IS POLARITY SENSITIVE. REVERSING THE LEADS EVEN MOMENTARILY CAN DAMAGE OR DESTROY THE UV TUBE.

2 FLAME DETECTOR LEADS ARE COLOR CODED. THE BLUE LEAD MUST BE CONNECTED TO THE F TERMINAL AND THE YELLOW MUST BE CONNECTED TO THE G TERMINAL. THE UV SENSING TUBE IS POLARITY SENSITIVE. REVERSING THE LEADS EVEN MOMENTARILY CAN DAMAGE OR DESTROY THE UV TUBE.

3 WHEN USING A C7061A OR 200V VERSIONS OF THE C7012E,F, OR C7076A, A 2:1 STEP DOWN TRANSFORMER IS REQUIRED. SEE FIGURE 8.

M11131

Fig. 14. Flame detector wiring.

OPERATION

Sequence of Operation

The EC7895 or RM7895 has the following operating sequences, see Fig. 15.

Initiate

The EC7895 or RM7895 enters the INITIATE sequence when the Relay Module is powered. The EC7895 or RM7895 can also enter the INITIATE sequence if the Relay Module verifies voltage fluctuations of +10/-15% or frequency fluctuations of +/- 10% during any part of the operating sequence. The INITIATE sequence lasts for ten seconds unless the voltage or frequency tolerances are not met. When the tolerances are not met, a hold condition is initiated and is displayed on the optional VFD for at least five seconds. When the tolerances are met, the INITIATE sequence restarts. If the condition is not corrected and the hold condition exists for four minutes, the RM7895 locks out. Causes for hold conditions in the INITIATE sequence are:

- AC line dropout is detected.
- AC line noise that can prevent a sufficient reading of the line voltage inputs.
- Brownouts caused by a low line voltage.

The INITIATE sequence also delays the burner motor starter from being energized and de-energized from an intermittent AC line input or control input.

Standby

The EC7895 or RM7895 is ready to start an operating sequence when the operating control input determines a *call for heat* is present. The burner switch, limits, operating limit control and all microcomputer monitored circuits must be in the correct state for the EC7895 or RM7895 to continue into the PRE-PURGE sequence.

Normal Start-Up Prepurge

The EC7895 or RM7895 provides a selectable PREPURGE timing from two seconds to 30 minutes with power applied and the EC7895 or RM7895 operating control indicating a *call for heat*.

a. Airflow Interlock, burner switch, and all microcomputer monitored circuits must be in the correct operating state.
b. The blower motor output, terminal 4, is powered to start the PREPURGE sequence.
c. The Airflow Interlock input must close ten seconds into PREPURGE or within the specified purge card timing; otherwise, a recycle to the beginning of PRE-PURGE or lockout occurs depending on how the airflow switch selectable jumper is configured.

Ignition Trials

a. Pilot Flame Establishing Period (PFEP):
    1. The pilot valve and ignition transformer, terminals 8 and 10, are energized. The EC7895 or RM7895A has an intermittent pilot valve, terminal 8.
    2. Flame must be proven by the end of the 4 or 10 sec-ond PFEP to allow the sequence to continue. If flame is not proven by the end of PFEP, a safety shutdown occurs.
    3. At the end of PFEP, the ignition, terminal 10, is de-energized.
b. Main Flame Establishing Period (MFEP):
    1. After the Ignition Trials, and with the presence of flame, the main fuel valve, terminal 9, is powered. If a flameout occurs, the EC7895A or RM7895A will lock out or recycle within .8 or 3 seconds, depending on the Flame Failure Response Time (FFRT) of the amplifier.

Run

1. The EC7895A or RM7895 is now in RUN and remains in RUN until the controller input, terminal 6, opens, indicating that the demand is satisfied or a limit opened.

See Table 6 for further details of Hold conditions.

Selectable Site-Configurable Jumpers

The EC7895 or RM7895 has three site-configurable jumper options, see Fig. 17 and Table 3. The site-configurable jumpers should be clipped with side cutters and the resistors removed from the Relay Module.

SERVICE NOTE: Clipping and removing a site-configurable jumper enhances the level of safety.

Static Checkout

⚠ CAUTION

1. Use extreme care while testing the system. Line voltage is present on most terminal connections when power is on.
2. Open the master switch before installing or removing a jumper on the subbase.
3. Before continuing to the next test, be sure to re-move test jumper(s) used in the previous tests.
4. Replace all limits and interlocks not operating properly. Do not bypass limits and interlocks.
5. Close all manual fuel shutoff valve(s) before starting these tests.

After checking all wiring, perform this checkout before installing the EC7895 or RM7895 on the subbase. These tests verify the Q7800 Wiring Subbase is wired correctly, and that the exter-nal controllers, limits, interlocks, actuators, valves, transformers, motors and other devices are operating properly.

NOTE: Do not perform a dielectric test with the EC7895 or RM7895 installed. Internal surge protectors will break down and conduct a current. This could cause the EC7895 or RM7895 to fail the dielectric test or possibly destroy the internal lightning and high current transient protection components.

Equipment Recommended

1. Voltmeter (1M ohm/volt minimum sensitivity) set on the 0-300 Vac scale.
2. Two jumper wires; no. 14 wire, insulated, 12 inches (304.8 mm) long, with insulated alligator clips at both ends.

General Instructions

1. Perform all applicable tests listed in, Table 4, in the order listed.
2. *MAKE SURE THAT ALL MANUAL FUEL SHUT-OFF VALVE(S) ARE CLOSED.*
3. Perform only those tests designated for the specific RM7895 model being tested.
4. Raise the set point of the operating controller to simulate a *call for heat.*
5. For each test, open the master switch and install the jumper wire(s) between the subbase wiring terminals listed in the **Test Jumpers** column of Table 4.
6. Close the master switch before observing operation.
7. Read the voltage between the subbase wiring terminals listed in the **Voltmeter** column of Table 4.
8. If there is no voltage or the operation is abnormal, check the circuits and external devices as described in the last column.
9. Check all wiring for correct connections, tight terminal screws, correct wire, and proper wiring techniques. Replace all damaged or incorrectly sized wires.
10. Replace faulty controllers, limits, interlocks, actuators, valves, transformers, motors and other devices as required.
11. Obtain normal operation for each required test before continuing the checkout.
12. After completing each test, be sure to remove the test jumper(s).

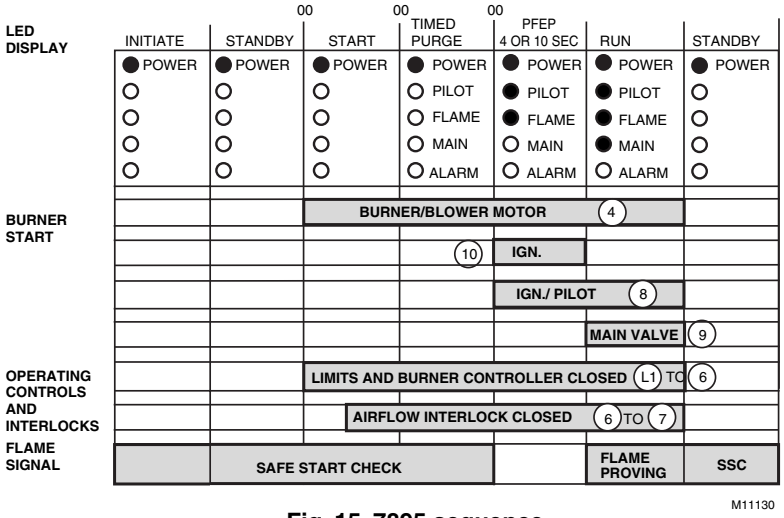

Fig. 15. 7895 sequence.

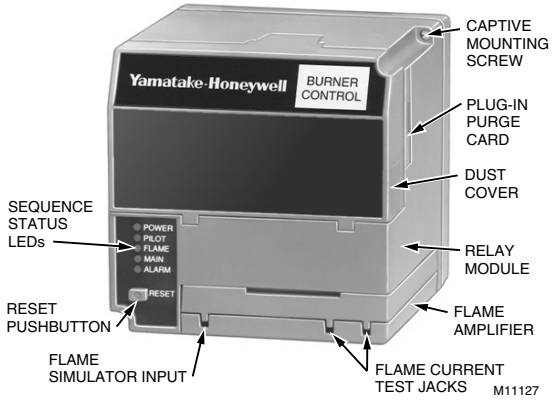

Fig. 16. Sequence status LEDs.

Table 3. Site Configurable Jumper Options.

Jumper Number	Description	Intact	Clipped
JR1	Pilot Flame Establishing Period	10 seconds	4 seconds
JR2	Flame Failure Action	Recycle	Lockout
JR3	Airflow Switch (ILK) Failure	Recycle	Lockout

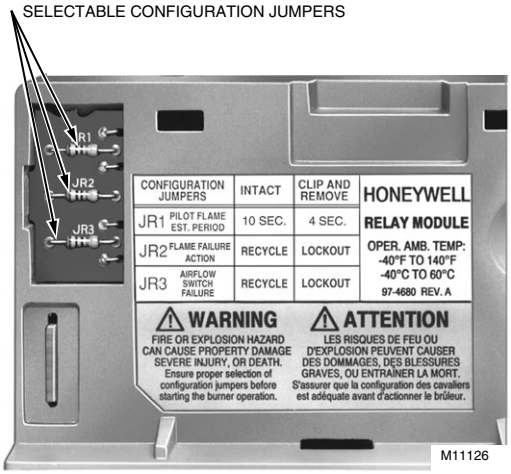

Fig. 17. Selectable site-configurable jumpers.

Table 4. Static Checkout.

Test No.	Test Jumpers	Volt-meter	Normal Operation	If Operation Is Abnormal, Check The Items Listed Below
⚠ WARNING Make sure all manual fuel shutoff valves are closed. ***IMPORTANT*** *Low fuel pressure limits, if used, could be open. Bypass them with jumpers for the remaining Static Tests (if required).*				
1	None	5-L2	Line voltage at terminal 5.	1. Master switch. 2. Power connected to the master switch. 3. Overload protection (fuse, circuit breaker) has not opened the power line.
2	None	6-L2	Line voltage at terminal 6.	1. Limits. 2. Burner controller.
3	4-5	7-L2	1. Burner motor (fan or blower) starts. 2. Line voltage at terminal 7 within 10 seconds.	1. Burner motor circuit. a. Manual switch of burner motor. b. Burner motor power supply, overload protection and starter. c. Burner motor.
4	5-10	—	Ignition spark (if ignition transformer is connected to terminal 10).	1. Watch for spark or listen for buzz. a. Ignition electrodes are clean. b. Ignition transformer is okay.
5	5-8	—	1. Ignition spark (if ignition transformer is connected to terminal 8). 2. Automatic pilot valve opens (if connected to terminal 8). NOTE: Refer to wiring diagram of system being tested.	1. Watch for spark or listen for buzz. a. Ignition electrodes are clean. b. Ignition transformer is okay. 2. Listen for click or feel head of valve for activation. a. Actuator if used. b. Pilot valve.
6	5-9	—	Automatic fuel valve(s) opens. If using direct spark ignition, check the first stage fuel valve(s) instead of the pilot valve.	Same as test no. 6. If using direct spark ignition, check the first stage fuel valve(s) instead of the pilot valve.
7	5 -3	—	Alarm (if used) turns on.	1. Alarm
Final	**⚠ CAUTION** After completing these tests, open the master switch and remove all *test jumpers* from the subbase terminals. Also remove bypass jumpers from the low fuel pressure limits (if used).			

CHECKOUT

WARNING

Do not allow fuel to accumulate in the combustion chamber. If fuel is allowed to enter the chamber for longer than a few seconds without igniting, an explosive mixture could result. It is recommended that you limit the trial for pilot to ten seconds, and limit the attempt to light the main burner two seconds from the time the fuel has reached the burner nozzle. In any case, do not exceed the nominal lightoff time specified by the equipment manufacturer. Close the manual fuel shutoff valve(s) if the flame is not burning at the end of the specified time.

CAUTION

1. Use extreme care while testing the system. Line voltage is present on most terminal connections when power is on.
2. Open the master switch before removing or installing the EC7895 or RM7895.
3. Make sure all manual fuel shutoff valve(s) are closed before starting the initial lightoff check and the Pilot Turndown tests.
4. Do not put the system in service until you have satisfactorily completed all applicable tests in this section and any others required by the equipment manufacturer.

CAUTION

If an EC7895 or RM7895 is replaced with a lower or higher functioning 7800 SERIES Relay Module, the burner will not sequence unless wiring changes are made.

IMPORTANT

1. *If the system fails to perform properly, refer to 7800 SERIES System Annunciation Diagnostics and Troubleshooting, form 65-0118.*
2. *Repeat ALL required Checkout tests after all adjustments are made. ALL tests must be satisfied with the flame detector(s) in its FINAL position.*

Equipment Recommended

Volt-ohmmeter (1M ohm/volt minimum sensitivity):

- 0-300 Vac capability.
- 0-6000 ohm capability.
- 0-10 Vdc capability.

Checkout Summary

- Preliminary inspection—all installations.
- Flame signal measurement—all installations.
- Initial lightoff check for proved pilot—all installations using a pilot.
- Initial lightoff check for direct spark ignition of oil—all burners using DSI.
- Pilot turndown test—all installations using a pilot.
- Hot refractory saturation test—all installations using Infrared (lead sulfide) Flame Detectors.
- Hot refractory hold-in test—all installations.
- Ignition interference test—all installations using flame rods.
- Ignition spark pickup—all installations using Ultraviolet Flame Detectors.
- Response to other ultraviolet sources—all installations using Ultraviolet Flame Detectors.
- Flame signal with hot combustion chamber—all installations.
- Safety shutdown tests—all installations.

See Fig. 1 and 2 for location of component parts and see Fig. 7 or Q7800 Specifications for terminal locations.

Preliminary Inspection

Perform the following inspections to avoid common problems. Be sure:

1. Wiring connections are correct and all terminal screws are tight.
2. Flame detector(s) is clean, installed and positioned properly. Consult the applicable Instructions.
3. Correct combination of amplifier and flame detector is used (see Table 2).
4. Plug-in amplifier and purge card are securely in place.
5. Burner is completely installed and ready to fire; consult equipment manufacturer instructions. Fuel lines are purged of air.
6. Combustion chamber and flues are clear of fuel and fuel vapor.
7. Power is connected to the system disconnect switch (master switch).
8. Lockout switch is reset (push in reset pushbutton) only if the 7895 is powered, see Fig. 1 and 2.
9. System is in the STANDBY condition. POWER LED is energized.
10. All limits and interlocks are reset.

Flame Signal Measurement (Fig. 18 and Table 5)

Table 5. Flame Signal.

Flame Detector	Acceptable Flame Signal Amplifier	Minimum Maximum Steady DC Voltage[a]	Expected DC Voltage
Flame Rod Photocell C7012A,C	R7847A,B[b]	1.25 Vdc	5.0 Vdc at the Keyboard Display Module
C7012E,F	R7847C[c]		
C7015A	R7848A,B[b]		OR
C7027A C7035A C7044A	R7849A,B[b]		
C7061	R7861A[d]		
C7076A,D	R7886A[e]		5.0 Vdc at a 1M ohm/volt meter

[a] This minimum or a stronger signal should easily be obtained if the detector is correctly installed and positioned to properly sense the flame. This voltage must be obtained before completing checkout.
[b] The flame amplifiers are AMPLI-CHECK® type.
[c] The flame signal amplifier circuitry is tested one-half second every five seconds during burner operation and shuts down the burner if the amplifier fails (all installations).
[d] Requires seperate stepdown power transformer. See Fig. 14.
[e] Use with RM7895A Only.

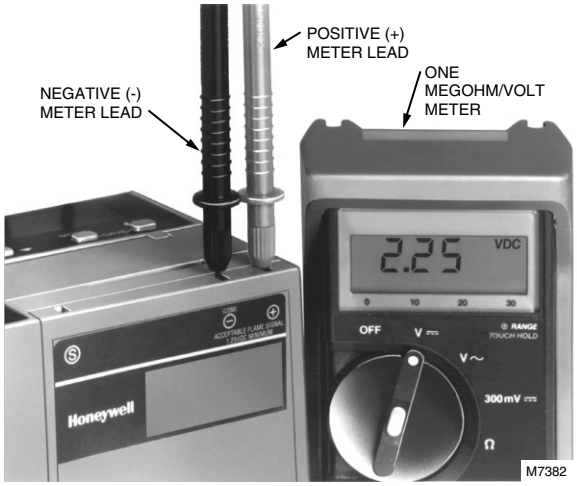

Fig. 18. Flame signal measurement.

Measure the flame signal at the appropriate times defined in the following checkout tests. Read the flame signal volts dc at the flame amplifier test jacks + and - (Com).

1. Use a 1M ohm/voltmeter with a 0 to 10 Vdc capability.
2. Set the 1M ohm/voltmeter to the 0 to 10 Vdc range.
3. Insert the positive (red) probe into the + jack of the flame amplifier. Insert the negative (black) probe into the - (Com) jack of the flame amplifier, see Fig. 19.
4. Allow a few seconds for the meter reading to stabilize.
5. If using AMPLI-CHECK® or shutter check amplifiers, read the average stable voltage, disregarding the peaks caused by the self-checking operation.
6. The meter reading must be as specified in Table 5 after all tests are completed and all adjustments are made.

As an option, the flame signal can be checked by using the optional Keyboard Display Module.

If the signal is unstable or less than the minimum ac-ceptable voltage, check the flame detector installation and circuitry.

1. Check the supply voltages at terminals 5 (L1) and L2 (N). Make sure the master switch is closed, connections are correct, and the power supply is of the correct voltage and frequency and is sinusoidal.
2. Check the detector wiring for defects including:
   - Incorrect connections.
   - Wrong type of wire.
   - Deteriorated wire.
   - Open circuits.
   - Short circuits.
   - Leakage paths caused by moisture, soot or accumulated dirt.
3. For a flame rod, make sure:
   - Ground area is large enough.
   - Flame rod is properly located in the flame.
   - Temperature at the flame rod insulator is no greater than 500° F (260° C).
4. For all optical detectors, clean the detector viewing window and inside of the sight pipe as applicable.
5. With the burner running, check the temperature at the detector. If it exceeds the detector maximum rated temperature:
   - Add a heat block to stop conducted heat traveling up the sight pipe.
   - Add a shield or screen to reflect radiated heat.
   - Add cooling (refer to sight pipe ventilation in the detector Instructions).
6. Make sure that the flame adjustment is not too lean.
7. Make sure that the detector is properly sighting the flame.
8. If necessary, resight or reposition the detector.

Initial Lightoff Check for Proved Pilot

Perform this check on all installations that use a pilot. It should immediately follow the preliminary inspection.

NOTE: Low fuel pressure limits, if used, could be open. If so, bypass them with jumpers during this check.

1. Open the master switch.
2. Make sure that the manual main fuel shutoff valve(s) is closed. Open the manual pilot shutoff valve. If the pilot takeoff is downstream from the manual main fuel shutoff valve(s), very slightly open the manual main valve to supply pilot gas flow. Make sure the main fuel is shutoff just upstream from the burner inlet, or disconnect power from the automatic main fuel valve(s).
3. Close the master switch and start the system with a *call for heat* by raising the set point of the operating controller, see Fig. 15. The primary sequence should start the ten-second INITIATE sequence.
4. Let the sequence advance through PREPURGE. Ignition spark should occur and the pilot should light. If the pilot ignites, the FLAME LED is energized. Proceed to step 7.
5. If the pilot flame is not established in four or ten seconds, safety shutdown occurs. Let the sequence complete its cycle. Consult the equipment operating manual for further information.
6. Push the reset pushbutton, and let the system recycle once. If the pilot still does not ignite, make the following ignition/pilot adjustments:
   a. Open the master switch and remove the EC7895 or RM7895 from the subbase.
   b. On the subbase, jumper terminal 5 to ignition terminals 8 or 10; refer to the appropriate wiring diagram to determine the proper terminal. Disconnect the leadwire to the pilot valve if it is connected to the same terminal.
   c. Close the master switch to energize only the ignition transformer.
   d. If the ignition spark is not strong and continuous, open the master switch and adjust the ignition electrode spark gap setting to the manufacturer recommendations.
   e. Make sure the ignition electrodes are clean.
   f. Close the master switch and observe the spark.
   g. After a continuous spark is obtained, open the master switch and add a jumper on the subbase from terminal 5 (L1) to the pilot terminal 8. Reconnect the leadwire from the pilot valve if it was disconnected in step b.
   h. Close the master switch to energize both the ignition transformer and the pilot valve.
   i. If the pilot does not ignite and if the ignition spark is still continuous, adjust the pressure regulator until a pilot is established.
   j. When the pilot ignites properly and stays ignited, open the master switch and remove the jumper(s) from terminals 5 through 8 or 5 through 10 of the subbase.
   k. Check for adequate bleeding of the fuel line.
   l. Reinstall the EC7895 or RM7895 on the subbase and close the master switch, then return to step 4.
7. When pilot ignites, measure the flame signal. If the pilot flame signal is unsteady or approaching the 1.25 Vdc minimum value, adjust the pilot flame size or detector sighting to provide a maximum and steady flame signal.
8. Recycle the system to recheck lightoff and pilot flame signal.
9. When the MAIN IGN period is displayed by the MAIN LED, make sure the automatic main fuel valve is open; then smoothly open the manual main fuel shutoff valve(s) and watch for main burner flame ignition. When the main burner flame is established, proceed to step 16.
10. If the main burner flame is not established within five seconds or the normal lightoff time specified by the equipment manufacturer, close the manual main fuel shut-off valve(s).
11. Recycle the system to recheck the lightoff and pilot flame signal.
12. Smoothly open the manual fuel shutoff valve(s) and try lightoff again. (The first reattempt may have been required to purge the lines and bring sufficient fuel to the burner.)
13. If the main burner flame is not established within five seconds or the normal lightoff time specified by the equipment manufacturer, close the manual main fuel shut-off valves(s). Check all burner adjustments.
14. If the main burner flame is not established after two attempts:
    a. Check for improper pilot size.
    b. Check for excess combustion air.
    c. Check for adequate fuel flow.
    d. Check for proper gas supply pressure.
    e. Check for proper valve operation.
    f. Check for proper pilot flame positioning.
15. Repeat steps 8 through 14 to establish the main burner flame; then proceed to step 16.
16. With the sequence in RUN, make burner adjustments for flame stability and BTU input rating.
17. Shut down the system by opening the burner switch or by lowering the set point of the operating controller. Make sure the main flame goes out. There may be a delay due to gas trapped between the valve(s) and the burner. Make sure all automatic fuel valve(s) close.
18. Restart the system by closing the burner switch and/or raising the set point of the operating controller. Observe that the pilot is established during PILOT IGN and the main burner flame is established during MAIN IGN within the normal lightoff time.
19. Measure the flame signal. Continue to check for the proper signal, see Table 5, through the RUN period.
20. Run the burner through another sequence, observing the flame signal for:
    a. Pilot flame alone (unless using direct spark ignition).
    b. Pilot and main flame together.
    c. Main flame alone (unless monitoring an intermittent pilot).

Also observe the time it takes to light the main flame. Ignition of main flame should be smooth.

21. Return the system to normal operation.
22. Make sure all readings are in the required ranges before proceeding.

NOTE: Upon completing these tests, open the master switch and remove all test jumpers from the subbase terminals, limits/controls or switches.

Initial Lightoff Check for Direct Spark Ignition

This check applies for gas and oil burners that do not use a pilot. It should immediately follow the preliminary in-spection. Refer to the appropriate sample block diagram of field wiring for the ignition transformer and fuel valve(s) hookup.

NOTE: Low fuel pressure limits, if used, could be open. If so, bypass them with jumpers during this check.

1. Open the master switch.
2. Complete the normal checkout of the fuel supply and equipment as recommended by the equipment manufacturer.
3. Close all manual main fuel shutoff valve(s). Check that the automatic fuel valve(s) are closed. Make sure fuel is not entering the combustion chamber.
4. Close the master switch and start the system with a *call for heat* by raising the set point of the operating controller, see Fig. 15. The primary sequence should start the ten-second INITIATE sequence.
5. Let the sequence advance through PREPURGE. Ignition spark should occur after the PREPURGE period. Listen for the click of the first stage fuel solenoid valve(s).
6. Let the program sequence complete its cycle.
7. Open the manual fuel shutoff valve(s).
8. Reset the Lockout Switch and recycle the primary sequence through PREPURGE.
9. Watch for the FLAME LED to help determine when the first stage burner flame is established. If it is established, proceed to step 15.
10. If the first stage burner flame is not established within four seconds, or within the normal lightoff time specified by the equipment manufacturer, close the manual fuel shutoff valve(s), and open the master switch.
11. Check all burner adjustments.
12. Wait about three minutes. Close the master switch, open the manual fuel shutoff valve(s), and try again to lightoff the burner. The first attempt may have been required to purge the lines and bring sufficient fuel to the burner.
13. If the first stage burner flame is not established with-in four seconds, or within the normal lightoff time specified by the equipment manufacturer, close the manual fuel shutoff valve(s) and open the master switch.
14. If necessary, repeat steps 8 through 13 to establish the first stage burner flame. Then proceed to step 15.
15. When the first stage burner flame is established, the sequence will advance to RUN. Make burner adjustments for flame stability and input rating. If a second stage is used, proceed to step 18.
16. Shut down the system by opening the burner switch or by lowering the set point of the operating controller. Make sure the burner flame goes out and make sure all automatic fuel valve(s) close.
17. If used, remove the bypass jumpers from the low fuel pressure limit and subbase.
18. If a second stage is used, make sure the automatic second stage fuel valve(s) has opened and check the light-off as follows. Otherwise proceed to step 19:
    a. Open the manual second stage fuel valve(s).
    b. Restart the system by raising the set point of the operating controller.
    c. When the first stage burner flame is established, watch for the automatic second stage fuel valve(s) to open. Observe that the second stage lights off properly.
    d. Make burner adjustments for flame stability and input rating.
    e. Shut down the system by lowering the set point of the operating controller. Make sure the burner flame goes out and all automatic fuel valve(s) close.
19. Restart the system by closing the burner switch and/or raising the set point of the operating controller. Observe that the burner flame is established during PILOT IGN, within the normal lightoff time specified by the equipment manufacturer.
20. Measure the flame signal. Continue to check for the proper signal, see Table 5, through the RUN period. Any pulsating or unsteady readings require further attention.
21. Make sure all readings are in the required ranges be-fore proceeding.

NOTE: Upon completing these tests, open the master switch and remove all test jumpers from the subbase terminals, limits/control or switches.

22. Return the system to normal operation.

Pilot Turndown Test (All Installations using a Pilot)

Perform this check on all installations that use a pilot. The purpose of this test is to verify that the main burner can be lit by the smallest pilot flame that will hold in the flame amplifier and energize the FLAME LED. Clean the flame detector(s) to make sure that it detects the smallest acceptable pilot flame. If using AMPLI-CHECK® or Self-Checking Amplifier and 20K ohm/voltmeter, the flame signal will fluctuate every time the amplifier does a self-check or a shutter check.

NOTE: Low fuel pressure limits, if used, could be open. If so, bypass them with jumpers during this test.

1. Open the master switch.
2. Close the manual main fuel shutoff valve(s).
3. Connect a manometer (or pressure gauge) to measure pilot gas pressure during the turndown test.
4. Open the manual pilot shutoff valve(s).
5. Close the master switch and start the system with a *call for heat*. Raise the set point of the operating controller. The primary sequence should start and PREPURGE should begin.
6. INTERMITTENT PILOT MODELS—After the sequence has entered the normal burner run period, turn down pilot gas pressure very slowly, reading the manometer (or gauge) as the pressure drops. Stop immediately when the FLAME LED goes out. Note the pressure at this point.
    a. If the Flame Failure Action jumper *is not clipped*, allow the EC7895 or RM7895A to recycle through PREPURGE. If the Flame Failure Action jumper *is clipped*, push the reset pushbutton and allow the EC7895 or RM7895A to recycle through PREPURGE.
    b. As the control attempts to relight the pilot, turn the pilot gas pressure back up slowly until the FLAME LED comes on. This step must be completed within 4 or 10 seconds, depending on the selected PFEP, or lockout will occur.

c. Turn the pilot back down slightly but not enough to cause the FLAME LED to go out. (Keep the pilot gas pressure just above the reading noted in step 6 above.)

NOTE: Step d requires two people, one to open the manual main fuel valve(s) and one to watch for ignition.

d. With the sequence in the normal burner run mode, make sure the automatic main fuel valve(s) is open. Smoothly open the manual main fuel shutoff valve(s) and watch for main burner lightoff.
e. If the main flame is not established within five seconds or the normal lightoff period specified by the burner manufacturer, close the manual main fuel shutoff valve(s) and open the master switch. Return to step 6. If the burner flame is established in the normal lightoff period, proceed to step 16.

7. When the main burner lights reliably with the pilot at turndown, disconnect the manometer (or pressure gauge) and turn the pilot gas flow up to that recommended by the equipment manufacturer.
8. If used, remove the bypass jumpers from the subbase terminals, limits/controls or switches.
9. Run the system through another cycle to check for normal operation.
10. Return the system to normal operation.

Ignition Interference Test (All Flame Rods)

Test to be sure that a false signal from a spark ignition system is not superimposed on the flame signal.

Ignition interference can subtract from (decrease) or add to (increase) the flame signal. If it decreases the flame signal enough, it causes a safety shutdown. If it increases the flame signal, it could cause the FLAME LED to come on when the true flame signal is below the minimum accep-table value.

Start the burner and measure the flame signal with both ignition and pilot (or main burner) on, and then with only the pilot (or main burner) on. Any significant difference (greater than .5 Vdc) indicates ignition interference.

To Eliminate Ignition Interference

1. Be sure there is enough ground area.
2. Be sure the ignition electrode and the flame rod are on opposite sides of the ground area.
3. Check for correct spacing on the ignition electrode:
   a. 6,000V systems - 1/16 to 3/32 in. (1.6 to 2.4 mm).
   b. 10,000V systems - 1/8 in. (3.2 mm).
4. Make sure the leadwires from the flame rod and ignition electrode are not too close together.
5. Replace any deteriorated leadwires.
6. If the problem cannot be eliminated, the system may have to be changed to an ultraviolet or infrared flame detection system.

Hot Refractory Saturation Test (All Infrared Detectors)

Test to be sure that radiation from hot refractory does not mask the flickering radiation of the flame itself.

Start the burner and monitor the flame signal during the warmup period. A decrease in signal strength as the refractory heats up indicates hot refractory saturation. If saturation is extreme, the flame signal will drop below 1.25 Vdc and the system will shut down as though a flame failure has occurred.

If hot refractory saturation occurs, the condition must be corrected. Add an orifice plate in front of the cell to restrict the viewing area, try to lengthen the sight pipe or decrease the pipe size (diameter). Continue adjustments until hot refractory saturation is eliminated.

Hot Refractory Hold-In Test (Rectifying Photocell or All Infrared Detectors)

Test to be sure hot refractory is not delaying the flame detection system response to a flameout. This condition can delay response to flame failure and also can prevent a system restart as long as hot refractory is detected.

To check rectifying photocells for hot refractory hold-in, operate the burner until the refractory reaches its maximum temperature. Then terminate the firing cycle by lowering the set point of the operating controller or setting the Fuel Selector Switch to OFF. Do not open the master switch. Visually observe when the burner flame or FLAME LED goes out. If this takes longer than .8 or 3 seconds (depending on the FFRT of the amplifier), the photocell is sensing hot refractory. This condition must be corrected as described in the last paragraph of this test.

Infrared (lead sulfide) detectors can respond to infrared rays emitted by a hot refractory, even when the refractory has visibly stopped glowing. Infrared radiation from a hot refractory is steady, but radiation from a flame has a flickering characteristic. The infrared detection system responds only to flickering infrared radiation; it can reject a steady signal from hot refractory. The refractory steady signal can be made to fluctuate if it is reflected, bent or blocked by smoke or fuel mist within the combustion chamber. Be careful when applying an infrared system to verify its response to flame only.

To check infrared (lead sulfide) detectors for hot refractory hold-in, operate the burner until the refractory reaches its maximum temperature. If the installation has a multi-fuel burner, burn the heaviest fuel that is most likely to reflect, bend or obscure the hot refractory steady infrared radiation. When the maximum refractory temperature is reached, close all manual fuel shutoff valve(s) or open the electrical circuits of all automatic fuel valve(s). Visually observe when the burner flame or FLAME LED goes out. If this takes more than three seconds, the infrared detector is sensing hot refractory. Immediately terminate the firing cycle. Lower the set point to the operating controller, or set the Fuel Selector Switch to OFF. Do not open the master switch.

NOTE: Some burners continue to purge oil lines between the valve(s) and nozzle(s) even though the fuel valve(s) is closed. Terminating the firing cycle (instead of opening the master switch) allows purging of the combustion chamber. This reduces fuel vapor buildup in the combustion chamber caused by oil line purging.

If the detector is sensing hot refractory, the condition must be corrected. Add an orifice plate in front of the cell to restrict the viewing area of the detector. If this does not correct the problem, resight the detector at a cooler, more distant part of the combustion chamber. While resighting the detector, be aware that it must also properly sight the flame. When using infrared detector, try lengthening the sight pipe or decreasing the pipe size (diameter). For details, refer to the detector Instructions and the equipment Operating Manual. Continue adjustments until hot refractory hold-in is eliminated.

Ultraviolet Sensor, Ignition Spark Response Test (All Ultraviolet Detectors)

Test to be sure that the ignition spark is not actuating the FLAME LED:

1. Close the pilot and main burner manual fuel shutoff valve(s).
2. Start the burner and run through the PILOT IGN period. Ignition spark should occur, but the flame signal should not be more than 0.5 Vdc and the FLAME LED should not turn on.
3. If the flame signal is higher than 0.5 Vdc and the FLAME LED does come on, consult the equipment Operating Manual and resight the detector further out from the spark, or away from possible reflection. It may be necessary to construct a barrier to block the ignition spark from the detector view. Continue adjustments until the flame signal due to ignition spark is less than 0.5 Vdc.

NOTE: The Honeywell Q624A Solid State Spark Generator prevents detection of ignition spark when properly applied with the C7027, C7035 or C7044 Minipeeper Ultraviolet Flame Detectors. The Q624A is only for use with gas pilots.

Response To Other Ultraviolet Sources

Under certain conditions, an ultraviolet detector responds to other ultraviolet sources as if it is sensing a flame. These ultraviolet sources include artificial light, such as incandescent or fluorescent bulbs, mercury and sodium vapor lamps or daylight. To check for proper detector operation, check the Flame Failure Response Time (FFRT) and conduct Safety Shutdown tests under all operating conditions.

Flame Signal With Hot Combustion Chamber (All Installations)

After all initial start-up tests and burner adjustments are completed, operate the burner until the combustion chamber is at the maximum expected temperature. Observe the equipment manufacturer warmup instructions. Recycle the burner under these hot conditions and measure the flame signal. Check the pilot alone, the main burner flame alone, and both together (unless monitoring only the pilot flame when using an intermittent pilot, or only the main burner flame when using DSI).

Check the FFRT of the Flame Amplifier. Lower the set point of the operating controller and observe the time it takes for the burner flame to go out. This should be within .8 or 3 seconds maximum depending on the amplifier selected.

If the flame signal is too low or unsteady, check the flame detector temperature. Relocate the detector if the temperature is too high. If necessary, realign the sighting to obtain the proper signal and response time. If the response time is still too slow, replace the Plug-in Flame Signal Amplifier. If the detector is relocated or resighted, or the amplifier is replaced, repeat all required Checkout tests.

Safety Shutdown Tests (All Installations)

Perform these tests at the end of Checkout after all other tests are complete. If used, the external alarm should turn on. Press the RM7895 reset pushbutton to restart the system.

1. Close the Airflow Interlock during PREPURGE, PILOT IGN, MAIN IGN or RUN period.
   a. Safety shutdown occurs if the Airflow ILK Switch Failure configuration jumper (JR3) is clipped.
2. Detect flame 40 seconds after entry to STANDBY. Detect flame 30 seconds during measured PREPURGE time.
   a. Simulate a flame to cause the flame signal voltage level to be at least 1.25 Vdc for 40 seconds after entry to STANDBY and also simulate a flame signal for 30 seconds during PREPURGE.
   b. Safety shutdown occurs.
3. Failure to ignite pilot.
   a. Close the pilot and main fuel manual shutoff valve(s).
   b. Depress the reset push button.
   c. Start the system.
   d. Automatic pilot valve(s) should be energized but the pilot cannot ignite.
   e. Safety shutdown occurs.
4. Failure to ignite main.
   a. Open the manual pilot valve(s); leave the main fuel manual shutoff valve(s) closed.
   b. Depress the reset pushbutton.
   c. Start the system.
   d. Pilot should ignite and the flame signal should be at least 1.25 Vdc but the main burner cannot light.
   e. Close the manual pilot valve(s).
   f. Flame signal should drop below 1.25 Vdc within .8 or 3 seconds (depending on the FFRT of the amplifier) after the pilot goes out.
   g. Safety shutdown occurs.
5. Loss of flame during RUN.
   a. Open the main fuel manual shutoff valve(s). The manual pilot shutoff valve(s) must also be opened.
   b. Depress the reset push button.
   c. Start the system. Startup should be normal and the main burner should light normally.
   d. After the sequence is in the normal RUN period for at least ten seconds with the main burner firing, close the manual main and pilot fuel shutoff valve(s) to extinguish the main burner flame.
   e. The flame signal should drop below 1.25 Vdc within .8 or 3 seconds (depending on the FFRT of the amplifier) after the main flame goes out.
   f. Safety shutdown occurs.

IMPORTANT

1. *If the EC7895 or RM7895 fails to shut down on any of these tests, take corrective action (refer to Troubleshooting, EC7895 or RM7895 diagnostics and return to the beginning of all Checkout tests).*
2. *When all Checkout tests are complete, reset all switches to original states.*

TROUBLESHOOTING

EC7895 or RM7895 System Diagnostics

Troubleshooting control system equipment failures is easier with the 7895 self-diagnostics and first-out annunciation. In addition to an isolated spst alarm relay (audible annunciation), the 7895 provides visual annunciation by displaying the ALARM LED.

Self-diagnostics of the 7895 enable it to detect and annunciate both external and internal system problems. Ex-ternal faults such as interlock failures, flame failures and false flame signals are annunciated by the 7895, which energizes the ALARM LED or by using the optional Keyboard Display Module. The 7800 SERIES provides a System Annunciation Diagnostics and Troubleshooting manual, form 65-0118.

The 7895 provides diagnostic information to aid the service mechanic to obtain information when troubleshooting the system, see Table 6.

The optional Keyboard Display Module displays sequence status messages indicating: STANDBY, PRE-PURGE, PILOT IGN, MAIN IGN and RUN. The selectable messages also provide visual indication, current status and historical status of the equipment such as: Flame Signal, Total Cycles, Total Hours, Fault History, and Diagnostic Information. With this information most problems can be diagnosed without extensive trial and error testing. Information available in the Diagnostic Information file includes: Device Type, Device Suffix, Software Revision, Manufacturing Code, Flame Amplifier Type, Flame Failure Response Time, Selectable Jumper Configuration Status, and Terminal Status.

Diagnostic Information Index

The EC7895 or RM7895 with the optional Keyboard Display Module can monitor input/output terminals and can display the status of the terminal at the VFD (example; Pilot Valve T8 ON<), see S7800A Keyboard Display Module Specifications. A complete terminal description and number are provided. The display will show the actual status of the terminal. If voltage is detected at the terminal, ON is displayed; but if no voltage is detected at the terminal, OFF is displayed.

Historical Information Index

The EC7895 or RM7895 has nonvolatile memory that allows the Relay Module to retain Historical Information for the six most recent lockouts. Each of the six lockout files retains the cycle when the fault occurred, the hour of operation when the fault occurred, and the fault message and burner status when the fault occurred. The Historical Information can be viewed by the optional S7800A Keyboard Display Module Specifications.

SERVICE NOTE: A Lockout condition or restart of a EC7895 or RM7895 can be accomplished by pressing the reset push-button on the EC7895 or RM7895, or by pressing a remote reset pushbutton wired through an optional Keyboard Display Module, DATA CONTROLBUS MODULE™, Extension Cable Assembly or Remote Reset Module. A power-up reset causes an electrical reset of the EC7895 or RM7895 but does not reset a lockout condition.

SERVICE NOTE: Remove the access slot covers on the sides of the Q7800A,B to check voltages.

⚠ CAUTION

Reinstall access slot covers on the Q7800A,B Subbase after performing voltage checks.

SERVICE NOTE: Maximum ambient operating temperature of a C7012E,F Series 1 through 6 is reduced to 125° F because of the duty cycle operation of the 7895 Relay Module.

Table 6. Sequence And Status Hold Information.

NOTE: **Normal sequences** are in **bold type**, while abnormal sequences are not in bold type.

Sequence	Status
INITIATE	The LED indicates the burner status, POWER, which is a stabilization period for the RM7895 to check for any fluctuations in AC line voltage inputs or control input on power-up or during normal operation. The timing of the INITIATE period is ten seconds before entering STANDBY.
If the EC7895 or RM7895 is in a HOLD status, the following conditions could exist:	
INITIATE HOLD: (AC Frequency/Noise)	The LED indicates the burner status, POWER, and that it is waiting for excess line noise to clear up. The burner sequence does not advance into STANDBY until the excess line noise, which prevents sufficient reading of the line voltage inputs, ceases or a line frequency error is corrected.
INITIATE HOLD: (AC Line Dropout)	The LED indicates the burner status, POWER, and that AC Line power has momentarily dropped out. The burner sequence does not advance into STANDBY until the AC line voltage stabilizes throughout the INITIATE sequence.
INITIATE HOLD: (AC Frequency)	The LED indicates the burner status, POWER, and that line frequency is faster than the expected value. The burner sequence does not advance into STANDBY until the line frequency returns to the proper value.
INITIATE HOLD: (Low Line Voltage)	The LED indicates the burner status, POWER, and that low line voltage has occurred. The burner sequence does not advance into STANDBY until the line voltage is at a sufficient level for proper operating parameters.
STANDBY	The LED indicates the burner status, POWER. The burner can be placed in STANDBY by opening the burner switch or if the operating controller indicates its set point is satisfied. If a demand is present for burner operation, the burner sequence does not advance from STANDBY to PURGE until the recycle limits close.
If the EC7895 or RM7895 is in a HOLD status, the following conditions could exist:	
STANDBY HOLD: F/G (Flame Detected)	The LEDs indicate the burner status, POWER and FLAME, and that a flame is detected. A demand is present for burner operation. The burner sequence does not advance to PREPURGE because a flame is detected as being present. The sequence does not advance to PREPURGE until the flame signal clears. If the flame signal does not clear within 40 seconds, the RM7895 locks out.
STANDBY HOLD: T7 (Airflow Interlock)	The LED indicates the burner status, POWER, and that the Air-flow Interlock is closed. A demand is present for burner operation and the burner sequence does not advance to PREPURGE until the Airflow Interlock proves open.
PURGE	The LED indicates the burner status, POWER, and that it is the period of time before ignition during which time the blower motor is running. The timing of the PURGE period is selectable.

Table 6. Sequence And Status Hold Information. ***(Continued)***

NOTE: **Normal sequences** are in **bold type**, while abnormal sequences are not in bold type.

Sequence	Status
If the EC7895 or RM7895 is in a HOLD condition, the following conditions could exist:	
PURGE HOLD: F/G (Flame Detected)	The LEDs indicate the burner status, POWER and FLAME, and that a flame is detected. The burner sequence does not advance through PREPURGE because a flame is detected as being present. The sequence holds, waiting for the flame signal to clear. If the time exceeds 30 seconds, the EC7895 or RM7895 locks out.
PURGE HOLD: T7 (Airflow Interlock)	The LED indicates the burner status, POWER, and that the Air-flow Interlock is not closed. The sequence does not advance to ignition until the Airflow Interlock proves closed. If this time exceeds a 30 second HOLD, the EC7895 or RM7895 locks out.
PILOT IGN	The LEDs indicate the burner status, POWER, PILOT and FLAME, which is the period of time the EC7895 or RM7895 permits the pilot valve to be open and the pilot flame to be established.
If the EC7895 or RM7895 is in a HOLD status, the following condition could exist:	
MAIN IGN	The LEDs indicate the burner status, POWER, PILOT, FLAME and MAIN, which is the period of time the EC7895 or RM7895 permits the main valve to be open and the main flame to be established.
RUN	The LEDs indicate the burner status, POWER, PILOT, FLAME and MAIN, which is the period of time after the Ignition Trials and before the operating controller set point is reached. During this time, the burner is firing under the control of the operating controller (EC7895 or RM7895A).
RUN	The LEDs indicate the burner status, POWER, FLAME and MAIN, which is the period of time after the Ignition Trials and before the operating controller set point is reached.
RESET/ALARM TEST	The LED indicates the burner status, POWER and ALARM. This condition indicates the reset push button is pressed. If it is held for more than four seconds, the alarm output is energized. The alarm output will be de-energized after the reset pushbutton is released.