Промэлектроника
sales@prom-elec.com

Honeywell

MICRO SWITCH™ Specialty Large Basic Switches

BS | DT | MN | MT | TB Series

004956
Issue 3

Datasheet

DESCRIPTION

MICRO SWITCH™ premium specialty large snap-action switches are designed for repeatability and enhanced life. These series of precision switches feature application-specific characteristics. From double-break circuitry to handling power duty electrical loads, MICRO SWITCH™ premium large snap-action switches are suitable for a variety of applications.

BS Series switches offer alternatives to solve challenging switch applications. These unique solutions can provide adjustable operating characteristics, sequential outputs, or impact actuation (no external plunger).

DT Series switches consist of two independent single-pole double throw (SPDT) contacts in one housing controlled by an integral common actuator. The DPDT contact configuration provides a contact for the control circuit and a different contact for the signal or auxiliary circuit.

MT Series magnetic blow-out switches are designed to switch high-capacity (125 Vdc/250 Vdc) electrical loads. An integral magnet around the contact gap deflects the arc away from the contacts, extending switch life. Vents between the cover and housing allow the hot gas to escape.

Easy to gang mount, MN Series single pole double throw double-break switches are for use with limit or control mechanisms on machine tools, presses, or other equipment.

MICRO SWITCH™ TB Series miniature single pole double throw double break switches offer a means of controlling circuits similar to the MN Series switches except in a smaller package.

DIFFERENTIATION

- Double pole switch options in small package for increased application flexibility
- Double break switch options in compact design requires less space on equipment
- -55 °C [-67 °F] low temperature capability for harsh outdoor or cold room applications

FEATURES

- Double pole design in small package allows for control of two independent circuits (DT Series and MN Series)
- Switch design with adjustable operating characteristics (BS Series)
- Higher dc current capacity at 125 Vdc and 250 Vdc with magnetic blow-out contact design (MT Series)
- Compact switch package with double-break contacts (MN Series and TB Series)
- Variety of integral plunger and lever options or auxiliary plunger and lever options
- Most switches mount on the common 25,4 mm [1.00 in] centers
- Metal or plastic enclosures available to prevent contact with switch terminals
- Select switch series with a temperature range of -55 °C to 85 °C [-67 °F to 185 °F]
- Agency certifications with CSA and UL for select catalog listings
- MIL-PRF-8805 for select DT Series catalog listings

POTENTIAL APPLICATIONS

- Temperature and pressure switch assemblies
- Motor and solenoid dc control circuits
- Welder control circuits
- Switch element in machine tools
- Switch element in manually operated devices

VALUE TO CUSTOMERS

- Can control two independent circuits in a small package (DT Series and TB Series)
- Unique switch design with adjustable operating characteristics (BS Series)
- Magnetic blow-out contact design permits control of dc circuits in a small package size (MT Series)
- Double break switch design adds element of redundancy within small switch package (MN series and TB Series)

PORTFOLIO

The five different series of premium specialty large basic switches (BS Series, DT Series, MN Series, MT Series, and TB Series) complements the four different families of premium large basic switch series (BA Series, BE Series, BM Series, and BZ Series).

ПРОМЭЛЕКТРОНИКА / sales@prom-elec.com

MICRO SWITCH™ Specialty Large Basic Switches BS | DT | MN | MT | TB Series

Table 1. Specifications

Series	BS Series	DT Series	MT Series	MN Series	TB Series
	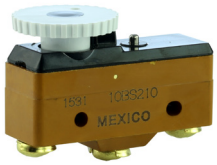				
Differentiator	adjustable switch characteristics or special circuitry	same size as the MICRO SWITCH™ BZ Series, but double pole double throw (DPDT)	designed for power duty dc loads	double-break contacts	smaller double-break package
Use	pressure or temperature switch assemblies	design permits several different wiring configurations	control circuits to switch high capacity (125 Vdc and 250 Vdc) systems	limit or control mechanisms	limit or control mechanisms
Ampere rating	Up to 20 A	10 A	10 A	15 A	10 A
Circuitry	SPDT, SPNC	DPDT	SPDT	SPDT DB	SPDT-DB, DPDT-DB
Operating force	Up to 9,73 N [35 oz]	3,34 N to 5,56 N [12.0 oz to 20.0 oz] max.	3,34 N to 5,00 N [12 oz to 18 oz] max.	1,95 N to 3,1 N [7 oz to 11 oz]	1,95 N to 3,89 N [7 oz to 14 oz] max.
Termination	solder, screw	screw	solder, screw	screw	solder, screw
Actuator	impact actuation (no plunger), pin plunger (SST), overtravel plunger (SST)	pin plunger, straight plunger, straight lever, reversed lever, roller lever	pin plunger, straight lever, roller lever, flexible leaf, flexible leaf with roller	pin plunger	pin plunger
Voltage	up to 480 Vac	125 Vac, 250 Vac, 28 Vdc	125 Vdc, 250 Vdc	480 Vac	250 Vac
Agency approvals	UL, CSA (most models)	UL recognized; CSA certified, MIL-PRF-8805	UL recognized	UL recognized; CSA certified	UL recognized, CSA certified
Operating temperature	-55 °C to 85 °C [-67 °F to 185 °F]	-55 °C to 85 °C [-67 °F to 185 °F]	-55 °C to 82 °C [-67 °F to 180 °F]	-55 °C to 85 °C [-67 °F to 185 °F]	-55 °C to 125 °C [-67 °F to 257 °F]
Contact material	silver	silver	silver	silver	silver
Housing	phenolic	general purpose phenolic	arc resistant melamine	general purpose phenolic	general purpose phenolic
Expected mechanical life	Up to 20,000,000 operations at 95 % survival	3,000,000 operations	100,000 operations	10,000,000 cycles	7,000,000 operations

O.F. • Operating force
R.F. • Release force
P.T. • Pretravel
O.T. • Overtravel
D.T. • Differential travel
O.P. • Operating position

Table 2. BS Series Order Guide

	Catalog Listing	Description	Electrical Data and Code	O.F. N [oz]	R.F. min. N [oz]	P.T. max. mm [in]	O.T. min. mm [in]	D.T. mm [in]	O.P. max. mm [in]
	4BS3	Impact actuated (no plunger)	–	0,39 [1.41], 5 to 8 G force	0,20 [0.71]	–	–	–	–
	6BS1-B	SPST-NO sequential	10 A E	12,5 [45]	2,78 [10]	–	–	–	–
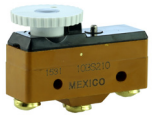	**10BS210**	Adjustable characteristics	20 A F	3,06 to 5,56 [11 to 20]	2,78 [10]	0,25 [0.010]	Max. set-ting, 0,18 [0.007]	16,3 [0.64]	16,3 [0.64]

Table 3. 6BS1-B Electrical Ratings and UL Code

Code	Circuitry	Electrical Data and UL Code
E	SPST-NO sequential	10 A, 125 Vac to 250 Vac
		1/3 HP, 125 Vac; 3/4 HP, 250 Vac
		1/2 A, 125 Vdc; 1/4 A, 250 Vdc
		UL Code L115

Figure 1. 6BS1-B Sequence of Operation

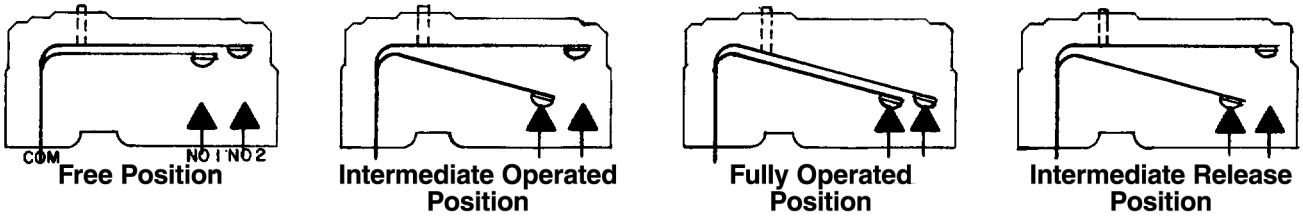

Table 4. 10BS210 Electrical Ratings and UL Code

Code	Circuitry	Electrical Data and UL Code
F	SPDT	20 A, 125 Vac, 250 Vac, 480 Vac
		3/4 HP, 125 Vac; 1½ HP, 250 Vac
		UL Code L17

O.F. • Operating force
R.F. • Release force
P.T. • Pretravel
O.T. • Overtravel
D.T. • Differential travel
O.P. • Operating position

Table 5. DT Series Order Guide

	Catalog Listing	Description	Electrical Data and Code	O.F. N [oz]	R.F. min. N [oz]	P.T. max. mm [in]	O.T. min. mm [in]	D.T. mm [in]	O.P.* mm [in]
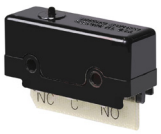	**DT-2R-A7 MS25008-1**	Pin plunger, MIL-PRF-8805 applications	10 A A	3,35 to 5,56 [12 to 20]	0,56 [2]	1,91 [0.075]	0,13 [0.005]	1,02 to 1,52 [0.040 to 0.060]	15,6 ±0,38 [0.615 ±0.015]
	DT-2RS1-A7	Straight plunger	10 A A	3,35 to 5,56 [12 to 20]	0,28 [1]	1,91 [0.075]	0,51 [0.020]	1,02 to 1,52 [0.040 to 0.060]	28,2 ±0,38 [1.11 ±0.015]
	DT-2RV3-A7	Straight lever, reversed lever position	10 A A	1,11 to 1,95 [4 to 7]	0,14 [0.5]	6,86 [0.270]	0,25 [0.010]	2,92 to 4,83 [0.115 to 0.190]	18,3 [0.719]
	DT-2RV-A7	Straight lever	10 A A	0,97 to 1,67 [3.5 to 6]	0,28 [1]	25,4 [1]	1,57 [0.062]	12,4 to 19,2 [0.490 to 0.755]	21,8 [0.859]
	DT-2RV216-A7	Roller lever (centered SST roller)	10 A A	11,1 [2.5]	1,11 [4]	1,02 [0.040]	0,13 [0.005]	0,51 to 0,76 [0.020 to 0.030]	31 [1.219]
	DT-2RV22-A7	26,2 mm [1.03 in] roller lever (SST roller)	10 A A	2,5 to 3,89 [9 to 14]	0,83 [3]	9,9 [0.39]	0,79 [0.031]	4,95 to 7,75 [0.195 to 0.305]	30,2 ±0,38 [1.188 ±0.015]
	DT-2RV212-A7	30,2 mm [1.19 in] reversed roller lever (SST roller)	10 A A	2,5 to 4,17 [9 to 15]	0,42 [1.5]	3,3 [0.130]	0,13 [0.005]	1,27 to 2,16 [0.050 to 0.085]	29,4 [1.156]
	DT-2RV23-A7	48,22 [1.9 in] reversed roller lever (SST roller)	10 A A	1,53 to 2,64 [5.5 to 9.5]	0,21 [0.75]	4,45 [0.175]	0,25 [0.010]	2,16 to 3,43 [0.085 to 0.135]	29,4 [1.156]
	DT-2RV2-A7	48,3 mm [1.90 in] roller lever (SST roller)	10 A A	1,25 to 2,09 [4.5 to 7.5]	0,42 [1.5]	18,27 [0.72]	1,19 [0.047]	9,27 to 14,4 [0.365 to 0.565]	31,8 [1.250]

* Except where stated ±0,76 mm [±0.030 in]

Table 6. DT Series Electrical Ratings and UL Code

Code	Circuitry	Electrical Data and UL Code
A	DPDT	10 A, 125 Vac or 250 Vac
		0.3 A, 125 Vdc
		0.15 A, 250 Vdc
		UL Code L59

O.F. • Operating force
R.F. • Release force
P.T. • Pretravel
O.T. • Overtravel
D.T. • Differential travel
O.P. • Operating position

Table 7. MT Series Order Guide

	Catalog Listing	Description	Electrical Data and Code	O.F. N [oz]	R.F. min. N [oz]	P.T. max. mm [in]	O.T. min. mm [in]	D.T. mm [in]	O.P. max.* mm [in]
	MT-4R-A28	Pin plunger	10 A B	3,34 to 5,0 [12 to 18]	1,39 [5]	1,02 [0.04]	0,13 [0.005]	0,1 to 0,18 [0.004 to 0.007]	15,9 ±0,38 [0.625 ±0.015]
	MT-4RV-A28	Straight lever	10 A B	0,56 [2]	0,14 [0.5]	12,7 [0.5]	1,19 [0.047]	2,16 [0.085]	19,1 [0.75]
	MT-4RV2-A28	48,3 mm [1.90 in] lever with SST roller	10 A B	0,76 [2.75]	0,07 [0.25]	8,89 [0.35]	0,79 [0.031]	1,65 [0.065]	30,2 [1.188]
	MT-4RV22-A28	26,2 mm [1.03 in] lever with SST roller	10 A B	1,25 [4.5]	0,28 [1]	5,08 [0.20]	0,38 [0.015]	0,89 [0.035]	31,3 [1.234]
	MT-4RL-A28	49,5 mm [1.95 in] flexible leaf	10 A B	3,34 [12]	0,28 [1]	6,35 [0.25]	1,52 [0.060] max.	–	19,1 [0.75]
	MT-4RL2-A28	46,2 mm [1.82 in] flexible leaf with SST roller	10 A B	3,34 [12]	0,28 [1]	6,35 [0.25]	1,52 [0.060] max.	–	30,2 [1.188]

* ±0,76 mm [±0.030 in]

Table 8. MT Series Electrical Ratings and UL Code

Code	Circuitry	Electrical Data and UL Code
B	SPDT	Rating established with switch non-polarized 10 A, 125 Vac or Vdc; 1/4 HP, 125 Vac or Vdc UL Code L168
		Non-polarized: 10 A res. or 1/4 HP, 125 Vdc; 3 A max. res. 250 Vdc
		Polarized*: 10 A res. or 1/2 HP, 125 Vdc; 3 A max. res., 250 Vdc
*To polarize, connect negative side of line to common terminal. To achieve the same effect, mount switch with brass screws, using a non-magnetic barrier (at least 1/4 N thick) between the switch and mounting surface		

Table 9. MN Series Order Guide

	Catalog Listing	Description	Electrical Data and Code	O.F. N [oz]	R.F. min. N [oz]	P.T. max. mm [in]	O.T. min. mm [in]	D.T. mm [in]	O.P.* max. mm [in]
	3MN1	General purpose	15 A C	3,34 to 5,56 [12 to 20]	1,67 [6]	1,52 [0.060]	2,03 [0.080]	0,38 to 0,63 [0.015 to 0.025]	2,16 [0.085]
	3MN6	Lower force	15 A C	1,95 to 3,1 [7 to 11]	1,11 [4]	1,52 [0.060]	2,03 [0.080]	0,38 to 0,63 [0.015 to 0.025]	2,16 [0.085]

* ±0,38 mm [±0.015 in]

Table 10. MN Series Electrical Ratings and UL Code

Code	Circuitry	Electrical Data and UL File 22779
C	Two-circuit, double break 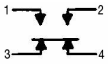	15 A, 120 Vac, 240 Vac, 480 Vac, or 600 Vac
		1/2 HP, 120 Vac; 1 HP, 240 Vac
		0.8 A, 115 Vdc
		0.4 A, 230 Vdc

Table 11. TB Series Order Guide

	Catalog Listing	Description	Electrical Data and Code	O.F. N [oz]	R.F. min. N [oz]	P.T. max. mm [in]	O.T. min. mm [in]	D.T. mm [in]	O.P.* max. mm [in]
	1TB1-1	Two-circuit, doublebreak, end screw terminals	10 A D	1,95 to 3,61 [7 to 13]	1,11 [4]	1,52 [0.060]	0,25 [0.010]	0,25 to 0,64 [0.010 to 0.025]	11,7 [0.460]
	1TB1-2	Two-circuit, doublebreak, end solder terminals	10 A D	1,95 to 3,61 [7 to 13]	1,11 [4]	1,52 [0.060]	0,25 [0.010]	0,25 to 0,64 [0.010 to 0.025]	11,7 [0.460]
	1TB1-3	Two-circuit, doublebreak, front solder terminals	10 A D	1,95 to 3,61 [7 to 13]	1,11 [4]	1,52 [0.060]	0,25 [0.010]	0,25 to 0,64 [0.010 to 0.025]	11,7 [0.460]
	41TB5-3	Four-circuit, doublebreak, front solder terminals	10 A D	5,56 to 10 [20 to 36]	2,22 [8]	1,78 [0.070]	0,25 [0.010]	0,64 to 1,14 [0.025 to 0.045]	4,70 [0.185]

* ±0,38 mm [±0.015 in]

Table 12. TB Series Electrical Ratings and UL Code

Code	Circuitry	Electrical Data
D	Two-circuit, double break 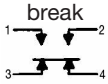 Four-circuit, double break 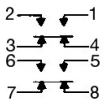	10 A, 125 Vac or 250 Vac; 1/2 HP, 125 Vac UL Code L25

Table 13. BS Series • Standard Actuator Options, Terminals, and Dimensions mm [in]

4BS3

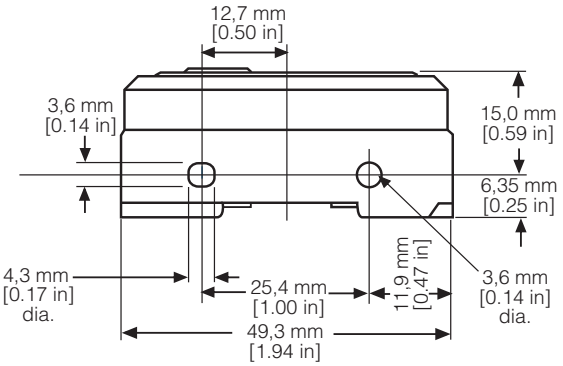

6BS1-B (sequential)

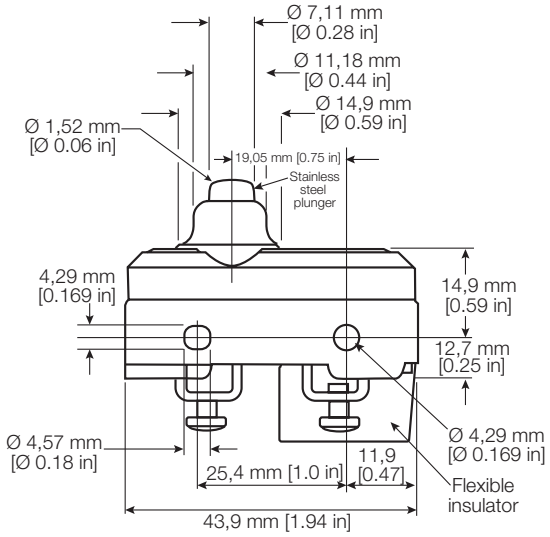

10BS210 (adjustable characteristics)

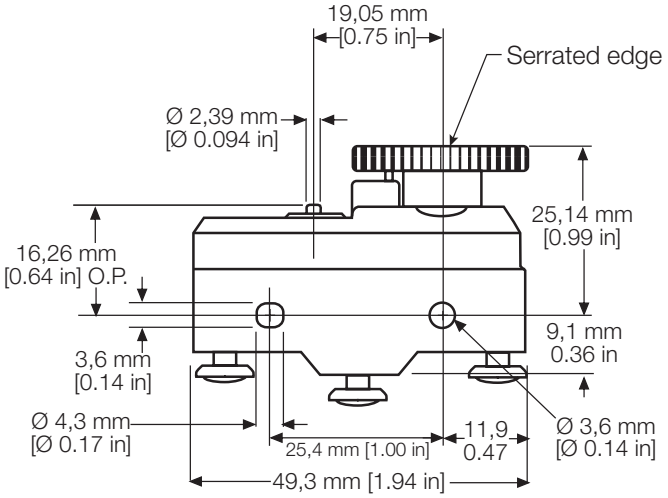

Table 14. DT Series • Standard Actuator Options, Screw Terminals, and Dimensions mm [in]

DT Series: Pin plunger	DT Series: Straight lever	DT Series: Straight lever (reversed)
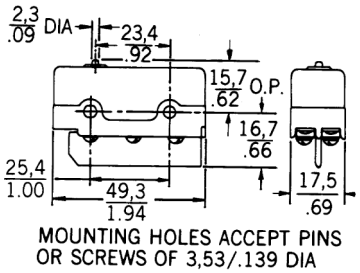	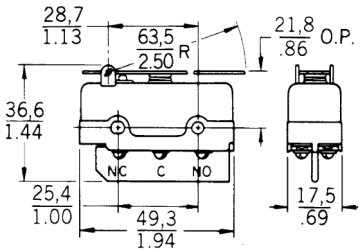	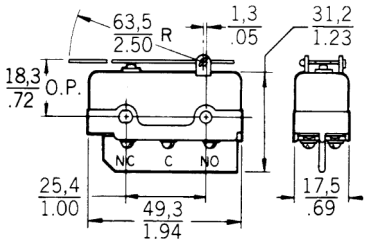
DT Series: Roller lever	**DT Series: Roller lever**	**DT Series: Roller lever (reversed)**
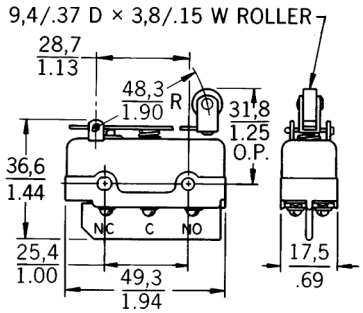	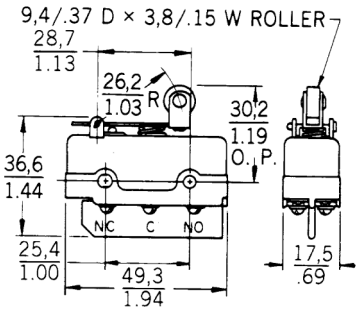	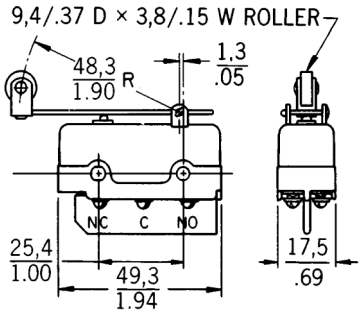
DT Series: Roller lever (reversed)	**DT Series: Roller lever (reversed)**	**DT Series: Straight plunger**
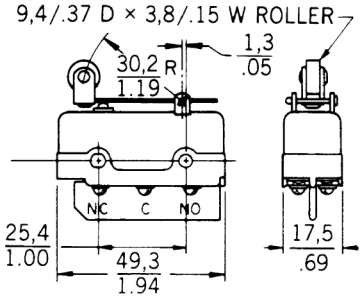	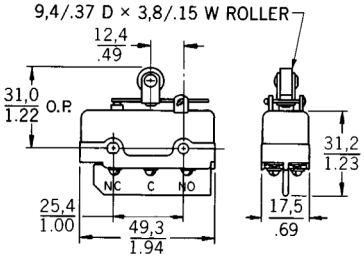	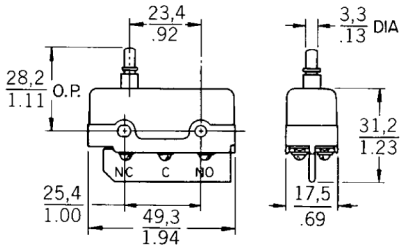

Table 15. MT Series • Standard Actuator Options, Terminals, and Dimensions mm [in]

MT Series: Pin plunger	MT Series: Straight lever	MT Series: Roller lever
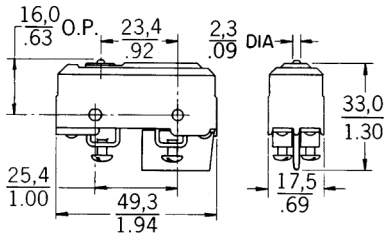	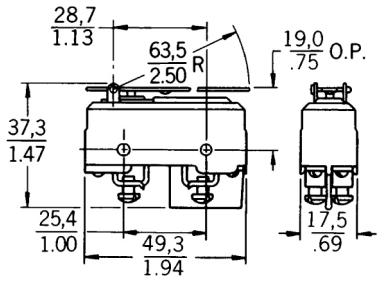	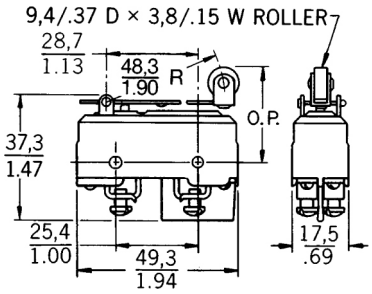
MT Series: Flexible leaf lever	**MT Series: Flexible leaf roller lever**	
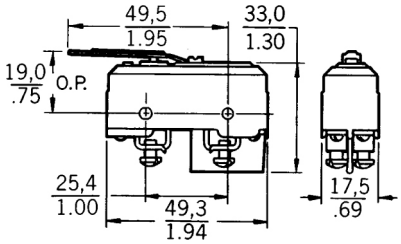	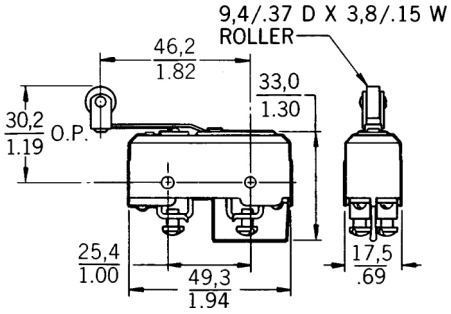	

Table 16. MN Series • Standard Actuator Options, Terminals, and Dimensions mm [in]

MN Series: Pin plunger
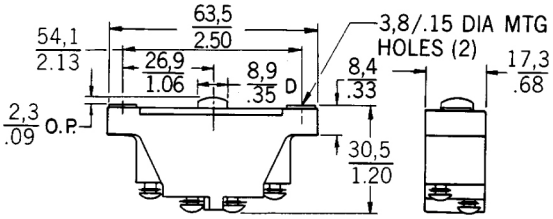

Table 17. TB Series • Standard Actuator Options, Terminals, and Dimensions mm [in]

TB Series: Pin plunger, screw terminals	TB Series: Pin plunger, solder terminals
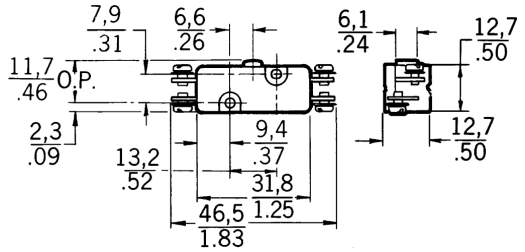	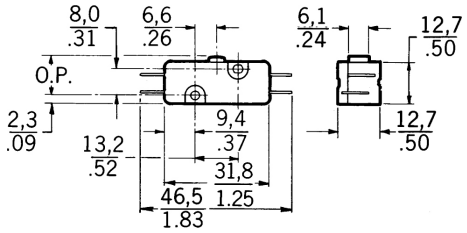
TB Series: Pin plunger, solder terminals (front)	**TB Series: Pin plunger, solder terminals (front), four circuit**
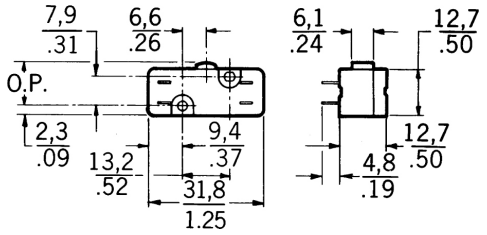	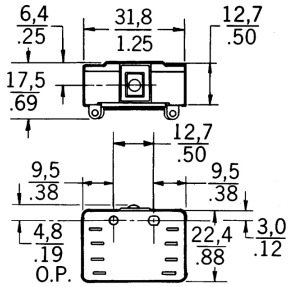

Table 18. Large Snap-Action Switch Accessories • Brackets

Description	8MA1	8MA2	17MA1-B
Description	Adjustable mounting bracket with adjustment slot on left	Adjustable mounting bracket with adjustment slot on right	Conversion mounting bracket
Housing material	Steel	Steel	Corrosion-resistant metal
Measurements	60,2 mm W x 21,3 mm H x 7,4 mm D [2.37 in W x 0.84 in H x 0.29 in D]		66,8 mm W x 19,0 mm D [2.63 in W x 0.75 in D]
Features	sturdy plated steel construction; fast, easy screwdriver adjustment; can be used with all standard basic switches		converts standard basic switches from side to top mount; corrosion resistant; snaps into switch mounting holes without tools

Table 19. Large Snap-Action Switch Accessories • Zinc Die-Cast Enclosures

Description	3PA1	3PA28	3PA2
Description	mounted from either side through 3,55 mm [0.140 in] dia. holes on 25,4 mm [1.0 in] centers; conduit/hub 0.5 – 14 NPT internal thread	mounted from either side through 3,55 mm [0.140 in] dia. holes on 25,4 mm [1.0 in] centers. 1/2-14 NPSM internal thread conduit hub	switch secured in enclosure; two 4,37 mm [0.172 in] dia. holes in flange accept #8 screws for mounting on 41,3 mm [1.625 in] centers; conduit/hub 0.5 – 14 NPT internal thread
Housing material	die-cast zinc enclosure (side mount)	die-cast zinc enclosure (side mount)	die-cast zinc enclosure (flange mount)
Measurements	74,8 mm W x 42,9 mm H x 25,4 mm D [2.95 in W x 1.69 in H x 1.00 in D]	74,8 mm W x 42,9 mm H x 25,4 mm D [2.95 in W x 1.69 in H x 1.00 in D]	74,8 mm W x 42,9 mm H x 25,4 mm D [2.95 in W x 1.69 in H x 1.00 in D]
Sealing/Features	NEMA 1; IP40; protects the switch from physical abuse and personnel from contact with exposed terminals		

Table 20. Large Snap-Action Switch Accessories • Plastic Terminal Enclosures

Description	5PA1	5PA2	5PA3
Description	Plastic terminal enclosure used with solder terminal switches	Plastic terminal enclosure used with screw terminal switches	Plastic terminal enclosure used with either solder or screw terminal switches with auxiliary actuators assembled
Housing material	plastic	plastic	plastic
Measurements	52,8 mm W x 16,1 mm H [2.08 in W x 0.64 in H]	52,8 mm W x 20,2 mm H x 21,0 mm D [2.08 in W x 0.80 in H x 0.83 in D]	52,8 mm W x 20,2 mm H x 21,0 mm D [2.08 in W x 0.80 in H x 0.83 in D]
Sealing/Features	NEMA 1, IP40; easy to use; screw & solder terminal versions; protect personnel from contact with exposed terminals		

Table 21. Auxiliary Actuator Order Guide

	Catalog Listing	Description	For Use With	Overtravel min. mm [in]	Operating Position* mm [in]	Free Position mm [in]
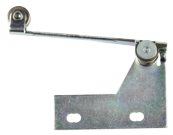	**JR**	Roller lever for "S" plunger type DT switches only. Permits cam operation	DT	11,1 mm [0.437 in]	44,45 mm ±3,18 mm [1.75 in ±0.125 in]	–
	ADD3721R	Adjustable roller lever. Tang on top of actuator can be bent to adjust O.P. and F.P.	DT, MT	9,53 mm [0.375 in] approx.	39,6 mm [1.562 in] approx.	46,03 mm [1.812 in]
	MCD2711	Straight plunger. Panel mount	DT, MT	3,58 mm [0.141 in]	27,79 mm [1.094 in]	30,18 mm [1.188 in]
	MCD2711H	Sealed straight plunger. Panel mount. Elastomer boot seal keeps out liquid splash and dirt. Furnished unassembled.	DT, MT	3,58 mm [0.141 in]	27,79 mm [1.094 in]	30,18 mm [1.188 in]
	MD3211Q	Roller plunger. Panel mount. Roller parallel to long axis of the switch	DT, MT	3,18 mm [0.125 in]	35,7 mm [1.406 in]	37,69 mm [1.484 in]
	MD3211Q1	Cross roller plunger. Panel mount. Roller perpendicular to long axis of the switch	DT, MT	3,18 mm [0.125 in]	35,7 mm [1.406 in]	37,69 mm [1.484 in]
	MCD7711	High overtravel plunger. Panel mount	DT, MT	18,26 mm [0.719 in]	69,1 mm [2.719 in]	71,42 mm [2.812 in]

* Except where stated ±1,14 mm [±0.045 in]
NOTE: All actuators are for use with pin plunger types only, except catalog listing JR.

OPERATING CHARACTERISTICS

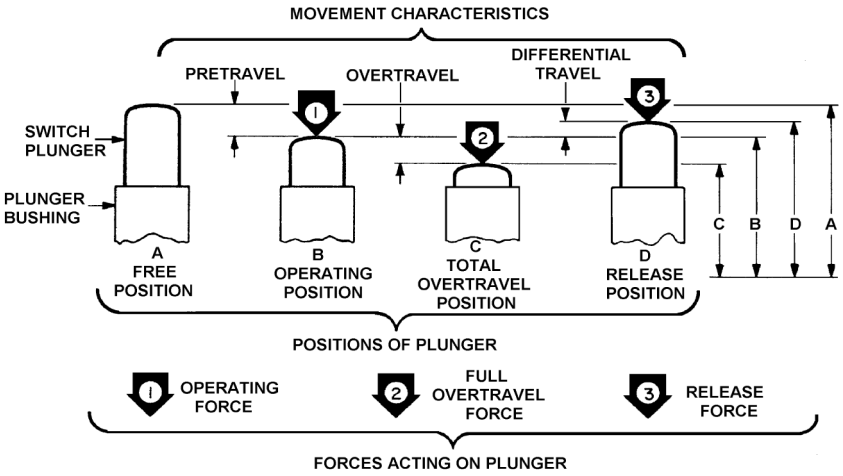

Table 22. Operating Characteristics Definitions

Characteristic	Description
Differential Travel-DT	Plunger or actuator travel from point where contacts “snap-over” to point where they “snap-back.”
Free Position-FP	Position of switch plunger or actuator when no external force is applied.
Full Overtravel Force	Force required to attain full overtravel of actuator.
Operating Position-OP	Position of switch plunger or actuator at which point contacts snap from normal to operated position. With flexible or adjustable actuators, the operating position is measured from the end of the lever or its maximum length. Location of operating position measurement shown on mounting dimension drawings.
Operating Force-OF	Amount of force applied to switch plunger or actuator to cause the contact “snap-over.” Note in the case of adjustable actuators, the force is measured from the maximum length position of the lever.
Overtravel-OT	Plunger or actuator travel safely available beyond operating position.
Pretravel-PT	Distance or angle traveled in moving plunger or actuator from free position to operating position.
Release Force-RF	Amount of force still applied to switch plunger or actuator at the moment contacts snap from operated position to non-operated position.
Total Travel	Distance from actuator free position to overtravel limit position.