Honeywell

Honeywell BZ-2RW82

MICRO SWITCH Premium Large Basic Switches

BZ | BA | BM | BE | 6AS Series

Datasheet

DESCRIPTION

Accurate, reliable, and repeatable, Honeywell MICRO SWITCH BZ/BA/VBM/BE Premium Series switches are designed and manufactured for a wide variety of applications with over 75 years of experience. The internal flat-spring design is ideal for applications requiring precision switch characteristics and long life. These precision switches are available with differential travel less than 0,0254 mm [0.001 in].

Catalog listings within these Series of switches are available to control a wide range of electrical loads from logic level to power duty switching coupled with a wide variety of integral actuators. A variety of electrical connections are available to match the application requirements. These Series of switches fit the standard 25,4 mm [1.00 in] mounting centers. Select catalog listings are available with a threaded plunger bushing panel mounting. Auxiliary actuators are available to increase the flexibility of the Premium Series switches as well as metal or plastic enclosures where required. These switches can be supplied factory gang–mounted (two switches) with an integral actuator for double pole applications or other circuit applications.

Most of these switch Series have agency certifications for global applications. In addition, select catalog listings are qualified to MIL-PRF-8805 for military applications.

VALUE TO CUSTOMERS

- MICRO SWITCH legacy and expertise with over 75 years of engineering and application experience
- Worldwide availability through Honeywell's global network
- Dependable performance; up to 20 million mechanical cycles

FEATURES

- Switch styles; momentary plunger, manual reset plunger, make-before-break contacts, sequential contacts, double break contacts, split contacts
- Standard package size 49,3 L x 17,5 W x 24,1 H mm [1.94 x 0.69 x 0.93 in]
- Mounts on standard 25,4 mm centers [1.00 in] or threaded plunger bushing
- Wide selection of integral actuators including: pin plunger, roller plunger, overtravel plunger, integral leaf with or without roller, plain lever, roller lever, one-way roller lever
- Fine silver contacts, silver-alloy contacts, or gold-alloy contacts
- Electrical connection options; solder terminals, screw terminals, or quick-connect terminals
- Optional sealed plunger and cover
- Auxiliary actuators available
- Optional metal or plastic enclosures available where required
- Gang-mount assemblies (tandem assemblies) with single integral lever
- Global certification: UL, CSA, CE, and ENEC for most catalog listings
- Select switches are qualified to MIL-PFR-8805

POTENTIAL APPLICATIONS

- Building controls and equipment
- Doors and lifts
- Semi-trucks and trailers
- Valves
- Industrial timers
- Communication systems
- Foot switches
- Commercial and industrial food service equipment
- Agriculture irrigation equipment
- Medical instrumentation

DIFFERENTIATION

- Standard temperature range of -55 °C to 85 °C [-67 °F to 185 °F], option to 204 °C [400 °F]
- Current carrying capability of up to 25 A
- Stainless steel snap spring available for demanding environments
- Selection of special circuitries; make-before-break contacts, sequential contacts, double break contacts, single-pulse output

PORTFOLIO

In addition to the large basic switches, Honeywell offers V-Basic switches, miniature, miniature watertight, sub-miniature, and special application switches.

ПРОМЭЛЕКТРОНИКА / sales@prom-elec.com

MICRO SWITCH Premium Large Basic Switches

Table 1. Specifications

Characteristic	BZ Series	WZ Series	YZ Series	BA Series	WA Series	YA Series	BM Series	BE Series
Ampere rating	15 A			20 A			22 A	25 A
Circuitry	SPDT	SPNC	SPNO	SPDT	SPNC	SPNO	SPDT	SPDT
Operating force	1.0 oz to 28 oz							
Termination	quick connect, solder, screw							
Actuator	pin plunger, overtravel plunger, straight, roller, flexible leaf roller, flexible leaf							
Voltage	125 Vac, 250 Vac, 125 Vdc, 250 Vdc							
Agency approvals	UL, CSA, ENEC, CE (varies by specific model)							
Operating temperature	-55 °C to 85 °C [-67 °F to 185 °F]							
Contacts	silver, silver cadmium oxide, gold alloy							
Housing	general purpose phenolic							
Sealing	Environment sealing option available (options for IP64 Sealing)							
Dielectric strength	2000 V between each terminal and ground							
Contact resistance	15 m Ohm max. (initial)							
Insulation resistance	100,000 M Ohm min.							
Vibration	1,5 mm peak-to-peak amplitude, frequency 10 Hz to 55 Hz, for two continuous hours							
Expected mechanical life	up to 20,000,000 cycles at 95% survival							
Expected electrical service life	100K operations at rated load							
Rated frequency	50 Hz/60 Hz							

ELECTRICAL DATA AND UL CODES

Table 2. UL Electrical Ratings

Code	Circuitry	Electrical data and UL codes
A	SPDT	15 A, 125, 250, or 480 Vac; 1/8 HP, 125 Vac; 1/4 HP, 250 Vac; 1/2 A, 125 Vdc; 1/4 amp, 250 Vdc; UL Code L96
B	SPDT	5 A, 125, 250, or 480 Vac; 1/2 A, 125 Vdc; 1/4 amp, 250 Vdc; UL Code L35
C	SPDT	10 A, 125, 250, or 480 Vac; UL Code L8
D	SPDT	15 A, 125, 250, or 480 Vac; 1/8 HP, 125 Vac; 1/4 HP, 250 Vac; UL Code L103
E	SPDT	15 A, 125, 250, or 480 Vac; 1/4 HP, 125 Vac, 1/2 HP, 250 Vac; 1/2 A, 125 Vdc; 1/4 amp, 250 Vdc; UL Code L67
F	SPDT	22 A, 125, 250, or 480 Vac; 1/2 HP, 125 Vac, 1 HP, 250 Vac; UL Code L161
G	SPDT	20 A, 125, 250, or 480 Vac; 10 A, 125 Vac "L" (tungsten lamp load); 1 HP, 125 Vac; 2 HP, 250 Vac; 1/2 A, 125 Vdc; 1/4 A, 250 Vdc; UL Code L23
H	SPDT	Motor control - 25 A, 125, 250, or 480 Vac; 1 HP, 125 Vac; 2 HP, 250 Vac; Pilot duty—750 VA, 125, 250, or 277 Vac
I	SPDT	10 A, 125, 250, or 480 Vac; 1/8 HP, 125 Vac; 1/4 HP, 250 Vac; UL Code L95
P	SPDT	1 A, 125 Vac; UL Code L22
T	Two-circuit, double break	Motor Control 15 A, 120, 240, 480, or 600 Vac; 1/2 HP, 120 Vac; 1 HP, 240 Vac; 0.8 amp, 115 Vdc; 0.4 amp, 230 Vdc.
W	SPST	20 A, 125, 250, or 277 Vac; 3/4 HP, 125 Vac; 1/2 HP, 250 Vac; UL Code L178B
X	SPDT	15 A, 125, 250, or 480 Vac; 2 A, 600 Vac; 1/8 HP, 125 Vac; 1/4 HP, 250 Vac; 1/2 amp, 125 Vdc; 1/4 amp, 250 Vdc; UL Code L74

GENERAL SWITCH IDENTIFICATION

The first letter in the catalog listing designates:

B = Single pole, double throw
W = Single pole, normally closed
Y = Single pole, normally open

The second letter in the catalog listing designates:

Z = Standard, 15 A version
M = 22 A version
A = Standard, 20 A version
E = 25 A version

MOUNTING DIMENSIONS

Mounting dimensions are included in this datasheet. They are shown in English and metric equivalents. These dimensions are for reference only. Engineering drawings may be accessed via the Honeywell web site: **sensing.honeywell.com**.

Mounting holes for Types BZ, BM, BA, BE, and 6AS switches accept pins or screws of 3,53 mm [0.139 in] diameter.

RECOMMENDED TORQUE

Mounting screws. . . . . 0,39 Nm [3 in-lb]*
Terminal screws. . . . . 0,45 Nm [4 in-lb]
Panel mount bushing . 0,45 Nm to 0,68 Nm [4 in-lb to 6 in-lb]

*Note: Tightening mounting screws above 0,3 Nm [3 in-lb] changes operating characteristics and increases the possibility of cracking the case.

UL/CSA

Honeywell basic switches are Component Recognized by Underwriters' Laboratories, Inc. and certified by Canadian Standards Association. The BA, BZ, and BM line is covered as Special Use Switches to UL Standard1054; the BE line is covered as an Industrial Product to UL Standard 508. Agency File References are:

- BA Series: UL File E12252, CSA File 4442
- BM Series: UL File E12252, CSA File 4442
- BZ Series: UL File E12252, CSA File 4442
- BE-Series: UL File E22779, CSA File 4442

MICRO SWITCH Premium Large Basic Switches

O.F. • Operating force
R.F. • Release force
P.T. • Pretravel
O.T. • Overtravel
D.T. • Differential travel
O.P. • Operating position

ORDER GUIDE BY ASCENDING ELECTRICAL CAPABILITY

	Catalog Listing	Recommended For	Electrical Data and UL Codes	O.F. N [oz]	R.F. min. N [oz]	P.T. max. mm [in]	O.T. min. mm [in]	D.T. mm [in]	O.P.*** mm [in]
BZ/BA type	BZ-2R72-A2**	Applications requiring gold alloy contacts	1 A P	2,5 to 3,61 [9 to 13]	1,11 [4]	0,38 [0.015]	0,13 [0.005]	0,01 to 0,05 [0.0004 to 0.0020]	15,88 [0.625]
	BZ-2R725551-A2	Gold alloy contacts; Dustproof and splash resistant seal	1 A P	2,22 to 4,17 [8 to 15]	1,11 [4]	–	0,13 [0.005]	0,01 to 0,06 [0.0004 to 0.0025]	15,88 [0.625]
	BZ-2R244-A2	Operating in temp. to 204 °C [400 °F] for 100 hours	5 A B	2,5 to 3,61 [9 to 13]	1,11 [4]	0,38 [0.015]	0,13 [0.005]	0,01 to 0,05 [0.0004 to 0.0020]	15,88 [0.625]
	BZ-R21-A2	Lower force	10 A C	1,11 [4]	0,7 [2.5]	0,30 [0.012]	0,13 [0.005]	0,005 to 0,013 [0.0002 to 0.0005]	15,88 [0.625]
	BZ-2R-A2	Most applications SPDT	15 A A	2,5 to 3,61 [9 to 13]	1,11 [4]	0,38 [0.015]	0,13 [0.005]	0,01 to 0,05 [0.0004 to 0.0020]	15,88 [0.625]
	WZ-2R-A2	SPST (normally closed)	15 A A	2,5 to 3,61 [9 to 13]	1,11 [4]	0,38 [0.015]	0,13 [0.005]	0,01 to 0,05 [0.0004 to 0.0020]	15,88 [0.625]
	YZ-2R-A2	SPST (normally open)	15 A A	2,5 to 3,61 [9 to 13]	1,11 [4]	0,38 [0.015]	0,13 [0.005]	0,01 to 0,05 [0.0004 to 0.0020]	15,88 [0.625]
Sealed type	BZ-R-A2	Less differential travel	15 A D	1,95 to 2.5 [7 to 9]	1,11 [4]	0,30 [0.012]	0,13 [0.005]	0,005 to 0,008 [0.0002 to 0.0003]	15,88 [0.625]
	BZ-R19-A2	Best repeatability	15 A D	1,95 to 3,34 [7 to 12]	1,11 [4]	0,30 [0.012]	0,13 to 0,2 [0.005 to 0.008]	0,005 to 0,02 [0.0002 to 0.0008]	16,26 [0.640]
	BZ-2R24-A2	Operating in temp. to 121 °C [250 °F]	15 A A	2,5 to 3,61 [9 to 13]	1,11 [4]	0,38 [0.015]	0,13 [0.005]	0,01 to 0,05 [0.0004 to 0.0020]	15,88 [0.625]
	BZ-2RT04 (M8805/1-004)	MIL-PRF-8805 application requirements	15 A A	2,5 to 3,61 [9 to 13]	1,67 [6]	0,38 [0.015]	0,13 [0.005]	0,01 to 0,05 [0.0004 to 0.0020]	15,88 [0.625]
	BZ-2R05-A2	Stability under varying humidity	15 A A	2,5 to 3,61 [9 to 13]	1,11 [4]	0,38 [0.015]	0,13 [0.005]	0,01 to 0,05 [0.0004 to 0.0020]	15,88 [0.625]
	BZ-2R5551-A2	Dustproof and splash resistant seal	15 A A	2,5 to 4,17 [9 to 15]	1,11 [4]	–	0,13 [0.005]	0,01 to 0,06 [0.0004 to 0.0025]	15,88 [0.625]
	BZ-2R55-A2-S	Sealed construction; stainless steel internal snapspring	15 A A	2,5 to 4,17 [9 to 15]	1,11 [4]	–	0,13 [0.005]	0,01 to 0,06 [0.0004 to 0.0025]	15,88 [0.625]
BA/BE type	BA-2R-A2	Up to 20 ampere load	20 A G	3,89 to 6,12 [14 to 22]	2,78 [10]	1,27 [0.050]	0,25 [0.10]	0,05 to 0,19 [0.0020 to 0.0075]	16,26 [0.640]
	BA-2R24-A2	Operating in temp. to 121 °C [250 °F]	20 A G	3,89 to 6,12 [14 to 22]	2,78 [10]	1,27 [0.050]	0,25 [0.10]	0,05 to 0,19 [0.0020 to 0.0075]	16,26 [0.640]
	BM-1R-A2	Up to 22 ampere load	22 A F	1,95 to 2,78 [7 to 10]	1,11 [4]	0,38 [0.015]	0,13 [0.005]	0,013 to 0,025 [0.0005 to 0.0010]	15,88 [0.625]
	BE-2R-A4	Up to 25 ampere load; #8 screw terminals	25 A H	3,89 to 6,12 [14 to 22]	2,78 [10]	1,27 [0.050]	0,25 [0.10]	0,05 to 0,19 [0.0020 to 0.0075]	16,26 [0.640]
Manual Reset	BZ-RX	Manual reset, solder terminals	15 A E	1,95 to 2,5 [7 to 9] 0,56 to 2,78* [2 to 10]	–	0,30 [0.012] –	0,13 [0.005] 0,38* 0.015]	–	15,88 [0.625]
	WA-1RX-A4	Manual reset SPST-NC; #8 screw terminals	20 A W	5,56 [20] 6,95 [25]*	–	–	0,25 [0.010] –	0,20 [0.008] –	16,26 [0.64] 27,9*[1.10]

* Reset characteristics.
** -A2 is supplied with #6 terminal screws.
*** Except where stated, ±0,38 mm [±0.015 in].

MICRO SWITCH Premium Large Basic Switches

O.F. • Operating force
R.F. • Release force
P.T. • Pretravel
O.T. • Overtravel
D.T. • Differential travel
O.P. • Operating position

OVERTRAVEL PLUNGER ORDER GUIDE

	Catalog Listing	Recommended For	Electrical Data and UL Codes	O.F. N [oz]	R.F. min. N [oz]	P.T. max. mm [in]	O.T. min. mm [in]	D.T. mm [in]	O.P.*** mm [in]
	BZ-2RD72-A2	Applications requiring gold alloy contacts	1 A P	2,5 to 3,61 [9 to 13]	1,11 [4]	0,38 [0.015]	1,52 [0.060]	0,01 to 0,05 [0.0004 to 0.0020]	21,21 [0.835]
	BZ-2RD-A2	Added overtravel. For manual operation and slow 20° (max) cam rise	15 A A	2,5 to 3,61 [9 to 13]	1,11 [4]	0,38 [0.015]	1,52 [0.060]	0,01 to 0,05 [0.0004 to 0.0020]	21,21 [0.835]
	BZ-2RD24-A2	Operating in temperature to 121 °C [250 °F]	15 A A	2,5 to 3,61 [9 to 13]	1,11 [4]	0,38 [0.015]	1,52 [0.060]	0,01 to 0,05 [0.0004 to 0.0020]	21,21 [0.835]
	BM-1RD-A2	Up to 22 ampere load	22 A F	1,95 to 2,78 [7 to 10]	1,11 [4]	0,38 [0.015]	1,52 [0.060]	0,013 to 0,025 [0.0005 to 0.0010]	21,21 [0.835]
	BZ-2RDS725551-A2	Applications requiring gold alloy contacts plus dustproof and splash resistant seal	1 A P	3,61 to 5,28 [13 to 19]	1,11 [4]	–	1,52 [0.060]	0,01 to 0,063 [0.0004 to 0.0025]	28,20 [1.110]
	BZ-2RDS5551-A2	Dustproof and splash resistant seal	15 A A	3,61 to 5,28 [13 to 19]	1,11 [4]	–	1,52 [0.060]	0,01 to 0,063 [0.0004 to 0.0025]	28,20 [1.110]
	BA-2RB-A2	Up to 20 ampere load	20 A G	3,89 to 6,12 [14 to 22]	2,78 [10]	1,27 [0.050]	2,39 [0.094]	0,05 to 0,019 [0.0020 to 0.0075]	26,20 [1.03]
	BE-2RB-A4	Up to 25 ampere load; #8 screw terminals	25 A H	3,89 to 6,12 [14 to 22]	2,78 [10]	1,27 [0.050]	2,39 [0.094]	0,05 to 0,019 [0.0020 to 0.0075]	26,20 [1.03]
	BZ-2RS72-A2	Applications requiring gold alloy contacts	1 A P	2,5 to 3,61 [9 to 13]	1,11 [4]	0,38 [0.015]	1,52 [0.060]	0,01 to 0,05 [0.0004 to 0.0020]	28,20 [1.110]
	BZ-2RS-A2	Added overtravel. For in-line operation and with JR aux. actuators	15 A A	2,5 to 3,61 [9 to 13]	1,11 [4]	0,38 [0.015]	1,52 [0.060]	0,01 to 0,063 [0.0004 to 0.0025]	28,20 [1.110]
	BZ-2RS24-A2	Operating in temperature to 121 °C [250 °F]	15 A A	2,5 to 3,61 [9 to 13]	1,11 [4]	0,38 [0.015]	1,52 [0.060]	0,01 to 0,05 [0.0004 to 0.0020]	28,20 [1.110]
	BZ-2RST04 (M8805/1-012)	MIL-PRF-8805 application requirements	15 A A	2,5 to 3,61 [9 to 13]	1,67 [6]	0,38 [0.015]	1,52 [0.060]	0,01 to 0,05 [0.0004 to 0.0020]	28,20 [1.110]
	BZ-RSX	Manual reset; solder terminals	15 A E	1,95 to 2,64 [7 to 9]	–	0,30 [0.012]	0,65 [0.025]	–	2,79 [1.11]
	BM-1RS-A2	Up to 22 ampere load	22 A F	1,95 to 2,78 [7 to 10]	1,11 [4]	0,38 [0.015]	1,52 [0.060]	0,013 to 0,025 [0.0005 to 0.0010]	28,20 [1.110]
	BZ-2RS7225551-A2	Applications requiring gold alloy contacts plus dustproof and splash resistant seal	1 A P	2,5 to 4,17 [9 to 15]	1,11 [4]	–	1,52 [0.060]	0,01 to 0,063 [0.0004 to 0.0025]	28,20 [1.110]
	BZ-2RS5551-A2	Dustproof and splash resistant seal	15 A A	2,5 to 4,17 [9 to 15]	1,11 [4]	–	1,52 [0.060]	0,01 to 0,063 [0.0004 to 0.0025]	28,20 [1.110]

* ±51 mm [±0.020 in].
*** Except where stated, ±0,38 mm [±0.015 in].

MICRO SWITCH Premium Large Basic Switches

O.F. • Operating force
R.F. • Release force
P.T. • Pretravel
O.T. • Overtravel
D.T. • Differential travel
O.P. • Operating position

OVERTRAVEL PLUNGER ORDER GUIDE

	Catalog Listing	Recommended For	Electrical Data and UL Codes	O.F. N [oz]	R.F. min. N [oz]	P.T. max. mm [in]	O.T. min. mm [in]	D.T. mm [in]	O.P.*** mm [in]
	BZ-2RQ-A2	Added overtravel. For manual in-line operation and for slow 30° (max) rise cams	15 A A	2,5 to 3,61 [9 to 13]	1,11 [4]	0,38 [0.015]	5,56 [0.219]	0,01 to 0,05 [0.0004 to 0.0020]	38,10 ±0,51 [1.50 ±0.02]
	BZ-2RQ24-A2	Operating in temperature to 121 °C [250 °F]	15 A A	2,5 to 3,61 [9 to 13]	1,11 [4]	0,38 [0.015]	5,56 [0.219]	0,01 to 0,05 [0.0004 to 0.0020]	38,10 ±0,51 [1.50 ±0.02]
	BZ-2RQ172-A2	Applications requiring gold alloy contacts	1 A P	2,5 to 3,61 [9 to 13]	1,11 [4]	0,38 [0.015]	5,56 [0.219]	0,01 to 0,05 [0.0004 to 0.0020]	21,82 [0.859]
	BZ-2RQ1-A2	BZ-2RQ-A2 type applications with panel mount	15 A A	2,5 to 3,61 [9 to 13]	1,11 [4]	0,38 [0.015]	5,56 [0.219]	0,01 to 0,05 [0.0004 to 0.0020]	21,82 [0.859]
	BZ-2RQ1T04 (M8805/1-020)	MIL-PRF-8805 application requirements	15 A A	2,5 to 3,61 [9 to 13]	1,67 [6]	0,38 [0.015]	5,56 [0.219]	0,01 to 0,05 [0.0004 to 0.0020]	21,82 [0.859]
	BZ-2RQ124-A2	Operating in temperature to 121 °C [250 °F]	15 A A	2,5 to 3,61 [9 to 13]	1,11 [4]	0,38 [0.015]	5,56 [0.219]	0,01 to 0,05 [0.0004 to 0.0020]	21,82 [0.859]
	BZ-2RN702	Furnished with unassembled seal boot	15 A X	2,5 to 3,61 [9 to 13]	1,11 [4]	0,38 [0.015]	3,18 [0.125]	0,01 to 0,05 [0.0004 to 0.0020]	48,4 ±0,50 1.906 [±0.02]
	BZ-RQ1X	Manual reset; Solder terminals	15 A E	1,67 to 2,64 [6 to 9.5]	–	0,30 [0.012]	5,56 [0.219]	–	23,42 ±1,14 [0.922 ±0.045] 7,14* [0.281*]
	BA-2RQ1-A2	Up to 20 ampere load	20 A G	3,89 to 6,12 [14 to 22]	2,78 [10]	1,27 [0.050]	5,56 [0.219]	0,05 to 0,19 [0.0020 to 0.0075]	21,82 [0.859]
	BM-1RQ1-A2	Up to 22 ampere load	22 A F	1,95 to 2,78 [7 to 10]	1,11 [4]	0,38 [0.015]	5,56 [0.219]	0,013 to 0,025 [0.0005 to 0.0010]	21,82 [0.859]
	BZ-2RQ1872-A2	Applications requiring gold alloy contacts	1 A P	2,5 to 3,61 [9 to 13]	1,11 [4]	0,38 [0.015]	3,56 [0.140]	0,01 to 0,05 [0.0004 to 0.0020]	33,32 ±1,14 [1.31 ±0.045]
	BZ-2RQ18-A2	Added overtravel. Roller plunger for rapid cam (30° max) rise and slide operation. Panel mount	15 A A	2,5 to 3,61 [9 to 13]	1,11 [4]	0,38 [0.015]	3,56 [0.140]	0,01 to 0,05 [0.0004 to 0.0020]	33,32 ±1,14 [1.31 ±0.045]
	BZ-2RQ1824-A2	Operating in temperature to 121 °C [250 °F]	15 A A	2,5 to 3,61 [9 to 13]	1,11 [4]	0,38 [0.015]	3,56 [0.140]	0,01 to 0,05 [0.0004 to 0.0020]	33,32 ±1,14 [1.31 ±0.045]
	BZ-2AQ18T1	Double-break circuitry	15 A T	3,89 to 6,68 [14 to 24]	1,11 [4]	0,69 [0.025]	3,58 [0.141]	0,03 to 0,10 [0.001 to 0.004]	33,35 ±1,19 [1.31 ±0.047]
	BM-1RQ18-A2	Up to 22 ampere load	22 A F	1,95 to 2,78 [7 to 10]	1,11 [4]	0,38 [0.015]	3,56 [0.140]	0,013 to 0,025 [0.0005 to 0.0010]	33,32 ±1,14 [1.31 ±0.045]
	BZ-2RQ181-A2	Applications requiring roller plunger 90° to major axis of switch	15 A A	2,5 to 3,61 [9 to 13]	1,11 [4]	0,38 [0.015]	3,56 [0.140]	0,01 to 0,05 [0.0004 to 0.0020]	33,32 ±1,14 [1.31 ±0.045]

* Reset characteristics
** Except where stated, ±0,76 mm [±0.030 in]
*** Except where stated, ±0,38 mm [±0.015 in].

MICRO SWITCH Premium Large Basic Switches

O.F. • Operating force
R.F. • Release force
P.T. • Pretravel
O.T. • Overtravel
D.T. • Differential travel
O.P. • Operating position

STRAIGHT LEVER ORDER GUIDE

	Catalog Listing	Recommended For	Electrical Data and UL Codes	O.F. N [oz]	R.F. min. N [oz]	P.T. max. mm [in]	O.T. min. mm [in]	D.T. mm [in]	O.P.*** mm [in]
	BZ-2RW8072-A2	Applications requiring gold alloy contacts	1 A P	0,7 [2.5]	0,14 [0.5]	–	5,56 [0.219]	0,18 to 1,27 [0.007 to 0.050]	19,1 [0.750]
	BZ-2RW80722555105-A2	Stability under varying humidity. Gold alloy contacts with seal	1 A P	0,7 [2.5]	0,14 [0.5]	–	5,56 [0.219]	0,18 to 1,27 [0.007 to 0.050]	19,1 [0.750]
	BZ-2RW8244-A2	Operating in temp. to 204 °C [400 °F] for 100 hours	5 A B	0,7 [2.5]	0,14 [0.5]	–	5,56 [0.219]	0,18 to 1,27 [0.007 to 0.050]	19,1 [0.750]
	BZ-RW8435-A2	Lowest operating force (without external return spring)	10 A I	0,07 [0.25]	–	6,76 [0.266]	5,56 [0.219]	0,08 to 0,38 [0.003 to 0.015]	19,1 [0.750]
	BZ-2RW876T	1.25-inch lever	15 A A	1,67 [6]	0,42 [1.5]	–	0,42 [0.141]	0,10 to 0,63 [0.004 to 0.025]	19,1 [0.750]
	BZ-2RW80-A2	2.5-inch lever	15 A A	0,7 [2.5]	0,14 [0.5]	–	5,56 [0.219]	0,18 to 1,27 [0.007 to 0.050]	19,1 [0.750]
	BZ-2RW84-A2	Lower force (without external return spring)	15 A A	0,28 [1]	0,03 [0.125]	8,33 [0.328]	5,56 [0.219]	0,18 to 1,27 [0.007 to 0.050]	19,1 [0.750]
	BZ-2RW805551-A2	Dustproof and splash resistant seal	15 A A	0,7 [2.5]	0,14 [0.5]	–	5,56 [0.219]	0,18 to 1,27 [0.007 to 0.050]	19,1 [0.750]
	BZ-2RWT04 (M8805/1-044)	MIL-PRF-8805 application requirements	15 A A	0,28 to 0,90 [1 to 3.25]	0,21 [0.75]	7,52 [0.296]	4,37 [0.172]	2,36 [0.093]	19,1 [0.750]
	BZ-2RW824-A2	Operating in temperature to 121 °C [250 °F]	15 A A	0,7 [2.5]	0,14 [0.5]	–	5,56 [0.219]	0,18 to 1,27 [0.007 to 0.050]	19,1 [0.750]
	BZ-RW80X	Manual reset, solder terminals	15 A E	0,63 [2.25]	–	–	5,56 [0.219] 0,38* [0.015]	–	19,05 [0.750] 7,14* [0.281]
	BZ-2RW863-A2	6-inch lever	15 A A	0,28 [1]	–	–	12,7 [0.50]	0,46 to 3,68 [0.018 to 0.145]	19,1 ±1,52 [0.75 ±0.06]
	BA-2RV-A2	Up to 20 ampere load	20 A G	0,7 [2.5]	0,14 [0.5]	15,88 [0.625]	1,98 [0.078]	2,77 max. [0.109] max.	19,1 [0.750]
	BM-1RW84-A2	Up to 22 ampere load	22 A F	0,28 [1]	0,03 [0.125]	7,54 [0.297]	5,56 [0.219]	0,13 to 0,84 [0.005 to 0.033]	19,1 [0.750]
	BE-2RV-A4	Up to 25 ampere load #8 screw terminals	25 A H	0,7 [2.5]	0,14 [0.5]	15,88 [0.625]	1,98 [0.078]	2,77 max. [0.109] max.	19,1 [0.750]
	BZ-2RW899-A2	Adjustable operating point 17 mm to 22 mm [0.67 in to 0.88 in]	15 A A	0,7 [2.5]	0,14 [0.5]	–	3,54*** [0.125]	0,18 to 1,27 [0.007 to 0.050]	17,02 to 22,35 [0.670 to 0.880]
	BZ-2RM-A2	Reverse acting actuator (switch plunger depressed in free position)	15 A A	1,67 [6]	0,28 [1]	5,56 [0.219]	5,56 [0.219]	0,10 to 0,89 [0.004 to 0.035]	19,1 [0.750]

* Reset characteristics.
** Except where stated ±0,76 mm [±0.030 in].
*** From 17 mm [0.670 in] O.P.

MICRO SWITCH Premium Large Basic Switches

O.F. • Operating force
R.F. • Release force
P.T. • Pretravel
O.T. • Overtravel
D.T. • Differential travel
O.P. • Operating position

SIMULATED ROLLER AND ROLLER LEVER ORDER GUIDE

	Catalog Listing	Recommended For	Electrical Data and UL Codes	O.F. N [oz]	R.F. min. N [oz]	P.T. max. mm [in]	O.T. min. mm [in]	D.T. mm [in]	O.P.*** mm [in]
	BZ-2RW80147-A2	1.05 inch (26,7 mm) (simulated roller) lever applications	15 A A	1,67 [6]	0,42 [1.5]	–	2,39 [0.094]	0,08 to 0,51 [0.003 to 0.020]	30,17 [1.188]
	BZ-2RW80196-A2	1.90 inch (48,3 mm) (simulated roller) lever applications	15 A A	0,97 [3.5]	0,21 [0.75]	–	3,96 [0.156]	0,10 to 1,0 [0.004 to 0.040]	30,17 ±0,76 [1.188 ±0.03]
	BZ-2RW82272-A2	Applications requiring gold alloy contacts	1 A P	1,67 [6]	0,42 [1.5]	–	2,39 [0.094]	0,08 to 0,51 [0.003 to 0.020]	30,17 [1.188]
	BZ-2RW822725551-A2	Apps requiring gold alloy contacts plus dustproof and splash resistant seal	1 A P	1,67 [6]	0,42 [1.5]	–	2,39 [0.094]	0,08 to 0,51 [0.003 to 0.020]	30,17 [1.188]
	BZ-2RW822-A2	26,7 mm [1.05 in] roller lever	15 A A	1,67 [6]	0,42 [1.5]	–	2,39 [0.094]	0,08 to 0,51 [0.003 to 0.020]	30,17 [1.188]
	BZ-2RW8222-A2	Roller turned 90°	15 A A	0,7 to 1,81 [2.5 to 6.5]	0,35 [1.25]	–	3,58 [0.141] max.	0,08 to 0,51 [0.003 to 0.020]	30,75 [1.25]
	BZ-2RW82224-A2	Operating in temperature to 121 °C [250 °F]	15 A A	1,67 [6]	0,42 [1.5]	–	2,39 [0.094]	0,08 to 0,51 [0.003 to 0.020]	30,17 [1.188]
	BZ-2RW8225551-A2	Dustproof and splash resistant seal	15 A A	1,67 [6]	0,42 [1.5]	–	2,39 [0.094]	0,08 to 0,51 [0.003 to 0.020]	30,17 [1.188]
	BZ-2RW82255-A2-S	Best service for sealed construction; stainless steel internal snap spring.	15 A A	1,67 [6]	0,42 [1.5]	–	2,39 [0.094]	0,08 to 0,51 [0.003 to 0.020]	30,17 [1.188]
	BA-2RV22-A2	Up to 20 ampere load	20 G	1,67 [6]	0,42 [1.5]	6,35 [0.250]	0,76 [0.030]	1,14 [0.045] max.	29,77 [1.172]
	BM-1RW822-A2	Up to 22 ampere load	22 F	1,67 [6]	0,42 [1.5]	–	2,39 [0.094]	0,025 to 0,33 [0.001 to 0.013]	30,17 [1.188]
	BE-2RV22-A4	Up to 25 ampere load; #8 screw terminals	25 H	1,67 [6]	0,42 [1.5]	6,35 [0.250]	0,76 [0.030]	1,14 [0.045] max.	29,77 [1.172]
	BZ-2RW82299-A2	Adjustable operating point. Roller lever 1.05 inch (26,7 mm)	15 A A	1,67 [6]	0,42 [1.5]	–	1,02 [0.040]	0,08 to 0,51 [0.003 to 0.020]	29,77 to 30,56 [1.172 to 1.203]
	BZ-2RW8299-A2	Adjustable operating point. Roller lever 1.90 inch (48,3 mm)	15 A A	0,97 [3.5]	0,21 [0.75]	–	2,16 [0.085]	0,10 to 1,0 [0.004 to 0.040]	29,2 to 31,5 [1.150 to 1.24]

** Except where stated ±0,38 mm [±0.015 in].

MICRO SWITCH Premium Large Basic Switches

O.F. • Operating force
R.F. • Release force
P.T. • Pretravel
O.T. • Overtravel
D.T. • Differential travel
O.P. • Operating position

ROLLER LEVER ORDER GUIDE

	Catalog Listing	Recommended For	Electrical Data and UL Codes	O.F. N [oz]	R.F. min. N [oz]	P.T. max. mm [in]	O.T. min. mm [in]	D.T. mm [in]	O.P.*** mm [in]
	BZ-2RW82725551-A2	Applications requiring gold alloy contacts, plus dustproof, and splash resistant seal	1 A P	0,97 [3.5]	0,21 [0.75]	–	3,96 [0.156]	0,10 to 1,0 [0.004 to 0.040]	30,17 ±0,76 [1.188 ±0.030]
	BZ-2RW82-A2	1.90 inch (48,3 mm) (steel roller) lever applications	15 A A	0,97 [3.5]	0,21 [0.75]	–	3,96 [0.156]	0,10 to 1,0 [0.004 to 0.040]	30,17 ±0,76 [1.188 ±0.030]
	BZ-2RW825551-A2	Dustproof and splash resistant seal	15 A A	0,97 [3.5]	0,21 [0.75]	–	3,96 [0.156]	0,10 to 1,0 [0.004 to 0.040]	30,17 ±0,76 [1.188 ±0.030]
	BZ-2RW8224-A2	Operating in temperature to 121 °C [250 °F]	15 A A	0,97 [3.5]	0,21 [0.75]	–	3,96 [0.156]	0,10 to 1,0 [0.004 to 0.040]	30,17 ±0,76 [1.188 ±0.030]
	BA-2RV2-A2	Up to 20 ampere load	20 A G	0,97 [3.5]	0,14 [0.5]	11,89 [0.468]	1,52 [0.060]	2,16 [0.085]	30,17 ±0,76 [1.188 ±0.030]
	BM-1RW82-A2	Up to 22 ampere load	22 A F	0,97 [3.5]	0,21 [0.75]	–	3,96 [0.156]	0,08 to 0,56 [0.003 to 0.022]	30,17 ±0,76 [1.188 ±0.030]
	BE-2RV2-A4	Up to 25 ampere load; #8 screw terminals	25 A H	0,97 [3.5]	0,14 [0.5]	11,89 [0.468]	1,52 [0.060]	2,16 [0.085]	30,17 ±0,76 [1.188 ±0.030]
	BZ-RW922-A2	Best repeatability and O.P. stability	10 A I	3,34 [12]	1,11 [4]	0,35 [0.015]	2,54 [0.100]	0,013 to 0,025 [0.0005 to 0.0010]	31,37 [1.235]
	BZ-2RW826-A2	One-way roller 9,4 mm x 3,8 mm [0.37 in dia. x 0.15 in] wide roller	15 A A	1,67 [6]	0,42 [1.5]	–	2,39 [0.094]	0,08 to 0,51 [0.003 to 0.020]	41,34 [1.625]
	BZ-2RW825-A2	One-way roller 4,83 mm x 4,83 mm [0.19 in dia. x 0.19 in] wide roller	15 A A	2,22 [8]	0,42 [1.5]	–	1,52 [0.060]	0,38 [0.015]	28,96 [1.14]

NOTE: For adjustable operate point and simulated roller lever switches, refer to previous page.
** Except where stated ±0,38 mm [±0.015 in].

O.F. • Operating force
R.F. • Release force
P.T. • Pretravel
O.T. • Overtravel
D.T. • Differential travel
O.P. • Operating position

FLEXIBLE LEAF AND FLEXIBLE ROLLER LEAF ORDER GUIDE

	Catalog Listing	Recommended For	Electrical Data and UL Codes	O.F. N [oz]	R.F. min. N [oz]	P.T. max. mm [in]	O.T. min. mm [in]	D.T. mm [in]	O.P.*** mm [in]
	BZ-2RL-A2	Force and stability of the flexible leaf actuator	15 A A	1,39 [5]	0,14 [0.5]	–	1,52 [0.060]	1,27 [0.050]	17,48 [0.688]
	BZ-2RL5551-A2	Dustproof and splash resistant seal	15 A A	1,95 [7]	0,14 [0.5]	–	1,52 [0.060]	1,27 [0.050]	17,48 [0.688]
	BZ-2RLT04 (M8805/1-001)	MIL-PRF-8805 application requirements	15 A A	1,39 [5]	0,14 [0.5]	–	1,52 [0.060]	1,27 [0.050]	17,48 [0.688]
	BZ-2RL24-A2	Operating in temperature to 121 °C [250 °F]	15 A A	1,39 [5]	0,14 [0.5]	–	1,52 [0.060]	1,27 [0.050]	17,48 [0.688]
	BZ-RLX	Manual reset; solder terminals	15 A E	0,83 [3]	–	–	1,57 [0.062] 0,38* [0.015]	–	17,48 [0.688] 7,14* [0.281]
	BA-2RL-A2	Up to 20 ampere load	20 A G	2,5 [9]	0,28 [1]	–	1,57 [0.062]	1,57 [0.062]	17,48 [0.688]
	BE-2RL-A4	Up to 25 ampere load, #8 screw terminals	25 A H	2,5 [9]	0,28 [1]	–	1,57 [0.062]	1,57 [0.062]	17,48 [0.688]
	BZ-RL24-A2	Operating in temp. to 121 °C [250 °F] for 100 hours	5 A B	1,39 [5]	0,14 [0.5]	–	1,52 [0.060]	1,27 [0.050]	28,6 [1.125]
	BZ-2RL2-A2	Force and stability of the flexible leaf with roller	15 A A	1,39 [5]	0,14 [0.5]	–	1,52 [0.060]	1,27 [0.050]	28,6 [1.125]
	BZ-2RL25551-A2	Dustproof and splash resistant seal	15 A A	1,95 [7]	0,14 [0.5]	–	1,52 [0.060]	1,27 [0.050]	28,6 [1.125]
	BZ-2RL2T04 (M8805/1-036)	MIL-PRF-8805 application requirements	15 A A	1,04 to 1,39 [3.75 to 5]	0,14 [0.5]	–	1,52 [0.060]	1,27 [0.050]	28,6 [1.125]
	BA-2RL2-A2	Up to 20 ampere load	20 A G	2,5 [9]	0,28 [1]	–	1,52 [0.060]	1,65 [0.065]	28,6 [1.125]
	BE-2RL2-A4	Up to 25 ampere load, #8 screw terminals	25 A H	2,5 [9]	0,28 [1]	–	1,52 [0.060]	1,65 [0.065]	28,6 [1.125]

NOTE: For adjustable operate point and simulated roller lever switches, refer to previous page.
** Except where stated ±0,76 mm [±0.030 in].

STANDARD ACTUATOR OPTIONS, TERMINALS, & DIMENSIONS

BZ/BM Series: Pin plunger

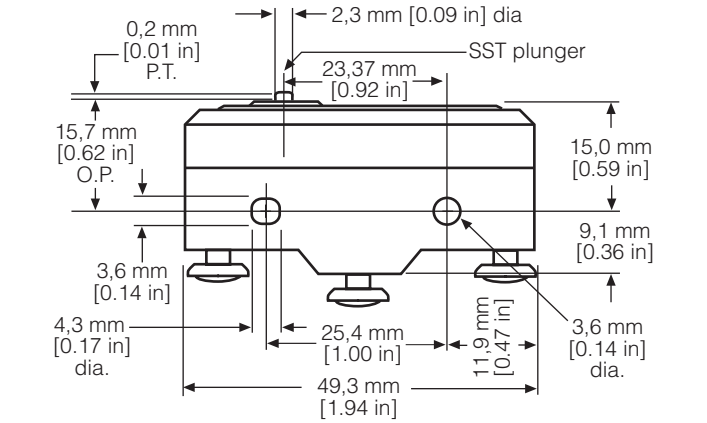

BA/BE Series: Pin plunger

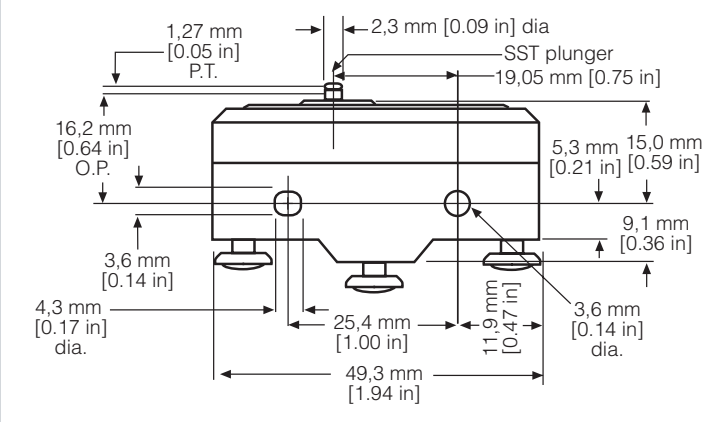

BZ/BM Series: Overtravel plunger

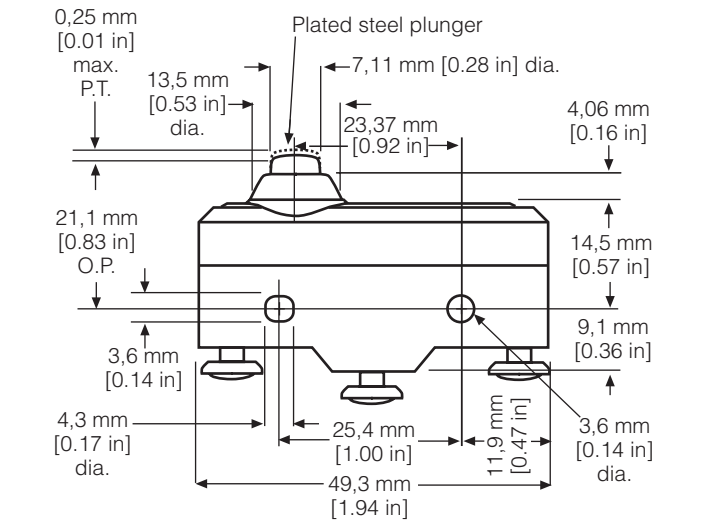

BA/BE Series: Overtravel plunger

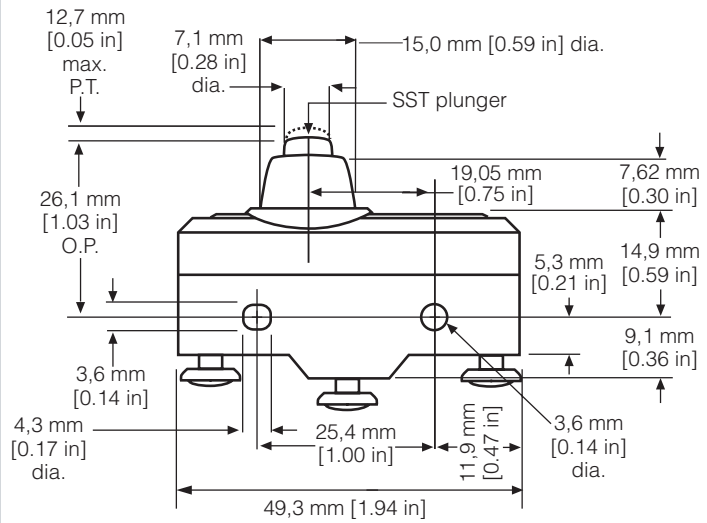

BZ/BM Series: Bushing-mount overtravel plunger

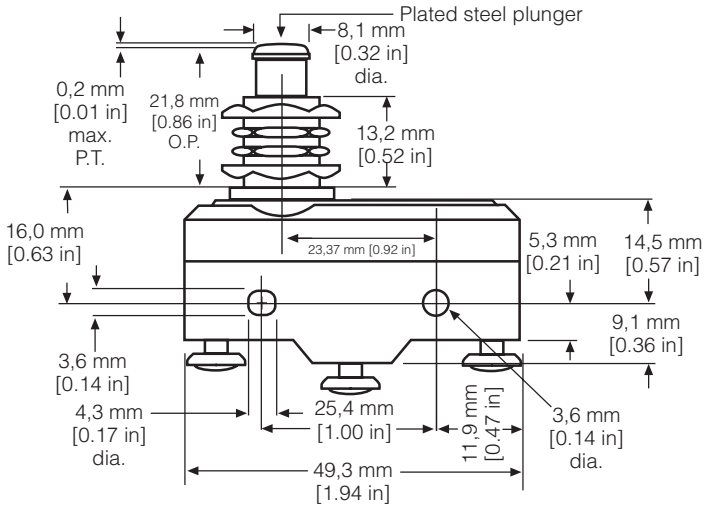

BA/BE Series: Bushing-mount overtravel plunger

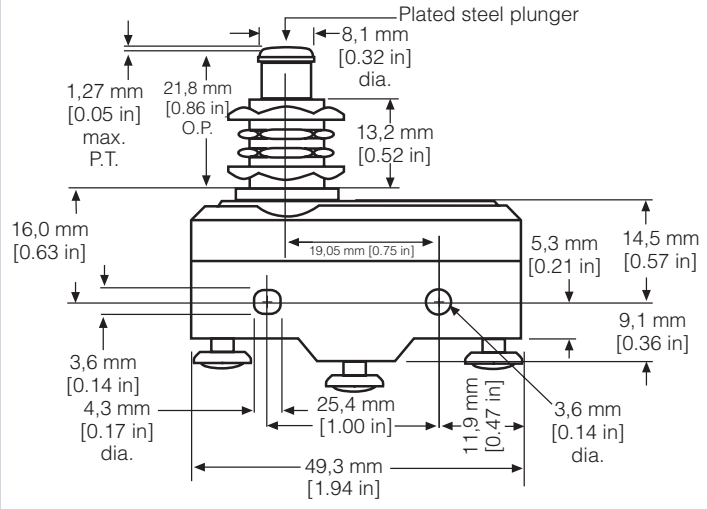

NOTE: Typical switch width is 17,5 mm [0.69 in]

STANDARD ACTUATOR OPTIONS, TERMINALS, & DIMENSIONS

BZ/BM Series: Flexible leaf actuator

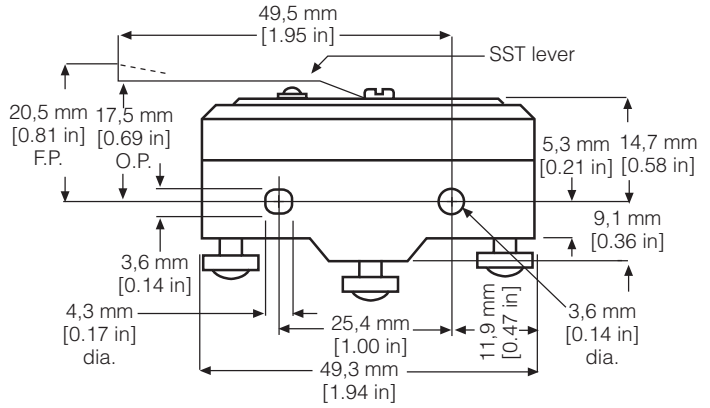

BA/BE Series: Flexible leaf actuator

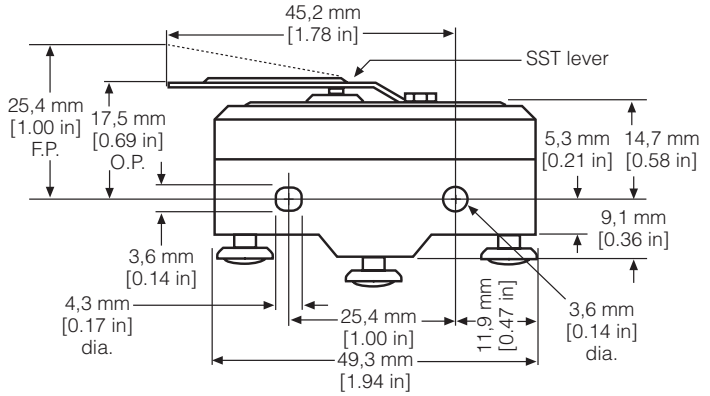

BZ/BM Series: Straight lever with external return spring

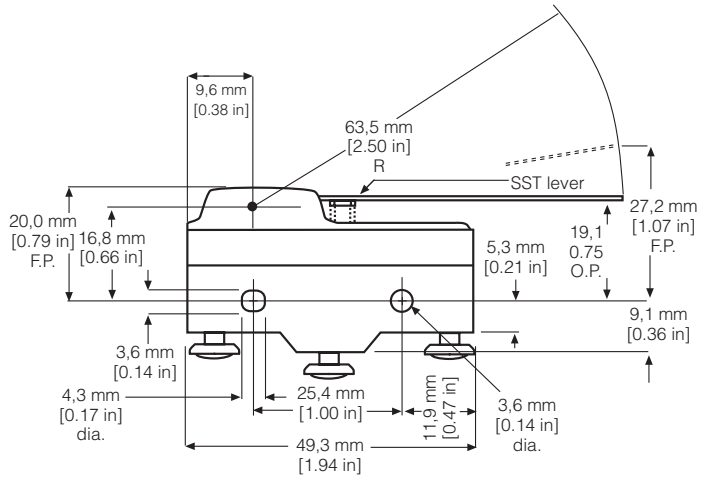

BA/BE Series: Straight lever

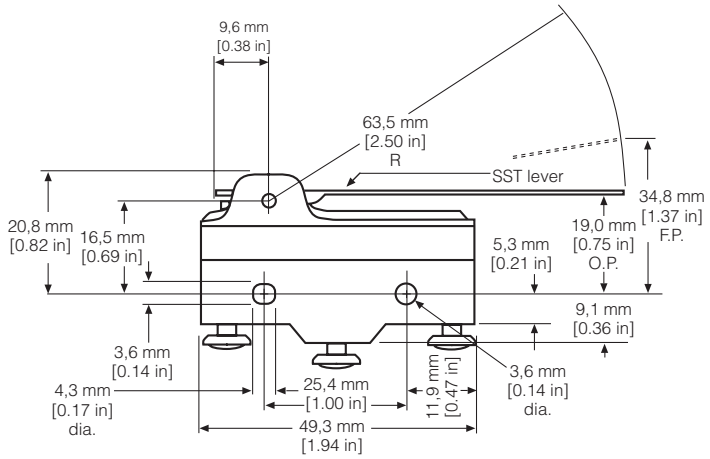

BZ/BM Series: Roller lever with external return spring

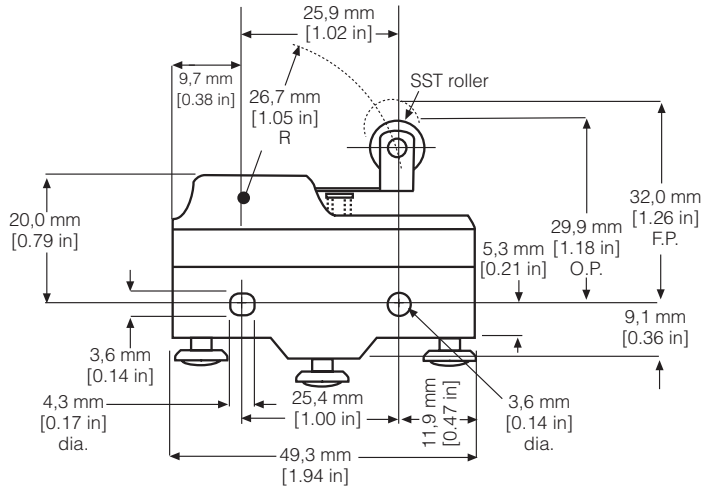

Pin plunger with manual reset

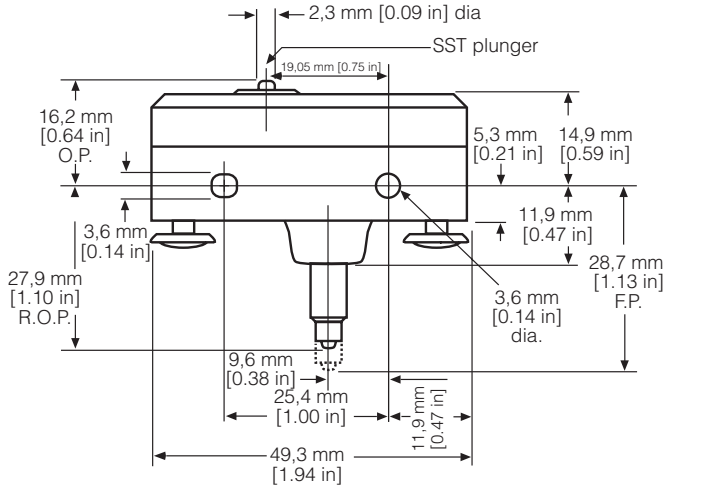

NOTE: Typical switch width is 17,5 mm [0.69 in]

MICRO SWITCH Premium Large Basic Switches

6AS SERIES - PREMIUM LARGE SNAP-ACTION TANDEM SWITCH ASSEMBLY

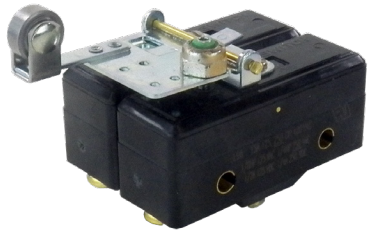

The MICRO SWITCH 6AS Series consists of two large premium BZ/BA/BM/BE snap-action switches ganged together and actuated by a single actuator. Operating characteristics are dependent upon the type of individual switches and actuators chosen. Field adjustable operating point on one or both basic switches. Solder, A2, and T-type terminations available, along with straight, roller, and leaf levers. Mounting holes accept pins or screws of 3,53 mm [0.139 in] diameter. Often used for boiler controls or anywhere two circuits need to be controlled by one actuator.

O.F. • Operating force
R.F. • Release force
O.T. • Overtravel
D.T. • Differential travel
O.P. • Operating position

6AS SERIES ORDER GUIDE

	Catalog Listing	Recommended For	Electrical Data and UL Codes	Lever length	Terminal type	O.F. N [oz]	R.F. min. N [oz]	O.T. min. mm [in]	D.T. mm [in]	O.P.* mm [in]
	6AS34	Centered lever. Adjustment over switch D	15 A A	30,56 mm [1.203 in]	A2	2,22 [8]	0,14 [0.5]	0,51 [0.020]	2,77 [0.109]	29,77 [1.172]
	6AS36	Lever over switch C. Adjustment over switch D	15 A A	30,56 mm [1.203 in]	A2	2,22 [8]	0,14 [0.5]	0,51 [0.020]	2,77 [0.109]	29,77 [1.172]
	6AS16	Centered lever. Adjustment over switch D	20 A G	30,56 mm [1.203 in]	A2	3,89 [14]	1,11 [4]	1,02 [0.040]	3,96 [0.156]	30,96 ±1,14 [1.219 ±0.045]
	6AS201	Lever over switch C. No adjustment. Sealed construction	15 A A	26,67 mm [1.05 in]	A2 and D6 6,35 mm x 0,81 mm [0.25 in x 0.32 in]	4,2 [15]	0,42 [1.5]	2,4 [0.094]	1,3 [0.050]	30,2 [1.188]
	6AS5	Centered leaf. No adjustment. Switches operate within 0.030 in of each other	15 A A	38,38 [1.51]	A2	–	–	0,76 to 1,52 [0.030 to 0.060]	–	–
	6AS28	Centered lever. Adjustment over switch C	20 A G	32,26 [1.27]	A2	3,89 [14]	1,11 [4]	1,02 [0.040]	–	18,67 [0.735]

* Except where stated ±0,76 mm [±0.030 in].

STANDARD ACTUATOR OPTIONS, TERMINALS, & DIMENSIONS

6AS Series: Straight Lever

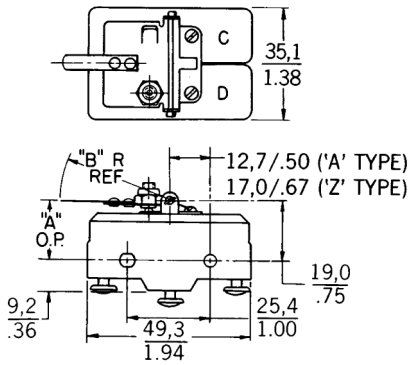

6AS Series: Leaf actuator

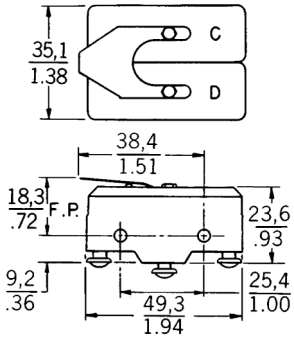

6AS Series: Roller Lever

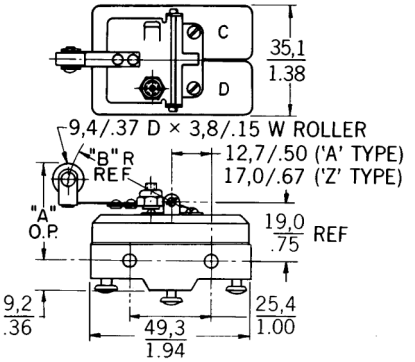

OPERATING CHARACTERISTICS

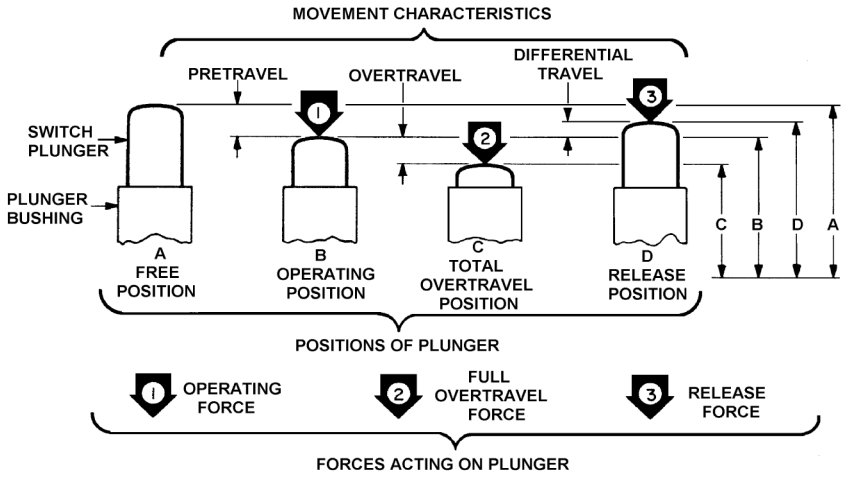

Table 3. Operating Characteristic Definitions

Characteristic	Description
Differential Travel-DT	Plunger or actuator travel from point where contacts "snap-over" to point where they "snap-back."
Free Position-FP	Position of switch plunger or actuator when no external force is applied.
Full Overtravel Force	Force required to attain full overtravel of actuator.
Operating Position-OP	Position of switch plunger or actuator at which point contacts snap from normal to operated position. With flexible or adjustable actuators, the operating position is measured from the end of the lever or its maximum length. Location of operating position measurement shown on mounting dimension drawings.
Operating Force-OF	Amount of force applied to switch plunger or actuator to cause the contact "snap-over." Note in the case of adjustable actuators, the force is measured from the maximum length position of the lever.
Overtravel-OT	Plunger or actuator travel safely available beyond operating position.
Pretravel-PT	Distance or angle traveled in moving plunger or actuator from free position to operating position.
Release Force-RF	Amount of force still applied to switch plunger or actuator at the moment contacts snap from operated position to non-operated position.
Total Travel	Distance from actuator free position to overtravel limit position.

AVAILABLE TERMINALS

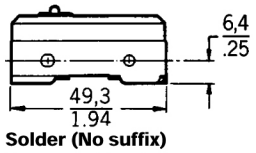

Solder (No suffix)
Use up to #14 wire

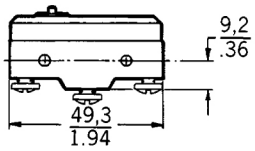

A2
Bottom facing 6-32 NC × .218″ screw with cup washers
A4
(Same as A2 except #8 screws)

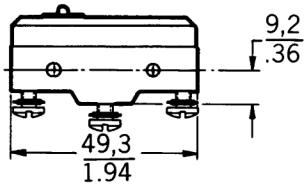

T
Bottom facing 6-32 NC × .218″ screw with Sems lockwashers

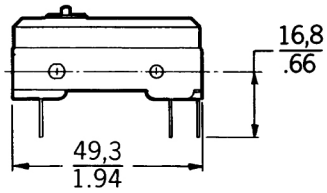

D5
.250″ (6,35 mm) wide × .030″ (7,62) thick quick-connect

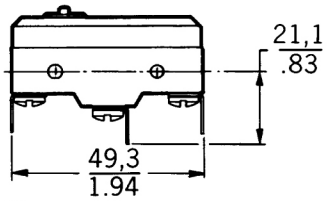

D6
.250″ (6,35 mm) wide × .032″ (0,81 mm) thick quick-connect

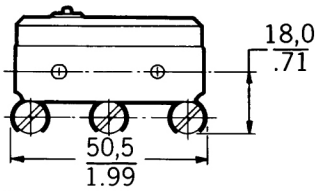

P4
Side facing 8-32 × .218″ screw with cup washers

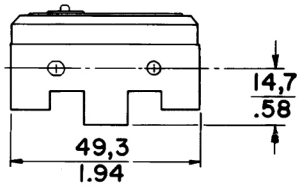

PC2
Self lifting pressure plate terminals and plastic barriers for added dielectric protection

ACTUATORS

BA, BE, BM, and BZ standard snap-action switches use the actuators described:

Pin plunger; in-line motion

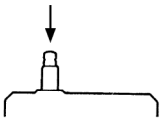

Overtravel plunger; in-line applications requiring additional overtravel

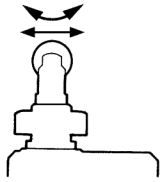

Added overtravel in a panel-mount roller plunger; actuation by cam

Leaf; low-force moving cams or slides

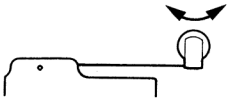

Roller lever; very low-force, fast moving cams

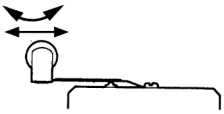

Roller leaf; low-force, large movement actuation

Lever; very low-force, slow cams and slides

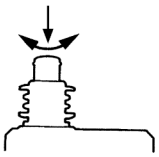

Added overtravel in a panel-mount plunger; heavy-duty, in-line applications or slow cams.
Cam rise should not exceed 30°

MICRO SWITCH Premium Large Basic Switches

LARGE PREMIUM SWITCH SERIES NOMENCLATURE TREE (NOT ALL CONFIGURATIONS AVAILABLE)

B Z – 2 R W 82255 – A2 – S

Type & Contact

B Series Premium Basics SPDT

substitute **W** Series for SPNC circuitry

substitute **Y** Series for SPNO circuitry

Switch type

Z	15 A capacity**; pin plunger 23,3 [0.917] from mounting hole
A	20 A capacity**; pin plunger 19,0 [0.750] from mounting hole
M	22 A capacity; pin plunger 23,3 [0.917] from mounting hole
E	25 A capacity; pin plunger 19,0 [0.750] from mounting hole

Break distance (nominal)

1	0,25 mm [0.01 in]
2	0,50 mm [0.02 in]
3	0,91 mm [0.036 in]
4	1,14 mm [0.045 in] (MT-4R only)
5	1,27 mm [0.050 in] Type A switches only
7	1,78 mm [0.07 in] Type Z switches only
-	0,15 mm [0.006 in]

Construction

R	Moving contact rivet construction
A	Shorting bar circuitry Type Z switches only
S	Shorting bar circuitry Type A switches only
G	Make-before-break switches
Y	Split contact switches Type Z switches only

Integral actuator

B	Low overtravel plunger, Type A & E
D	Low overtravel plunger, Type Z
DS	Sealed low overtravel plunger, Type Z only
L	Leaf actuator Type A & Z only
N	High overtravel plunger/sealed boot
Q	High overtravel plunger, Type A & Z
S	Medium overtravel plunger, Type Z only
V	Rigid lever Type A & E only
W	Rigid or resilient lever, Type Z only
M	Reverse actuating lever
QW	Omnidirectional "wobble" lever
-	Standard pin plunger

Misc. Variations (Numbers or Letters)

0	Before other number= military construction
1	Threaded bushing, panel mount Q-plunger
2	Variation of design
4	On W-lever, light force var. (no spring)
5	Used with other 5s, denotes sealed cons.
6/7	On Q plunger, replac. for die-cast switches
7	Variation of design, other than Q plungers
8	With W-levers, rigid type lever (ex. W80)
8	With Q-plunger, roller plunger inline to axis
9	With L-leaf actuators, flat leaf
72	Gold contacts
9	On Q-plunger, detach. roller, turned 90°
22	Short roller lever, V- or W-lever
24	Heat resistant construction 121 °C
55	Heavy-duty seal cons. Stain steel snap spring, Special inserts
81	On Q-plunger, roller 90° to major axis
82	Long W-lever, with roller
99	On W-lever, adj. O.P. (usually w/ 8)
244	High temp. constr. Diff snap spring Lower elect. rating
5551	General use sealed construction
822	Short W-lever with roller
X	Maintained manual reset

Terminal type

A2	Bottom facing #6 screws & cupwashers
A4	Bottom facing #8 screws & cupwashers
A22	A2 type without screws & cupwashers
A41	A4 type without screws & cupwashers
A46	A4 type #8 screws and lock washers
D1	89° QC used with flat base w/o slots
D5	90° QC used with flat base
D6	90° QC used with A2 (step) base
P1	(left) side facing #8 screw w/ cupwasher solder lug base
P2	Same as P1, except facing right
P4	(left) side facing #8 screw w/ cupwasher integral construction
P5	Same as P4, except facing right
T	Bottom facing #6 screws/lockwashers
-	Solder lug or no terminal hardware

Snap spring mat'l (variation)

S	Stainless steel snap spring

NOTES:
* Break distance between separated contacts (nominal values)
** Some versions have lower electrical ratings

MICRO SWITCH Premium Large Basic Switches

LARGE SNAP-ACTION SWITCH ACCESSORIES

Brackets

Description	8MA1	8MA2	17MA1-B
Description	Adjustable mounting bracket with adjustment slot on left	Adjustable mounting bracket with adjustment slot on right	Conversion mounting bracket
Housing material	Steel	Steel	Corrosion-resistant metal
Measurements	60,2 mm W x 21,3 mm H x 7,4 mm D [2.37 in W x 0.84 in H x 0.29 in D]		66,8 mm W x 19,0 mm D [2.63 in W x 0.75 in D]
Features	Sturdy plated steel construction; fast, easy screwdriver adjustment; can be used with most standard basic switches		Converts standard basic switches from side to top mount; corrosion resistant; snaps into switch mounting holes without tools

Die-cast Zinc Enclosures

Description	3PA1	3PA28	3PA2
Description	Mounted from either side through 3,55 mm [0.140 in] dia. holes on 25,4 mm [1.0 in] centers; conduit/hub 0.5 – 14 NPT internal thread	Mounted from either side through 3,55 mm [0.140 in] dia. holes on 25,4 mm [1.0 in] centers. 1/2-14 NPSM internal thread conduit hub	Switch secured in enclosure; two 4,37 mm [0.172 in] dia. holes in flange accept #8 screws for mounting on 41,3 mm [1.625 in] centers; conduit/hub 0.5 – 14 NPT internal thread
Housing material	Die-cast zinc enclosure (side mount)	Die-cast zinc enclosure (side mount)	Die-cast zinc enclosure (flange mount)
Measurements	74,8 mm W x 42,9 mm H x 25,4 mm D [2.95 in W x 1.69 in H x 1.00 in D]	74,8 mm W x 42,9 mm H x 25,4 mm D [2.95 in W x 1.69 in H x 1.00 in D]	74,8 mm W x 42,9 mm H x 25,4 mm D [2.95 in W x 1.69 in H x 1.00 in D]
Sealing/Features	NEMA 1; IP 40; protects the switch from physical abuse and personnel from contact with exposed terminals		

Plastic Thermal Enclosures

Description	5PA1	5PA2	5PA3
Description	Plastic terminal enclosure used with solder terminal switches	Plastic terminal enclosure use with screw terminal switches	Plastic terminal enclosure used with either solder or screw terminal switches with auxiliary actuators assembled
Housing material	plastic	plastic	plastic
Measurements	52,8 mm W x 16,1 mm H [2.08 in W x 0.64 in H]	52,8 mm W x 20,2 mm H x 21,0 mm D [2.08 in W x 0.80 in H x 0.83 in D]	52,8 mm W x 20,2 mm H x 21,0 mm D [2.08 in W x 0.80 in H x 0.83 in D]
Sealing/Features	NEMA 1, IP 40; easy to use; screw and solder terminal versions; protect personnel from contact with exposed terminals		

AUXILIARY ACTUATOR ORDER GUIDE

	Catalog Listing	Description	Use only with	Overtravel min. mm [in]	Operating Position* mm [in]	Free Position mm [in]
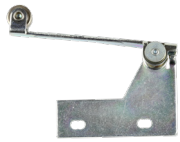	JR	Roller lever for "S" plunger type BZ switches only. Permits cam operation	BZ	11,1 mm [0.437 in]	44,45 mm ±3,18 mm [1.75 in ±0.125 in]	–
	AD5721R (M8805/59) AN3169-1	Adjustable roller lever. Tang on top of actuator can be bent to adjust O.P. and F.P.	BZ, BM	11,1 mm [0.437 in] approx.	31,75 mm to 41,15 mm [1.25 in to 1.62 in]	39,6 mm to 43,7 mm [1.56 in to 1.72 in]
	ADA3721R		BA, BE	9,53 mm [0.375 in] approx.	40,48 mm [1.594 in] approx.	46,03 mm [1.812 in]
	MC2711 (M8805/59) AN3168-2	Straight plunger. Panel mount	BZ, BM	4,78 mm [0.188 in]	27,79 mm [1.094 in]	29,4 mm [1.156 in]
	MCA2711		BA, BE	3,96 mm [0.156 in]	28,17 mm [1.109 in]	30,18 mm [1.188 in]
	MC2711H	Sealed straight plunger. Panel mount. Elastomer boot seal resists liquid splash and dirt. Furnished unassembled.	BZ, BM	4,78 mm [0.188 in]	28,98 mm [1.141 in]	29,4 mm [1.156 in]
	MCA2711H		BA, BE	4,37 mm [0.172 in]	27,38 mm ±0,76 mm [1.078 in ±0.030 in]	29,56 mm [1.156]
	MD3211Q	Roller plunger. Panel mount. Roller parallel to long axis of the switch	BZ, BM	3,18 mm [0.125 in] approx.	35,7 mm [1.406 in]	37,69 mm [1.484 in]
	MDA3711Q		BA, BE	3,18 mm [0.125 in]	36,12 mm [1.422 in]	37,69 mm [1.484 in]
	MD3211Q1	Cross roller plunger. Panel mount. Roller perpendicular to long axis of the switch	BZ, BM	3,18 mm [0.125 in] approx.	35,7 mm [1.406 in]	37,69 mm [1.484 in]
	MDA3711Q1		BA, BE	3,18 mm [0.125 in]	36,12 mm [1.422 in]	37,69 mm [1.484 in]
	MC7711 (M8805/58) AN3167-1	High overtravel plunger. Panel mount	BZ, BM	20,62 mm [0.812 in]	69,1 mm [2.719 in]	70,64 mm [2.781 in]
	MCA7711		BA, BE	19,84 mm [0.781 in]	69,44 mm [2.734 in]	71,42 mm [2.812 in]

* Except where stated ±1,14 mm [±0.045 in].
NOTE: All actuators are for use with pin plunger types only, except catalog listing JR.