OMRON

Slim I/O Relay
G2RV-SR/G3RV-SR

Global standard size, low profile slim I/O relay with width 6.2 mm, slim I/O solid state relay

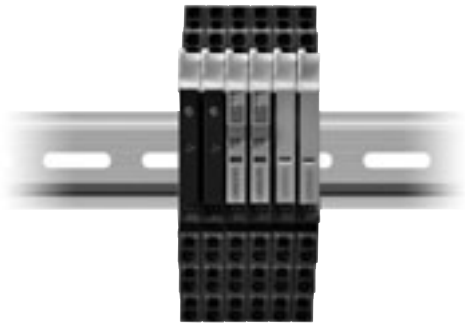

For the recent information on models that have been certified for safety standards, refer to your OMRON website.

- Realized about 25% lower profile than conventional products, contributing to further miniaturization of the control panel.
- Push-In Plus technology are used to save wiring work in comparison with conventional screw terminals. (Wiring time is reduced by 60%* in comparison with traditional screw terminals.)
- No screw loosening means maintenance-free application, realizing high reliability
- 'Hand-free' structure that holds an inserted flat-blade screwdriver to achieve easier wiring work for stranded wires.
- Screw terminal is also stocked to meet the screw type needs.
- Mounted relay or solid-state relay has a plug-in terminal that is difficult to bend at the time of exchange.

✻ According to OMRON actual measurement data from November 2015.

⚠ Refer to *Safety Precautions* on page 20.

Slim I/O Relay Types

G2RV-SR series mounted relay: electromagnetic relay ..... from page 2
G3RV-SR series mounted relay: solid state relay ..... from page 10

Common matter

Common precautions ..... from page 20
Common accessories (order separately)..... from page 25

ПРОМЭЛЕКТРОНИКА / sales@prom-elec.com

Slim I/O Relay

G2RV-SR

Global standard size, low profile slim I/O relay with width 6.2 mm

- Realized about 25% lower profile than conventional products, contributing to further miniaturization of the control panel.
- Realized opening and closing ability with one pole 6 A slim shape.
- Micro load products for one pole 50 mA using Au-plated contacts for small load switching also available.
- Since G2RV is a transparent case, confirming the state of the contact with the naked eye is possible, and easy to confirm abnormality on-site (installed location).
- Screw terminal is also stocked to meet the screw type needs.
- Mounted relay uses plug-in terminals that are difficult to bend when exchanging.
- G3RV-SR featuring a solid state relay similar in shape to G2RV-SR also available.

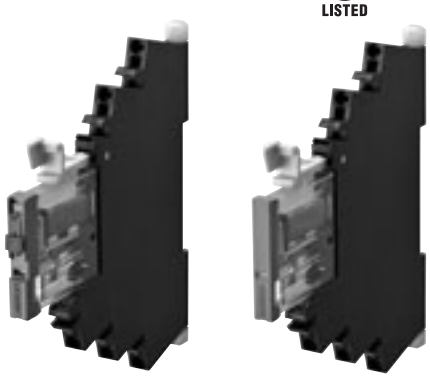

For the recent information on models that have been certified for safety standards, refer to your OMRON website.

Refer to *Safety Precautions* on page 20.

Features

Standard model/Micro load

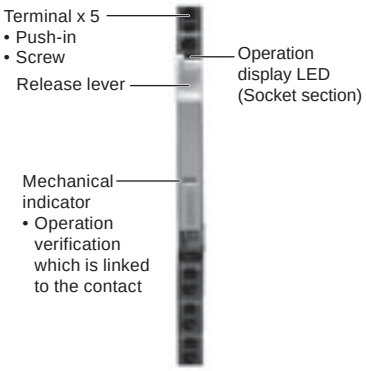

With latching lever (Test switch)

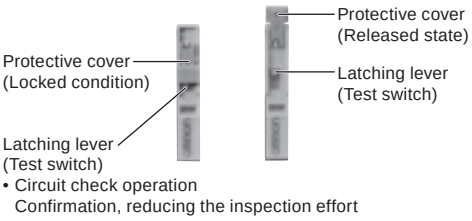

PAT

"Foreign matter intrusion prevention structure"
"Malfunction prevention stopper"

Push-In Plus technology

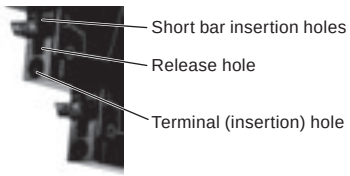

Transparent case

Relay contact
Easy confirmation of the situation

Release lever

Relay easily fixed/removed

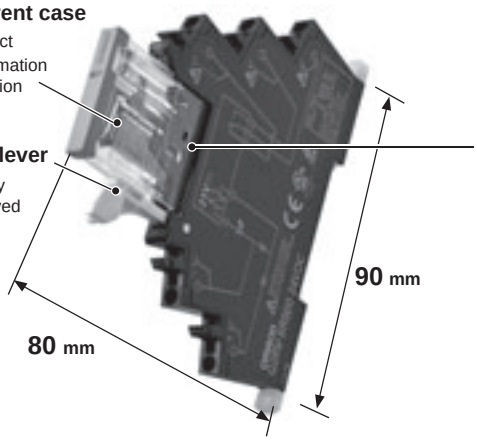

Plug-in terminal

Peace of mind as the terminal does not bend when replacing

Model Number Structure

Model Number Legend

G2RV-SR □□ □ - □ □
(1) (2) (3) (4) (5) (6)

(1) Basic model name
G2RV: Slim I/O Relay

(2) Sub type
SR: Slim relay + integrated low profile socket

(3) Terminal (wire connection)
50: Push-In Plus Terminal
70: Screw terminal

(4) Latching lever (test switch)
0: Without latching lever
1: With latching lever

(5) Contact structure
Blank: Standard
AP: Microloads

(6) Rated input voltage
12, 24 VDC
24, 48 VAC/VC
100, 110, 200, 230 VAC

Ordering Information

Terminal (Wire connection)	Classification	Latching lever (Test switch)	Rated input voltage (V)		Model
Push-In Plus Terminal	Standard	No	DC	12	**G2RV-SR500 DC12**
				24	**G2RV-SR500 DC24**
			AC/DC	24	**G2RV-SR500 AC/DC24**
				48	**G2RV-SR500 AC/DC48**
			AC	100	**G2RV-SR500 AC100**
				110	**G2RV-SR500 AC110**
				200	**G2RV-SR500 AC200**
				230	**G2RV-SR500 AC230**
		Yes	DC	24	**G2RV-SR501 DC24**
			AC/DC	24	**G2RV-SR501 AC/DC24**
	Microloads	No	DC	12	**G2RV-SR500-AP DC12**
				24	**G2RV-SR500-AP DC24**
			AC/DC	24	**G2RV-SR500-AP AC/DC24**
				48	**G2RV-SR500-AP AC/DC48**
			AC	100	**G2RV-SR500-AP AC100**
				110	**G2RV-SR500-AP AC110**
				200	**G2RV-SR500-AP AC200**
				230	**G2RV-SR500-AP AC230**
Screw terminal	Standard	No	DC	12	**G2RV-SR700 DC12**
				24	**G2RV-SR700 DC24**
			AC/DC	24	**G2RV-SR700 AC/DC24**
				48	**G2RV-SR700 AC/DC48**
			AC	100	**G2RV-SR700 AC100**
				110	**G2RV-SR700 AC110**
				200	**G2RV-SR700 AC200**
				230	**G2RV-SR700 AC230**
		Yes	DC	24	**G2RV-SR701 DC24**
			AC/DC	24	**G2RV-SR701 AC/DC24**
	Microloads	No	DC	12	**G2RV-SR700-AP DC12**
				24	**G2RV-SR700-AP DC24**
			AC/DC	24	**G2RV-SR700-AP AC/DC24**
				48	**G2RV-SR700-AP AC/DC48**
			AC	100	**G2RV-SR700-AP AC100**
				110	**G2RV-SR700-AP AC110**
				200	**G2RV-SR700-AP AC200**
				230	**G2RV-SR700-AP AC230**

Note: Sockets are not sold individually.

Relay for Maintenance

Model Number Legend

G2RV-1 - S □ - □ - G □
(1) (2) (3) (4) (5) (6)

(1) No. of poles
1: 1 pole

(2) Terminal
S: plug-in

(3) Latching lever (Test switch)
Blank: Without latching lever
I: With latching lever

(4) Contact material
Blank: Ag alloy
AP: Ag alloy + Au plating

(5) Types of relay for exchange
G: G2RV-SR series equipped Relay

(6) Rated coil voltage
Number: 11, 21, 48 VDC

G2RV-1-SI-G

G2RV-1-S(-AP)-G

List of Models

Type	Latching Lever (Test switch)	Rated coil voltage (V)		Model	Applicable model
Standard	No	DC	11	**G2RV-1-S-G DC11**	G2RV-SR700/500 DC12V
			21	**G2RV-1-S-G DC21**	G2RV-SR700/500 DC24V
					G2RV-SR700/500 AC/DC24V
			48	**G2RV-1-S-G DC48**	G2RV-SR700/500 AC/DC48V
					G2RV-SR700/500 AC100V
					G2RV-SR700/500 AC110V
					G2RV-SR700/500 AC200V
					G2RV-SR700/500 AC230V
	Yes	DC	21	**G2RV-1-SI-G DC21**	G2RV-SR701/501 DC24V
					G2RV-SR701/501 AC/DC24V
Microload	No	DC	11	**G2RV-1-S-AP-G DC11**	G2RV-SR700/500-AP DC12V
			21	**G2RV-1-S-AP-G DC21**	G2RV-SR700/500-AP DC24V
					G2RV-SR700/500-AP AC/DC24V
			48	**G2RV-1-S-AP-G DC48**	G2RV-SR700/500-AP AC/DC48V
					G2RV-SR700/500-AP AC100V
					G2RV-SR700/500-AP AC110V
					G2RV-SR700/500-AP AC200V
					G2RV-SR700/500-AP AC230V

Note: Voltage is reduced within the socket for the slim I/O relay, so the rated input voltage and rated coil voltage of replacement relays are different.

Accessories (order separately)

Refer to page 25 for G2RV-SR/G3VR-SR Common Accessories.

Specifications

Ratings

Coil ratings

Rated input voltage	Rated current			Must operate voltage	Must release voltage	Power consumption		Maximum allowable voltage
	AC		DC	Percentage of the rated voltage		AC (VA)	DC (mW)	Percentage of the rated voltage
	50 Hz	60 Hz						
12 VDC	–	–	27.9 mA	80% max.*	10% min.	–	Approx. 300 mW	110%
24 VDC	–	–	13.5 mA			–	Approx. 300 mW	
24 VAC/VDC	12.5 mA	12.6 mA	12.6 mA			Approx. 0.5 VA	Approx. 300 mW	
48 VAC/VDC	5.9 mA	6.1 mA	5.2 mA			Approx. 0.4 VA	Approx. 250 mW	
100 VAC	5.9 mA	6.0 mA	–			Approx. 0.8 VA	–	
110 VAC	5.9 mA	5.9 mA	–			Approx. 0.8 VA	–	
200 VAC	6.6 mA	7.6 mA	–			Approx. 1.7 VA	–	
230 VAC	7.3 mA	8.4 mA	–			Approx. 1.7 VA	–	

Note: The operating characteristics are measured at ambient temperature of 23°C.

✻ Operating voltage will be, for mounting in the upside down direction, 85% max.
(Upside down: Direction in which the mechanical indicator faces down)

Contact ratings

Item	Standard (G2RV-SR700, 500, 701, 501)		For microloads (G2RV-SR700-AP, 500-AP) *2
Contact configuration	SPDT		
Load	Resistive load (cosϕ=1)	Inductive load (cosϕ=0.4, L/R=7ms)	Resistive load (cosϕ=1)
Rated load	6 A at 250 VAC 6 A at 30 VDC	2.5 A at 250 VAC 2 A at 30 VDC	50 mA at 30 VAC 50 mA at 36 VDC
Rated carry current	6 A		50 mA
Maximum switching voltage	440 VAC, 125 VDC		30 VAC, 36 VDC
Maximum switching current	6 A		50 mA
Maximum switching power	1,500 VA 180 W	500 VA 60 W	–
Failure rate P value (reference value) *1	10 mA at 5 VDC		1 mA at 100 mVDC

✻1. P level: $\lambda_{60}=0.1\times10^{-6}$/times
This value is the value in switching frequency 120 operations/min.

✻2. If the Au plating layer is destroyed, the number will be the same as the standard type.

Characteristics

Item		Standard (G2RV-SR700, 500, 701, 501)	For microloads (G2RV-SR700-AP, 500-AP)
Contact resistance *		100 m Ω max.	
Operate (Set) time *		20 ms max.	
Release time *		AC, AC/DC: 40 ms max. DC: 20 ms max.	
Maximum operating frequency		Mechanical: 18,000 operations/h Electrical: 1,800 operations/h (rated load)	
Insulation resistance		1,000 MΩ min. (at 500 VDC)	
Dielectric strength		Between coil and contacts: 4,000VAC 50/60 Hz 1 min Contact between the same polarity: 1,000 VAC 50/60 Hz 1 min	
Vibration resistance		Destruction: 10 to 55 to 10 Hz, single amplitude 0.50 mm (double amplitude 1.0 mm) Malfunction: 10 to 55 to 10 Hz, single amplitude 0.50 mm (double amplitude 1.0 mm)	
Shock resistance		Destruction: 1,000 m/s^2 Malfunction: Energized 200m/s^2, Non-energized 100m/s^2	
Endurance *	**Mechanical**	5,000,000 operations min.	
	Electrical	NO contact: 70,000 operations min. NC contact: 50,000 operations min.	5,000,000 operations min.
Ambient operating temperature		Operating: –40 to +55°C (with no icing or condensation)	
Ambient operating humidity		Operating: 5 to 85% RH	
Weight		Approx. 30 g	
Contact material		Ag alloy	Ag alloy + Au plating

Note: Above values are initial values.

✻ Value is at ambient temperature of 23°C.

Approved standards

UL508 (file No.E41643)

Model	No. of poles	Operation coil ratings	Contact ratings	Operations
G2RV-SR series	SPDT	12 to 48 VDC 24 to 230 VAC	6 A at 250 VAC (Resistive load) 6 A at 30 VDC (Resistive load) 2 A at 400 VAC (Resistive load)*	6,000

* If the load voltage exceeds 250 VAC, please attach with a spacing of 12 mm min., or use a separate plate (XW5Z-EP12).

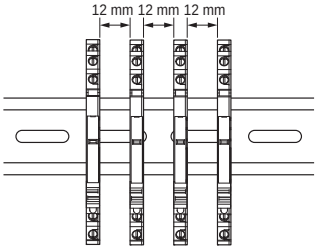

TÜV (EN 61810-1)

Model	No. of poles	Operation coil ratings	Contact ratings	Operations
G2RV-SR series	SPDT	12, 24 VDC 24, 48 VAC/VDC 100, 110, 200, 230 VAC	6 A at 250 VAC (Resistive load) 6 A at 30 VDC (Resistive load) 2 A at 400 VAC (Resistive load)*	50,000 50,000 6,000

* If the load voltage exceeds 250 VAC, please attach with a spacing of 12 mm min., or use a separate plate (XW5Z-EP12).

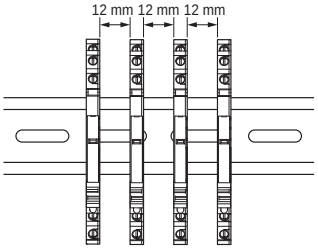

Engineering Data

Endurance curve (N.O. side)

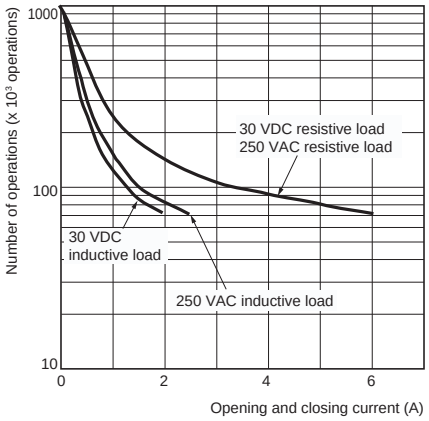

Switching capacity of DC resistive load

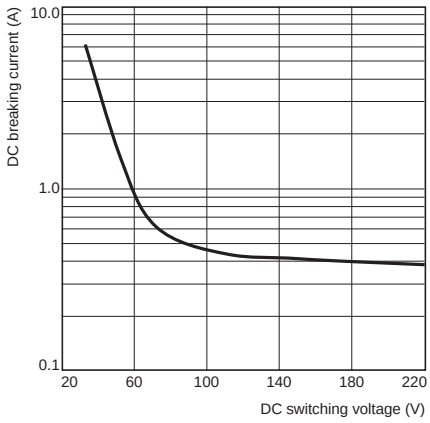

Dimensions

(unit: mm)

Slim I/O Relay + socket

Push-In Plus Terminal Block

Models without latching lever (without test switch)
G2RV-SR500
G2RV-SR500-AP

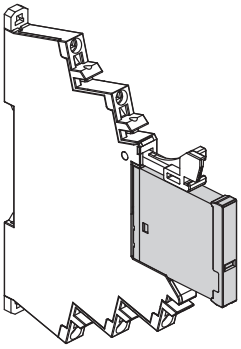

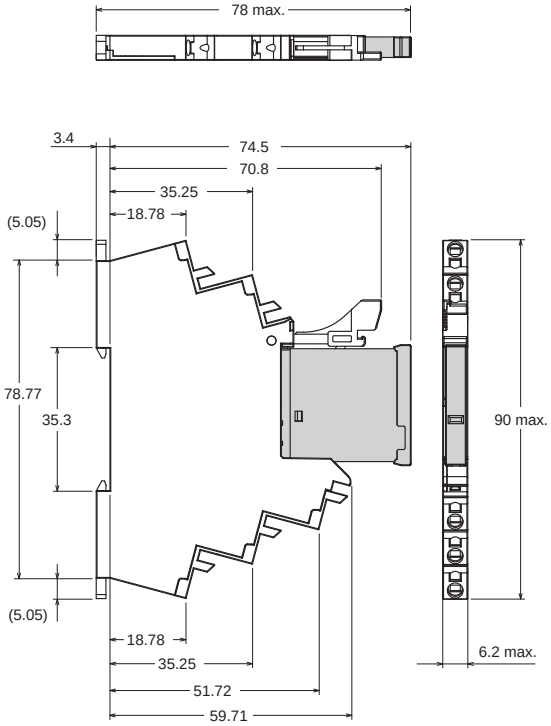

Terminal Arrangement/Internal Connection Diagram (TOP VIEW)

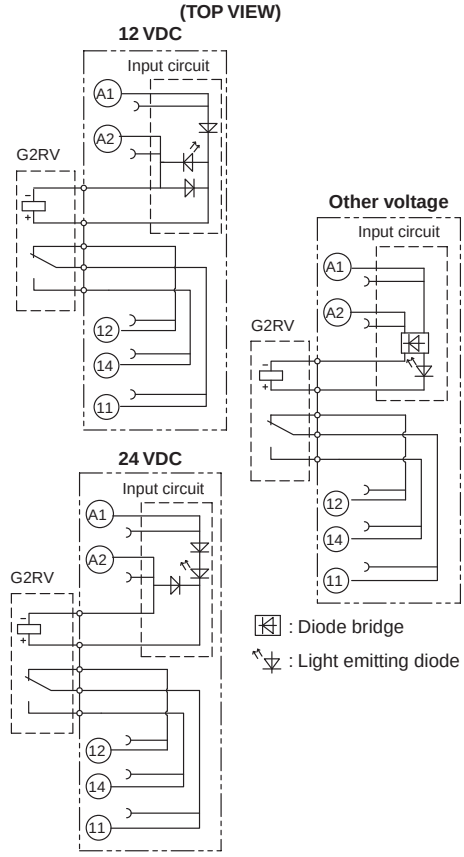

Models with latching lever (with test switch)
G2RV-SR501

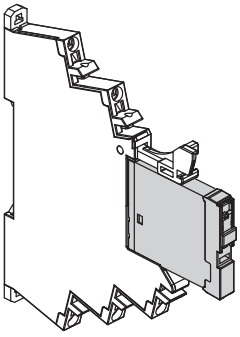

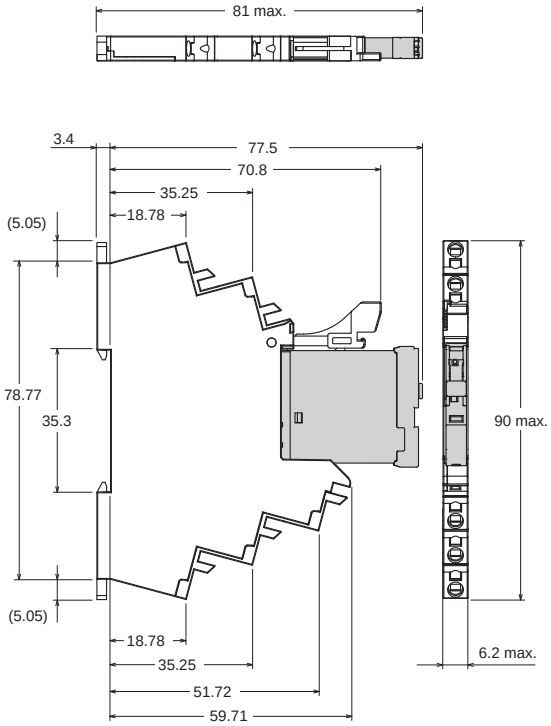

Terminal Arrangement/Internal Connection Diagram (TOP VIEW)

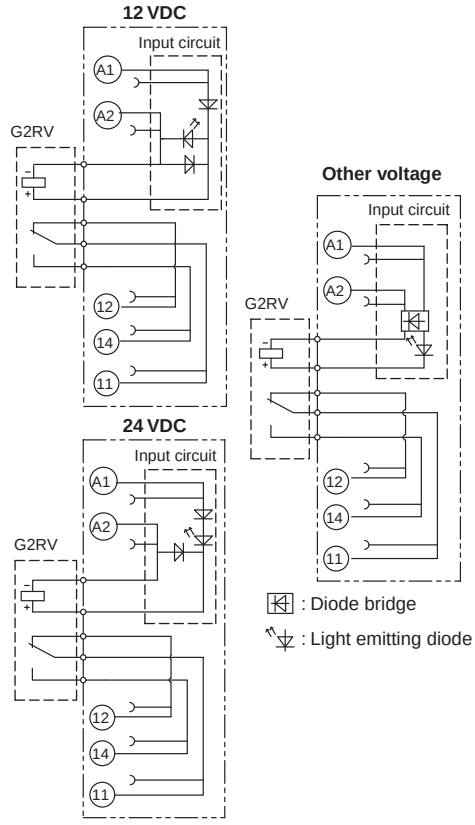

Screw terminal

Models without latching lever (without test switch)
G2RV-SR700
G2RV-SR700-AP

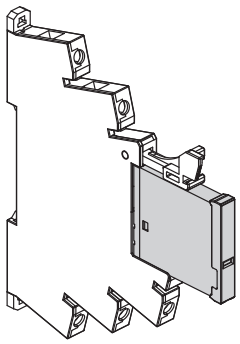

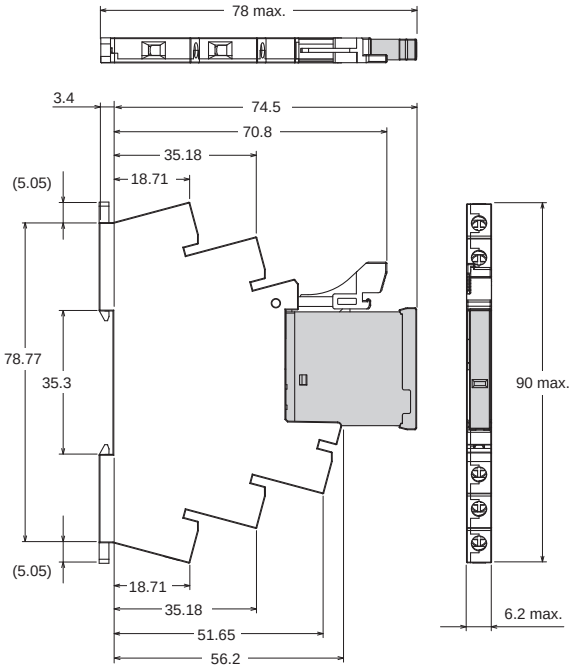

Terminal Arrangement/Internal Connection Diagram (TOP VIEW)

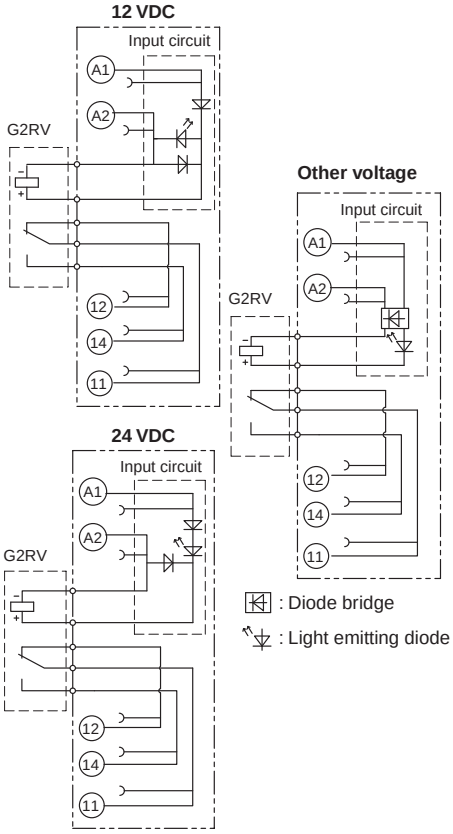

Models with latching lever (with test switch)
G2RV-SR701

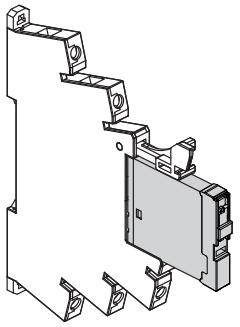

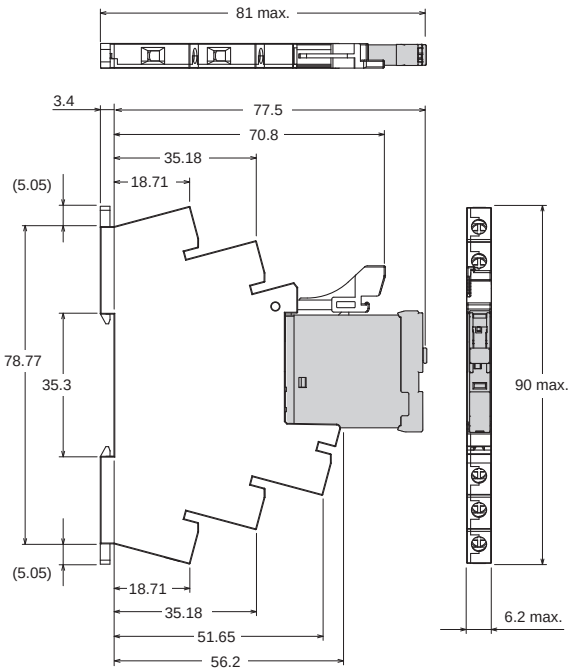

Terminal Arrangement/Internal Connection Diagram (TOP VIEW)

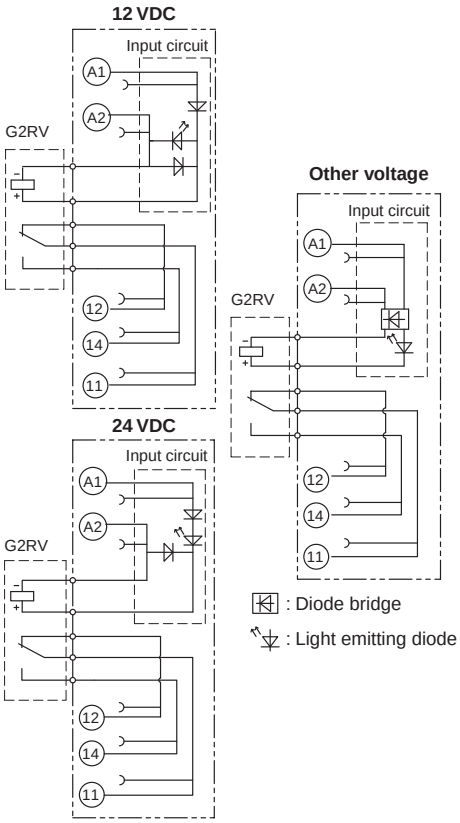

Relay for maintenance

Models without latching lever
G2RV-1-S-G
G2RV-1-S-AP-G

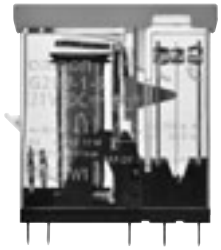

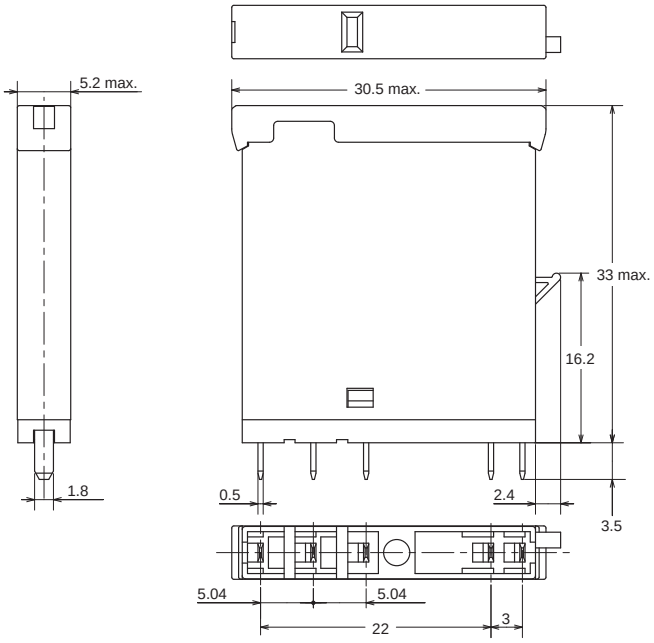

Terminal Arrangement/ Internal Connection Diagram (TOP VIEW)

(Input circuit)

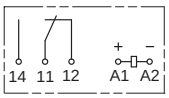

Models with latching lever (test switch)
G2RV-1-SI-G

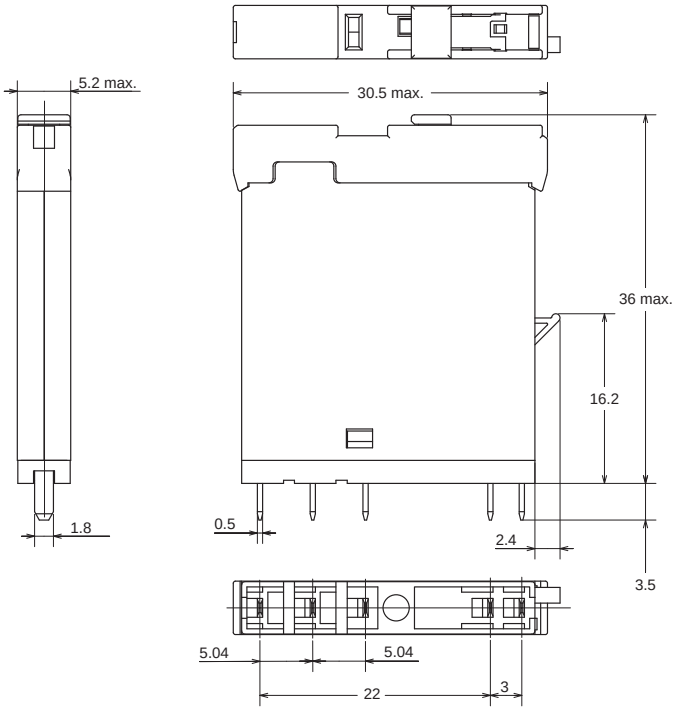

Terminal Arrangement/ Internal Connection Diagram (TOP VIEW)

(Input circuit)

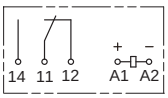

Slim I/O Solid State Relay
G3RV-SR

Global standard size, low profile type slim I/O solid state relay with width 6.2 mm.

For the recent information on models that have been certified for safety standards, refer to your OMRON website.

- Realized about 25% lower profile than conventional products, contributing to further miniaturization of the control panel.
- Optimal slim, high frequency, high-speed opening and closing SSR (solid state relay).
- Realized a slim shape with a switching capacity up to 3 A (DC), and 2 A (AC).
- Because MOSFET is used for the outlet element for the DC load, opening and closing load of 100 μA to 3 A is possible.
- Check operating status at a glance at the operating display LED.
- Mounted I/O SSR (solid-state relay) uses plug-in terminals that are difficult to bend when exchanging.
- G2RV-SR featuring a general-purpose relay similar in shape to G3RV-SR also available.

⚠ Refer to *Safety Precautions* on page 20.

Features

Push-In Plus technology

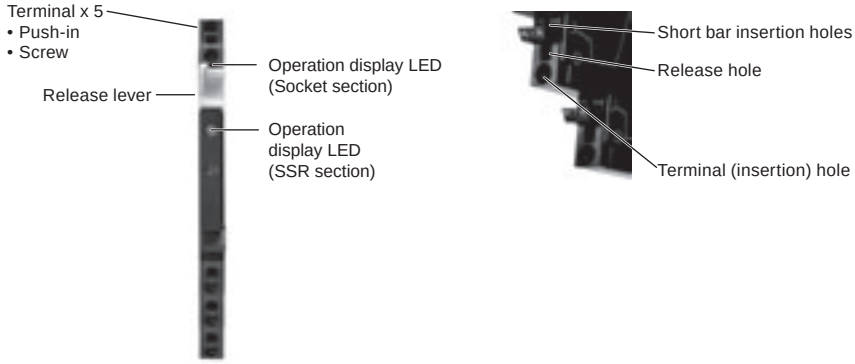

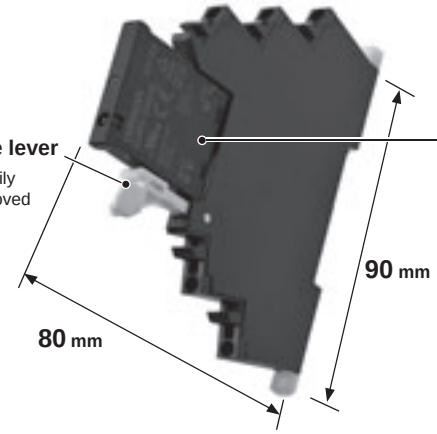

Plug-in terminal
Peace of mind as the terminal does not bend when replacing

Model Number Structure

Model Number Legend

G3RV-SR □□□ - □ □

(1) (2) (3) (4) (5)

(1) Basic model name
G3RV: Slim I/O Solid State Relay

(2) Sub type
SR: Slim solid relay + integrated low profile socket

(3) Terminal (wire connection)
500: Push-In Plus Terminal
700: Screw terminal

(4) Output voltage specification
A : AC output (triac) zero cross function available
AL : AC output (triac) zero cross function not available
D : DC output (MOS FET)

(5) Rated voltage input
12, 24 VDC
24, 48 VAC/VDC
100, 110, 200, 230 VAC

Ordering Information

Terminal (wire connection)	Applicable output load	Zero cross function	Rated input voltage (V)		Model
Push-In Plus Terminal	DC load	—	DC	12	**G3RV-SR500-D DC12**
				24	**G3RV-SR500-D DC24**
			AC/DC	24	**G3RV-SR500-D AC/DC24**
				48	**G3RV-SR500-D AC/DC48**
			AC	100	**G3RV-SR500-D AC100**
				110	**G3RV-SR500-D AC110**
				200	**G3RV-SR500-D AC200**
				230	**G3RV-SR500-D AC230**
	AC load	Yes	DC	12	**G3RV-SR500-A DC12**
				24	**G3RV-SR500-A DC24**
			AC/DC	24	**G3RV-SR500-A AC/DC24**
				48	**G3RV-SR500-A AC/DC48**
			AC	100	**G3RV-SR500-A AC100**
				110	**G3RV-SR500-A AC110**
				200	**G3RV-SR500-A AC200**
				230	**G3RV-SR500-A AC230**
		No	DC	12	**G3RV-SR500-AL DC12**
				24	**G3RV-SR500-AL DC24**
			AC/DC	24	**G3RV-SR500-AL AC/DC24**
				48	**G3RV-SR500-AL AC/DC48**
			AC	100	**G3RV-SR500-AL AC100**
				110	**G3RV-SR500-AL AC110**
				200	**G3RV-SR500-AL AC200**
				230	**G3RV-SR500-AL AC230**
Screw terminal	DC load	—	DC	12	**G3RV-SR700-D DC12**
				24	**G3RV-SR700-D DC24**
			AC/DC	24	**G3RV-SR700-D AC/DC24**
				48	**G3RV-SR700-D AC/DC48**
			AC	100	**G3RV-SR700-D AC100**
				110	**G3RV-SR700-D AC110**
				200	**G3RV-SR700-D AC200**
				230	**G3RV-SR700-D AC230**
	AC load	Yes	DC	12	**G3RV-SR700-A DC12**
				24	**G3RV-SR700-A DC24**
			AC/DC	24	**G3RV-SR700-A AC/DC24**
				48	**G3RV-SR700-A AC/DC48**
			AC	100	**G3RV-SR700-A AC100**
				110	**G3RV-SR700-A AC110**
				200	**G3RV-SR700-A AC200**
				230	**G3RV-SR700-A AC230**
		No	DC	12	**G3RV-SR700-AL DC12**
				24	**G3RV-SR700-AL DC24**
			AC/DC	24	**G3RV-SR700-AL AC/DC24**
				48	**G3RV-SR700-AL AC/DC48**
			AC	100	**G3RV-SR700-AL AC100**
				110	**G3RV-SR700-AL AC110**
				200	**G3RV-SR700-AL AC200**
				230	**G3RV-SR700-AL AC230**

Note: Sockets are not sold individually.

Solid state relay for maintenance

Model Number Legend

G3RV-□ □ S □ □
(1) (2) (3) (4) (5)

(1) Output voltage specification
D: DC output
2: AC output

(2) Rated current
02: AC output 2 A
03: DC output 3 A

(3) Terminal
S: Plug-in type

(4) Zero cross functions
Blank: Zero cross function available
L: Zero cross function not available

(5) Rated input voltage
Number: 12, 24, 48 VDC

List of Models

Insulation method	Operation Display	Output (SSR)	Zero cross Function	Rated output Load *	Rated input voltage (socket)	Model	Applicable model
Photo-triac	Yes (green)	AC	Yes	2 A (at 100 to 240 VAC)	12 VDC	**G3RV-202S DC12**	G3RV-SR700/500-A DC12V
					24 VDC	**G3RV-202S DC24**	G3RV-SR700/500-A DC24V
					24 VAC/VDC		G3RV-SR700/500-A AC/DC24V
					48 VAC/VDC	**G3RV-202S DC48**	G3RV-SR700/500-A AC/DC48V
					100 VAC		G3RV-SR700/500-A AC100V
					110 VAC		G3RV-SR700/500-A AC110V
					200 VAC		G3RV-SR700/500-A AC200V
					230 VAC		G3RV-SR700/500-A AC230V
			No		12 VDC	**G3RV-202SL DC12**	G3RV-SR700/500-AL DC12V
					24 VDC	**G3RV-202SL DC24**	G3RV-SR700/500-AL DC24V
					24 VAC/VDC		G3RV-SR700/500-AL AC/DC24V
					48 VAC/VDC	**G3RV-202SL DC48**	G3RV-SR700/500-AL AC/DC48V
					100 VAC		G3RV-SR700/500-AL AC100V
					110 VAC		G3RV-SR700/500-AL AC110V
					200 VAC		G3RV-SR700/500-AL AC200V
					230 VAC		G3RV-SR700/500-AL AC230V
Photo-voltage coupler		DC	–	3 A (at 5 to 24 VDC)	12 VDC	**G3RV-D03SL DC12**	G3RV-SR700/500-D DC12V
					24 VDC	**G3RV-D03SL DC24**	G3RV-SR700/500-D DC24V
					24 VAC/VDC		G3RV-SR700/500-D AC/DC24V
					48 VAC/VDC	**G3RV-D03SL DC48**	G3RV-SR700/500-D AC/DC48V
					100 VAC		G3RV-SR700/500-D AC100V
					110 VAC		G3RV-SR700/500-D AC110V
					200 VAC		G3RV-SR700/500-D AC200V
					230 VAC		G3RV-SR700/500-D AC230V

* Different depending on the ambient temperature.
For more details, refer to *Load current vs. ambient rated temperature* on page 16.

Accessories (order separately)

Refer to page 25 for G2RV-SR/G3VR-SR Common Accessories.

Specifications

Rating (ambient temperature 25°C)

Input

G3RV-SR700/500-A series

Rated input voltage	Rated current			Must operate voltage	Must release voltage	Input voltage
	AC		DC			Percentage of the rated voltage
	50 Hz	60 Hz				
12 VDC	–	–	15.0 mA	10.8 V max.	1 V min.	±10%
24 VDC	–	–	12.0 mA	21.6 V max.		
24 VAC/VDC	11.3 mA	11.4 mA	11.0 mA	21.6 V max.		
48 VAC/VDC	6.8 mA	6.9 mA	6.0 mA	43.2 V max.		
100 VAC	6.2 mA	6.2 mA	–	90 V max.		
110 VAC	6.2 mA	6.2 mA	–	99 V max.		
200 VAC	6.7 mA	7.9 mA	–	180 V max.		
230 VAC	7.5 mA	8.8 mA	–	207 V max.		

G3RV-SR700/500-AL series

Rated input voltage	Rated current			Must operate voltage	Must release voltage	Input voltage
	AC		DC			Percentage of the rated voltage
	50 Hz	60 Hz				
12 VDC	–	–	15.0 mA	10.8 V max.	1 V min.	±10%
24 VDC	–	–	12.0 mA	21.6 V max.		
24 VAC/VDC	11.4 mA	11.5 mA	11.0 mA	21.6 V max.		
48 VAC/VDC	7.7 mA	7.7 mA	6.9 mA	43.2 V max.		
100 VAC	7.3 mA	7.3 mA	–	90 V max.		
110 VAC	7.3 mA	7.3 mA	–	99 V max.		
200 VAC	7.0 mA	8.1 mA	–	180 V max.		
230 VAC	7.7 mA	8.9 mA	–	207 V max.		

G3RV-SR700/500-D series

Rated input voltage	Rated current			Must operate voltage	Must release voltage	Input voltage
	AC		DC			Percentage of the rated voltage
	50 Hz	60 Hz				
12 VDC	–	–	8.0 mA	10.8 V max.	1 V min.	±10%
24 VDC	–	–	4.6 mA	21.6 V max.		
24 VAC/VDC	5.0 mA	5.1 mA	4.3 mA	21.6 V max.		
48 VAC/VDC	6.8 mA	6.9 mA	6.0 mA	43.2 V max.		
100 VAC	6.2 mA	6.2 mA	–	90 V max.		
110 VAC	6.2 mA	6.2 mA	–	99 V max.		
200 VAC	6.7 mA	7.9 mA	–	180 V max.		
230 VAC	7.5 mA	8.8 mA	–	207 V max.		

Output

Item	G3RV-SR700/500-A(L)	G3RV-SR700/500-D
Rated load voltage	100 to 240 VAC (50/60 Hz)	5 to 24 VDC
Load voltage range	75 to 264 VAC (50/60 Hz)	3 to 26.4 VDC
Load current	0.1 to 2 A (Ambient temperature=25°C)	100 µA to 3 A (Ambient temperature=25°C)
Inrush current resistance	30 A (60 Hz, 1 cycle)	30 A (60 Hz, 1 cycle)
Permissible I^2t; Joule integral value (reference value)	$15A^2s$	$9\ A^2\ s$
Applied load capacity	400 W (Output voltage: 200 VAC)	72 W (Output voltage: 24 VDC)

Characteristics

Item	G3RV-SR700/500-A	G3RV-SR700/500-AL	G3RV-SR700/500-D
Operate time	1/2 cycle of load power supply +1 ms max.	3 ms max.	6 ms max.
Release time	60 ms max.	60 ms max.	60 ms max.
Output ON voltage drop	1.6 V (RMS) max.		–
Output ON resistance	–		0.3 Ω max. (at 24 VDC)
Leaked current	5 mA max. (at 200 VAC, 50/60 Hz)		10 µA max. (at 24 VDC)
Insulation resistance	100 MΩ min. (at 500 VDC)		
Dielectric strength	Between input and output 2,500 VAC 50/60 Hz 1 min		
Vibration resistance	Malfunction: 10 to 55 to 10 Hz double amplitude 0.70 mm		
Shock resistance	300m/s^2		
Ambient operating temperature	Storage: –30 to +100°C (with no icing or no condensation) Operating: –30 to +55°C (with no icing or no condensation)		
Ambient operating humidity	45 to 85% RH		
Weight	Approx. 38 g		
Pollution degree	2		
The degree of protection by IEC60529	IP20		
Rated impulse dielectric strength	4.0 kV/III		
Load category	LC-A		DC-12
Overload current profile	1.5Ie 1.1Ue 5s ON, 10s OFF, 10 cycles		
Rated insulation voltage	240 V		

Approved standards

UL 508 (file No.E64562)

Model	Input ratings	Contact ratings
G3RV-SR700/500-D series	12, 24 VDC 24, 48 VAC/VDC 100, 110, 200, 230 VAC	24 VDC 3 A (resistive load) at 25°C
G3RV-SR700/500-A(L) series	12, 24 VDC 24, 48 VAC/DC 100, 110, 200, 230 VAC	240 VAC 2 A (resistive load) at 25°C

TÜV(EN 62314)

Model	Input ratings	Contact ratings
G3RV-SR700/500-D series	12, 24 VDC 24, 48 VAC/VDC 100, 110, 200, 230 VAC	24 VDC 3 A (resistive load)
G3RV-SR700/500-A(L) series	12, 24 VDC 24, 48 VAC/VDC 100, 110, 200, 230 VAC	240 VAC 2 A (resistive load)

Engineering Data

Load current vs. ambient rated temperature

G3RV-SR700/500-A(L) series

Product mounting spacing 10 mm (Separate Mounting)

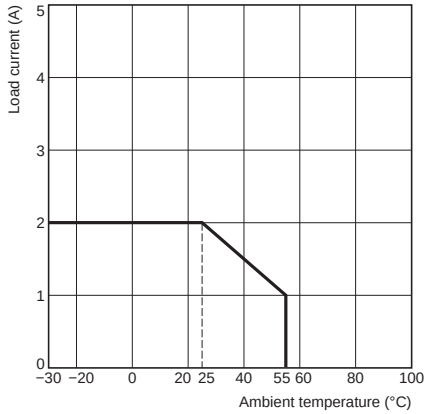

Close mounting (up to 5 units *)

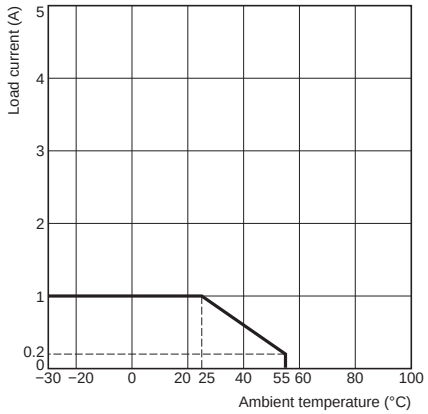

G3RV-SR700/500-D series

Product mounting spacing 10 mm (Separate Mounting)

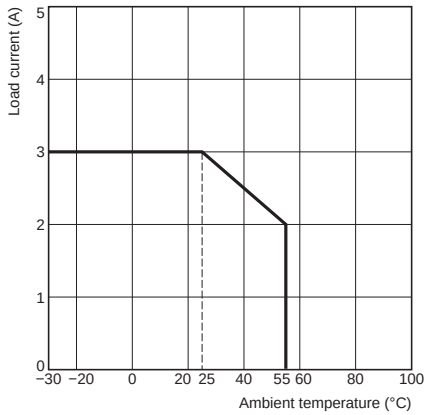

Close mounting (up to 5 units *)

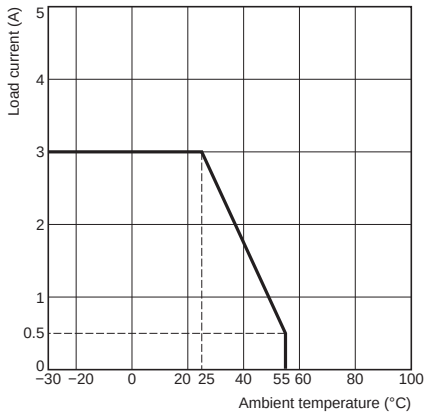

✻ When five or more are installed, install with 10 mm space between each.
For details, please refer to *Mounting* on page 23.

Inrush Current Resistance: Non-repetitive

Keep the inrush current to below the inrush current resistance value (i.e., below the broken line) if it occurs repetitively.

G3RV-SR700/500-A(L) series

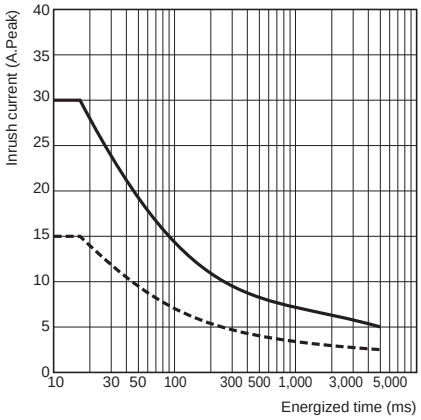

G3RV-SR700/500-D series

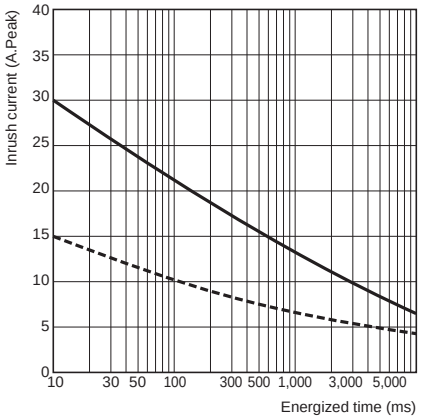

Dimensions

(unit: mm)

Solid state relay + socket

Push-In Plus Terminal Block

G3RV-SR500

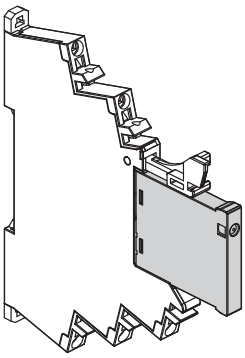

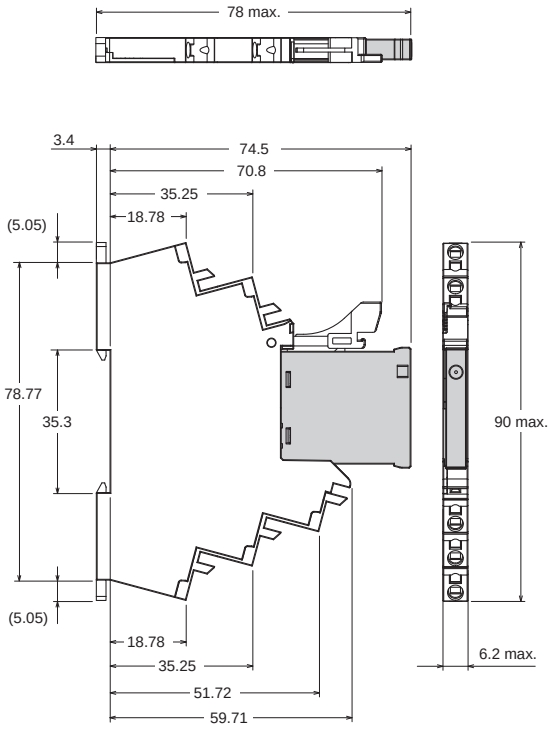

Terminal Arrangement/ Internal Connection Diagram (TOP VIEW)

12 VDC

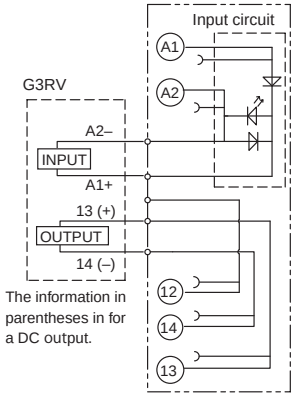

24 VDC

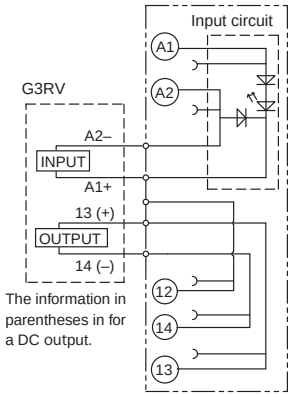

Other voltage

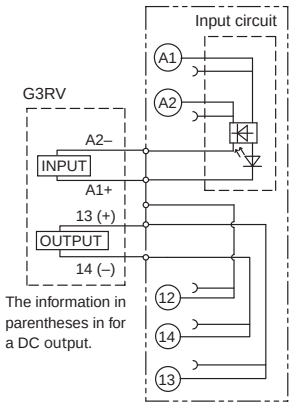

: Diode bridge

: Light emitting diode

Screw terminal
G3RV-SR700

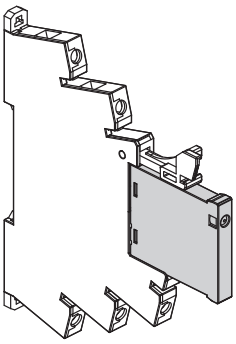

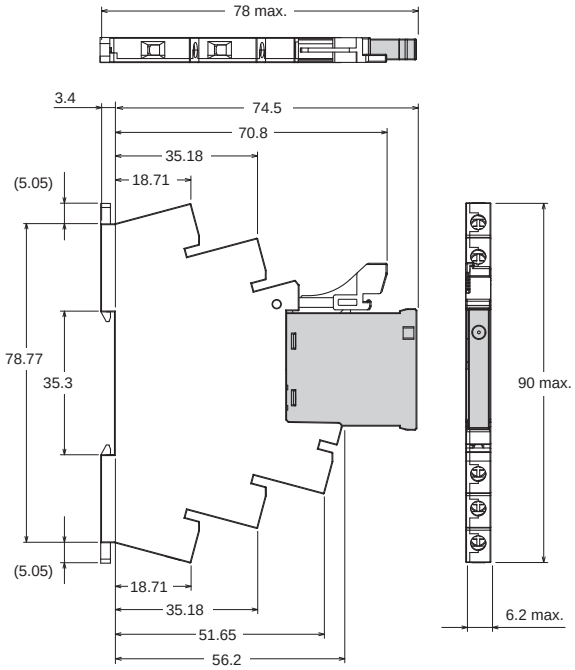

Terminal Arrangement/
Internal Connection Diagram
(TOP VIEW)

12 VDC

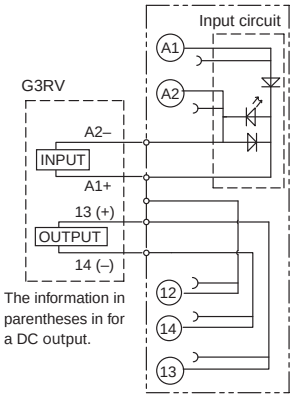

24 VDC

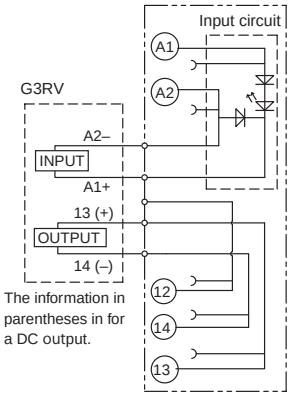

Other voltage

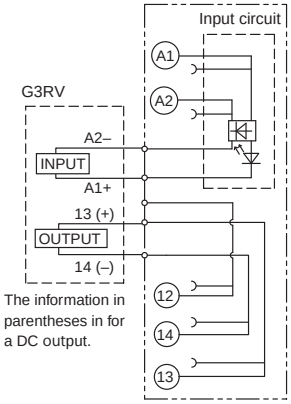

: Diode bridge

: Light emitting diode

Solid state relay for maintenance

G3RV-D03SL
G3RV-202S(L)

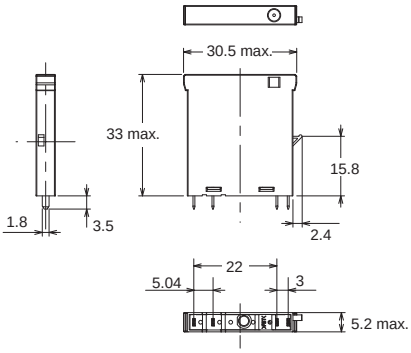

Terminal Arrangement/
Internal Connection Diagram
(TOP VIEW)

G3RV-D03SL (input circuit)

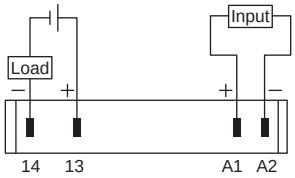

G3RV-202S(L) (input circuit)

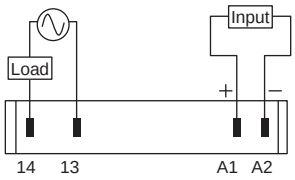

Safety Precautions

Be sure to read the *Safety Precautions for All Relays* in the website at the following URL: http://www.ia.omron.com/.

Format of Warning Indications

WARNING	Indicates a potentially hazardous situation which, if not avoided, will result in minor or moderate injury, or may result in serious injury or death. Additionally, there may be significant property damage.
CAUTION	Indicates a potentially hazardous situation which, if not avoided, may result in minor or moderate injury or in property damage.
Precautions for Safe Use	Indicates supplementary comments on what to do or avoid doing, to use the product safety.
Precautions for Correct Use	Includes operating precautions to ensure that the product will operate properly and that performance and functions will not be adversely affected.

Meaning of Graphic Symbols for Ensuring Product Safety

	Indicates the possibility of electric shock under specific conditions.
	Used for general CAUTION, WARNING, or DANGER precautions for which there is no specified symbol. (This symbol is also used as the alerting symbol, but shall not be used in this meaning on the product.)
	Indicates the possibility of explosion or rupture under specific conditions.
	Indicates the possibility of injuries by high temperature under specific conditions.

WARNING

Ensure that the socket is not charged during wiring and maintenance. Not doing so may result in electric shock.

Do not touch the terminal section of the G2RV-SR or the surrounding area while the power is being supplied. Doing so may result in electric shock.

CAUTION

Minor electrical shock may occasionally occur.
Do not touch the G3RV terminal section (i.e., current carrying parts) while the power is being supplied.

The G3RV may rupture if short-circuit current flows.
As protection against accidents due to short-circuiting, be sure to install protective devices, such as fuses and no-fuse breakers, on the power supply side.

Minor electrical shock may occasionally occur.
Do not touch the main circuit terminals on the G3RV immediately after the power supply has been turned OFF.
Shock may result due to the electrical charge stored in the built-in snubber circuit.
Note: G3RV-202S(L), G3RV-SR500/700-A(L) series models only

Minor burns may occasionally occur.
Do not touch the G3RV or the heat sink while the power is being supplied or immediately after the power supply has been turned OFF.
The G3RV becomes extremely hot.

Provide a space of at least 3 mm between the G2RV-SR and ground. Not doing so may result in a ground fault.

Precautions for Safe Use

Transport

- Do not use the product if it has been dropped on the ground. Dropping the product may adversely affect performance.
- Do not drop the product or subject it to abnormal vibration or shock during transportation or mounting. Doing so may result in deterioration of performance, malfunction, or failure.
- Do not transport the product without it being packaged. Doing so may result in damage, malfunction, or failure.
- Do not transport the G3RV under the following conditions. Doing so may result in damage, malfunction, or deterioration of performance characteristics.
  - High temperature, high humidity conditions
  - Conditions such as temperature change that causes rapid condensation
  - Condition where it is not packaged

Operating and Storage Environments

- Do not use or store the product in the following locations. Doing so may result in damage, malfunction, or deterioration of performance characteristics.
  - Do not store in locations subject to ambient storage temperatures outside the range –40 to 70°C (for G2RV) and outside the range –30 to 100°C (for G3RV).
  - Locations subject to relative humidity outside the range 5% to 85% (for G2RV) and outside the range 45% to 85% (for G3RV).
  - Locations subject to high temperature or high humidity.
  - Conditions such as temperature change that causes rapid condensation
  - Locations where corrosive gases or flammable gases are present
  - Location where rainwater or water droplets gets splashed
  - Location with splashes of water, oil, and chemicals, etc.
  - Locations with much dust, salt, and iron powder
  - Location with blockers
  - Where static electricity or noise occurs
  - Where strong electromagnetic field is generated
  - Where there is a risk of exposure to radioactivity
- Do not use or store Sockets in environments that contain silicone gas, sulfidizing gas (e.g., SO_2 or H_2S), or organic gas, or near materials that contain silicone. Doing so may cause the contacts to be unstable or to fail.

Handling <G3RV>

- Keep the G3RV well ventilated.
  There is a risk of short-circuiting or burning due to G3RV overheating.

Mounting

- Before you start wiring, please make sure that the socket is securely attached to the mounting rail. If the socket is unstable, it may come loose and risk of injury towards the workers.
- Please insert the flat-blade screwdriver to the bottom of the hole. If you do not insert the flat-blade screwdriver correctly, the cable will not be connected correctly.
- When lubricant such as oil is attached to the tip of the driver, the driver will fall off, with a risk of injury towards the workers.
- Do not tilt the G2RV-SR/G3RV-SR after mounting to the support rail. Doing so may apply excessive force to the mounting portion, possibly damaging the product. Attach end plates (PFP-M) to sandwich the product and hold it in place.

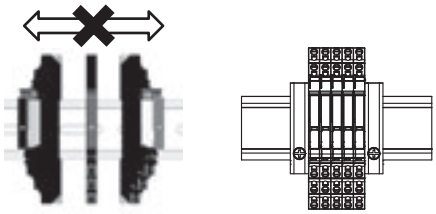

Usage

- Please select the load within the rated range. Doing so may result in damage, malfunction, or failure.
- Please use the power of the rated frequency. It may cause malfunction, failure, or risk of burnout.

<G3RV>

- Install G3RV according to instructions *Mounting* on page 23. If you install in the wrong direction, abnormal heat is generated, and may lead to short-circuiting or burning the output element.
- G3RV is an SSR that generates heat. Please observe the ambient temperature setting range of G3RV. If installing in an enclosed space, set a fan, and ventilate.
- When mounting G3RV to DIN rail, firmly fits into the groove. If it is not properly installed, there is a risk of it falling.

Wiring

- For the current to be applied, make sure a wire size with margin is used. Otherwise, excessive heat generated by the wires may cause burning.
- Do not attempt to use the wire if the coat is torn. Not doing so may result in electric shock.
- Always turn OFF the power supply before performing wiring. Not doing so may cause electrical shock.

<G3RV>

- The wires of the socket for G3RV socket should not be passed through the same duct as that being connected to the high-voltage power supply. Otherwise, inductive noise may damage the G3RV or cause it to malfunction.

Push-In Plus Terminal Block

- Do not wire anything to the release holes.
- Do not tilt or twist a flat-blade screwdriver while it is inserted into a release hole on the terminal block. The terminal block may be damaged.
- Insert a flat-blade screwdriver into the release holes at an angle. The terminal block may be damaged if you insert the screwdriver straight in.
- Do not allow the flat-blade screwdriver to fall out while it is inserted into a release hole.
- Do not bend the wire past its natural bending radius or pull on it with excessive force. Doing so may cause the wire disconnection.
- Do not insert more than one wire into each terminal (insertion) hole.
- To prevent wiring materials from smoking or ignition, confirm wire ratings and use the wiring materials given in the following table.

Recommended Wire	Stripping length (Ferrules not used)
0.5 to 1.5 mm^2/AWG20 to AWG16	8 mm

Disposal

- When disposing of the product, do not put into the fire.

Precautions for Correct Use

- Do not use or store the product in the following locations. Doing so may result in damage, malfunction, or deterioration of performance characteristics.
  - Where vibration or shock is directly transmitted to the body
  - Where the socket could come into contact with a solvent or alkaline agent
- Insert the short bar into the insertion hole in the correct orientation, and insert until all terminals are all the way in.
- If using a short bar, install the short bar before performing wiring work.
- A push-in Plus terminal block type and a screw terminal type have different insertion positions, so a mixed installation using the same short bar is not possible.

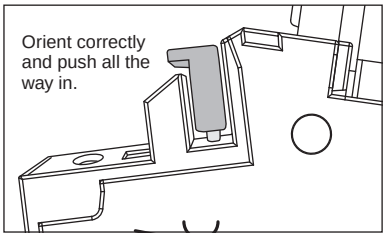

Completely inserted
All terminals are inserted all the way in.

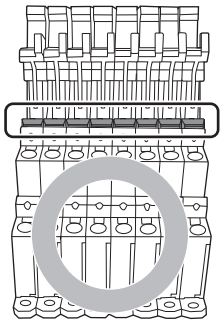

Incomplete insertion
All terminals are not inserted all the way in.

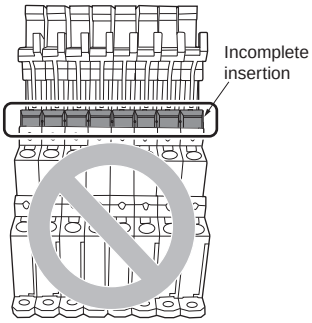

Incorrect installation
Some terminals not inserted completely.

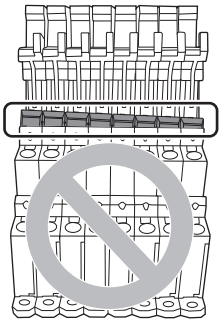

- Do not insert short bar in the hole for wire or screw driver, it may cause the result of failure of pull out.
  If insert short bar in the hole for wire or screw driver and try to pull out, it may cause damage for short bar or socket and failure in electric conductivity.
- Please insert P2RVC terminal into the short bar insertion hole of G2RV-SR/G3RV-SR. If insert P2RVC into the release hole or terminal (insertion) hole wrongly, P2RVC may stuck and can not remove and it may cause result of damage on P2RVC and G2RV-SR/G3RV-SR.

Push-In Plus Terminal Block

1. Connecting Wires to the Push-In Plus Terminal Block

Part Names of the Terminal Block

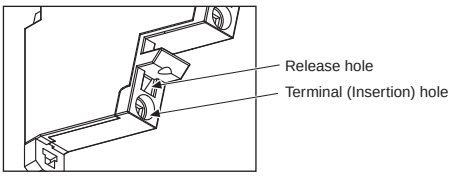

Connecting Wires with Ferrules and Solid Wires

Insert the solid wire or ferrule straight into the terminal block until the end strikes the terminal block.

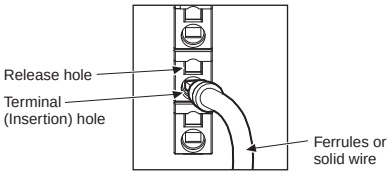

- If a wire is difficult to connect because it is too thin, use a flat-blade screwdriver in the same way as when connecting stranded wire.

Connecting Stranded Wires

Use the following procedure to connect the wires to the terminal block.

(1) Hold a flat-blade screwdriver at an angle and insert it into the release hole.
The angle should be between 10°and15°. If the flat-blade screwdriver is inserted correctly, you will feel the spring in the release hole respond.
(2) With the flat-blade screwdriver still inserted into the release hole, insert the wire into the terminal hole until it strikes the terminal block.
(3) Remove the flat-blade screwdriver from the release hole.

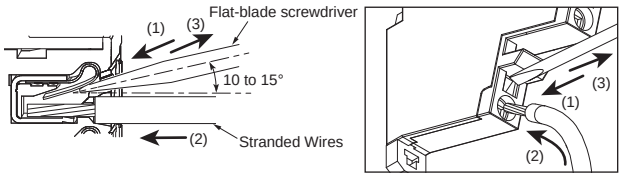

Checking Connections

- After insertion, pull gently on the wire to make sure that it will not come out (i.e., to confirm that it is held by the terminal block).
- If you use a ferrule with a conductor length of 10 mm, part of the conductor may be visible after the ferrule is inserted into the terminal block, but the product insulation distance will still be satisfied.

2. Removing Wires from the Push-In Plus Terminal Block

Use the following procedure to remove wires from the terminal block. The same method is used to remove stranded wires, solid wires, and ferrules.

(1) Hold a flat-blade screwdriver at an angle and insert it into the release hole.
(2) With the flat-blade screwdriver still inserted into the release hole, remove the wire from the terminal insertion hole.
(3) Remove the flat-blade screwdriver from the release hole.

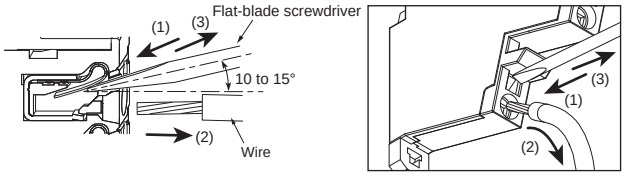

3. Recommended ferrules and tools

Recommended ferrules

Applicable wire		Ferrules Conduct length (mm)	Stripping length (mm) (Ferrules used)	Recommended ferrules		
(mm^2)	(AWG)			Phoenix Contact product	Weidmuller product	Wago product
0.25	24	8	10	AI 0,25-8	H0.25/12	216-301
		10	12	AI 0,25-10	---	---
0.34	22	8	10	AI 0,34-8	H0.34/12	216-302
		10	12	AI 0,34-10	---	---
0.5	20	8	10	AI 0,5-8	H0.5/14	216-201
		10	12	AI 0,5-10	H0.5/16	216-241
0.75	18	8	10	AI 0,75-8	H0.75/14	216-202
		10	12	AI 0,75-10	H0.75/16	216-242
1/1.25	18/17	8	10	AI 1-8	H1.0/14	216-203
		10	12	AI 1-10	H1.0/16	216-243
1.25/1.5	17/16	8	10	AI 1,5-8	H1.5/14	216-204
		10	12	AI 1,5-10	H1.5/16	216-244
Recommended crimp tool				CRIMPFOX6 CRIMPFOX6T-F CRIMPFOX10S	PZ6 roto	Variocrimp4

Note: 1. Make sure that the outer diameter of the wire is smaller than the inner diameter of the insulating sleeve of the recommended ferrule.

2. Make sure that the ferrule processing dimensions conform to the following figure.

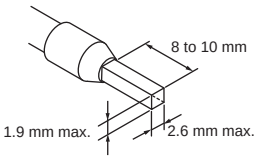

3. If you use AWG24 to AWG22 (0.25 to 0.34 mm^2) wires, UL certification will not apply.

Recommended Flat-blade Screwdriver

Use a flat-blade screwdriver to connect and remove wires.
Use the following flat-blade screwdriver.
The following table is the manufacturer and format at the time in December 2015.

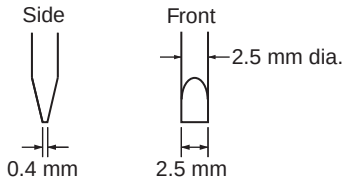

Model	Manufacturer
ESD0.40×2.5	Wera
SZS 0.4×2.5 SZF 0-0.4×2.5 ✻	Phoenix Contact
0.4×2.5×75 302	Wiha
AEF.2.5×75	Facom
210-719	Wago
SDI 0.4×2.5×75	Weidmuller

✻ OMRON's exclusive purchase model XW4Z-00B is available to order as SZF 0-0.4×2.5 (manufactured by Phoenix Contact).

Screw Terminal

• Screw terminal

Wired type	Applicable wire size	Stripping length
Stranded wires, without ferrule	0.5 to 1.5 mm^2	8 mm
Stranded wires, with ferrule and plastic collar	0.5 to 1.5 mm^2	8 mm
Stranded wires with ferrule, without plastic collar	0.5 to 1.5 mm^2	8 mm
Single wire	0.5 to 1.5 mm^2	8 mm

• Tightening Torque
0.4 N • m

• Electric wiring

Use the electric wire of specified size as shown above. The length of the that is not covered is 8 mm.

Stripping length

<G2RV>

Operating latching lever (test switch)

When operating the latching lever for G2RV-SR701/501 series, use a 2.5 mm width flat-blade screwdriver.

• Applicable flat-blade screwdriver

Flat-blade screwdriver with parallel cutting edge: shaft diameter 2.5 mm (3.0 mm max.)

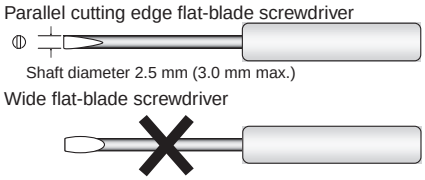

Driver with a thick shaft cannot be used.

- Always turn OFF the power supply before operating latching lever.
- Return to its original state after using the latching lever.

- Do not use the latching lever as a switch.
- Operation durability of the latching lever is 100 times or more.
- Do not keep the latching lever ON for a long period of time (24 hours or more) in order to maintain the operation check function.

Method of operation of the latching lever (test switch)

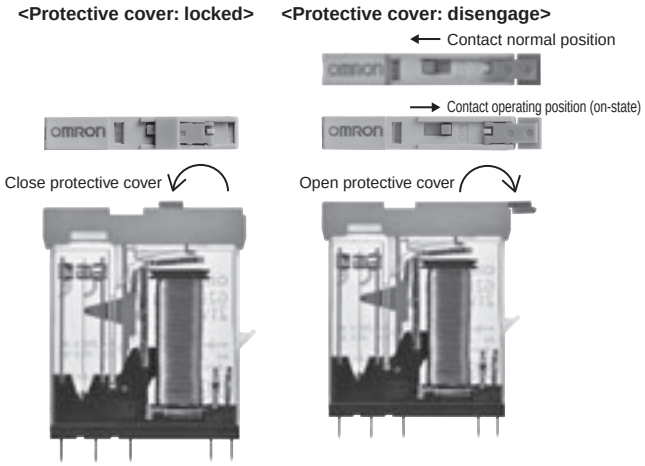

Keep the protective cover open when using the latching lever. Move until the latching lever clicks to the ON position (ON state). After use latching lever, in order to prevent malfunction, return the switch to contact normal position (OFF state), and make sure the protective cover is firmly closed.

Using the latching lever

Example: check the operation of the relay and the sequence circuit

<G3RV>

- Since the G3RV uses electronic components, do not allow it to fall, vibrate, or apply shock that exceeds the criteria. Doing so may result in failure, malfunction, or deterioration of performance.
- Tighten screw terminal for G3RV at torque 0.4 N · m. It may cause short-circuit failure or burning.
- Please use the voltage and current suitable for the input and output terminal portion of G3RV. It may cause short-circuit failure or burning.

Mounting

<The SSR Mounting Pitch (Panel Mounting)>

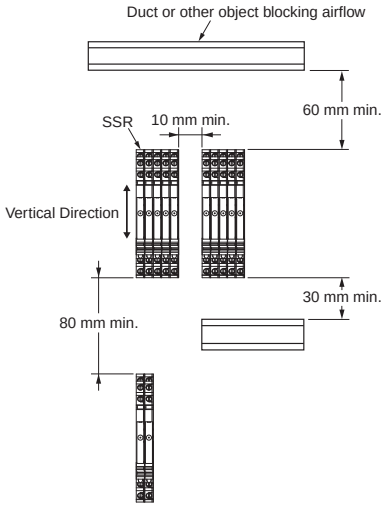

✻ When five or more are installed, install with 10 mm space between each.

<Relationship of SSR and duct (duct depth)>

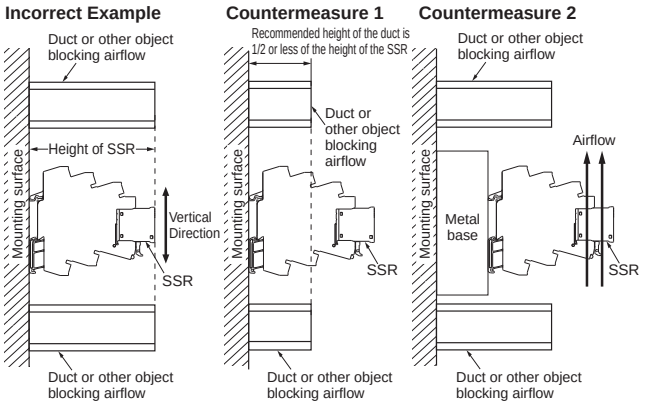

<Ventilation Outside the Control Panel>

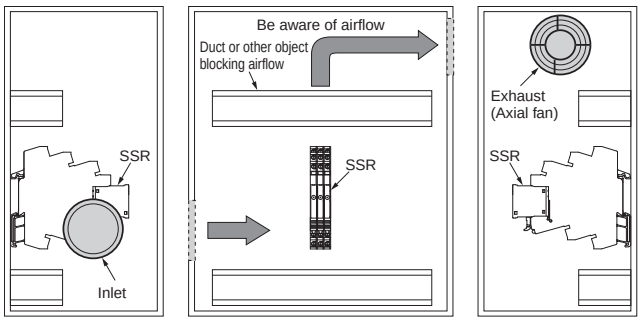

- If the air inlet or air outlet has a filter, clean the filter regularly to prevent it from clogging to ensure an efficient flow of air.
- Do not place objects that may obstruct the proper ventilation for outside or inside the inlet or exhaust port, and in the outside vicinity.
- A heat exchanger, if used, should be located in front of the G3RV to ensure the efficiency of the heat exchanger.
- Please observe the ambient temperature of G3RV. The rated current of the G3RV is measured at an ambient temperature of 25°C.
- The G3RV uses a semiconductor in the output element.
  This causes the temperature inside the control panel to increase due to heating resulting from the flow of electrical current through the load. The G3RV reliability can be increased by adding a ventilation fan to the control panel to dispel this heat, thus lowering the ambient temperature of the G3RV.
  (It suggests that life expectancy is doubled by each 10°C reduction in ambient temperature.)

EMI

The G3RV is a Class A product (for industrial environments). When used in a residential environment, it may cause radio interference. In such case, the user may be required to take appropriate measures.

For G2RV-SR/G3VR-SR
Common Accessories (order separately)

Ordering Information

Short Bars

Appearance	Pitch	No. of poles	Colors	Model *	Minimum order (Quantity)	Maximum energizing current
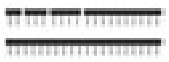	6.2 mm	2	Red (R), Blue (S), Yellow (Y)	**PYDN-6.2-020□**	10	32 A
		3		**PYDN-6.2-030□**		
		4		**PYDN-6.2-040□**		
		10		**PYDN-6.2-100□**		
		20		**PYDN-6.2-200□**		

Note: Use for wiring to the adjacent socket.
✻Replace the box (□) in the model number with the code for the covering color. □ color selection: R = red, S = blue, Y = yellow

Label

Appearance	Model	Minimum order (Sheet) (Pieces per sheet)
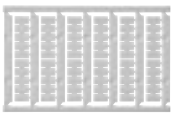	**XW5Z-P2.5LB1 ✻**	5 (1 sheet/72 pieces)
	XW5Z-P2.5LB2	

✻Available following June 2017 production.

Separate Plate

Appearance	Model
	XW5Z-EP12

PLC interface unit

Appearance	I/O classification	Connection method	Common process	Applicable Models ✻	Model
	For input	Push-In	PNP	G2RV-SR500-AP	**P2RVC-8-I-5-1**
			NPN		**P2RVC-8-I-5**
		Screw	PNP	G2RV-SR700-AP	**P2RVC-8-I-7-1**
	For output	Push-In	PNP	G2RV-SR500 G2RV-SR501 G3RV-SR500	**P2RVC-8-O-5-1**
			NPN		**P2RVC-8-O-5**
		Screw	PNP	G2RV-SR700 G2RV-SR701 G3RV-SR700	**P2RVC-8-O-7-1**

✻Please make sure applicable models, P2RVC can not be used other combination than the above table.

Parts for DIN Track Mounting

Appearance	Type		Model	Minimum order (Quantity)
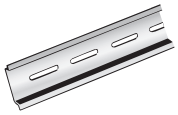	DIN Tracks	1 m	**PFP-100N**	1
		0.5 m	**PFP-50N**	
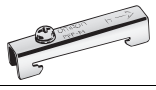	End Plate ✻		**PFP-M**	10
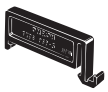	Spacer		**PFP-S**	

✻When mounting DIN Track, please use End Plate (PFP-M).
Refer to your OMRON website for details on PFP-□.

Applicable Cables

Name		Appearance	Cable length L (mm)	Connecting Cables	Applicable Connectors
Cables with Loose Wires P2RV-A□C	8 I/O points	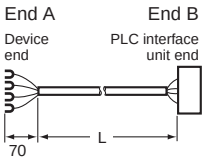	1,000	**P2RV-A100C**	Various devices
			2,000	**P2RV-A200C**	
			3,000	**P2RV-A300C**	
			5,000	**P2RV-A500C**	
Cables with Connectors (1:4) P2RV-4-□C	32 output points	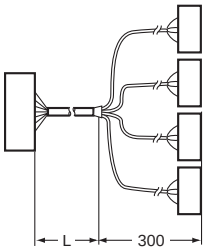	1,000	**P2RV-4-100C**	PLC I/O Units with MIL connectors (1:4) CJ1W-OD232/OD262, etc.
			2,000	**P2RV-4-200C**	
			3,000	**P2RV-4-300C**	
			5,000	**P2RV-4-500C**	
Cables with Connectors (1:4) P2RV-4-□IMC	32 input points	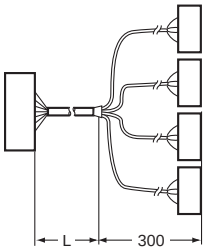	1,000	**P2RV-4-100IMC**	PLC I/O Units with MIL connectors (1:4) CJ1W-ID232/ID262, etc.
			2,000	**P2RV-4-200IMC**	
			3,000	**P2RV-4-300IMC**	
			5,000	**P2RV-4-500IMC**	
Cables with Connectors (1:4) P2RV-4-□IFC	32 input points	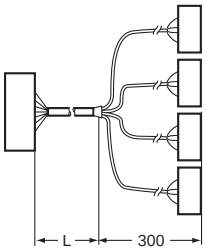	1,000	**P2RV-4-100IFC**	PLC I/O Units with Fujitsu connectors (1:4) CJ1W-ID231/ID261, etc.
			2,000	**P2RV-4-200IFC**	
			3,000	**P2RV-4-300IFC**	
			5,000	**P2RV-4-500IFC**	
Cables with Connectors (1:1) P2RV-A□C-OMR GRT1	8 output points	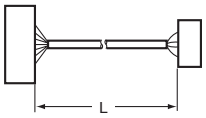	500	**P2RV-A050C-OMR GRT1**	Slice I/O Units (1:1) For inputs: GRT1-ID8-1 For outputs: GRT1-OD8-1
			1,000	**P2RV-A100C-OMR GRT1**	
	8 input points		500	**P2RV-A050IC-OMR GRT1**	
			1,000	**P2RV-A100IC-OMR GRT1**	
Cables with Connectors (1:1) P2RV-A□C-OMR NX	8 output points	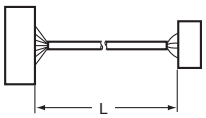	500	**P2RV-A050C-OMR NX**	PLC I/O Units with MIL connectors (1:1) For inputs: NX-ID4442 For outputs: NX-OD4256
			1,000	**P2RV-A100C-OMR NX**	
	8 input points		500	**P2RV-A050IC-OMR NX**	
			1,000	**P2RV-A100IC-OMR NX**	

Name		Appearance	Cable length L (mm)	Connecting Cables	Applicable Connectors
Schneider Electric PLC Connecting Cables P2RV-□C-SCH-□	32 input points / 32 output points	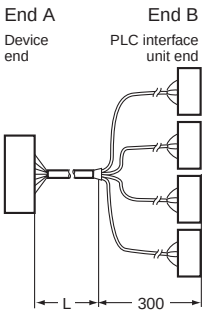	500	**P2RV-050C-SCH-A**	Schneider Electric PLCs with 32-point connectors (1:4) For inputs: 140 DDI 353 00 For outputs: 140 DDO 353 00
			1,000	**P2RV-100C-SCH-A**	
			2,000	**P2RV-200C-SCH-A**	
			3,000	**P2RV-300C-SCH-A**	
			5,000	**P2RV-500C-SCH-A**	
			500	**P2RV-050C-SCH-B**	
			1,000	**P2RV-100C-SCH-B**	
			2,000	**P2RV-200C-SCH-B**	
			3,000	**P2RV-300C-SCH-B**	
			5,000	**P2RV-500C-SCH-B**	
	16 input points / 16 output points	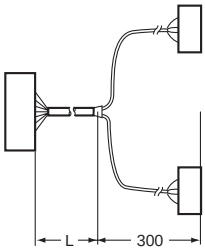	500	**P2RV-050C-SCH-C**	Schneider Electric PLCs with 16-point connectors (1:2) For inputs: BMX DDI 1602 For outputs: BMX DDO 1602
			1,000	**P2RV-100C-SCH-C**	
			2,000	**P2RV-200C-SCH-C**	
			3,000	**P2RV-300C-SCH-C**	
			5,000	**P2RV-500C-SCH-C**	
			500	**P2RV-050C-SCH-D**	
			1,000	**P2RV-100C-SCH-D**	
			2,000	**P2RV-200C-SCH-D**	
			3,000	**P2RV-300C-SCH-D**	
			5,000	**P2RV-500C-SCH-D**	
Siemens PLC Connecting Cables P2RV-□C-SIM-□	32 input points / 32 output points	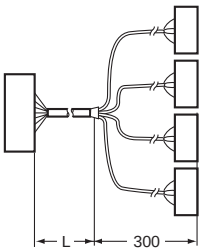	500	**P2RV-050C-SIM-A**	Siemens PLCs with 32-point connectors (1:4) For inputs: 6ES7 321-1BL00-0AA0 For outputs: 6ES7 322-1BL00-0AA0
			1,000	**P2RV-100C-SIM-A**	
			2,000	**P2RV-200C-SIM-A**	
			3,000	**P2RV-300C-SIM-A**	
			5,000	**P2RV-500C-SIM-A**	
			500	**P2RV-050C-SIM-B**	
			1,000	**P2RV-100C-SIM-B**	
			2,000	**P2RV-200C-SIM-B**	
			3,000	**P2RV-300C-SIM-B**	
			5,000	**P2RV-500C-SIM-B**	
	16 input points	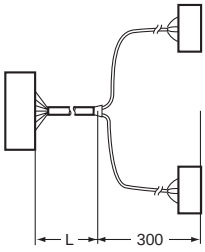	500	**P2RV-050C-SIM-C**	Siemens PLCs with 16-point connectors (1:2) For inputs: 6ES7 321-1BH02-0AA0
			1,000	**P2RV-100C-SIM-C**	
			2,000	**P2RV-200C-SIM-C**	
			3,000	**P2RV-300C-SIM-C**	
			5,000	**P2RV-500C-SIM-C**	
	32 input points / 32 output points	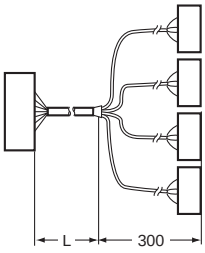	500	**P2RV-050C-SIM-D**	Siemens PLCs with 32-point connectors (1:4) For inputs: 6ES7 421-1BL-0AA0 For outputs: 6ES7 422-1BL-0AA0
			1,000	**P2RV-100C-SIM-D**	
			2,000	**P2RV-200C-SIM-D**	
			3,000	**P2RV-300C-SIM-D**	
			5,000	**P2RV-500C-SIM-D**	
			500	**P2RV-050C-SIM-E**	
			1,000	**P2RV-100C-SIM-E**	
			2,000	**P2RV-200C-SIM-E**	
			3,000	**P2RV-300C-SIM-E**	
			5,000	**P2RV-500C-SIM-E**	

PLC interface unit

Ratings / characteristics

Rated voltage		30 VAC/DC
Rated current		0.5 A/poles, 2 A/unit
Ambient operating temperature		–40 to 55°C
Vibration resistance	**Destruction**	10 to 55 to 10 Hz, single amplitude 0.75 mm (double amplitude 1.5 mm)
	Malfunction	10 to 55 to 10 Hz, single amplitude 0.75 mm (double amplitude 1.5 mm)
Shock resistance	**Destruction**	300 m/s^2
	Malfunction	100 m/s^2

Electrical schematic

Input

P2RVC-8-I-□-1 (PNP)

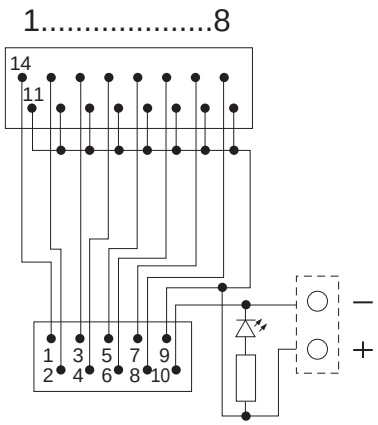

P2RVC-8-I-5 (NPN)

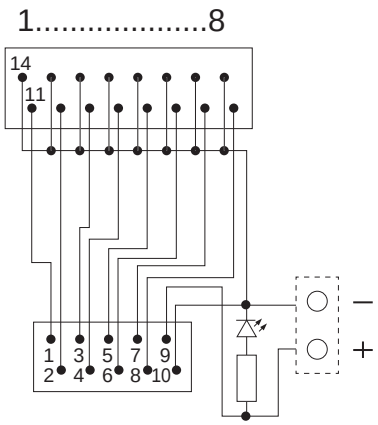

Output

P2RVC-8-O-□-1 (PNP)

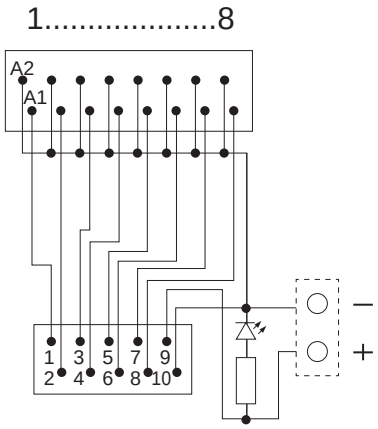

P2RVC-8-O-5 (NPN)

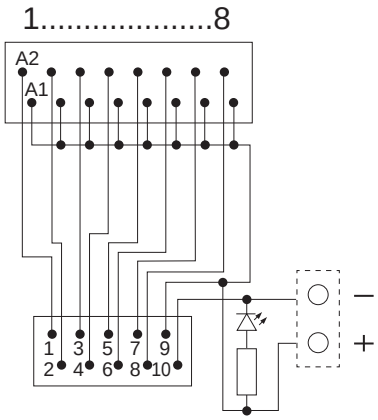

Dimensions

(unit: mm)

PLC interface unit

Push-IN
P2RVC-8-I-5(-1)
P2RVC-8-O-5(-1)

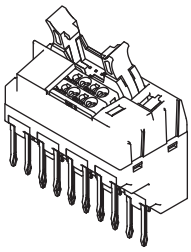

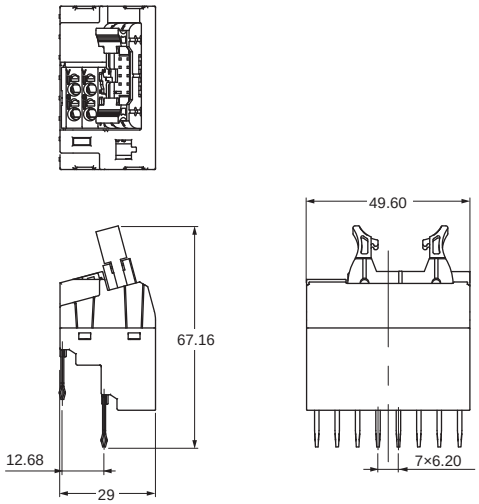

Screw
P2RVC-8-I-7-1
P2RVC-8-O-7-1

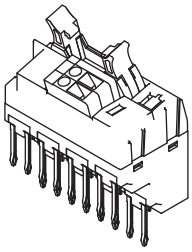

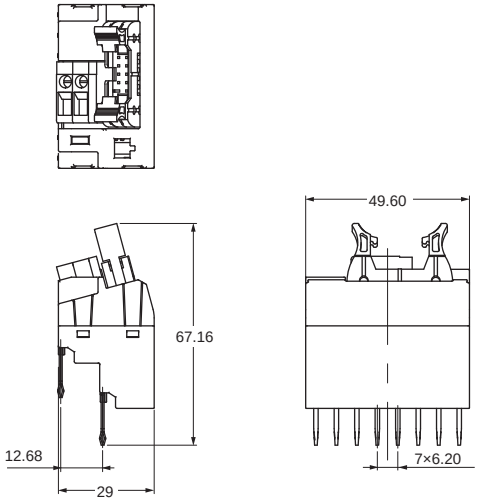

(Except for PLC interface unit)
Common Accessories (order separately)

Dimensions

(unit: mm)

Short Bars

PYDN-6.2-□□ (6.2 mm)

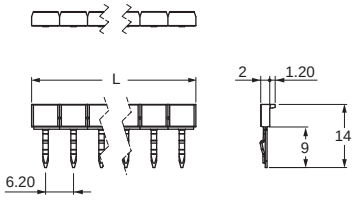

Pitch	No. of poles	L (Length)	Colors	Model ✻	Maximum carry current
6.2 mm	2	12.4	Red (R) Blue (S) Yellow (Y)	**PYDN-6.2-020□**	32 A
	3	18.6		**PYDN-6.2-030□**	
	4	24.8		**PYDN-6.2-040□**	
	10	62		**PYDN-6.2-100□**	
	20	124		**PYDN-6.2-200□**	

Note: Use the Short Bars for crossover wiring within one Socket or between Sockets.
✻ Replace the box (□) in the model number with the code for the covering color.

Separate Plate

XW5Z-EP12

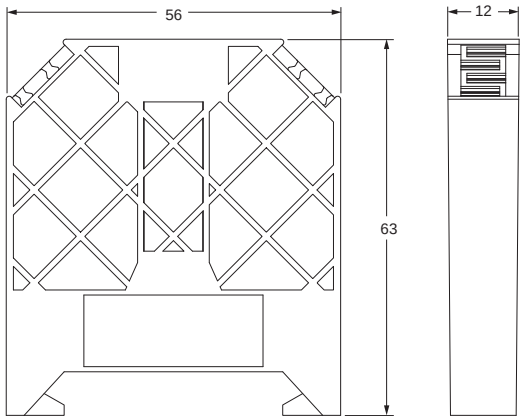

Parts for DIN Track Mounting

Refer to your OMRON website for details on the PFP-□.

Safety Precautions

Precautions for Correct Use

When mounting a short bar

- Intermediate pins can be bent by a tool or by hand and cut off for use.

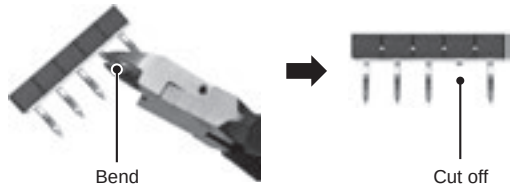

- The short bar can be cut to as many poles as needed. Insert the tool from the plastic part side, and cut along the groove in the plastic part between the terminals. When cutting, take care not to break or deform the terminals.
However, because the metal on the cut surface will be exposed, insulation countermeasures between adjacent products must be ensured. Such countermeasures include widening the intervals between products or using XW5Z-EP12 separate plates (order separately).

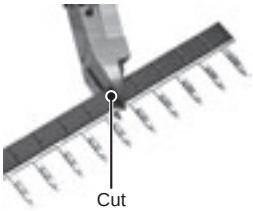

Mounting a separate plate

- Use a flat-blade screwdriver to tighten the center top screw and secure the plate. Loosen the screw to remove the plate from the DIN rail.

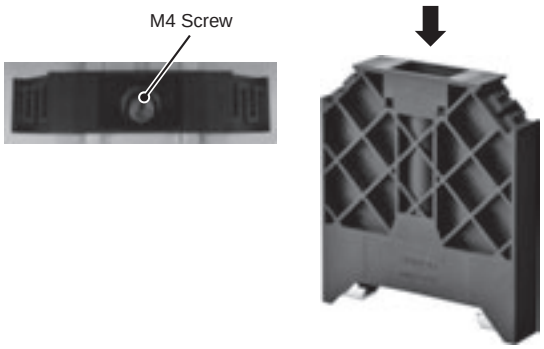

OMRON AUTOMATION AMERICAS HEADQUARTERS • Chicago, IL USA • 847.843.7900 • 800.556.6766 • automation.omron.com

OMRON CANADA, INC. • HEAD OFFICE
Toronto, ON, Canada • 416.286.6465 • 866.986.6766 • automation.omron.com

OMRON ELECTRONICS DE MEXICO • HEAD OFFICE
Ciudad de México • 52.55.5901.4300 • 01.800.386.6766 • mela@omron.com

OMRON ELECTRONICS DE MEXICO • SALES OFFICE
San Pedro Garza García, N.L. • 81.12.53.7392 • 01.800.386.6766 • mela@omron.com

OMRON ELECTRONICS DE MEXICO • SALES OFFICE
Eugenio Garza Sada,León, Gto • 01.800.386.6766 • mela@omron.com

OMRON ELETRÔNICA DO BRASIL LTDA • HEAD OFFICE
São Paulo, SP, Brasil • 55.11.2101.6300 • www.omron.com.br

OMRON ARGENTINA • SALES OFFICE
Buenos Aires, Argentina • +54.11.4521.8630 • +54.11.4523.8483
mela@omron.com

OTHER OMRON LATIN AMERICA SALES
+54.11.4521.8630 • +54.11.4523.8483 • mela@omron.com

Authorized Distributor:

Controllers & I/O
• Machine Automation Controllers (MAC) • Motion Controllers
• Programmable Logic Controllers (PLC) • Temperature Controllers • Remote I/O

Robotics
• Industrial Robots • Mobile Robots

Operator Interfaces
• Human Machine Interface (HMI)

Motion & Drives
• Machine Automation Controllers (MAC) • Motion Controllers • Servo Systems
• Frequency Inverters

Vision, Measurement & Identification
• Vision Sensors & Systems • Measurement Sensors • Auto Identification Systems

Sensing
• Photoelectric Sensors • Fiber-Optic Sensors • Proximity Sensors
• Rotary Encoders • Ultrasonic Sensors

Safety
• Safety Light Curtains • Safety Laser Scanners • Programmable Safety Systems
• Safety Mats and Edges • Safety Door Switches • Emergency Stop Devices
• Safety Switches & Operator Controls • Safety Monitoring/Force-guided Relays

Control Components
• Power Supplies • Timers • Counters • Programmable Relays
• Digital Panel Meters • Monitoring Products

Switches & Relays
• Limit Switches • Pushbutton Switches • Electromechanical Relays
• Solid State Relays

Software
• Programming & Configuration • Runtime

J214I-E3-02 Note: Specifications are subject to change. © 2019 Omron. All Rights Reserved. Printed in U.S.A.

Printed on recycled paper.

Mouser Electronics

Authorized Distributor

Click to View Pricing, Inventory, Delivery & Lifecycle Information:

Omron:

G2RV-SR500 AC200 G2RV-SR500 AC230 G2RV-SR701 ACDC24 G3RV-SR500-A AC100 G2RV-SR500 ACDC48 G2RV-SR500-AP DC12 G3RV-SR700-D AC200 G3RV-SR500-D DC12 G3RV-SR700-D ACDC48 G3RV-SR500-AL AC230 G3RV-SR500-D AC110 G3RV-SR700-D AC100 G2RV-SR700 ACDC24 G3RV-SR500-AL ACDC24 G3RV-SR700-A DC12 G2RV-SR501 DC24 G3RV-SR500-A DC12 G3RV-SR500-D DC24 G3RV-SR500-A ACDC48 G3RV-SR500-A DC24 G3RV-SR500-D AC100 G2RV-SR700 AC100 G2RV-SR700-AP AC230 G3RV-SR500-AL DC24 G3RV-SR700-AL DC24 G3RV-SR700-AL AC110 G3RV-SR700-D DC12 G2RV-SR500 AC100 G2RV-SR500 AC110 G2RV-SR500 DC12 G3RV-SR700-D ACDC24 G3RV-SR500-AL DC12 G3RV-SR500-D AC230 G2RV-SR500 ACDC24 G3RV-SR700-A AC100 G3RV-SR700-AL AC200 G3RV-SR700-AL ACDC48 G3RV-SR700-A AC230 G3RV-SR700-D AC110 G3RV-SR700-AL AC230 G3RV-SR700-D DC24 G3RV-SR700-AL AC100 G3RV-SR700-A DC24 G3RV-SR700-AL ACDC24 G3RV-SR700-AL DC12 G3RV-SR700-D AC230 G3RV-SR500-AL AC200 G3RV-SR700-A ACDC24 G2RV-SR500-AP AC230 G2RV-SR501 ACDC24 G2RV-SR700-AP AC200 G3RV-SR700-A ACDC48 G2RV-SR500 DC24 G3RV-SR500-D AC200 G3RV-SR500-D ACDC24 G3RV-SR700-A AC110 G2RV-SR700-AP DC12 G2RV-SR500-AP AC200 G2RV-SR700 AC230 G2RV-SR700-AP AC100 G3RV-SR500-AL AC110 G3RV-SR500-A AC200 G3RV-SR500-AL AC100 G2RV-SR700 AC200 G2RV-SR500-AP DC24 G2RV-SR701 DC24 G3RV-SR500-A AC110 G2RV-SR500-AP AC110 G2RV-SR700-AP ACDC48 G2RV-SR500-AP ACDC48 G3RV-SR500-A ACDC24 G2RV-SR700 DC24 G3RV-SR500-A AC230 G3RV-SR500-AL ACDC48 G3RV-SR700-A AC200 G2RV-SR500-AP AC100 G2RV-SR700 AC110 G2RV-SR700-AP ACDC24 G3RV-SR500-D ACDC48 G2RV-SR700 ACDC48 G2RV-SR700 DC12 G2RV-SR700-AP DC24 G2RV-SR700-AP AC110 G2RV-SR500-AP AC/DC24