resideo Filter

Braukmann F76S

Reverse rinsing fine filter

APPLICATION

F76S reverse rinsing filters ensure a continuous supply of filtered water. The fine filter prevents the ingress of foreign bodies, for example rust particles, strands of hemp and grains of sand and thus reduces the probability of corrosion. The appliances correspond to the requirements of current DIN/DVGW specifications.

APPROVALS

- DVGW
- SVGW

approval for all filters with 100 µm mesh sizes

SPECIAL FEATURES

- Double Spin Technology for connection sizes $^1/_2$" to $1^1/_4$"
  - Cartridge with external rotor enabling simultaneous cleaning in lower and upper filter areas
  - Visual function check possible
- Filtered water supplied even during reverse rinsing
- Patented reverse rinsing system - fast and thorough cleaning of the filter with small amount of water
- Memory ring indicates when next manual reverse rinsing is due
- Automatic reverse rinsing actuator with bayonet connector can be retrofitted
- Large filter surface
- Shock resistant clear synthetic material filter bowl enables easy checking of filter contamination
- Filter and complete filter bowl are replaceable
- Also available without connections
- Standardised discharge connection
- ACS certified
- All materials are KTW approved
- Approved by TÜV LGA for low noise, Group 1 without limitations

TECHNICAL DATA

Media	
Medium:	Drinking water
Connections/Sizes	
Connection sizes:	$^1/_2$" - 2"
Pressure values	
Max. operating pressure with clear filter bowl:	1.5 - 16 bar
Max. operating pressure with red bronze filter bowl:	1.5 - 25 bar
Operating temperatures	
Operating temperature range medium accord. to EN 1567:	5 °C - 30 °C
Max. operating temperature medium (clear filter bowl):	40 °C
Max. operating temperature medium (red bronze filter bowl):	70 °C
Specifications	
Installation position:	Horizontal, with filter bowl downwards

Note: The filter is constructed for drinking water installations. In case of a process water application the filter has to be proven individually.

ПРОМЭЛЕКТРОНИКА / sales@prom-elec.com

CONSTRUCTION

Overview

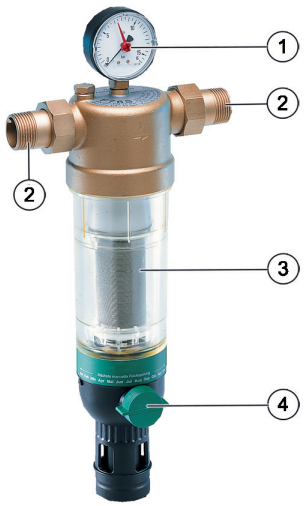

	Components	Materials
1	Housing with pressure gauge	Dezincification-resistant brass
2	Threaded male connections (versions AA and AAM)	Brass
3	Fine filter in clear filter bowl (versions AA and EA) Filter in red bronze filter bowl (version AAM)	Stainless steel fine filter, red bronze or shock-resistant, clear transparent synthetic material filter bowl
4	Ball valve with drain connection	Brass (Ball Valve body), Stainless steel (ball), Plastic-durethan (drain adapter)
	Not depicted components:	
	Double wring wrench	Plastic
	Seals	NBR

METHOD OF OPERATION

The filter insert is divided into two parts. In the "filtering" position, only the lower, larger section is rinsed through by water jets from outside to inside. The small upper section does not come in contact with unfiltered water. When the ball valve is opened for reverse rinsing, then the whole filter insert is pushed downwards until the water supply to the outer side of the main filter is stopped. Simultaneously, the water flow is opened to the upper part of the filter. The water needed for cleaning the filter passes through the upper filter section, then the rotating impeller and the main filter from inside to outside, i.e. the filter is reverse rinsed with filtered water. In that way the upper filter is also cleaned by jets from the impeller. The filter automatically switches back to the operating position when the ball valve is closed again.

Filters with Double Spin Technology have turbine blades which circulate the water and thereby set the rotor on the upper filter into a rotational motion. The internal impeller rinses off particles that have adhered to the upper filter at the intersecting points with the rotor.

TRANSPORTATION AND STORAGE

Keep parts in their original packaging and unpack them shortly before use.

The following parameters apply during transportation and storage:

Parameter	Value
Environment:	clean, dry and dust free
Min. ambient temperature:	5 °C
Max. ambient temperature:	55 °C
Min. ambient relative humidity:	25 % *
Max. ambient relative humidity:	85 % *

*non condensing

INSTALLATION GUIDELINES

Setup requirements

- Install in horizontal pipework with filter bowl downwards
  - This position ensures optimum filter efficiency
- Install shut-off valves
- These filters are armatures which need to be maintained regularly
- Ensure good access
  - Pressure gauge can be read off easily
  - Degree of contamination can be easily seen with clear filter bowl
  - Simplifies maintenance and inspection
- The installation location should be protected against frost
- Related to the EN 806-2 it is recommended to install the filter immediately after the water meter
- In order to avoid flooding, it is recommended to arrange a permanent, professionally dimensioned wastewater connection

Installation Example

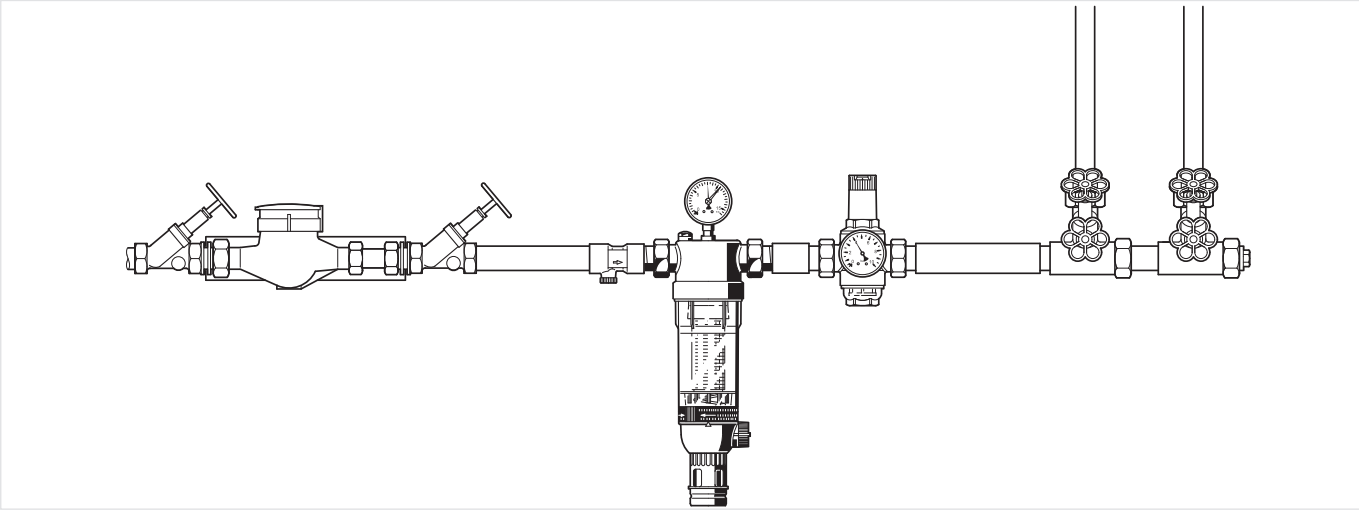

TECHNICAL CHARACTERISTICS

kvs-Values

Connection sizes:	15	20	25	32	40	50
k_{VS}-value (m^3/h):	4.8	7.2	9.8	10.7	21.0	22.0

Pressure drop characteristics

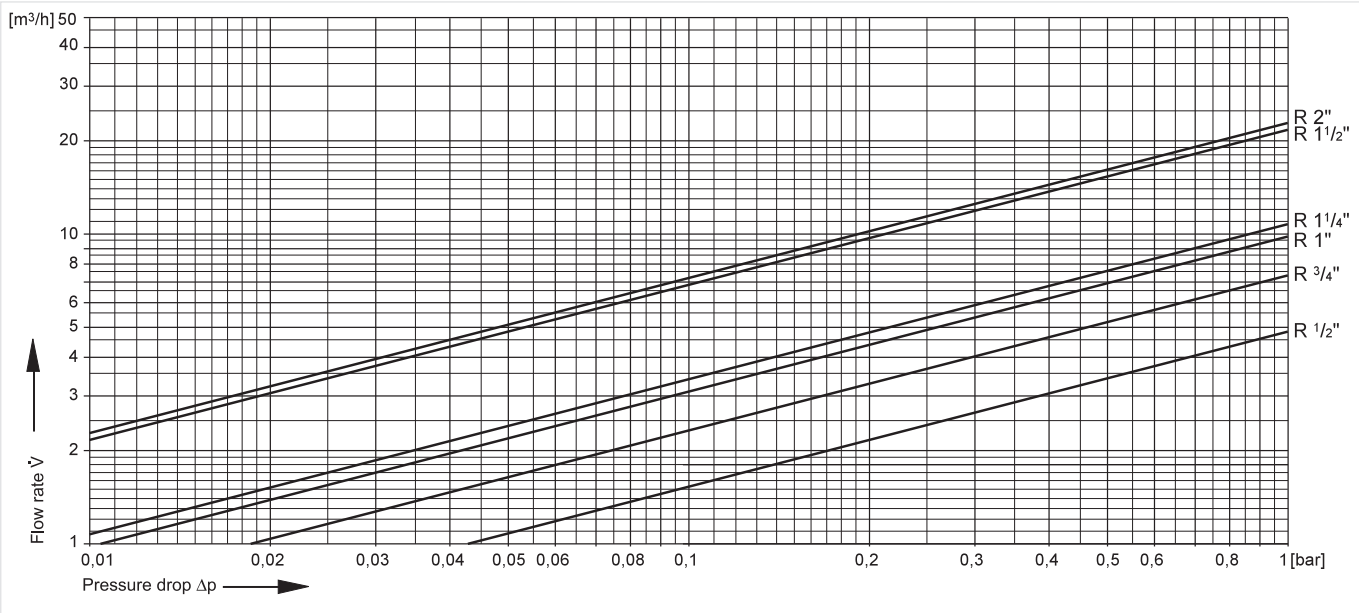

DIMENSIONS

Overview

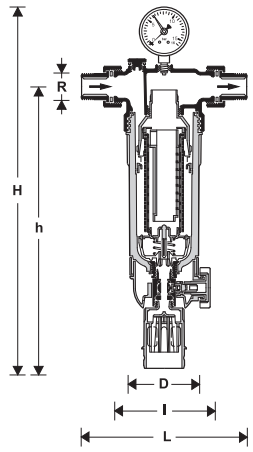

Parameter		Values					
Connection sizes:	R	1/2"	3/4"	1"	1 1/4"	1 1/2"	2"
Nominal sizes:	DN	15	20	25	32	40	50
Weight:	kg	2.9	2.9	3.1	3.3	4.0	4.8
Dimensions:	L	170	178	209	222	246	267
	l	110	110	130	130	150	150
	H	449	449	453	453	532	532
	h	350	350	351	351	417	417
	D	97	97	97	97	120	120
Flow value at Δp=0.5 bar:	m^3/h	3.8	5.5	7.5	8.9	15.6	16.5
DVGW registration number:		NW-9301 AT 2308					
Double Spin Technology:		Yes	Yes	Yes	Yes	No	No

Note: All dimensions in mm unless stated otherwise.

ORDERING INFORMATION

The following tables contain all the information you need to make an order of an item of your choice.
When ordering, please always state the type, the ordering or the part number.

Options

Connection size	Filter mesh size*)	Temperature	Filter bowl	OS.-No.
1/2"	100 µm	30 °C	Transparent	F76S-1/2AA
1/2"	100 µm	70 °C	Red brass	F76S-1/2AAM
1/2"	20 µm	30 °C	Transparent	F76S-1/2AB
1/2"	50 µm	30 °C	Transparent	F76S-1/2AC
1/2"	50 µm	70 °C	Red brass	F76S-1/2ACM
1/2"	200 µm	30 °C	Transparent	F76S-1/2AD
1/2"	500 µm	30 °C	Transparent	F76S-1/2AF
3/4"	100 µm	30 °C	Transparent	F76S-3/4AA
3/4"	100 µm	70 °C	Red brass	F76S-3/4AAM
3/4"	20 µm	30 °C	Transparent	F76S-3/4AB
3/4"	50 µm	30 °C	Transparent	F76S-3/4AC
3/4"	50 µm	70 °C	Red brass	F76S-3/4ACM
3/4"	200 µm	30 °C	Transparent	F76S-3/4AD
3/4"	300 µm	70 °C	Red brass	F76S-3/4AEM
3/4"	500 µm	30 °C	Transparent	F76S-3/4AF
1"	100 µm	30 °C	Transparent	F76S-1AA
1"	100 µm	70 °C	Red brass	F76S-1AAM
1"	20 µm	30 °C	Transparent	F76S-1AB
1"	50 µm	30 °C	Transparent	F76S-1AC
1"	50 µm	70 °C	Red brass	F76S-1ACM
1"	200 µm	30 °C	Transparent	F76S-1AD
1"	300 µm	30 °C	Transparent	F76S-1AE
1"	500 µm	30 °C	Transparent	F76S-1AF
1 1/4"	100 µm	30 °C	Transparent	F76S-11/4AA
1 1/4"	100 µm	70 °C	Red brass	F76S-11/4AAM
1 1/4"	20 µm	30 °C	Transparent	F76S-11/4AB
1 1/4"	50 µm	30 °C	Transparent	F76S-11/4AC
1 1/4"	50 µm	70 °C	Red brass	F76S-11/4ACM
1 1/4"	200 µm	30 °C	Transparent	F76S-11/4AD
1 1/4"	500 µm	30 °C	Transparent	F76S-11/4AF
1 1/2"	100 µm	30 °C	Transparent	F76S-11/2AA
1 1/2"	100 µm	70 °C	Red brass	F76S-11/2AAM
1 1/2"	20 µm	30 °C	Transparent	F76S-11/2AB
1 1/2"	50 µm	30 °C	Transparent	F76S-11/2AC
1 1/2"	50 µm	70 °C	Red brass	F76S-11/2ACM
1 1/2"	200 µm	30 °C	Transparent	F76S-11/2AD
1 1/2"	300 µm	30 °C	Transparent	F76S-11/2AE
1 1/2"	500 µm	30 °C	Transparent	F76S-11/2AF
2"	100 µm	30 °C	Transparent	F76S-2AA
2"	100 µm	70 °C	Red brass	F76S-2AAM
2"	20 µm	30 °C	Transparent	F76S-2AB
2"	50 µm	30 °C	Transparent	F76S-2AC
2"	50 µm	70 °C	Red brass	F76S-2ACM
2"	200 µm	30 °C	Transparent	F76S-2AD
2"	300 µm	30 °C	Transparent	F76S-2AE
2"	300 µm	70 °C	Red brass	F76S-2AEM
2"	500 µm	30 °C	Transparent	F76S-2AF

*) approvals for all filters with 100 µm mesh sizes

Accessories

	Description		Dimension	Part No.
	Z11S	**Automatic reverse rinsing actuator** For automatic filter cleaning at presettable intervals		
		230 V, 50/60 Hz, 10 with moulded Schuko electrical plug		Z11S-A
		24 V, 50/60 Hz, 10 without electrical plug		Z11S-B
		230 V, 50/60 Hz, 10 with moulded Type 12 electrical plug for Switzerland		Z11S-Z
	VST06B	**Connection set** Solder connections		
			$^1/_2$"	VST06-1/2B
			$^3/_4$"	VST06-3/4B
			1"	VST06-1B
			$1^1/_4$"	VST06-11/4B
			$1^1/_2$"	VST06-11/2B
			2"	VST06-2B
	FT09RS	**Red-bronze filter bowl** For temperatures up to 70°C and operating pressures up to 25.0 bar		
			$^1/_2$" - $1^1/_4$"	FT09RS-1A
			$1^1/_2$" - 2"	FT09RS-11/2A
	DDS76	**Differential pressure switch**		
			$^1/_2$" + $^3/_4$"	DDS76-$^1/_2$
			1" + $1^1/_4$"	DDS76-1
			$1^1/_2$" + 2"	DDS76-1 $^1/_2$
	ZR10K	**Double ring wrench for removing the filter bowl**		
			$^1/_2$" +$^3/_4$"	ZR10K-3/4
			1" + $1^1/_4$"	ZR10K-1
			$1^1/_2$" + 2"	ZR10K-11/2

Spare Parts

F76S Fine Filters from 2007 onwards

Overview

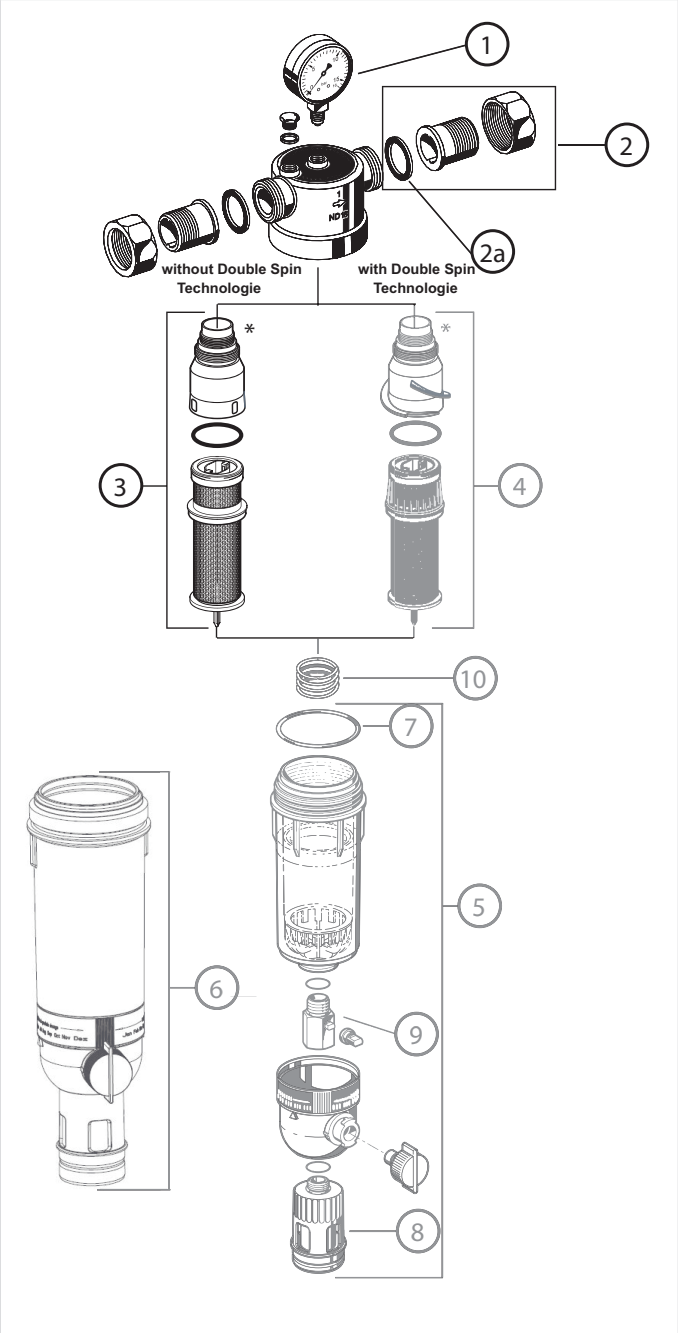

	Description	Dimension	Part No.
1	**Pressure gauge**		
		0 - 16 bar	M76K-A16
2a	**Connection set threaded connection**		
		$^1/_2$"	VST06-1/2A
		$^3/_4$"	VST06-3/4A
		1"	VST06-1A
		$1^1/_4$"	VST06-11/4A
		$1^1/_2$"	VST06-11/2A
		2"	VST06-2A
2	**Union seal washer (10 pcs.)**		
		$^1/_2$" + $^3/_4$"	0901444
		1"	0901445
		$1^1/_4$"	0901446
		$1^1/_2$"	0901447
		2"	0901448
3	**Filter insert complete***		
	Filter mesh size: 100 µm	$^1/_2$" - $^3/_4$"	AF11S-1/2A
	Filter mesh size: 20 µm	$^1/_2$" - $^3/_4$"	AF11S-1/2B
	Filter mesh size: 50 µm	$^1/_2$" - $^3/_4$"	AF11S-1/2C
	Filter mesh size: 200 µm	$^1/_2$" - $^3/_4$"	AF11S-1/2D
	Filter mesh size: 300 µm	$^1/_2$" - $^3/_4$"	AF11S-1/2E
	Filter mesh size: 500 µm	$^1/_2$" - $^3/_4$"	AF11S-1/2F
	Filter mesh size: 100 µm	1" - $1^1/_4$"	AF11S-1A
	Filter mesh size: 20 µm	1" - $1^1/_4$"	AF11S-1B
	Filter mesh size: 50 µm	1" - $1^1/_4$"	AF11S-1C
	Filter mesh size: 200 µm	1" - $1^1/_4$"	AF11S-1D
	Filter mesh size: 300 µm	1" - $1^1/_4$"	AF11S-1E
	Filter mesh size: 500 µm	1" - $1^1/_4$"	AF11S-1F
	Filter mesh size: 100 µm	$1^1/_2$" - 2"	AF11S-11/2A
	Filter mesh size: 20 µm	$1^1/_2$" - 2"	AF11S-11/2B
	Filter mesh size: 50 µm	$1^1/_2$" - 2"	AF11S-11/2C
	Filter mesh size: 200 µm	$1^1/_2$" - 2"	AF11S-11/2D
	Filter mesh size: 300 µm	$1^1/_2$" - 2"	AF11S-11/2E
	Filter mesh size: 500 µm	$1^1/_2$" - 2"	AF11S-11/2F

*The filter guide (either with double spin or without double spin feature) is included in the packaging of the replacement filter inserts (AF11DS and AF11S) only for the sizes $^1/_2$" up to $1^1/_4$"!

Note: 4 - 10 see on page 8

Overview

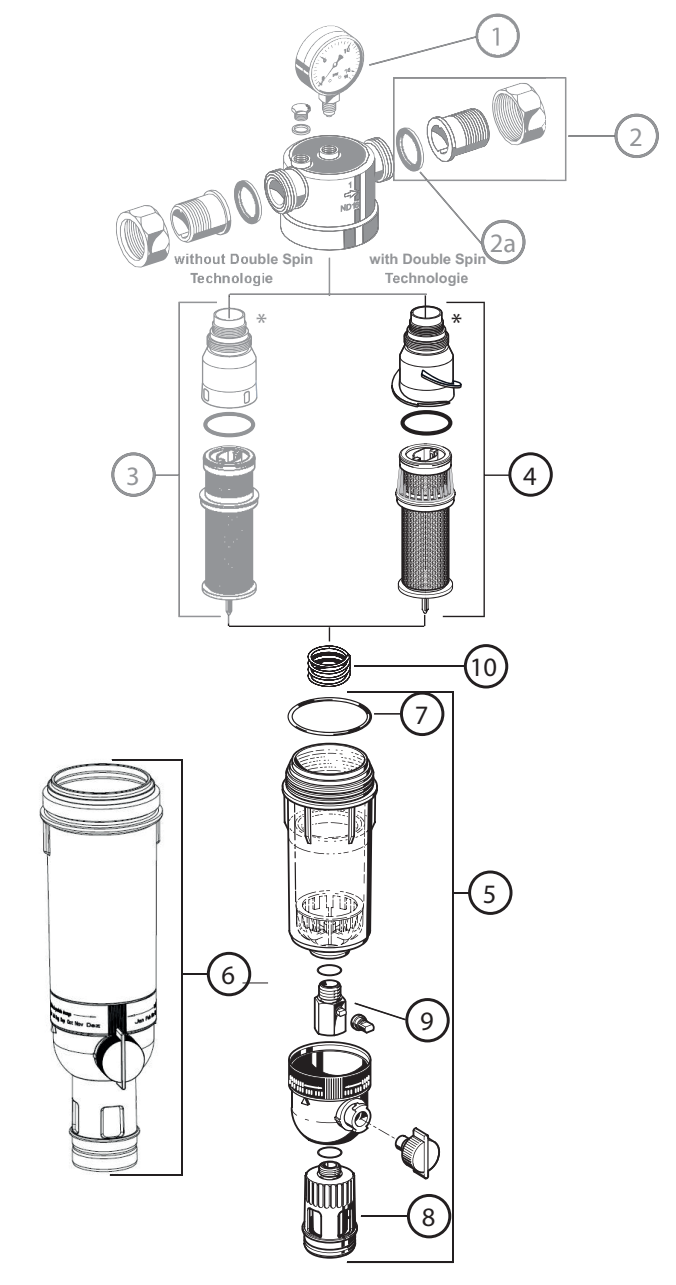

	Description	Dimension	Part No.
4	**Filter insert complete*, for filters with Double Spin Technology**		
	Filter mesh size: 100 µm	1/2" - 3/4"	AF11DS-1/2A
	Filter mesh size: 20 µm	1/2" - 3/4"	AF11DS-1/2B
	Filter mesh size: 50 µm	1/2" - 3/4"	AF11DS-1/2C
	Filter mesh size: 200 µm	1/2" - 3/4"	AF11DS-1/2D
	Filter mesh size: 300 µm	1/2" - 3/4"	AF11DS-1/2E
	Filter mesh size: 500 µm	1/2" - 3/4"	AF11DS-1/2F
	Filter mesh size: 100 µm	1" - 1 1/4"	AF11DS-1A
	Filter mesh size: 20 µm	1" - 1 1/4"	AF11DS-1B
	Filter mesh size: 50 µm	1" - 1 1/4"	AF11DS-1C
	Filter mesh size: 200 µm	1" - 1 1/4"	AF11DS-1D
	Filter mesh size: 300 µm	1" - 1 1/4"	AF11DS-1E
	Filter mesh size: 500 µm	1" - 1 1/4"	AF11DS-1F
5	**Clear filter bowl**		
		1/2" - 1 1/4"	KF11S-1A
		1 1/2" - 2"	KF11S-11/2A
6	**Red bronze filter bowl**		
		1/2" - 1 1/4"	FT09RS-1A
		1 1/2" - 2"	FT09RS-11/2A
7	**O-ring set (10 pcs.)**		
		1/2" + 1 1/4"	0900747
		1 1/2" + 2"	0900748
8	**Drain connector**		
		1/2" - 2"	AA76-1/2A
9	**Ball valve complete**		
		1/2" - 2"	KH11S-1A
10	**Spring**		
		1/2" - 1 1/4 "	2074900
		1 1/2" - 2 "	2159400

*The filter guide (either with double spin or without double spin feature) is included in the packaging of the replacement filter inserts (AF11DS and AF11S) only for the sizes 1/2" up to 1 1/4"!

Note: 1 -3 see on page 7

Manufactured for
and on behalf of

Pittway Sàrl, Z.A., La Pièce 4,
1180 Rolle, Switzerland

For more information
homecomfort.resideo.com/europe

Ademco 1 GmbH, Hardhofweg 40,
74821 MOSBACH, GERMANY

Phone: +49 6261 810
Fax: +49 6261 81309

This document contains proprietary information of Pittway Sàrl and its affiliated companies and is protected by copyright and other international laws.
Reproduction or improper use without specific written authorization of Pittway Sàrl is strictly forbidden.

© 2021 Resideo Technologies, Inc. All rights reserved.

Subject to change. EN1H-1110GE23 R0721