resideo Filter

Braukmann F74CS/FN74CS

Reverse rinsing fine filter

APPLICATION

The reverse rinsing filters ensure a continuous supply of filtered water. The fine filter prevents the ingress of foreign bodies, for example rust particles, strands of hemp and grains of sand and thus reduces the probability of corrosion.

The fine filters are used in systems where an existing pressure reducing valve is fitted or where one is not required. Both horizontal and vertical installation is possible.

APPROVALS

- DVGW

approval for all filters with 100 µm mesh sizes and with rotatable connection piece

SPECIAL FEATURES

- LEAD-FREE: Pb content of all materials less than 0.1 %
- Filtered water supplied even during reverse rinsing
- Patented reverse rinsing system - fast and thorough cleaning of the filter with small amount of water
- Memory ring indicates when next manual reverse rinsing is due
- Automatic reverse rinsing actuator with bayonet connector can be retrofitted
- Large filter surface
- Shock resistant clear synthetic material filter bowl enables easy checking of filter contamination
- Filter insert fully replaceable
- ACS certified
- All materials are KTW approved
- Approved by TÜV LGA for low noise, Group 1 without limitations

TECHNICAL DATA

Media	
Medium:	Drinking water
Connections/Sizes	
Connection sizes:	1/2" - 2" (with rotatable connector piece)
Pressure values	
Operating pressure range:	1.5 - 16 bar
Max. inlet pressure:	16 bar (up to 12 bar long-term*)
Operating temperatures	
Operating temperature range medium accord. to EN 1567:	5 - 30 °C
Specifications	
Installation position:	Horizontal or vertical, with filter bowl downwards

* For maintaining the measuring accuracy of the manometer, a continuous maximum pressure load of 12 bar is permitted.

Note: The filter is constructed for drinking water installations. In case of a process water application the filter has to be proven individually.

ПРОМЭЛЕКТРОНИКА / sales@prom-elec.com

CONSTRUCTION

Overview

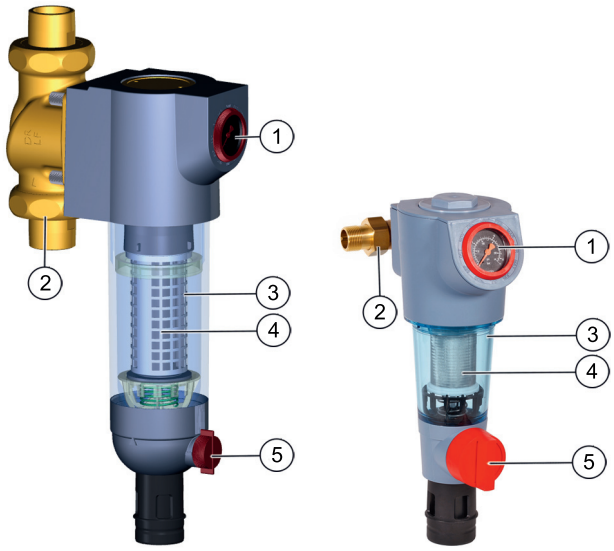

	Components	Materials
1	Housing with pressure gauge	**F74CS-xx/xxLF $^1/_2$" - $1^1/_4$":** High-quality synthetic material **F74CS-xxLF 1 $^1/_2$" - 2":** Lead-free brass
2	Rotatable connector piece, flange sealings, connecting nuts and fittings (F74CS only)	**F74CS-xx/xxLF $^1/_2$" - $1^1/_4$":** Dezincification-resistant brass (rotatable connection piece, tail pieces, connection nuts), unitec 300 (flange sealing) **F74CS-xxLF $^1/_2$" - 2":** Lead-free brass (rotatable connection piece, tail pieces, connection nuts), unitec 300 (flange sealing)
3	Clear filter bowl	Shock-resistant, clear transparent synthetic material
4	Fine filter	Stainless steel
5	Ball valve with drain connection	Lead-free brass (Ball Valve body), Stainless steel (ball), Plastic-durethan (drain adapter)
	Not depicted components:	
	Memory ring	Plastic
	Allen key **F74CS-xx/xxLF $^1/_2$" - $1^1/_4$":** WS6 **F74CS-xxLF 1 $^1/_2$" - 2":** WS8	Stainless steel
	Wrench for filter bowl and spring bonnet	Plastic
	Covers and reverse rinsing handle	Synthetic material filter mesh carrier, reverse rinsing handle and covers
	Diaphragm	Fibre-reinforced NBR
	Sealing washers	EPDM

METHOD OF OPERATION

The filter insert comprises an upper part and a lower combination section. When in the „filtering“ position, the small upper filter is closed so that the water can only pass through the main filter from outside to inside. When the ball valve is opened for reverse rinsing, the filter is pushed downwards until the water supply to the outer side of the main filter is stopped. Simultaneously, the water flow is opened to the upper part of the filter. The water needed for cleaning the filter passes through the upper sieve, the rotating impeller and the main filter from inside to outside. By this means, the filter is fully cleaned over its whole surface area at the full inlet pressure. The filter automatically switches over to the operating position when the ball valve is closed again.

TRANSPORTATION AND STORAGE

Keep parts in their original packaging and unpack them shortly before use.

The following parameters apply during transportation and storage:

Parameter	Value
Environment:	clean, dry and dust free
Min. ambient temperature:	5 °C
Max. ambient temperature:	55 °C
Min. ambient relative humidity:	25 % *
Max. ambient relative humidity:	85 % *

*non condensing

INSTALLATION GUIDELINES

Setup requirements

- The installation site has to be frost-proof and the protection of the device from chemicals, paints, detergents, solvents and their vapours and environmental influences must be guaranteed
- Install in horizontal or vertical pipework with filter bowl downwards
  - This position ensures optimum filter efficiency
- Install shut-off valves
- These filters are armatures which need to be maintained regularly
- Ensure good access
  - Pressure gauge can be read off easily
  - Degree of contamination can be easily seen with clear filter bowl
  - Simplifies maintenance and inspection
- It is recommended that a straight section of pipework at least five times the nominal valve size is provided after the filter (according to DIN EN 806-2)
- Fit immediately after water meter
- Related to the EN 806-2 it is recommended to install the filter immediately after the water meter
- In order to avoid flooding, it is recommended to arrange a permanent, professionally dimensioned wastewater connection

Installation Example

F74CS-xx/xxLF $^1/_2$" - 1$^1/_4$"

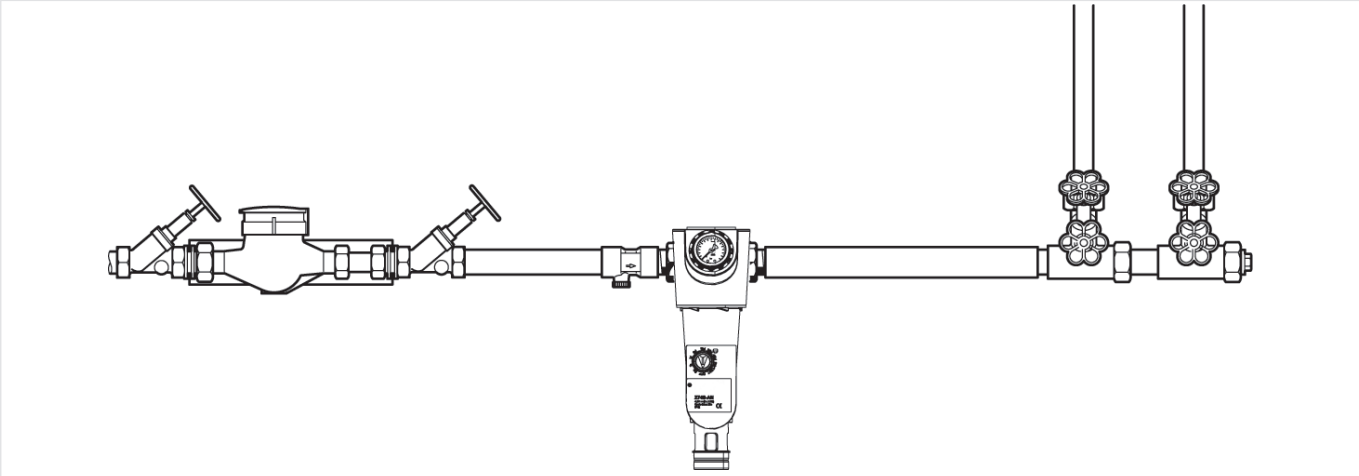

F74CS-xxLF 1$^1/_2$" - 2"

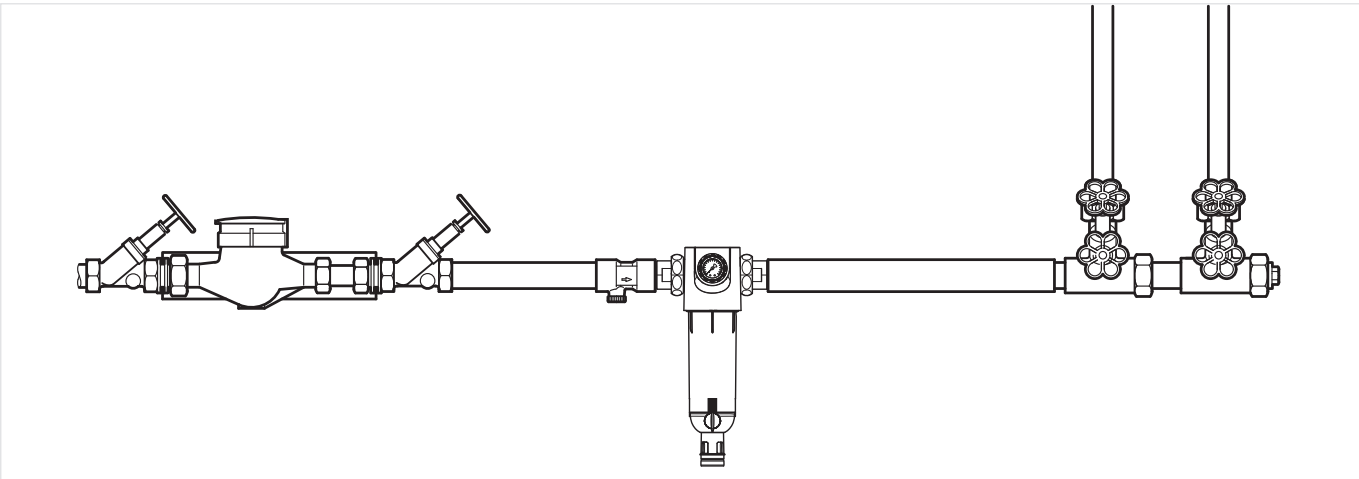

TECHNICAL CHARACTERISTICS

kvs-Values

Connection sizes:	15	20	25	32	40	50
k_{vs}-value (m^3/h):	5.3	7.9	9.0	10.0	16.0	20.0

Pressure drop characteristics

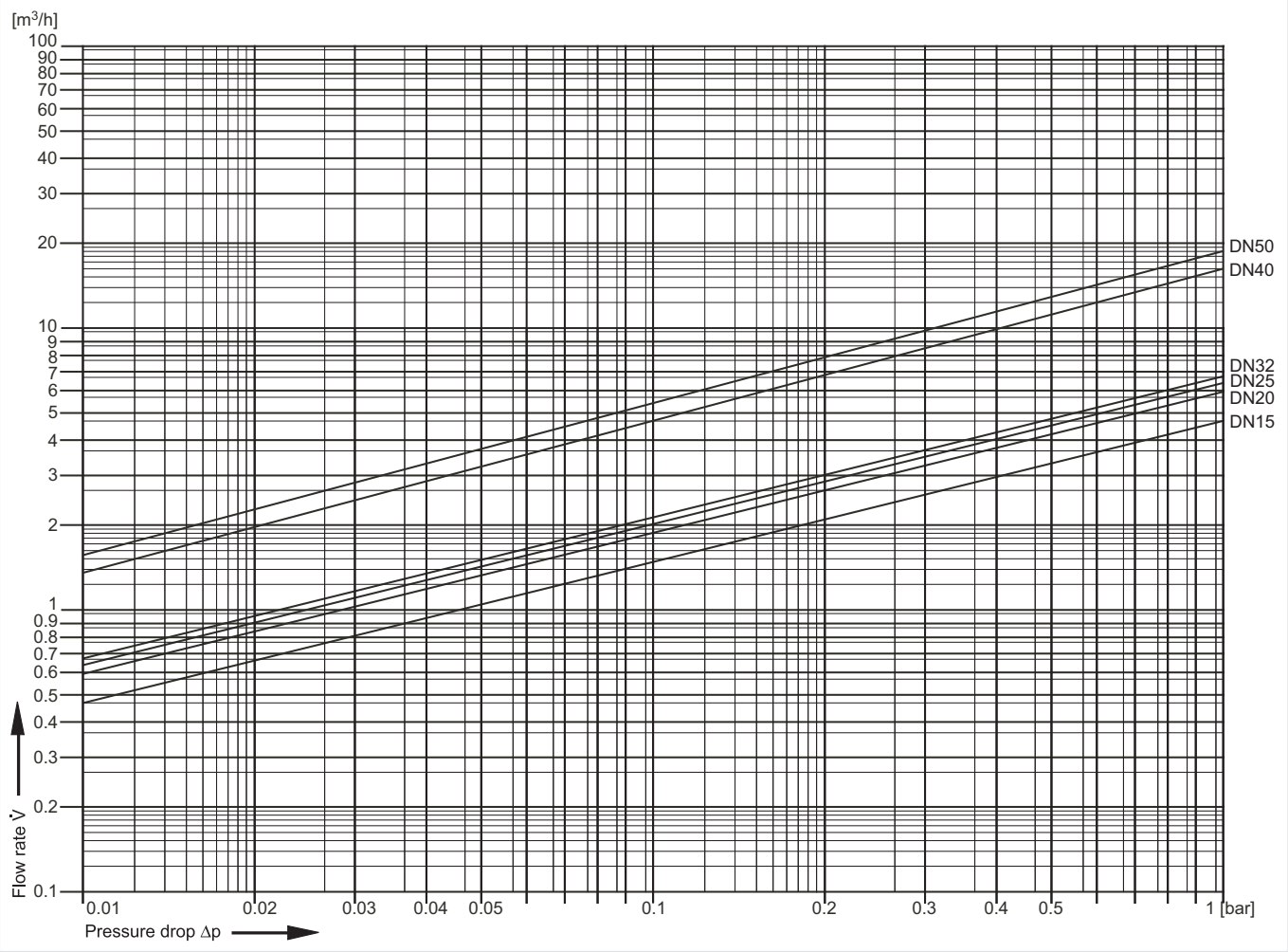

DIMENSIONS

Overview

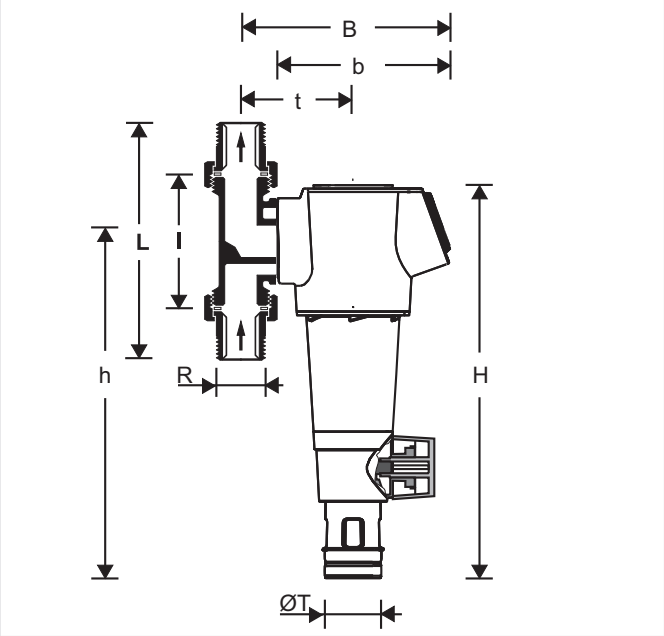

F74CS-xx/xxLF $^1/_2$" - 1 $^1/_4$"

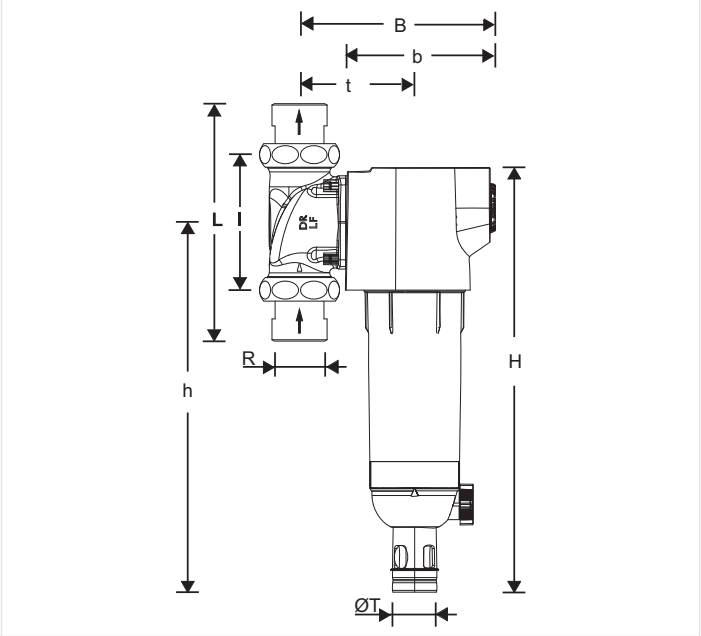

F74CS-xxLF 1 $^1/_2$" - 2"

Parameter		Values					
Connection sizes:	R	$^1/_2$"	$^3/_4$"	1"	1$^1/_4$"	1$^1/_2$"	2"
Nominal sizes:	DN	15	20	25	32	40	50
Weight:	kg	2.1	2.1	2.3	2.6	9.273	10.121
Dimensions:	H	353	353	353	353	478	478
	h	298	298	298	298	416	416
	L	150	158	179	197	246	267
	l	90	90	100	105	150	150
	B	178	178	178	182	216	216
	b	150	150	150	150	187	187
	t	92	92	92	96	130	130
	ØT	50	50	50	50	50	50
Flow value at Δp=0.2 bar	m^3/h	2.4	3.4	3.9	4.4	7.2	8.9
Flow value at Δp=0.5 bar:	m^3/h	3.8	5.5	6.2	7.0	11.5	14.1
DVGW registration number:		NW-9301 CL 0456					

Note: All dimensions in mm unless stated otherwise.

ORDERING INFORMATION

The following tables contain all the information you need to make an order of an item of your choice. When ordering, please always state the type, the ordering or the part number.

Options

The filter is available in the following sizes: $^1/_2$", $^3/_4$",1 $^1/_2$", 1$^1/_4$", 1 $^1/_2$", 1" and 2".

• standard

- not available

for connection sizes $^1/_2$" - 1 $^1/_4$"

		F74CS-...AA	F74CS-AC	F74CS-...AD	FN74CS-1A
Connection type:	With rotatable connector piece, filter mesh size 100 µm	•	-	-	-
	With rotatable connector piece, filter mesh size 50 µm	-	•	-	-
	With rotatable connector piece, filter mesh size 200 µm	-	-	•	-
	Retrofit version without rotatable connector piece, filter mesh size 100 µm	-	-	-	•

Note: ... = space holder for connection size

for connection sizes $^1/_2$" - 2"

		F74CS-...LFAA	FN74CS-1LFA	FN74CS-2LFA
Connection type:	With rotatable connector piece, filter mesh size 95/110 µm, lead-free materials	•	-	-
	Retrofit version without rotatable connector piece, filter mesh size 95/110 µm, lead-free materials (for DA74CS-xxLFA rotatable connections $^1/_2$" - 1 $^1/_4$")	-	•	-
	Retrofit version without rotatable connector piece, filter mesh size 95/110 µm, lead-free materials (for DA74CS-xxLFA rotatable connections 1 $^1/_2$" - 2")	-	-	•

Note: ... = space holder for connection size

Note: Ordering number example for 2" and type LFAA valve: F74CS-2LFAA

Accessories

	Description		Dimension	Part No.
	DA74	**Rotatable connector piece** For connection of retrofit filters and filter combinations		
			$^1/_2$"	DA74CS-1/2A
			$^3/_4$"	DA74C-3/4A
			1"	DA74C-1A
			$1^1/_4$"	DA74C-11/4A
		lead-free	$^1/_2$"	DA74CS-1/2LFA
		lead-free	$^3/_4$"	DA74CS-3/4LFA
		lead-free	1"	DA74CS-1LFA
		lead-free	$1^1/_4$"	DA74CS-11/4LFA
		lead-free	$1^1/_2$"	DA74CS-11/2LFA
		lead-free	2"	DA74CS-2LFA
		lead-free, no connection parts	$^1/_2$" - $^3/_4$"	DA74CS-1/2LFE
		lead-free, no connection parts	1"	DA74CS-1LFE
		lead-free, no connection parts	$1^1/_4$"	DA74CS-11/4LFE
		lead-free, no connection parts	$1^1/_2$" - 2"	DA74CS-2LFE
	ZR74CS	**Double ring wrench for removing the filter bowl**		
			$^1/_2$" + $1^1/_4$"	ZR74CS
	ZR10K	**Double ring wrench for removing the filter bowl**		
			$1^1/_2$" + 2"	ZR10K-11/2
	Z74S-AN for $^1/_2$" - $1^1/_4$"	**Automatic reverse rinsing actuator** For automatic filter cleaning at presettable intervals		
				Z74S-AN
	Z11S	**Automatic reverse rinsing actuator** For automatic filter cleaning at presettable intervals		
		230 V, 50/60 Hz, 10 with moulded Schuko electrical plug		Z11S-A
		24 V, 50/60 Hz, 10 without electrical plug		Z11S-B
	D06FR	**Retrofit pressure reducing valve insert set** For retrofitting to upgrade to a filter combination		
			$^1/_2$" + $1^1/_4$"	D06FR-1A

Spare Parts

F74CS/FN74CS Fine filters from 2010/2020 (lead-free) onwards

Overview

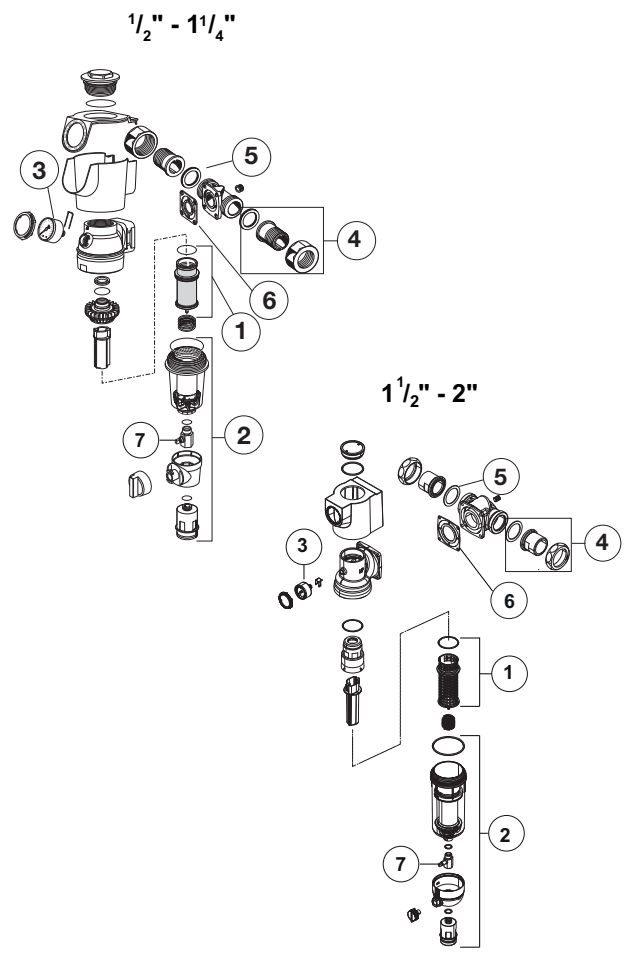

	Description	Dimension	Part No.
1	**Filter insert complete**		
	50 µm	1/2" - 1 1/4"	AF74-1C
	100 µm	1/2" - 1 1/4"	AF74-1A
	200 µm	1/2" - 1 1/4"	AF74-1D
	20 µm	1 1/2" - 2"	AF11S-11/2B
	50 µm	1 1/2" - 2"	AF11S-11/2C
	100µm	1 1/2" - 2"	AF11S-11/2A
	200 µm	1 1/2" - 2"	AF11S-11/2D
2	**Clear filter bowl**		
		1/2" - 1 1/4"	KF74CS-1A
	lead-free	1/2" - 1 1/4"	KF11SB-1A
	lead-free	1 1/2" - 2"	KF11SB-2A
3	**Pressure gauge rear connection thread G1/4"**		
		0 - 16 bar	M74CS-A16
4	**Connection set threaded connection**		
		1/2"	VST06-1/2AR
		3/4"	VST06-3/4A
		1"	VST06-1A
		1 1/4"	VST06-11/4A
	lead-free	1/2"	VST74CS-1/2LFA
	lead-free	3/4"	VST06-3/4LFA
	lead-free	1"	VST06-1LFA
	lead-free	1 1/4"	VST06-11/4LFA
	lead-free	1 1/2"	VST74CS-11/2LFA
	lead-free	2"	VST06-2LFA
5	**Union seal washer (10 pcs.)**		
		3/4"	0901444
		1"	0901445
		1 1/4"	0901446
		1 1/2"	0901447
		2"	0901448
6	**Flange seal**		
		3/4" - 1 1/4"	5975900
		1 1/2" - 2"	5975901
7	**Ball valve complete**		
	lead-free		KH11S-1LFA

Manufactured for
and on behalf of
Pittway Sàrl, Z.A., La Pièce 4,
1180 Rolle, Switzerland

For more information
homecomfort.resideo.com/europe
Ademco 1 GmbH, Hardhofweg 40,
74821 MOSBACH, GERMANY
Phone: +49 6261 810
Fax: +49 6261 81309

© 2021 Resideo Technologies, Inc. All rights reserved.

Subject to change. EN0H-1186GE23 R0121