elco

INDUSTRY
CATALOGUE

www.elco-burners.com

ПРОМЭЛЕКТРОНИКА / sales@prom-elec.com

INDUSTRY CATALOGUE

THE COMPANY — p. 4

RANGE OVERVIEW — p. 20

EK-TRON RANGE — p. 36

EK EVO RANGE — p. 66

NEXTRON RANGE — p. 164

N RANGE — p. 232

HO-TRON RANGE — p. 262

GHO-TRON RANGE — p. 282

DUOBLOCK RANGE — p. 296

GAS TRAINS — p. 304

CONTROL UNITS — p. 315

OPTIONS AND ACCESSORIES — p. 317

CUTTING-EDGE BURNERS FOR HEATING AND INDUSTRIAL APPLICATIONS

OUR COMPANY

Since its foundation in 1928, ELCO has always been a specialist in burners conception and manufacturing. By linking a strong innovative ability to a continued developing drive, ELCO has designed high performing and reliable burners as well as corresponding services throughout the years, and is today one of the leaders in the field of combustion technology.

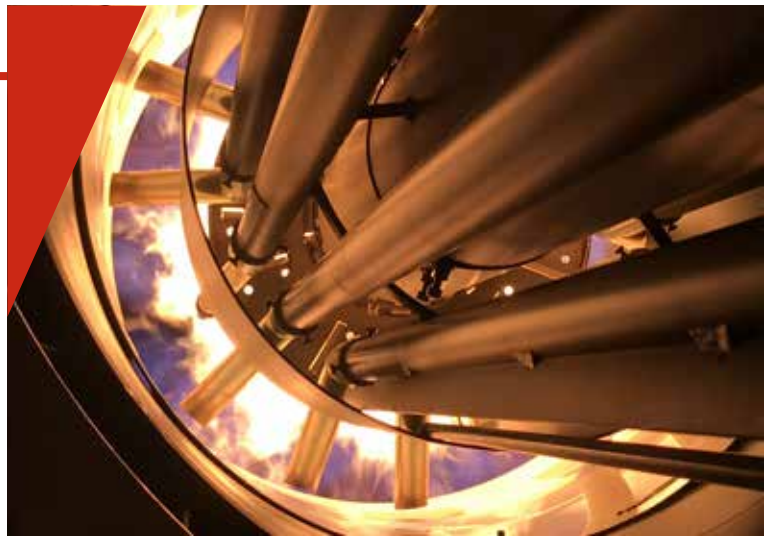

OUR MISSION

ELCO always looks for the best technologies and continues to develop new ones to improve the efficiency of its solutions.
Our R&D Laboratories are committed to develop innovative technological solutions allowing to:

- optimise the running of the installations lowering costs;
- offer service friendly products easy to maintain;
- preserve the environment lowering acoustic and pollutant emissions.

OUR KNOWLEDGE

Your contacts at ELCO and its partners are recognised experts with years of experience. Our worldwide support starts from concept creation to planning, design and project management up to commissioning and on-going operation of the plant throughout its life cycle.
As an ELCO customer, you can count on us for products that guarantee reliability, quality and high performance in any application and working condition.

OUR SERVICE NETWORK

Taking advantage of a staff composed of technicians and engineers with a long experience, ELCO is able to provide professional support to the customer in order to define together the best solution and to develop and manage the project through its entire life-cycle.
ELCO Service activities define the standards in the market and each customer can rely on high performance and reliabile products.

OUR INNOVATIVE SOUL

The perfect combination of expertise and inventive spirit provides ELCO the drive to constantly improve its product lines and create new ones to meet market demands, in particular those related to the reduction of polluting emissions.
The growing attention to issues related to the environment has led to the development of advanced combustion technologies that allow NOx emissions to be drastically reduced and which use alternative fuels, as happens for example with hydrogen burners, a product of the future that ELCO is already able to offer today.

ErP COMPLIANT

ULTRA LOW NOx

H2

OUR ROLE IN THE ENERGY TRANSITION

THE IMPORTANCE OF HYDROGEN IN THE DECARBONIZATION OF THE INDUSTRY

In recent years, decarbonization has become a fundamental issue in our lives, not only for improving the environment but also as a new way of understanding industrial relations and improving our production processes. After many years of intense debate, many countries are now committed to changing the global economy in a climate-friendly way.

In this context, hydrogen shall be deployed as a major future energy source, which is why various development projects are dealing with hydrogen production, transport and storage as well as feeding it into existing gas networks.
Hydrogen is thought to be able to provide up to 24% of total energy needs by 2050. This means that in the next few years we will have to deal with the transformation of a large number of plants that consume traditional fuels to make them suitable to work with hydrogen or with mixtures of gases, with hydrogen as the main fuel.

Hydrogen is the most occurring element in the universe and one of the most common elements on earth, where it is bounded in hydrocarbon compounds, in alkaline solutions or in water. However, elemental hydrogen H_2 can be found only in traces in the earth's atmosphere and must be obtained through several processes.

TYPES OF HYDROGEN

GREY HYDROGEN

/ Product of the steam reforming of natural gas (where CO_2 emissions are produced); currently, this represents about 90% of the hydrogen generated for industrial purposes

BLUE HYDROGEN

/ Produced from natural gas, with subsequent storage or disposal of the CO_2 underground/under the seabed (CCS technology)

GREEN HYDROGEN

/ Obtained by (comparatively expensive) electrolysis/power-to-gas processes based on renewable energies

The expected decrease in the cost of electrolysers and the technological developments in renewable energy technologies will soon create the conditions for large-scale green hydrogen production plants. Consequently, the production of green hydrogen could become easier and more convenient, and in the future become a way to manage, store and reuse energy produced from renewable sources:

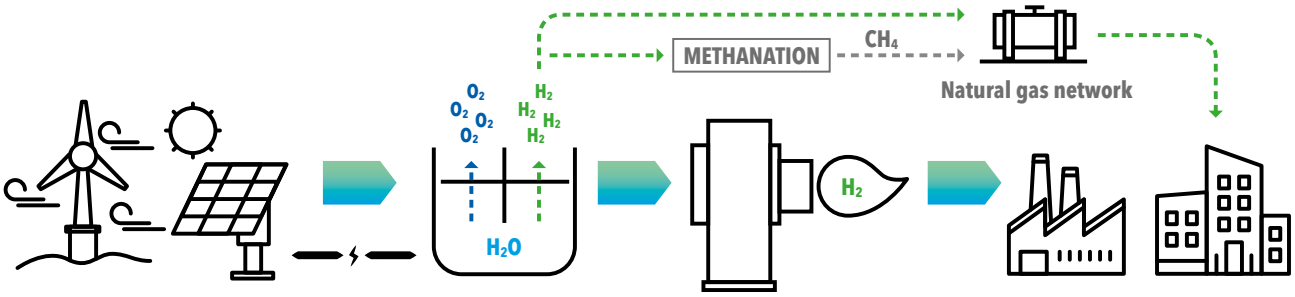

/ Renewable energies
Excess renewable energy, due to periods of low demand, creates challenges for network stability

/ Electrolysis
Excess electricity generated at low prices is funnel-led into electrolysers that split water into hydrogen and oxygen

/ Hydrogen combustion
Hydrogen can be injected into the main gas networks and blended with natural gas as a form of energy storage or can be used directly for industrial processes

Compared with natural gas, hydrogen has several peculiar characteristics:
- it is colorless, odorless and tasteless;
- it is around 8 times lighter and can volatilize very quickly through porous materials or through the smallest leaks;
- the calorific value is lower by a factor of 3/3,5 than most commercially available natural gases;
- it has an extremely wide flammability range and the flame (almost invisible) burns about 8 times faster than natural gas;
- it needs 15 times less spark energy for ignition than natural gas and ignition speed is about 7 times higher.

The theoretical replacement of natural gas with hydrogen within a system causes enormous changes in the air demand, flame temperature, combustion quality, power output and, due to the different density, also regarding gas pressure losses.
For all these reasons, integrate hydrogen into the energy mix requires a huge experience and specific know-how.

OUR EXPERIENCE WITH HYDROGEN

HYDROGEN BURNERS

Green combustion technologies ready for the future

H_2 Ready since the 90s

ELCO has been manufacturing Low NOx combustion systems for several decades and can count on a strong expertise also with hydrogen applications, developed by our R&D Department since the 90s. Thanks to the know-how developed on the field, ELCO is one of the few suppliers in the world that can already offer safe, reliable and performing Low NOx hydrogen burners, guaranteeing excellent results in terms of emission level, flame stability and energy efficiency.

INSTALLATION REFERENCES WITH HYDROGEN BURNERS

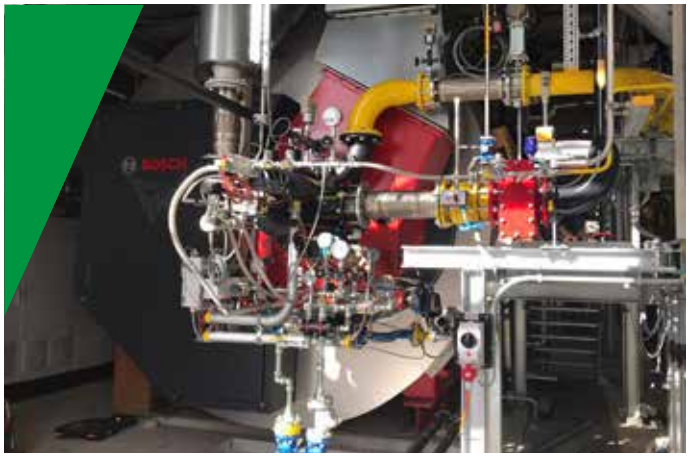

Location: Switzerland

Fuels: hydrogen, natural gas, light oil
H_2 pressure: 500 mbar

Maximum power output: 13,6 MW

Burner: RPD 70 GGL-EU1-So
Hot air version (130°C), IP65, FGR System

Location: Jordan

Fuel: hydrogen, natural gas, heavy oil

Maximum power output: 6,2 MW

Burner: RPD 30 GS-ED-So
Hot air version (270°C), IP54

Burner	Fuels	Country	Date
RPD 30	H_2 / Natural gas	China	1995
RPD 30	H_2 / Heavy oil	China	1996
RPD 60	H_2 / Natural gas	China	1996
RPD 60	H_2 / Heavy oil	China	2002
RPD 20	H_2 / Light oil	Saudi Arabia	2003
RPD 60	H_2 / Heavy oil	China	2004
RPD 30	H_2 / Heavy oil	India	2005
RPD 60	H_2 / Heavy oil	China	2005
RPD 60	H_2 / Natural gas	Taiwan	2006
RPD 70	H_2 / Heavy oil	China	2006
RPD 40	H_2 / Heavy oil	India	2007
RPD 60	H_2 / Natural gas	India	2008
RPD 40	H_2 / Heavy oil	India	2008
EK-DUO 2.550	H_2	Belgium	2008
RPD 40	H_2 / Heavy oil	India	2010
RPD 30	H_2 / Heavy oil	India	2010
RPD 30	H_2 / Heavy oil	Syria	2010
RPD 50	H_2	China	2010
RPD 30	H_2 / Natural gas	India	2010
RPD 40	H_2 / Natural gas	India	2011
RPD 30	H_2 / Heavy oil	India	2011
RPD 30	H_2 / Natural gas	Belgium	2012
RPD 50	H_2 / Natural gas	China	2012
RPD 40	H_2 / Natural gas	India	2012
RPD 50	H_2 / Natural gas	China	2013
RPD 60	H_2 / Natural gas / Carbide gas	China	2013
RPD 80	H_2 / Light oil	Qatar	2013
RPD 30	H_2 / LPG	India	2014
RPD 30	H_2 / Heavy oil	Indonesia	2014
RPD 30	H_2 / LPG	India	2015
RPD 70	H_2 / Coke gas / Carbide gas	China	2015
RPD 40	H_2 / Natural gas	Kuwait	2016
RPD 30	H_2 / Heavy oil	Jordan	2017
RPD 50	H_2 / Heavy oil	India	2017
RPD 50	H_2 / Heavy oil	India	2017
RPD 40	H_2 / Heavy oil	India	2018
RPD 70	H_2 / Natural gas / Light oil	Switzerland	2019
RPD 70	H_2 / Natural gas / Light oil	Taiwan	2019
RPD 70	H_2 / Natural gas	Taiwan	2019
RPD 40	H_2 / Natural gas / Heavy oil	Saudi Arabia	2019
RPD 50	H_2 / Natural gas	India	2019

TECHNICAL ASSISTANCE

For safe and efficient operation of your burner system it is very important that the burner is commissioned by a competent person. The combustion will be optimally adjusted over the whole power range of the burner, and all the safety devices will be tested.
To keep your installation in good conditions, it is important to maintain the burner periodically. It is also very important to inspect all the safety devices to ensure that your system operates safely.
Fortunately, you can rely on the professional services of ELCO which can perform this service for you.

BURNER ACADEMY

In order to respond to the needs of our customers we created a Burner Academy, a real training school where the knowledge of our technicians is passed on to our trainees.
We provide the opportunity for boiler room personnel, operators and engineers to attend a series of training sessions carried out on our test bench by highly qualified instructors, who hold the courses in English, German, French, Italian and Dutch language.
The Burner Academy uses various training locations where boilers are installed and where people can be trained in theory and in practice. We offer courses at different levels and also the possibility to handle all your needs in a customer-specific training.

RELIABLE SUPPLY OF SPARE PARTS

Spare parts have always had a great importance inside the ELCO world. Considering the high amount of parts involved in every single product, some of these parts might naturally need to be replaced. ELCO can count on an International network offering original spare parts in order to guarantee the highest quality, reliability and safe continued operation of the appliance.

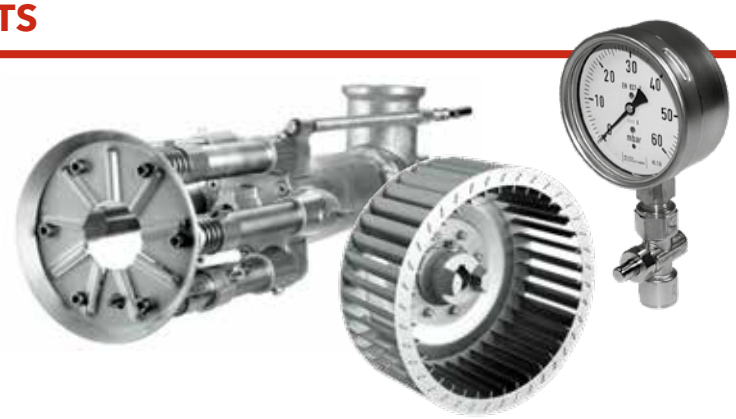

WORLDWIDE NETWORK

Capitalising on almost 100 years of work experience, ELCO has been capable to build up loyal partnerships and today can count on reliable Partners all over the World.
Combining an instinctively global perspective with a genuinely multicultural approach ELCO today offers you skilled and experienced experts available in more than 70 Countries.

- 3 production plants
- 6 commercial branches in Europe
- 2 Sales Offices in Dubai and China
- Distribution in more than 70 Countries
- Strong commercial presence through a network of reliable dealers and partners

Service Network

In Western Europe, ELCO has a well organised service network. Outside Western Europe ELCO uses a network of partners, consisting of well-trained local engineers, to carry out its service operations.
These technicians are able to perform both commissioning and local service and they do it in a very professional and efficient way.

ELCO ON THE WEB

We are constantly looking forward to provide to our customers new technologies, products and services.
Stay always up to date on the latest news from the ELCO World visiting our website:

www.elco-burners.com

Navigate to explore the ELCO proposal and choose the perfect product to fit your needs, and follow us to know more about our new activities and projects.

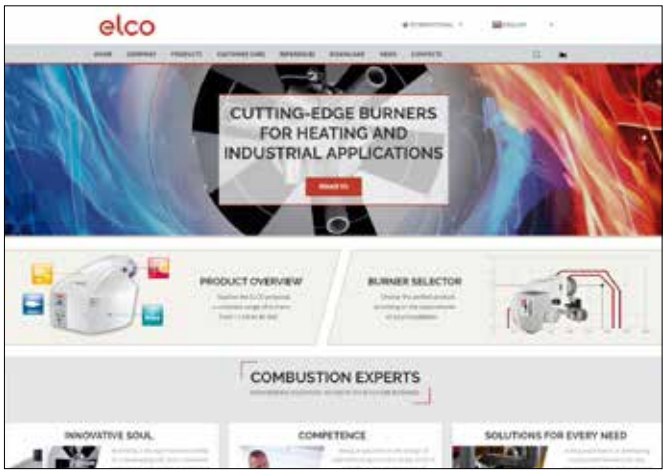

ELCO SYSTEMS AND TECHNOLOGIES

To constantly improve its products, ELCO is committed to develop innovative technological solutions allowing to optimise the running of the installations, to ease technicians work, and naturally to preserve the environment.
In order to provide quick responses to its market's demands, the range of ELCO burners is entirely conceived around a consistent combination of Systems.

MDE2 SYSTEM

Permanent communication of information easy to use

Equipped with the MDE2 System, the universal language Elcogram and the 5-button keyboard, ELCO burners adjust themselves and constantly communicate to the technicians and operators:
- real time information about each ignition and during the running;
- statistical information about burner operations recorded during the year before the maintenance operations.

"ELCOGRAM": universal language based on symbols and numerical data

Display shows all information for daily operation

Menu-driven burner setup and operation via keypad

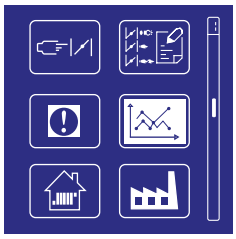

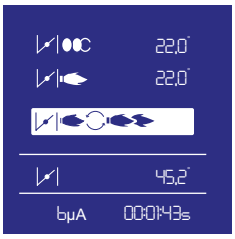

Elcogram, a universal language

As ELCO products are distributed worldwide, the company has developed a universal language composed of pictograms and numerical data.
The pictograms use the majority of the symbols used on the wiring diagrams which are recognised and understood by all Nations.
This ensures that information is easier to read than ever before.

CMS SYSTEM

The evolution of combustion management systems

CMS is a state of the art system for burner management that sets new standards in control automation. The system provides a full combustion management solution that meets all relevant safety standards, and is certified for all main markets and Standards.
CMS system is simple and easily configurable to meet a wide range of application requirements, from low cost to high end solutions, for industrial or residential applications.
The CMS grants efficient communication via BUS and is extremely flexible due to the fact that is fully configurable, fully compatible with external devices/systems and fully scalable, allowing additional functions, such as VSD fan control, oxygen trim and CO control.
A wide number of interfaces are available, from low-cost keypad to high-resolution touchscreens, allowing intuitive and easy interaction between user and machine.

ELCO SYSTEMS AND TECHNOLOGIES

GEM SYSTEM

Electronic burner control: high safety and low costs

The use of electronic technologies in burner control systems helps to reduce running costs, improve reliability of operation and lower pollutant emissions.
The electronic combustion manager used on ELCO burners are responsible not only for the burner control but also for the fuel/air regulation. Data stored electronically has replaced the mechanical characteristic curve and help to achieve an unprecedented level of precision in air/fuel ratio regulation across the burner's entire control range, a pre-requisite for efficient, energy- and cost-saving operation.
An additional advantage of the GEM is that it provides specific information on all the commands and current situation of the overall system: these can be accessed directly or by remote control.
The digital programming is user-friendly, it is carried out through the display of the MDE2 System or through a PC by using a simple procedure facilitated by easy instructions in a clear language.

VARIATRON

Speed regulation: noise reduction and energy saving

To improve the performance of heating or industrial systems, ELCO applies Variatron (fan speed control).
Conventionally, the air in modulating burners is regulated by an air flap. In the partial load range, a large amount of the air pressure generated by the ventilator goes to waste. With speed regulation, the speed of the combustion/air fan is varied continuously depending on the burner output required: full speed is reached only at maximum burner output. In the predominant partial load range, lower speed translates into significant reductions in power consumption and noise emissions.
The Variatron operates in step with the air damper both with the GEM System, which guarantees a combustion with minimum air excess by continuously monitoring all operating conditions.
Application of the Variatron to ELCO burners results in:

- electrical consumption savings in the order of 50%;
- turndown ratio of up to 1:10, resulting in perfect adaptation to system requirements and improvement in average seasonal efficiency, in particular with condensing or low-temperature boilers or specific processes;
- silent start-up and average overall noise reduction between 2 and 12 dB(A) (at minimum and maximum power).

RTC SYSTEM

Rapid and easy maintenance solutions

The functional housing design of all ELCO burners, combined with the innovative combustion head technologies, creates the RTC System (Retained Head Adjustment) and provides the user with several advantages:

- full access to all components, by simply removing the upper cover;
- complete removal of the combustion head and access to its internal components with a single operation, without removing the burner from the boiler or disconnecting the gas train;
- maintenance of the adjustments made to the combustion head, which are not changed during service operations;
- quick cleaning of mechanical components, thanks to their optimized arrangement;
- reduced servicing times through the use of standard nuts, bolts, screws and pipe fittings, which can be adjusted using only a few tools.

The combination of all these technical solutions makes it possible to simplify and speed up all the operations carried out on the burner, reducing downtime and cost of maintenance.

COMBUSTION TECHNOLOGIES

FREE FLAME (F3, UF)

The pinnacle of low-polluting burner engineering

The Free Flame combustion technology is based on the internal recirculation of the flue gas, combined with high speed flow of the fuel air mixture.
The flame stabilizes at a certain distance from the combustion head, thus leaving space for the mixture of reagents and flue gas.
This phenomenon greatly reduces NOx emissions. The flame seems to float in the furnace, thus giving the system its name: «Free Flame».

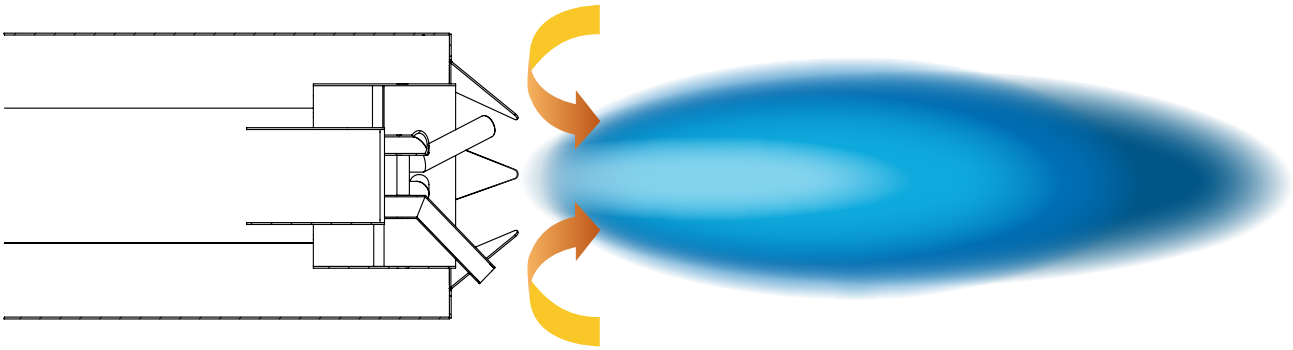

DIAMOND HEAD (U2, U2N, U3)

Low emissions and reliable operation

The principle of Diamond Head technology is based on the internal recirculation of the combustion flue gases. The gases are partially drawn into the base of the flame via triangular openings placed at the end of the combustion head.
The position and geometry of the gas injectors are such that a significant quantity of combustion flue gas is drawn in and rapidly mixed with air and gas at the root of the flame. This mixture crosses the main reaction area, slowing the combustion, which resultes in lowering the main flame temperature. The result of this staging combustion is a significant reduction in the formation of thermal nitrogen oxides.
The advantage of this internal recirculation technique is an automatic adjustment to the quantity of recycled combustion flue gases: the volume of the flame is always as low as possible, which has a very minor effect on the nominal power of the generator, unlike external recirculation systems.

MULTI-STAGE HEAD (X2)

Clean emissions and flame stability

The principle of the Multi-Stage combustion head is based on the separation of the flame in multiple areas. The result of this process is a significant reduction of the temperature of the flame and, as a direct consequence of this, a drop of the NOx emission.
The implementation of this technology does not result only in lowering the pollutant emissions but also assure a very stable flame in all operation conditions.

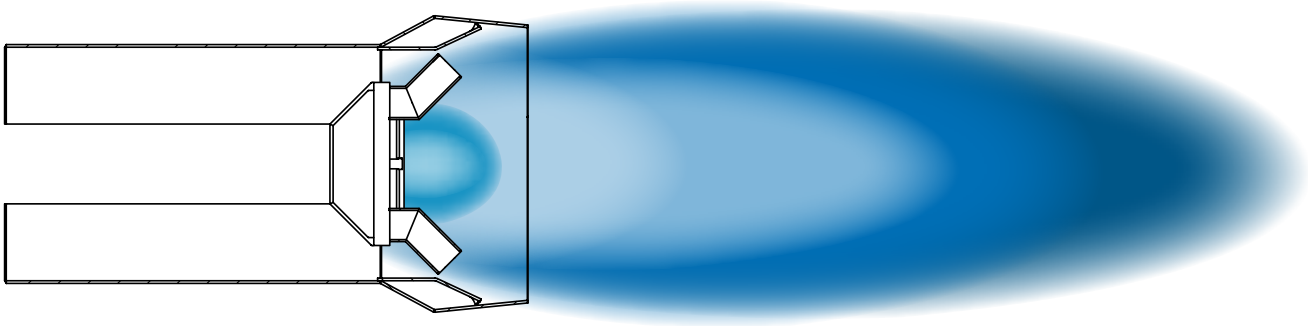

BLUE TRIPLE HEAD (FX)

Extreme low NOx values and high flame stability

The principle of the "Blue Triple Head" is based on a stage combustion combined with an internal recirculation of the combustion flue gases.
Multi-Stage Combustion allows stable nucleus flame and highest internal flue gas recirculation in next stage.
The result is a very low NOx value, a CO tending to 0 and a high stability that guarantee the limits even in standard combustion chambers.

FGR SYSTEM

Ultra low NOx solutions to reach emissions of less than 30 mg/kWh

ELCO has an enormous experience in the application of low emissions systems, going back to the early 90s, when the first Low NOx installation have been successfully commissioned.
Thanks to this experience and the technologies developed over the years, ELCO offers a wide range of products which use the external FGR technology to reduce NOx emissions and satisfy even the most stringent regulations.
The external recirculation sends a mixture of air and flue gas to the burner combustion head. The gases are mixed upline of the combustion process by the burner fan (for monoblock units) or by the external fan (in case of duoblock burners).

Functional scheme on monoblock burners

The FGR system on monoblock burners provides that the flue gas is drawn in by the burner fan. The installer must therefore install a line connecting the flue gas outlet to the burner fan inlet.
The extraction point is generally at the base of the flue pipe, where the pressure is close to zero. A suction is generated in the burner intake box which is a function of the fan curve and the air damper position.
In order to ensure an adequate rate of flue gas from the stack and thus to provide the required NOx reduction, the pipeline between the flue and the burner must be sized to minimise the pressure drop.

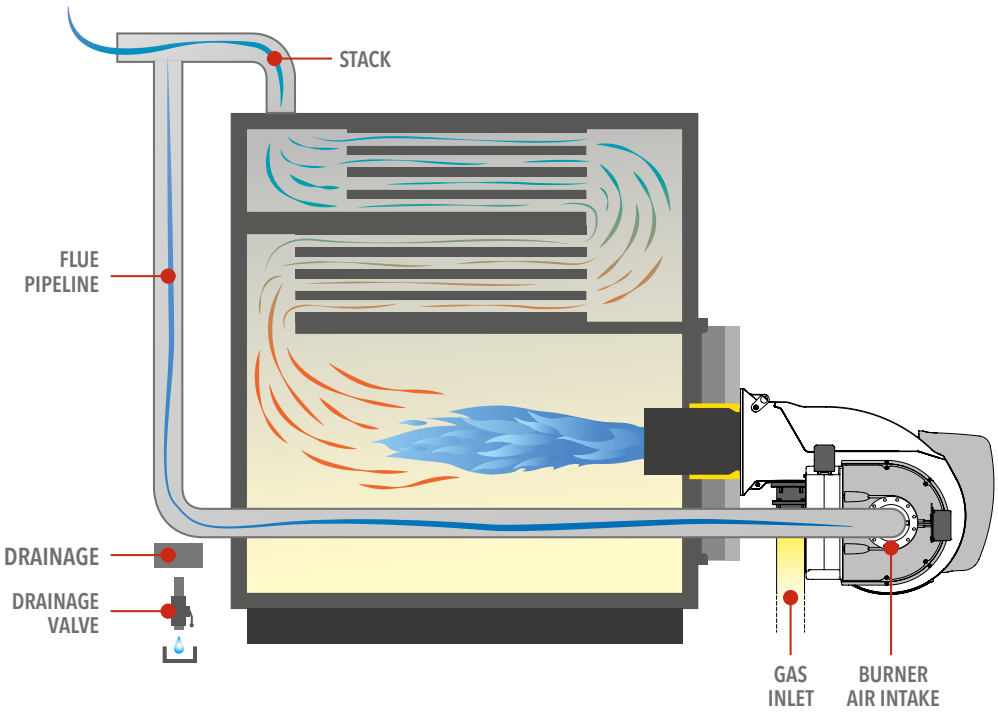

Functional scheme on duoblock burners - Layout «A»

The FGR system for duoblock burners, since the draught fan is installed far from the burner, needs a layout different from the one of the monoblock ones. On such a layout, the flue duct ends upstream of the draught fan. In order to produce the needed suction to get flue from the stack and to mix it with the fresh air, the air damper is fitted upstream of the draught fan and upstream of the flue duct end, too.
As for monoblock burner, the flue duct has to be properly sized in order to minimize the pressure drop.

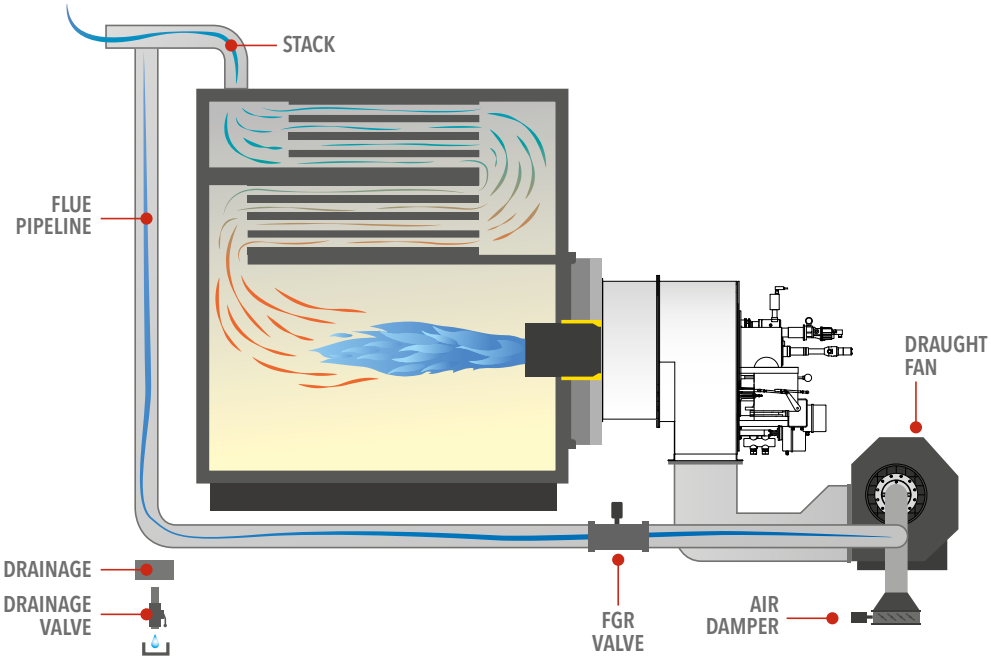

Functional scheme on duoblock burners - Layout «B»

An alternative layout to layout «A» provides a further draught fan dedicated to the flue. It takes the flue from the stack and pushes it into the duct between the burner and the fresh air draught fan. The flue damper is just after the flue fan. The air damper is on burner board and therefore it adjusts the rate of the mixture between the flue and the fresh air.
As for monoblock burner, the flue duct has to be properly sized in order to minimize the pressure drop.

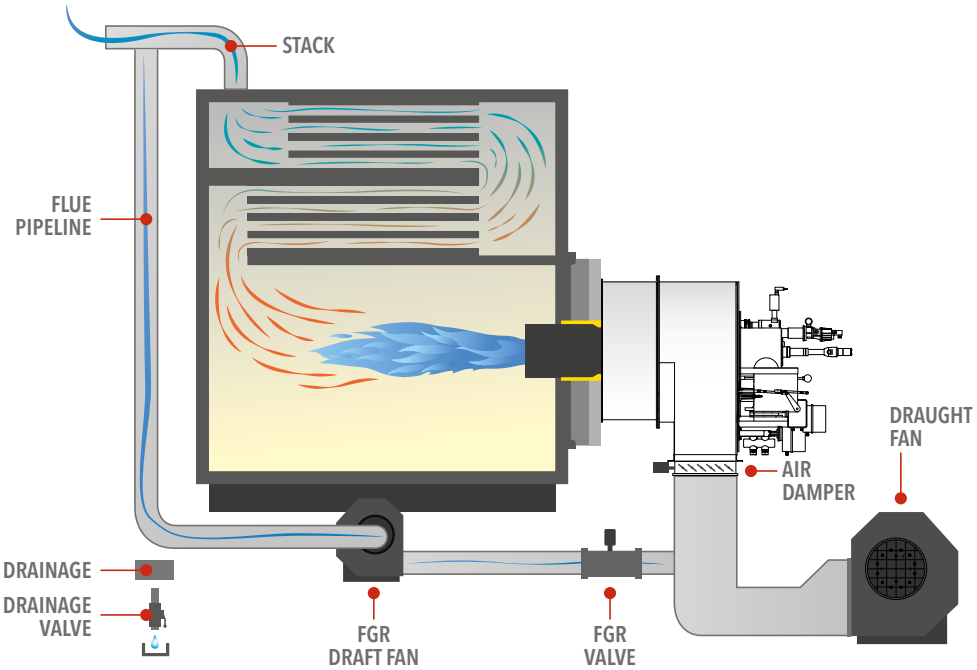

WORLDWIDE REFERENCES

Altchemnitz, Germany

Burners:
6x N11.22000 G-EU1

Total nominal output:
132 MW

Emissions:
NOx <80 mg/kWh

Białystok, Poland

Burners:
2x RPD 70 G-EU2

Total nominal output:
41 MW

Emissions:
NOx <80 mg/kWh

Beijing, China

Burners:
2x N10.16000 G-EU2 FGR

Total nominal output:
32 MW

Emissions:
Installation with FGR system to reach NOx values below 30 mg/kWh

WORLDWIDE REFERENCES

Xining, China

Burners:
12x RPD N 70 G-EU1 FGR

Total nominal output:
252 MW

Emissions:
Installation with FGR system to reach NOx values below 30 mg/kWh

Seoul, South Korea

Burners:
7x N8.7100 G-EU3

Total nominal output:
50 MW

Emissions:
NOx <80 mg/kWh

Stavanger, Norway

Burners:
2x EK-DUO 4.1600 G-E

Total nominal output:
32 MW

Emissions:
NOx <80 mg/kWh

WORLDWIDE REFERENCES

Rostock, Germany

Burners:
2x RPD 90 G-EFX

Total nominal output:
65 MW

Emissions:
NOX <60 mg/kWh

Zhangjiakou, China

Burners:
Plant 1: 2x RPD 160 G EU1 FGR
1x RPD 130 G EU1 FGR
Plant 2: 2x RPD 130 G EU1 FGR

Total nominal output:
355 MW

Emissions:
Installation with FGR system to reach NOx values below 30 mg/kWh

Seoul, South Korea

Burners:
3x N10.16000.45 G-EU2 FGR
1x N10.12000.37 GL-EUF

Total nominal output:
80 MW

Emissions:
NOx <80 mg/kWh

WORLDWIDE REFERENCES

Beijing, China

Burners:
2x RPD N 90 G-EU1 FGR
2x RPD N 130 G-EU1 FGR

Total nominal output:
87 MW

Emissions:
Installation with FGR system to reach NOx values below 30 mg/kWh

Monza, Italy

Burners:
1x N11.19000 G-EU2

Total nominal output:
19 MW

Emissions:
Installation with FGR system to reach NOx values below 30 mg/kWh

Beijing, China

Burners:
1x EK EVO 8.5800 G-EU3 FGR
2x EK EVO 8.7100 G-EU3 FGR

Total nominal output:
21 MW

Emissions:
Installation with FGR system to reach NOx values below 30 mg/kWh

OUR PRODUCT RANGE

Our experience at combustion technology available in a complete range of burners from 11 kW to 80 MW:

Monoblock range:

VECTRON
11 - 2300 kW
- Gas
- Light oil
- Dual fuel
- Biofuel

PROTRON
15 - 550 kW
- Gas
- Light oil

EK-TRON
320 - 6050 kW
- Gas
- Dual fuel

NEXTRON
250 - 11200 kW
- Gas
- Light oil
- Dual fuel

EK EVO
250 - 13500 kW
- Gas
- Light oil
- Dual fuel

N
1300 - 22000 kW
- Gas
- Light oil
- Dual fuel

HO-TRON
68 - 17000 kW
- Heavy oil

GHO-TRON
414 - 17000 kW
- Heavy oil
- Dual fuel

Duoblock range:

D-TRON
230 - 42000 kW
- Gas
- Light oil
- Gas / light oil
- Heavy oil
- Gas / heavy oil

EK-DUO
600 - 16000 kW
- Gas
- Light oil
- Dual fuel

RPD N
3000 - 80000 kW
- Gas

RPD
500 - 80000 kW
- Gas
- Light oil
- Gas / light oil
- Heavy oil
- Gas / heavy oil

TWO STAGE PROGRESSIVE/MODULATING ELECTRONIC / Low NOx

EK-TRON 5.300 G-EF3	400 ... 2550 kW	p. 38
EK-TRON 6.350 G-EF3	400 ... 3100 kW	p. 38
EK-TRON 6.400 G-EF3	510 ... 3950 kW	p. 38
EK-TRON 7.500 G-EF3	700 ... 5030 kW	p. 38
EK-TRON 7.600 G-EF3	750 ... 5800 kW	p. 38

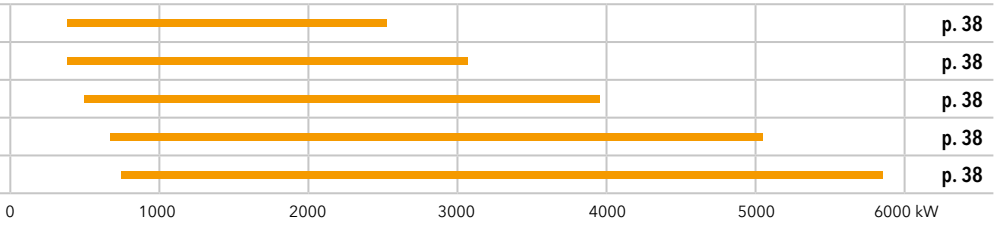

TWO STAGE PROGRESSIVE/MODULATING MECHANICAL / Low NOx

EK-TRON 5.300 G-RF3	400 ... 2550 kW	p. 42
EK-TRON 6.350 G-RF3	400 ... 3100 kW	p. 42
EK-TRON 6.400 G-RF3	510 ... 3950 kW	p. 42
EK-TRON 7.500 G-RF3	700 ... 5030 kW	p. 42
EK-TRON 7.600 G-RF3	750 ... 5800 kW	p. 42

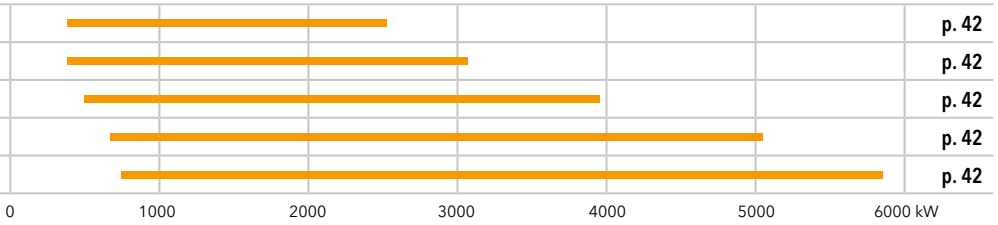

TWO STAGE PROGRESSIVE/MODULATING ELECTRONIC

EK-TRON 5.300 G-E	340 ... 2800 kW	p. 46
EK-TRON 6.350 G-E	400 ... 3450 kW	p. 46
EK-TRON 6.400 G-E	590 ... 4150 kW	p. 46
EK-TRON 7.500 G-E	750 ... 4850 kW	p. 46
EK-TRON 7.600 G-E	740 ... 6050 kW	p. 46

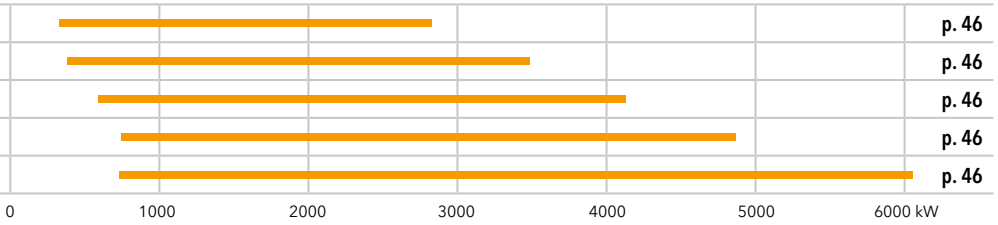

TWO STAGE PROGRESSIVE/MODULATING MECHANICAL

EK-TRON 5.300 G-R	340 ... 2800 kW	p. 50
EK-TRON 6.350 G-R	400 ... 3450 kW	p. 50
EK-TRON 6.400 G-R	590 ... 4150 kW	p. 50
EK-TRON 7.500 G-R	750 ... 4850 kW	p. 50
EK-TRON 7.600 G-R	740 ... 6050 kW	p. 50

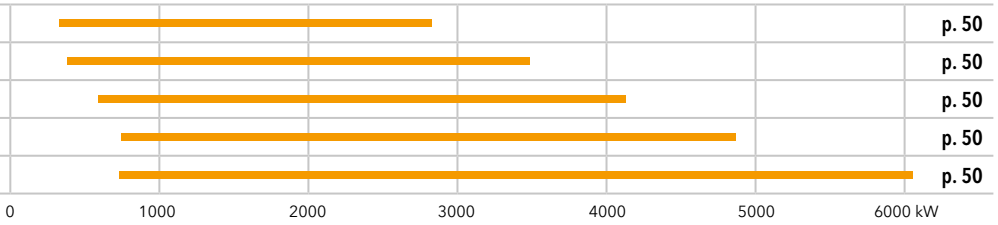

TWO STAGE PROGRESSIVE/MODULATING ELECTRONIC / Low NOx

EK-TRON 5.170 GL-EX2	320 ... 1800 kW	p. 54
EK-TRON 5.200 GL-EX2	340 ... 2160 kW	p. 54
EK-TRON 6.350 GL-EX2	610 ... 3200 kW	p. 58
EK-TRON 6.400 GL-EX2	600 ... 3900 kW	p. 58

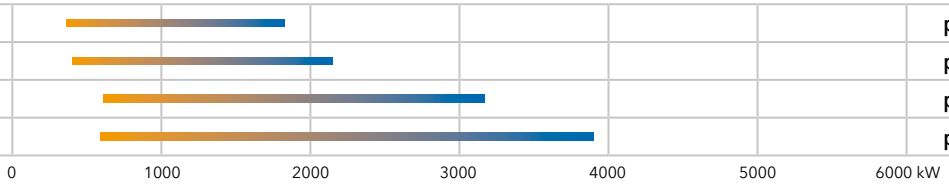

EK-TRON RANGE | OPTIONS

BURNER VARIANTS p. 62
BURNER KITS p. 63

TWO STAGE PROGRESSIVE/MODULATING ELECTRONIC / ULTRA Low NOx (FX burner head)

EK EVO 7.4000 G-EFX	440 ... 4040 kW	p. 68
EK EVO 8.6600 G-EFX	730 ... 6610 kW	p. 68
EK EVO 9.7200 G-EFX	890 ... 7200 kW	p. 72
EK EVO 9.9400 G-EFX	980 ... 9440 kW	p. 72
EK EVO 9.11300 G-EFX	1250 ... 11350 kW	p. 72

0 2000 4000 6000 8000 10000 12000 kW

TWO STAGE PROGRESSIVE/MODULATING ELECTRONIC / Low NOx (F3/U3 burner head)

EK EVO 6.2400 G-EF3	340 ... 2500 kW	p. 76
EK EVO 6.2900 G-EF3	340 ... 2900 kW	p. 76
EK EVO 7.3600 G-EF3	470 ... 3980 kW	p. 80
EK EVO 7.4500 G-EF3	510 ... 4290 kW	p. 80
EK EVO 7.5800 G-EF3	620 ... 5500 kW	p. 80
EK EVO 7.7000 G-EU3	610 ... 7450 kW	p. 84
EK EVO 8.5800 G-EU3	600 ... 6070 kW	p. 88
EK EVO 8.7100 G-EU3	700 ... 7700 kW	p. 88
EK EVO 9.8700 G-EU3	850 ... 8530 kW	p. 88
EK EVO 9.10400 G-EU3	910 ... 10500 kW	p. 88
EK EVO 9.13000 G-EU3	1350 ... 13500 kW	p. 92

0 3000 6000 9000 12000 15000 kW

TWO STAGE PROGRESSIVE/MODULATING ELECTRONIC / Low NOx (U2/U2N burner head)

EK EVO 6.2200 G-EU2N	360 ... 2380 kW	p. 96
EK EVO 6.2400 G-EU2	360 ... 2530 kW	p. 100
EK EVO 6.2900 G-EU2	365 ... 3050 kW	p. 100
EK EVO 7.3400 G-EU2N	530 ... 3720 kW	p. 96
EK EVO 7.3600 G-EU2	490 ... 4290 kW	p. 104
EK EVO 7.4500 G-EU2	510 ... 4290 kW	p. 104
EK EVO 7.5800 G-EU2	630 ... 5850 kW	p. 104
EK EVO 9.7200 G-EU2N	1070 ... 8020 kW	p. 108
EK EVO 9.7500 G-EU2N	1050 ... 8300 kW	p. 108
EK EVO 9.13000 G-EU2	1700 ... 13000 kW	p. 112

0 3000 6000 9000 12000 15000 kW

TWO STAGE PROGRESSIVE/MODULATING ELECTRONIC

EK EVO 6.2400 G-E	390 ... 2650 kW	p. 116
EK EVO 6.2900 G-E	400 ... 3200 kW	p. 116
EK EVO 7.3600 G-E	580 ... 4300 kW	p. 116
EK EVO 7.4500 G-E	680 ... 5400 kW	p. 116
EK EVO 8.5800 G-E	620 ... 6570 kW	p. 120
EK EVO 8.7100 G-E	610 ... 8150 kW	p. 120
EK EVO 9.8700 G-E	780 ... 9700 kW	p. 120
EK EVO 9.10400 G-E	850 ... 11230 kW	p. 120

0 2000 4000 6000 8000 10000 12000 kW

TWO STAGE PROGRESSIVE/MODULATING ELECTRONIC IN GAS AND IN LIGHT OIL / Low NOx

EK EVO 6.2400 GL-EF3	280 ... 1920 kW	p. 124
EK EVO 6.2900 GL-EF3	340 ... 2890 kW	p. 124
EK EVO 7.3600 GL-EF3	470 ... 3980 kW	p. 124
EK EVO 7.4500 GL-EF3	510 ... 4500 kW	p. 124
EK EVO 8.5700 GL-EF3	830 ... 6450 kW	p. 128
EK EVO 9.6500 GL-EF3	860 ... 6950 kW	p. 128
EK EVO 9.8700 GL-EUF	1040 ... 8500 kW	p. 132
EK EVO 9.10400 GL-EUF	1160 ... 9570 kW	p. 132

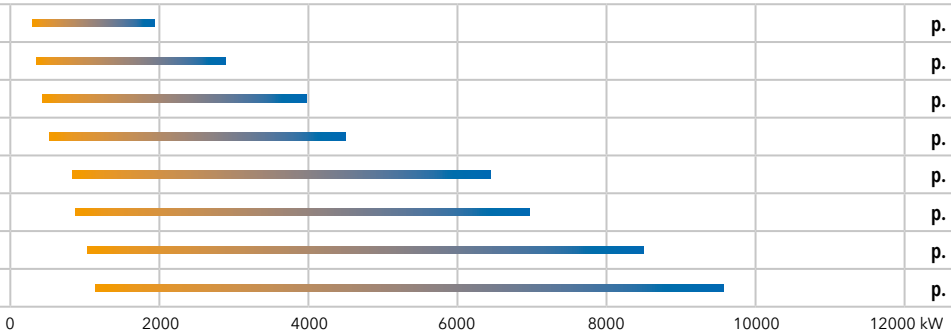

TWO STAGE PROGRESSIVE/MODULATING ELECTRONIC IN GAS / THREE STAGES IN LIGHT OIL

EK EVO 6.2400 GL-EZ3	290 ... 2550 kW	p. 136
EK EVO 6.2900 GL-EZ3	290 ... 3050 kW	p. 136
EK EVO 7.3600 GL-EZ3	300 ... 3600 kW	p. 136
EK EVO 7.4500 GL-EZ3	510 ... 4740 kW	p. 136

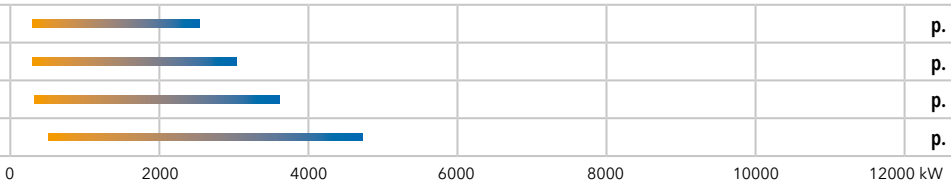

TWO STAGE PROGRESSIVE/MODULATING ELECTRONIC IN GAS AND IN LIGHT OIL

EK EVO 6.2400 GL-E	250 ... 2230 kW	p. 140
EK EVO 6.2900 GL-E	320 ... 2970 kW	p. 140
EK EVO 7.3600 GL-E	490 ... 3650 kW	p. 140
EK EVO 7.4500 GL-E	510 ... 4740 kW	p. 140
EK EVO 8.5800 GL-E	790 ... 6000 kW	p. 144
EK EVO 8.7100 GL-E	790 ... 7700 kW	p. 144
EK EVO 9.8700 GL-E	880 ... 8530 kW	p. 144
EK EVO 9.10400 GL-E	910 ... 10620 kW	p. 144

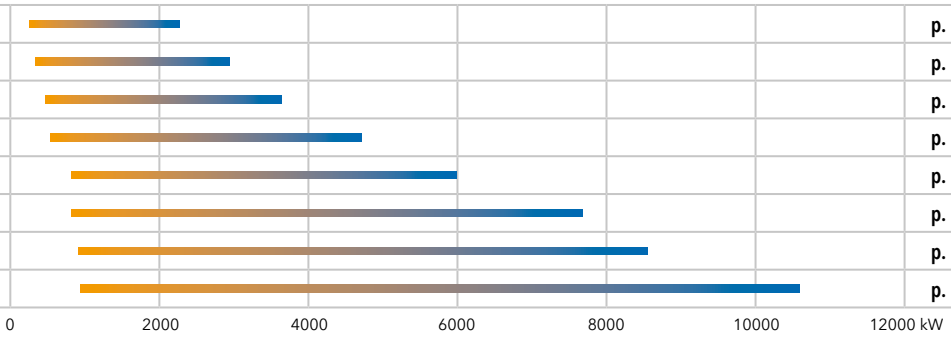

TWO STAGE PROGRESSIVE/MODULATING ELECTRONIC / Low NOx

EK EVO 6.2400 L-EF3	360 ... 1850 kW	p. 148
EK EVO 6.2900 L-EF3	480 ... 2950 kW	p. 148
EK EVO 7.3600 L-EF3	680 ... 4070 kW	p. 148
EK EVO 7.4500 L-EF3	740 ... 4820 kW	p. 148
EK EVO 8.5700 L-EF3	1100 ... 6450 kW	p. 150
EK EVO 9.6500 L-EF3	1200 ... 6600 kW	p. 150
EK EVO 9.8700 L-EUF	1800 ... 8500 kW	p. 152
EK EVO 9.10400 L-EUF	2550 ... 9570 kW	p. 152

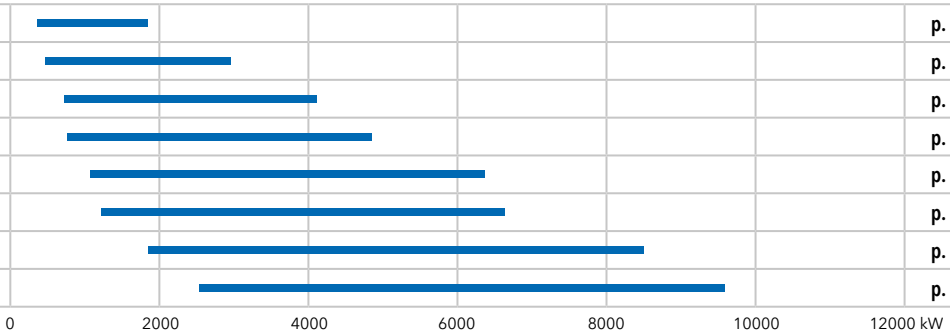

TWO STAGE PROGRESSIVE/MODULATING ELECTRONIC

EK EVO 6.2400 L-E	510 ... 2030 kW	p. 154
EK EVO 6.2900 L-E	650 ... 3100 kW	p. 154
EK EVO 7.3600 L-E	900 ... 3850 kW	p. 154
EK EVO 7.4500 L-E	1300 ... 4900 kW	p. 154
EK EVO 8.5800 L-E	1210 ... 6100 kW	p. 156
EK EVO 8.7100 L-E	1450 ... 7700 kW	p. 156
EK EVO 9.8700 L-E	2400 ... 8530 kW	p. 156
EK EVO 9.10400 L-E	2820 ... 10620 kW	p. 156

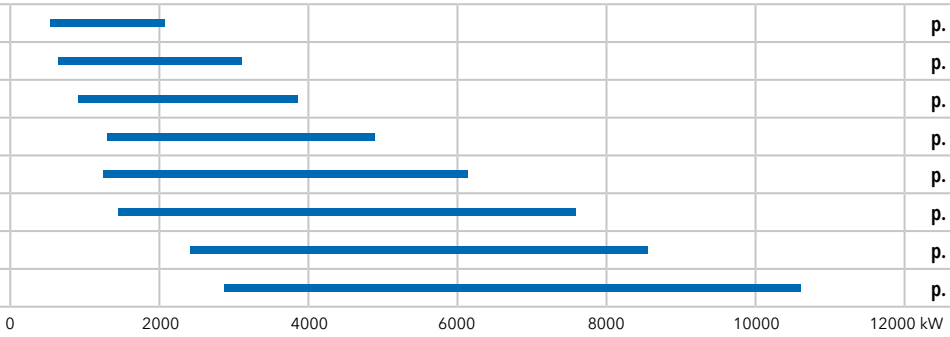

EK EVO RANGE | OPTIONS

BURNER VARIANTS p. 158
BURNER KITS p. 160
SPECIAL CONFIGURATIONS p. 163

TWO STAGE PROGRESSIVE/MODULATING ELECTRONIC / ULTRA Low NOx (FX burner head)

N7.4000 G-EFX	440 ... 4040 kW	p. 166
N8.6600 G-EFX	730 ... 6610 kW	p. 166
N9.7200 G-EFX	890 ... 7200 kW	p. 170
N9.9400 G-EFX	980 ... 9440 kW	p. 170

0 2000 4000 6000 8000 10000 12000 kW

TWO STAGE PROGRESSIVE/MODULATING ELECTRONIC / Low NOx (F3/U3 burner head)

N6.2400 G-EF3	340 ... 2300 kW	p. 174
N6.2900 G-EF3	360 ... 2850 kW	p. 174
N7.3600 G-EF3	500 ... 3900 kW	p. 174
N7.4500 G-EF3	600 ... 4200 kW	p. 174
N8.5800 G-EU3	640 ... 5800 kW	p. 178
N8.7100 G-EU3	700 ... 7100 kW	p. 178
N9.8700 G-EU3	850 ... 8530 kW	p. 178
N9.10400 G-EU3	900 ... 10200 kW	p. 178

0 2000 4000 6000 8000 10000 12000 kW

TWO STAGE PROGRESSIVE/MODULATING ELECTRONIC / Low NOx (U2/U2N burner head)

N6.2200 G-EU2N	350 ... 2300 kW	p. 182
N6.2400 G-EU2	340 ... 2500 kW	p. 186
N6.2900 G-EU2	340 ... 2900 kW	p. 186
N7.3400 G-EU2N	490 ... 3700 kW	p. 182
N7.3600 G-EU2	490 ... 4290 kW	p. 186
N7.4500 G-EU2	510 ... 4290 kW	p. 186
N9.7200 G-EU2N	970 ... 7840 kW	p. 190
N9.7500 G-EU2N	1020 ... 8250 kW	p. 190

0 2000 4000 6000 8000 10000 12000 kW

TWO STAGE PROGRESSIVE/MODULATING ELECTRONIC

N6.2400 G-E	390 ... 2500 kW	p. 194
N6.2900 G-E	400 ... 3000 kW	p. 194
N7.3600 G-E	580 ... 4100 kW	p. 194
N7.4500 G-E	680 ... 5000 kW	p. 194
N8.5800 G-E	740 ... 6570 kW	p. 198
N8.7100 G-E	800 ... 7800 kW	p. 198
N9.8700 G-E	880 ... 9200 kW	p. 198
N9.10400 G-E	960 ... 11200 kW	p. 198

0 2000 4000 6000 8000 10000 12000 kW

TWO STAGE PROGRESSIVE/MODULATING ELECTRONIC IN GAS AND IN LIGHT OIL / Low NOx

N6.2400 GL-EF3	280 ... 1920 kW	**p. 202**
N6.2900 GL-EF3	340 ... 2890 kW	**p. 202**
N7.3600 GL-EF3	470 ... 3980 kW	**p. 202**
N7.4500 GL-EF3	510 ... 4500 kW	**p. 202**
N8.5700 GL-EF3	830 ... 6450 kW	**p. 206**
N9.6500 GL-EF3	830 ... 6950 kW	**p. 206**
N9.8700 GL-EUF	1040 ... 8500 kW	**p. 206**
N9.10400 GL-EUF	1160 ... 9570 kW	**p. 206**

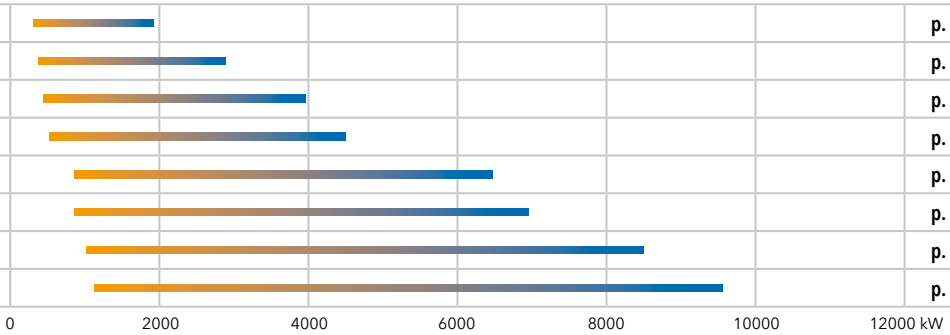

TWO STAGE PROGRESSIVE/MODULATING ELECTRONIC IN GAS AND IN LIGHT OIL

N6.2400 GL-E	250 ... 2230 kW	**p. 210**
N6.2900 GL-E	320 ... 2970 kW	**p. 210**
N7.3600 GL-E	490 ... 3650 kW	**p. 210**
N7.4500 GL-E	510 ... 4750 kW	**p. 210**
N8.5800 GL-E	800 ... 5350 kW	**p. 214**
N8.7100 GL-E	820 ... 7340 kW	**p. 214**
N9.8700 GL-E	880 ... 8530 kW	**p. 214**
N9.10400 GL-E	910 ... 10620 kW	**p. 214**

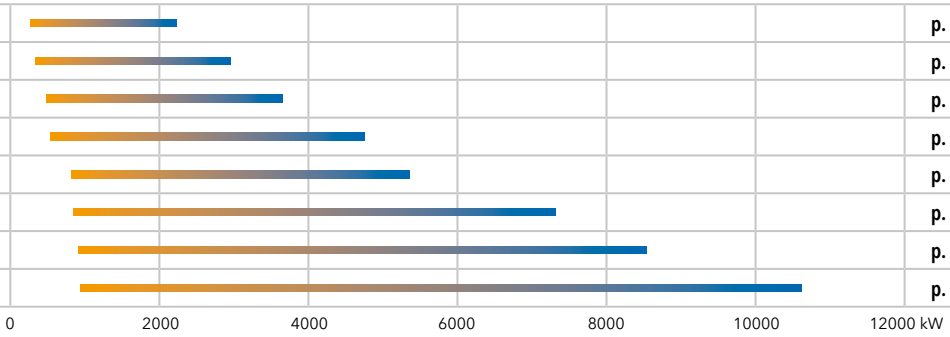

TWO STAGE PROGRESSIVE/MODULATING ELECTRONIC / Low NOx

N6.2400 L-EF3	360 ... 1850 kW	**p. 218**
N6.2900 L-EF3	480 ... 2950 kW	**p. 218**
N7.3600 L-EF3	680 ... 4070 kW	**p. 218**
N7.4500 L-EF3	740 ... 4820 kW	**p. 218**
N8.5700 L-EF3	1100 ... 6450 kW	**p. 220**
N9.6500 L-EF3	1200 ... 6600 kW	**p. 220**
N9.8700 L-EUF	1800 ... 8500 kW	**p. 220**
N9.10400 L-EUF	2550 ... 9570 kW	**p. 220**

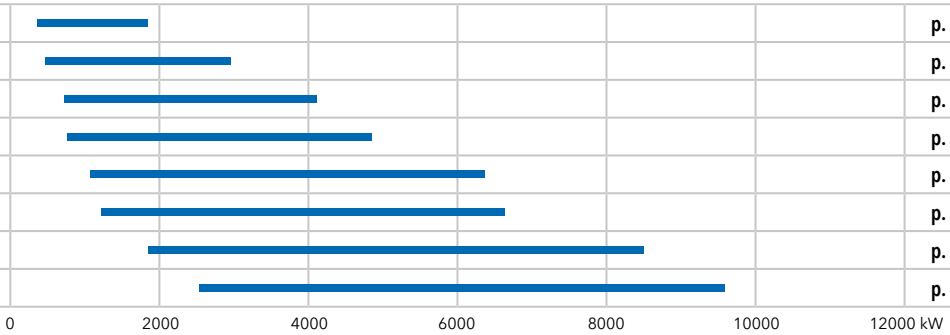

TWO STAGE PROGRESSIVE/MODULATING ELECTRONIC

N6.2400 L-E	510 ... 2030 kW	**p. 222**
N6.2900 L-E	650 ... 3100 kW	**p. 222**
N7.3600 L-E	900 ... 3850 kW	**p. 222**
N7.4500 L-E	1300 ... 4900 kW	**p. 222**
N8.5800 L-E	1350 ... 5350 kW	**p. 224**
N8.7100 L-E	1470 ... 7340 kW	**p. 224**
N9.8700 L-E	2400 ... 8530 kW	**p. 224**
N9.10400 L-E	2820 ... 10620 kW	**p. 224**

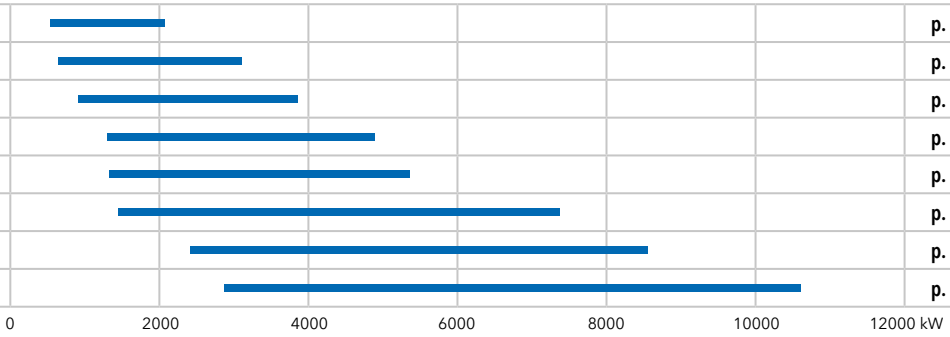

NEXTRON RANGE | OPTIONS

BURNER VARIANTS p. 226

BURNER KITS p. 229

SPECIAL CONFIGURATIONS p. 231

N RANGE GAS

TWO STAGE PROGRESSIVE/MODULATING ELECTRONIC / ULTRA Low NOx (FX burner head)

N10.12000 G-EFX	1300 ... 12400 kW	p. 234
N10.14000 G-EFX	1700 ... 14300 kW	p. 234

0 4000 8000 12000 16000 20000 24000 kW

TWO STAGE PROGRESSIVE/MODULATING ELECTRONIC / Low NOx

N10.12000 G-EU2	1500 ... 12300 kW	p. 238
N10.14000 G-EU2	1750 ... 14800 kW	p. 238
N10.16000 G-EU2	2150 ... 16350 kW	p. 238
N11.19000 G-EU2	2750 ... 19000 kW	p. 242
N11.22000 G-EU2	2750 ... 22000 kW	p. 242

0 4000 8000 12000 16000 20000 24000 kW

TWO STAGE PROGRESSIVE/MODULATING ELECTRONIC

N10.12000 G-E	1300 ... 12000 kW	p. 246
N10.14000 G-E	2000 ... 14000 kW	p. 246
N10.16000 G-E	2000 ... 16000 kW	p. 246

0 4000 8000 12000 16000 20000 24000 kW

N RANGE DUAL FUEL (GAS/LIGHT OIL)

TWO STAGE PROGRESSIVE/MODULATING ELECTRONIC IN GAS AND IN LIGHT OIL / Low NOx

N10.12000 GL-EUF	1500 ... 12000 kW	p. 250
N10.14000 GL-EUF	2100 ... 14000 kW	p. 250
N10.16000 GL-EUF	2100 ... 16000 kW	p. 250

0 3000 6000 9000 12000 15000 18000 kW

TWO STAGE PROGRESSIVE/MODULATING ELECTRONIC IN GAS AND IN LIGHT OIL

N10.12000 GL-E	1300 ... 12000 kW	p. 254

0 3000 6000 9000 12000 15000 18000 kW

N RANGE LIGHT OIL

TWO STAGE PROGRESSIVE/MODULATING ELECTRONIC / Low NOx

N10.12000 L-EUF	3000 ... 12000 kW	p. 258
N10.14000 L-EUF	3150 ... 14000 kW	p. 258
N10.16000 L-EUF	3300 ... 16670 kW	p. 258

0 3000 6000 9000 12000 15000 18000 kW

TWO STAGE PROGRESSIVE/MODULATING ELECTRONIC

N10.12000 L-E	3600 ... 12000 kW	p. 260

0 3000 6000 9000 12000 15000 18000 kW

HO-TRON RANGE | HEAVY OIL

ONE STAGE

HO-TRON 0.135	68 ... 136 kW	p. 264
HO-TRON 0.225	108 ... 227 kW	p. 264
HO-TRON 1.350	170 ... 340 kW	p. 266

0 100 200 300 400 500 kW

TWO STAGES

HO-TRON 1.350 Z	205 ... 410 kW	p. 266
HO-TRON 2.580 Z	205 ... 570 kW	p. 266
HO-TRON 2.930 Z	464 ... 930 kW	p. 268
HO-TRON 2.1400 Z	682 ... 1395 kW	p. 268
HO-TRON 3.1700 Z	682 ... 1700 kW	p. 270
HO-TRON 3.2100 Z	682 ... 2093 kW	p. 270
HO-TRON 4.3000 Z	1000 ... 3000 kW	p. 272
HO-TRON 4.3900 Z3	1300 ... 3900 kW	p. 272

0 1000 2000 3000 4000 5000 kW

TWO STAGE PROGRESSIVE/MODULATING MECHANICAL

HO-TRON 4.3000 R	1000 ... 3000 kW	p. 274
HO-TRON 4.3900 R	1300 ... 3900 kW	p. 274
HO-TRON 5.5000 R	1578 ... 5000 kW	p. 276
HO-TRON 5.5800 R	1795 ... 5800 kW	p. 276
HO-TRON 6.7200 R	2417 ... 7250 kW	p. 278
HO-TRON 6.8500 R	2750 ... 8500 kW	p. 278
HO-TRON 6.10500 R	3300 ... 10500 kW	p. 278
HO-TRON 6.13000 R	4367 ... 12500 kW	p. 278
HO-TRON 7.15000 R	5000 ... 15000 kW	p. 280
HO-TRON 7.17000 R	5700 ... 17000 kW	p. 280

0 3000 6000 9000 12000 15000 18000 kW

GHO-TRON RANGE | DUAL FUEL (GAS/HEAVY OIL)

TWO STAGES

GHO-TRON 3.2100 Z	414 ... 2150 kW	p. 284

0 1000 2000 3000 4000 5000 kW

TWO STAGE PROGRESSIVE/MODULATING MECHANICAL

GHO-TRON 4.3000 R	630 ... 3000 kW	p. 286
GHO-TRON 4.3900 R	875 ... 3900 kW	p. 286
GHO-TRON 5.5000 R	1200 ... 5000 kW	p. 288
GHO-TRON 5.5800 R	1500 ... 5800 kW	p. 288
GHO-TRON 6.7200 R	1500 ... 7500 kW	p. 290
GHO-TRON 6.8500 R	2000 ... 8500 kW	p. 290
GHO-TRON 6.10500 R	2500 ... 10500 kW	p. 290
GHO-TRON 6.13000 R	2700 ... 13000 kW	p. 290
GHO-TRON 7.15000 R	3690 ... 15000 kW	p. 292
GHO-TRON 7.17000 R	4000 ... 17000 kW	p. 292

0 3000 6000 9000 12000 15000 18000 kW

D-TRON RANGE — GAS, LIGHT OIL, HEAVY OIL AND DUAL FUEL

TWO STAGES and TWO STAGE PROGRESSIVE/MODULATING MECHANICAL or ELECTRONIC

p. 296

D...-TRON 2.500	230 ... 500 kW
D...-TRON 2.1000	280 ... 1000 kW
D...-TRON 2.1400	400 ... 1300 kW
D...-TRON 3.1500	300 ... 1600 kW
D...-TRON 3.2100	400 ... 2150 kW
D...-TRON 4.3000	290 ... 3000 kW
D...-TRON 4.3900	550 ... 3950 kW
D...-TRON 5.5800	760 ... 6000 kW
D...-TRON 6.8500	1900 ... 8500 kW
D...-TRON 6.10500	2300 ... 11000 kW
D...-TRON 6.13000	2700 ... 13000 kW
D...-TRON 7.17000	2500 ... 17000 kW
D...-TRON 7.20000	5000 ... 20000 kW
D...-TRON 8.22000	5500 ... 22000 kW
D...-TRON 8.34000	6000 ... 34000 kW
D...-TRON 9.42000	7000 ... 42000 kW

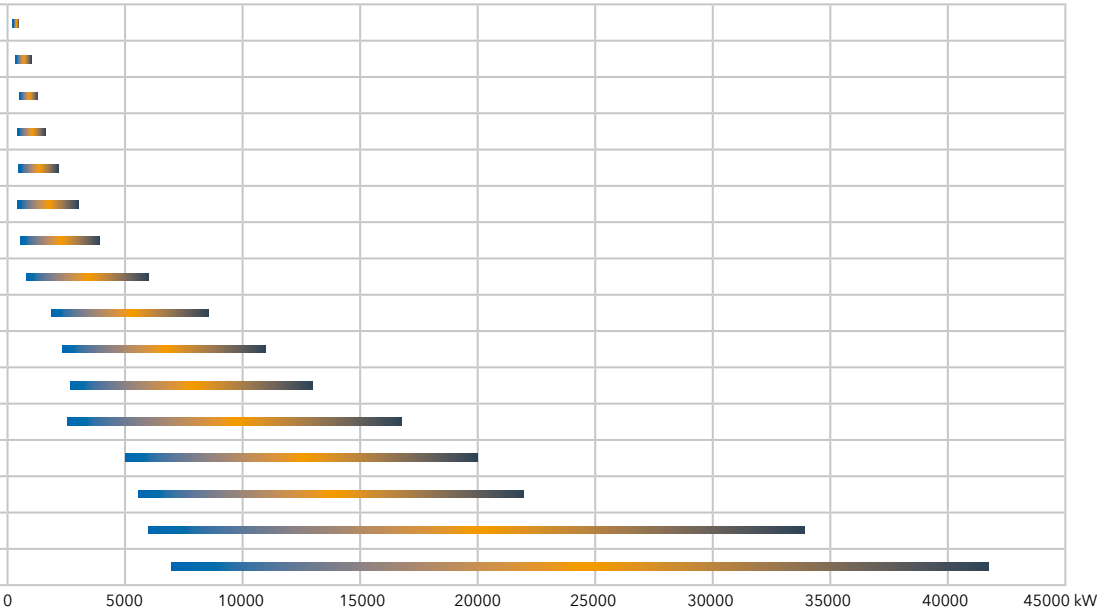

EK-DUO RANGE — GAS, LIGHT OIL AND DUAL FUEL

TWO STAGE PROGRESSIVE/MODULATING ELECTRONIC

p. 298

EK-DUO 2.550	600 ... 6200 kW
EK-DUO 2.700	650 ... 7800 kW
EK-DUO 3.850	900 ... 9500 kW
EK-DUO 3.1000	1000 ... 12000 kW
EK-DUO 4.1300	1750 ... 13000 kW
EK-DUO 4.1600	2000 ... 16000 kW

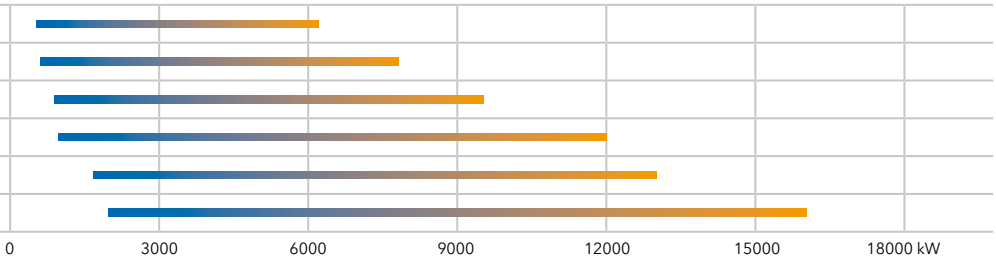

RPD RANGE — GAS, LIGHT OIL, HEAVY OIL AND DUAL FUEL

TWO STAGE PROGRESSIVE/MODULATING MECHANICAL AND ELECTRONIC

p. 300

RPD 20	500 ... 3300 kW
RPD 30	1130 ... 6042 kW
RPD 40	910 ... 8230 kW
RPD 50	1400 ... 11160 kW
RPD 60	2232 ... 14511 kW
RPD 70	3000 ... 20470 kW
RPD 80	5500 ... 30350 kW
RPD 90	7000 ... 42000 kW
RPD 100	7000 ... 45000 kW
RPD 130	10800 ... 65000 kW
RPD 160	12500 ... 80000 kW

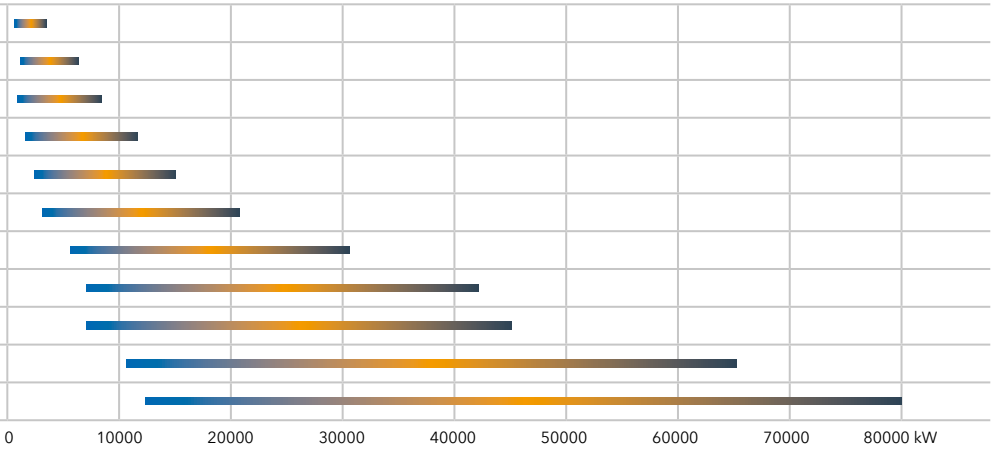

RPD N RANGE — GAS

TWO STAGE PROGRESSIVE/MODULATING ELECTRONIC

p. 302

RPD N 70	3000 ... 21000 kW
RPD N 80	4450 ... 31000 kW
RPD N 90	6140 ... 43000 kW
RPD N 100	7570 ... 53000 kW
RPD N 110	9000 ... 63000 kW
RPD N 130	10300 ... 70000 kW
RPD N 160	12000 ... 80000 kW

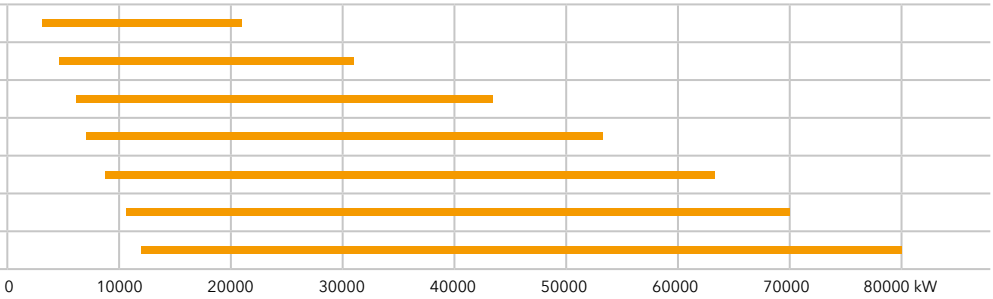

GAS TRAINS

Electronic and mechanical versions for EK-TRON p. 304
Electronic versions for EK EVO and NEXTRON p. 308
Electronic versions for N10/N11 p. 312
Mechanical versions for GHO-TRON p. 314

CONTROL UNITS

BT300 p. 315
ETAMATIC p. 316

O_2/CO TRIM

O_2 TRIM for BT300, Etamatic and Etamatic OEM p. 317
O_2 TRIM with CO measure for BT300, Etamatic and Etamatic OEM p. 318

OPTIONS

Frequency converter p. 320
Acoustic shrouds p. 321
Options for gas burners p. 322
Options for light oil burners p. 328

EK-TRON, EK EVO and NEXTRON range

Burner body

OPERATION TYPE
E = 2 stage progressive/modulating electronic
Z3 = 3 stages (in light oil)

COMBUSTION TYPE
- = Low NOx Class 2
F3, F4, UF = Low NOx, Free Flame technology
U2, U2N, U3 = Low NOx, Diamond Head technology
X2 = Low NOx, Multi-stage technology
FX = Ultra Low NOx, Blue Triple Head technology

EK EVO 6 . 2400 G-EF3 /BT3 /KL /PED

RANGE
EK-TRON 5, 6, 7
EK EVO 6, 7, 8, 9
N6, N7, N8, N9

SIZE
Approximate power (kW)

FUEL
G = Natural gas
GL = Dual fuel
L = Light oil

ELECTRICAL EQUIPMENT
/BT3 = BT300

LENGTH
KN = short
KM = medium
KL = long

ADDITIONAL VARIANTS
FGR = FGR equipped
PED = PED equipped
72H = 72-hour continuous operation
FCE = connection arrangement to an external frequency converter
FCO = on-board frequency converter

Combustion head

OPERATION TYPE
E = 2 stage progressive/modulating electronic
R = 2 stage progressive/modulating mechanical
Z3 = 3 stages (in light oil)

COMBUSTION TYPE
- = Low NOx Class 2
F3, F4, UF = Low NOx, Free Flame technology
U2, U2N, U3 = Low NOx, Diamond Head technology
X2 = Low NOx, Multi-stage technology
FX = Ultra Low NOx, Blue Triple Head technology

G11EF31 - KN

FUEL
G = Gas
GL = Dual fuel
L = Light oil

PLATFORM
11 EK EVO 6/N6
12 EK EVO 7/N7
13 EK EVO 8/N8
14 EK EVO 9/N9

SERIES
1 = N°1
2 = N°2
3 = N°3
... = N°...

LENGTH
KN = short
KM = medium
KL = long

Gas train

OPERATION TYPE
4 = 2 stage progressive electronic
5 = 2 stage progressive mechanical

SERIES
51 = N°1
... = N°...
99 = N°...

d452 - 1"1/2 - Rp 1"1/2

VALVE MANUFACTURER
d = Dungs
s = Siemens

VALVE NOMINAL DIAMETER
1"1/2 ... **2"** or **DN50** ... **DN125**

GAS TRAIN CONNECTION DIAMETER
1"1/2 ... **2"** or **DN50** ... **DN125**

N range

SIZE
Approximate power (kW)

FUEL
G = Natural gas
GL = Dual fuel
L = Light oil

COMBUSTION TYPE
- = Low NOx Class 2
UF = Low NOx, Free Flame technology
U2 = Low NOx, Diamond Head technology
FX = Low NOx, Blue Triple Head technology

N10 . 14000 G-EU2 /ETO /KN /FGR

RANGE
N10/N11

OPERATION TYPE
E = 2 stage progressive/ modulating electronic

ELECTRICAL EQUIPMENT
/ETO = Etamatic OEM

LENGTH
KN = short
KM = medium
KL = long

ADDITIONAL EQUIPMENT
/PED = PED equipped
/FGR = FGR equipped

HO-TRON and GHO-TRON range

RANGE AND FUEL
HO-TRON 0 ... 7 = heavy oil
GHO-TRON 3 ... 7 = dual fuel (gas/heavy oil)

OPERATION TYPE
- = 1 stage
Z = 2 stages
R = 2 stage progressive/modulating mechanical

GHO-TRON 5 . 5800 R KN

SIZE
Approximate power (kW)

HEAD LENGTH
KN = short
KL = long

D...-TRON range

RANGE AND FUEL
DG-TRON: gas
DL-TRON: light oil
DGL-TRON: dual fuel (gas/light oil)
DO-TRON: heavy oil
DGO-TRON: dual fuel (gas/heavy oil)

PLATFORM
2 = up to 1 MW
3 = from 1,5 to 2 MW
4 = from 3 to 4 MW
5 = from 5 to 6 MW
6 = from 7 to 13 MW
7 = from 15 to 20 MW
8 = up to 34 MW
9 = up to 42 MW

OPERATION TYPE
Z = 2 stages
R = 2 stage progressive/modulating mechanical
E = 2 stage progressive/modulating electronic

DG-TRON 3.1500 E LN KN

SIZE
Approximate power (kW)

COMBUSTION TYPE
- = Low NOx class 2
LN = Low NOx class 3

HEAD LENGTH
KN = short
KM = medium
KL = long

EK-DUO, RPD and RPD N range

SIZE
Approximate power (kW) /10

FUEL
G = Natural gas
F = Liquid gas
GL = Dual fuel (gas/light oil)
L = Light oil
S = Heavy oil
GS = Dual fuel (gas/heavy oil)

COMBUSTION TYPE
- = Standard
U1 = Low NOx gas - Diamond Head
U2 = Low NOx gas - Diamond Head
UF = Low NOx light oil - Free Flame
FX = Low NOx, Blue Triple Head technology

EK-DUO 3.1000 G-EU2 KN

RANGE
EK-DUO 2, 3, 4
RPD 20 ... 160
RPD 70 N ... 160 N

OPERATION TYPE
E = 2 stage progressive/modulating electronic

HEAD LENGTH
KN = short
KM = medium
KL = long

EK-TRON

MONOBLOCK BURNERS
FROM 320 TO 6050 kW
GAS AND DUAL FUEL

ROBUST AND RELIABLE DESIGN

The structure of the EK-TRON is the result of a successful synergy between ELCO key features and technologies, developed to meet the needs of any heating application and industrial process.
The essential and simple design of the EK-TRON allows perfect adaptation to any conditions, thanks to the optimal combination of resistant and reliable materials, extreme ease of use and great comfort during daily operation.

CLEAN AND STEADY COMBUSTION

The ELCO combustion technologies are capable to reach the NOx levels required by the most severe standards for all types of boiler furnaces, even the most narrow ones.
The combination of internal and exernal recirculation, studied in our laboratories, allows EK-TRON burners to reach extremely low emissions value (between 25 and 28 NOx mg/kWh at 3% of O_2).

FLEXIBILITY AND VERSATILITY

The EK-TRON are characterized by a high flexibility of installation and operation.
They have been designed to be installed in different ways: up-firing, down-firing, upside-down or side-to-side (twin chamber boilers).
Options and configurations have been foreseen in order to fulfill any application need.

EFFICIENT AND PRACTICAL OPERATIONS

All the models in the series are available with mechanical operation or in a fully electronic configuration.
The electronic versions are equipped with the exclusive ELCO man-machine interface allowing simple and effective programming operations. This results in smooth and performing operation and a quick and simple interaction between the user and the burner.

RANGE OVERVIEW

/ **GAS RANGE**
340 / 6050 kW

/ **DUAL FUEL RANGE**
320 / 3900 kW

/ **ULTRA LOW NOx**
420 / 5800 kW

MAIN TECHNICAL FEATURES

- Two stage progressive/modulating forced draught burner
- Fuels:
  - natural gas, Hi = 6,99 … 11,39 kWh/Nm^3
  - LPG, Hi = 25,89 kWh/Nm^3
  - light oil, viscosity 6 mm^2/s at 20°C, Hi = 11,86 kWh/kg
- Fully electronic modulation system or mechanical configuration available for each model
- Different combustion technologies available to reduce NOx emissions without compromising the performance and capable to satisfy even the most difficult conditions in terms of combustion chamber dimension:
  - Low NOx class 2 (<120 mg/kWh) according to EN676 Directive
  - Low NOx class 3 (<80 mg/kWh) according to EN676 Directive
  - Ultra Low NOx versions with FGR system to reach NOx values well below 30 mg/kWh are available on request
- Simplified switch cabinet to meet the majority of the application requirements
- Redesigned ventilation system for a more compact structure
- Easily adjustable combustion head to adapt to different boiler specifications and emission level requirements
- Flame tube available in different lengths
- Secured burner head adjustments during maintenance (RTC System)
- Closing of the air damper on burner shut-down
- Multiple gas train matching according to the inlet gas pressure
- Gas train factory assembled and tested for tightness and electrical security
- Products are in compliance with EN676 and EN267 European standards and with the following directives:
  - 2014/35/UE Low Voltage Directive
  - 2014/30/UE EMC Directive
  - 2016/426/UE Gas Appliances Regulation
  - 2006/42/EC Machinery Directive
  - 2011/65/EU RoHS2 Directive

PRODUCT LIST

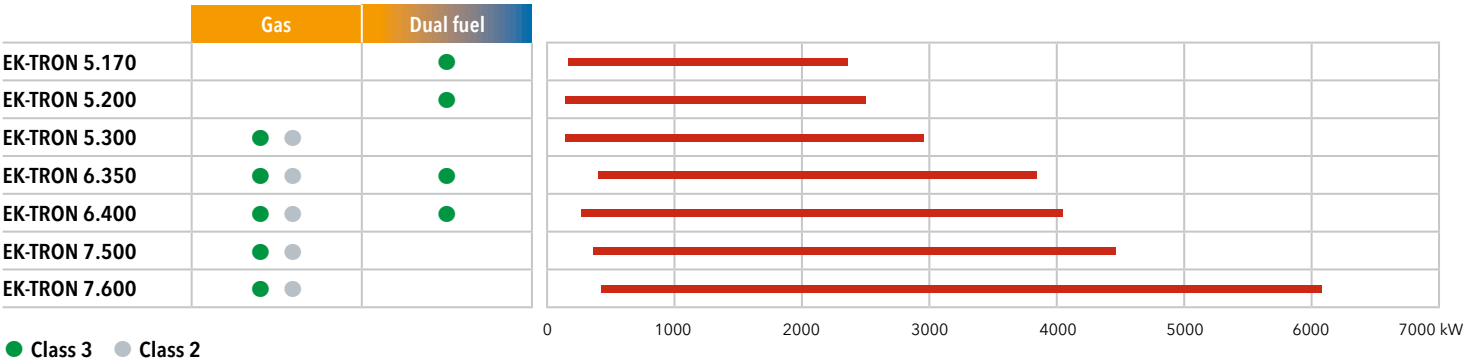

EMISSIONS

EK-TRON burners are equipped with combustion technologies that allow these models not only to meet the NOx limit imposed by the EN676 Standard, but also to work well below the requirements, ensuring extremely low emissions:

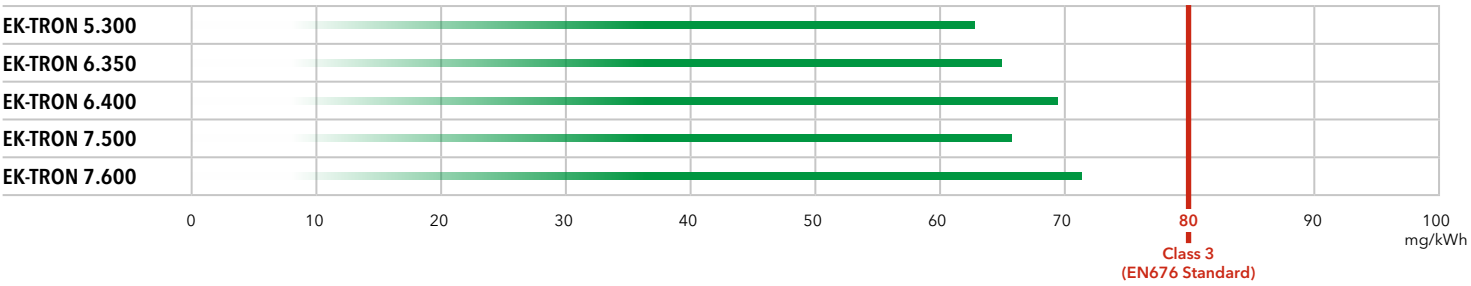

EK-TRON

GAS

Low NOx Class 3

EK-TRON 5 G-EF3 / EK-TRON 6 G-EF3 / EK-TRON 7 G-EF3

400 … 5800 kW
Two stage progressive/modulating electronic

- **Fuel:** natural gas, Hi = 6,99 … 11,39 kWh/Nm³
- **Emissions:** Low NOx class 3 burners (≤80 mg/kWh) according to EN676 Directive equipped with Low NOx Free Flame combustion head
- **Addtional configuration:** models with FGR System (≤30 mg/kWh) available on request
- **Protection level:** IP 40

TECHNICAL DATA

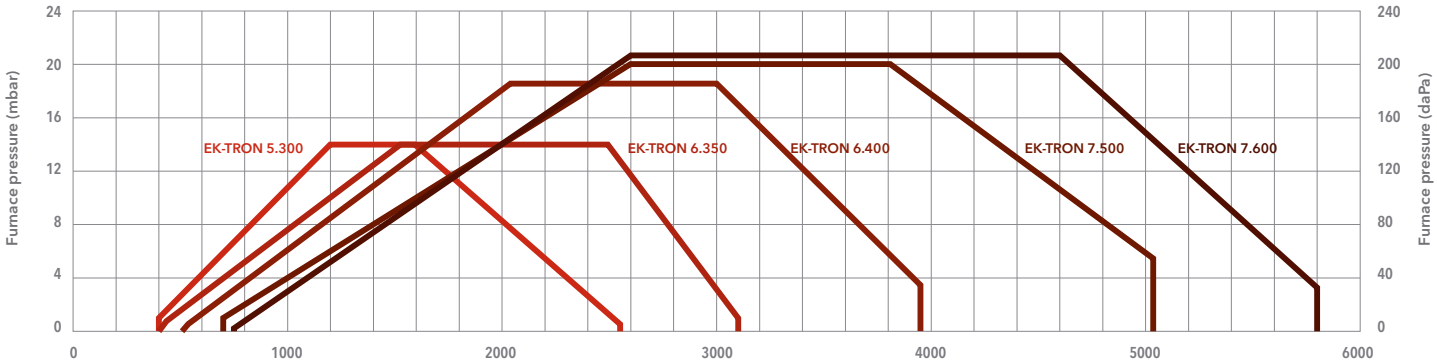

Test conditions conforming to EN676 - Temperature: 20°C - Pressure: 1013,5 mbar - Altitude: 0 m a.s.l.

		EK-TRON 5.300 G-EF3	EK-TRON 6.350 G-EF3	EK-TRON 6.400 G-EF3	EK-TRON 7.500 G-EF3	EK-TRON 7.600 G-EF3
Operating range		400 – 2550 kW	400 – 3100 kW	510 – 3950 kW	700 – 5030 kW	750 – 5800 kW
Gas connection		DN50	DN50	DN65	DN65	DN65
Control box / flame detector		BT320 / QRA2*	BT320 / QRA2*	BT320 / QRA2*	BT320 / QRA2*	BT320 / QRA2*
Auxiliary voltage		1NPE AC 230 V - 50 Hz TN-S	1NPE AC 230 V - 50 Hz TN-S	1NPE AC 230 V - 50 Hz TN-S	1NPE AC 230 V - 50 Hz TN-S	1NPE AC 230 V - 50 Hz TN-S
Power supply		3NPE AC 400 V - 50 Hz	3NPE AC 400 V - 50 Hz	3NPE AC 400 V - 50 Hz	3NPE AC 400 V - 50 Hz	3NPE AC 400 V - 50 Hz
Fan motor		4 kW	5,5 kW	7,5 kW	11 kW	15 kW
Acoustic level		<83 dB(A)	<84 dB(A)	<85 dB(A)	<85 dB(A)	<85 dB(A)
Burner codes (body + head)	KM	**3148195**	**3148425**	**3148197**	**3148199**	**3148201**
	KL	**3148196**	**3148426**	**3148198**	**3148200**	**3148202**

*: BT330 / FFS08 for 72H versions

OTHER AVAILABLE VERSIONS

Variant		EK-TRON 5.300 G-EF3	EK-TRON 6.350 G-EF3	EK-TRON 6.400 G-EF3	EK-TRON 7.500 G-EF3	EK-TRON 7.600 G-EF3
72H	KM	**3148450**	**3148452**	**3148454**	**3148456**	**3148458**
	KL	**3148451**	**3148453**	**3148455**	**3148457**	**3148459**
FCE	KM	**3148474**	**3148476**	**3148478**	**3148480**	**3148482**
	KL	**3148475**	**3148477**	**3148479**	**3148481**	**3148483**
72H + FCE	KM	**3148486**	**3148488**	**3148490**	**3148492**	**3148494**
	KL	**3148487**	**3148489**	**3148491**	**3148493**	**3148495**
FCO	KM	**3148920**	**3148922**	**3148924**	**3148926**	**3148928**
	KL	**3148921**	**3148923**	**3148925**	**3148927**	**3148929**
72H + FCO	KM	**3148930**	**3148932**	**3148934**	**3148936**	**3148938**
	KL	**3148931**	**3148933**	**3148935**	**3148937**	**3148939**

GAS TRAINS AND FILTERS

DUNGS models	Code
GT-D1-MBEVB-RP50-PS2	3148693
GT-D1-MBEVB-DN65-PS2	3148694
GT-D1-MBEVB-DN80-PS2	3148695
GT-D1-MBEVB-DN100-PS2	3148696

SIEMENS models	Code
GT-S1-VGD20-RP50-PS2	3148683
GT-S1-VGD40-DN65-PS2	3148684
GT-S1-VGD40-DN80-PS2	3148685
GT-S1-VGD40-DN100-PS2	3148686
GT-S1-VGD40-DN125-PS2	3148687

Filters	Code
FG-Rp2"	3757200
FG-DN65	3757198
FG-DN80	3757201
FG-DN100	3757195
FG-DN125	3757209

DIMENSIONS (mm)

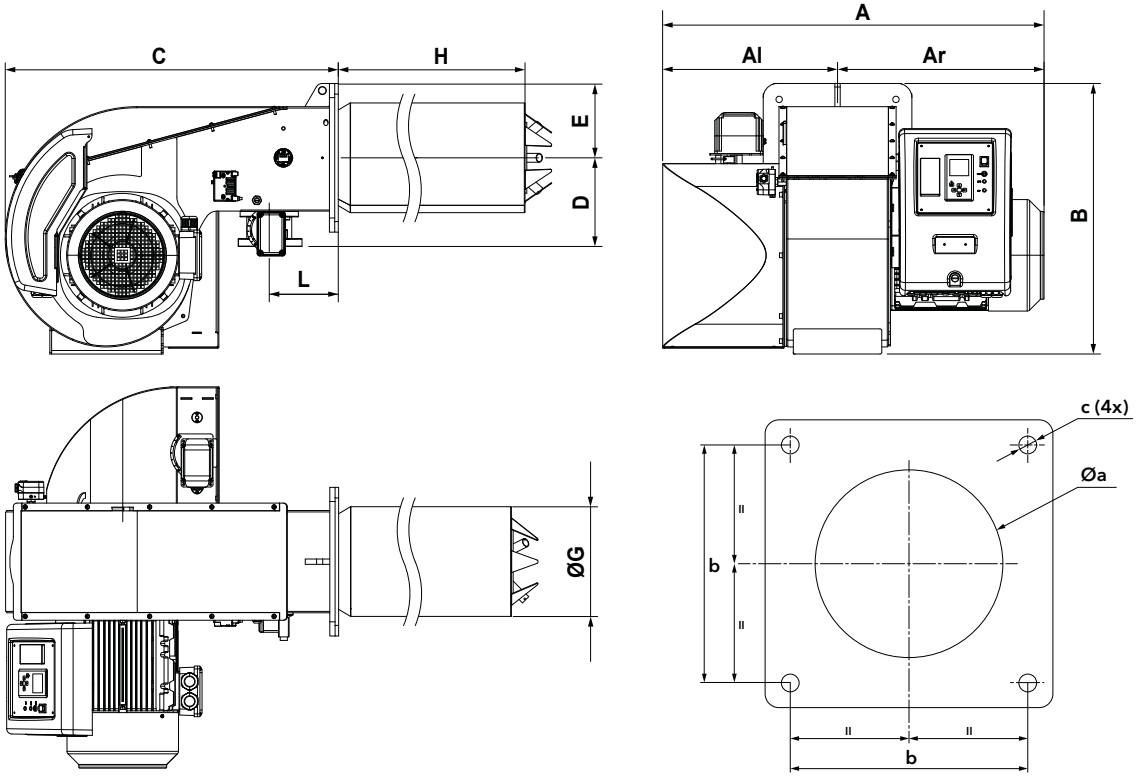

Model	A	Al	Ar	B	C	D	E	ØG	H		L	Øa	b	c
									KM	KL				
EK-TRON 5.300 G-EF3	813	356	457	606	724	245	190	263	540	640	125	278-288	315	M16
EK-TRON 6.350 G-EF3	875	387	488	684	828	250	190	263	550	650	195	278-288	315	M16
EK-TRON 6.400 G-EF3	875	387	488	684	828	250	190	310	548	638	195	325-335	315	M16
EK-TRON 7.500 G-EF3	1083	494	589	780	943	250	210	310	558	688	195	325-335	330	M16
EK-TRON 7.600 G-EF3	1083	494	589	780	943	250	210	323	558	688	195	338-348	330	M16

Note: dimensions may vary depending on the configuration chosen

PACKAGING

The burner is delivered on a pallet with:
- burner body and combustion head (to be mounted by the installer)
- gas train and filter
- boiler fixing accessories
- technical documentation

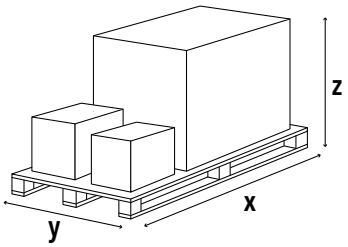

Model	Dimensions (mm)		
	X	Y	Z
EK-TRON 5.300 G-EF3	1100	900	720
EK-TRON 6.350 G-EF3	1100	900	720
EK-TRON 6.400 G-EF3	1100	900	720
EK-TRON 7.500 G-EF3	1300	1050	900
EK-TRON 7.600 G-EF3	1300	1050	900

EK-TRON 5 G-EF3 / EK-TRON 6 G-EF3 / EK-TRON 7 G-EF3

400 ... 5800 kW
Two stage progressive/modulating electronic

PRESSURE LOSS [BURNER HEAD + GAS TRAIN] (mbar)

EK-TRON 5.300 G-EF3

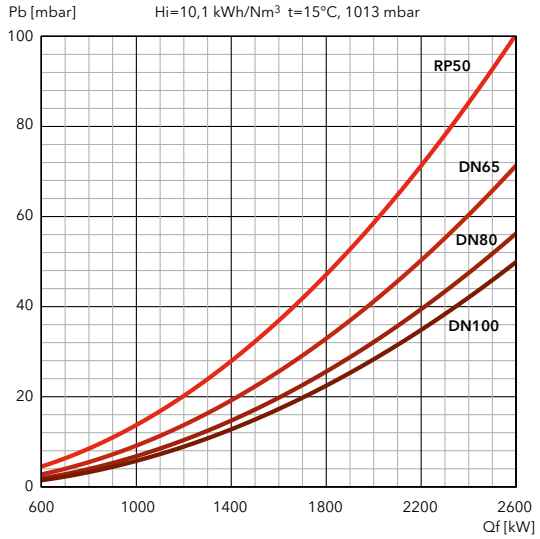

Each gas train must be installed with its own **connection pipe**, to be selected from the following table:

Gas train model	Code	Connection pipe
GT-S1-VGD20-RP50-PS2	3148683	3144686
GT-S1-VGD40-DN65-PS2	3148684	3148771
GT-S1-VGD40-DN80-PS2	3148685	3148772
GT-S1-VGD40-DN100-PS2	3148686	3148773
GT-D1-MBEVB-RP50-PS2	3148693	3144686
GT-D1-MBEVB-DN65-PS2	3148694	3148771
GT-D1-MBEVB-DN80-PS2	3148695	3148772
GT-D1-MBEVB-DN100-PS2	3148696	3148773

Dimensions of gas trains and connection pipes: see page 304

EK-TRON 6.350 G-EF3

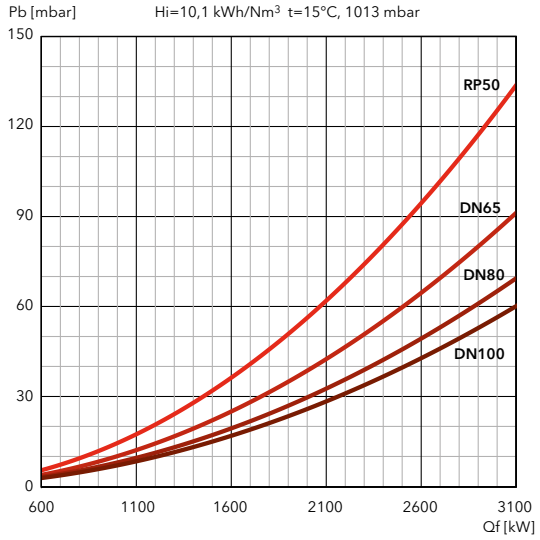

Each gas train must be installed with its own **connection pipe**, to be selected from the following table:

Gas train model	Code	Connection pipe
GT-S1-VGD20-RP50-PS2	3148683	3144686
GT-S1-VGD40-DN65-PS2	3148684	3148771
GT-S1-VGD40-DN80-PS2	3148685	3148772
GT-S1-VGD40-DN100-PS2	3148686	3148773
GT-D1-MBEVB-RP50-PS2	3148693	3144686
GT-D1-MBEVB-DN65-PS2	3148694	3148771
GT-D1-MBEVB-DN80-PS2	3148695	3148772
GT-D1-MBEVB-DN100-PS2	3148696	3148773

Dimensions of gas trains and connection pipes: see page 304

EK-TRON 6.400 G-EF3

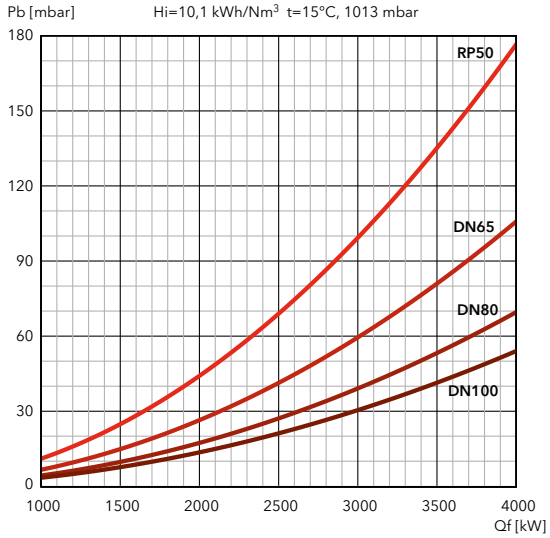

Each gas train must be installed with its own **connection pipe**, to be selected from the following table:

Gas train model	Code	Connection pipe
GT-S1-VGD20-RP50-PS2	3148683	3148770
GT-S1-VGD40-DN65-PS2	3148684	3145997
GT-S1-VGD40-DN80-PS2	3148685	3145864
GT-S1-VGD40-DN100-PS2	3148686	3145821
GT-D1-MBEVB-RP50-PS2	3148693	3148770
GT-D1-MBEVB-DN65-PS2	3148694	3145997
GT-D1-MBEVB-DN80-PS2	3148695	3145864
GT-D1-MBEVB-DN100-PS2	3148696	3145821

Dimensions of gas trains and connection pipes: see page 304

PRESSURE LOSS [BURNER HEAD + GAS TRAIN] (mbar)

EK-TRON 7.500 G-EF3

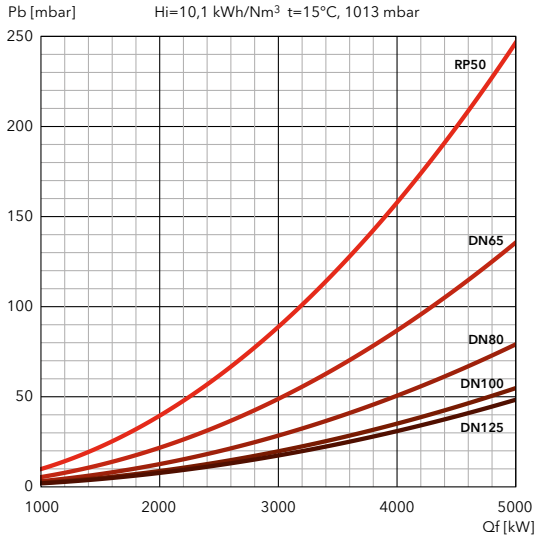

Each gas train must be installed with its own **connection pipe**, to be selected from the following table:

Gas train model	Code	Connection pipe
GT-S1-VGD20-RP50-PS2	3148683	3148770
GT-S1-VGD40-DN65-PS2	3148684	3148766
GT-S1-VGD40-DN80-PS2	3148685	3148767
GT-S1-VGD40-DN100-PS2	3148686	3148768
GT-S1-VGD40-DN125-PS2	3148687	3148769
GT-D1-MBEVB-RP50-PS2	3148693	3148770
GT-D1-MBEVB-DN65-PS2	3148694	3148766
GT-D1-MBEVB-DN80-PS2	3148695	3148767
GT-D1-MBEVB-DN100-PS2	3148696	3148768

Dimensions of gas trains and connection pipes: see page 304

EK-TRON 7.600 G-EF3

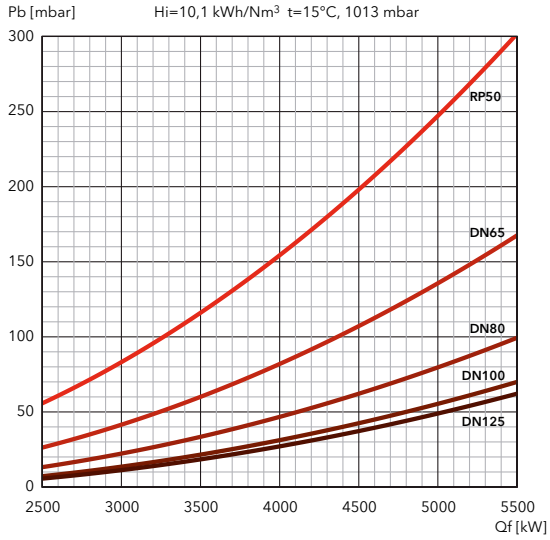

Each gas train must be installed with its own **connection pipe**, to be selected from the following table:

Gas train model	Code	Connection pipe
GT-S1-VGD20-RP50-PS2	3148683	3148770
GT-S1-VGD40-DN65-PS2	3148684	3148766
GT-S1-VGD40-DN80-PS2	3148685	3148767
GT-S1-VGD40-DN100-PS2	3148686	3148768
GT-S1-VGD40-DN125-PS2	3148687	3148769
GT-D1-MBEVB-RP50-PS2	3148693	3148770
GT-D1-MBEVB-DN65-PS2	3148694	3148766
GT-D1-MBEVB-DN80-PS2	3148695	3148767
GT-D1-MBEVB-DN100-PS2	3148696	3148768

Dimensions of gas trains and connection pipes: see page 304

FILTERS

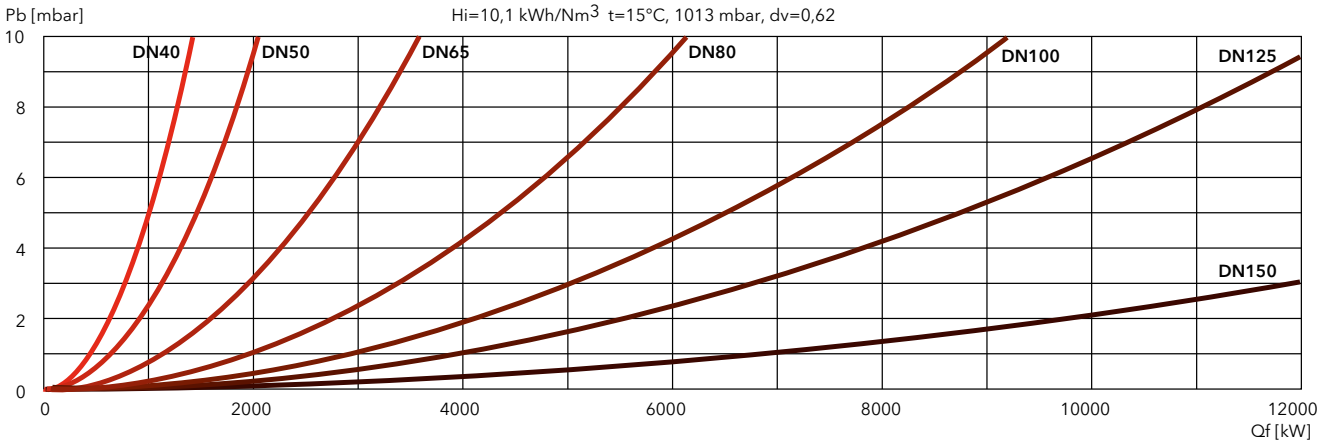

EK-TRON

GAS

Low NOx Class 3

EK-TRON 5 G-RF3 / EK-TRON 6 G-RF3 / EK-TRON 7 G-RF3

400 … 5800 kW
Two stage progressive/modulating mechanical

- **Fuel:** natural gas, Hi = 6,99 … 11,39 kWh/Nm³
- **Emissions:** Low NOx class 3 burners (≤80 mg/kWh) according to EN676 Directive equipped with Low NOx Free Flame combustion head
- **Protection level:** IP 40

TECHNICAL DATA

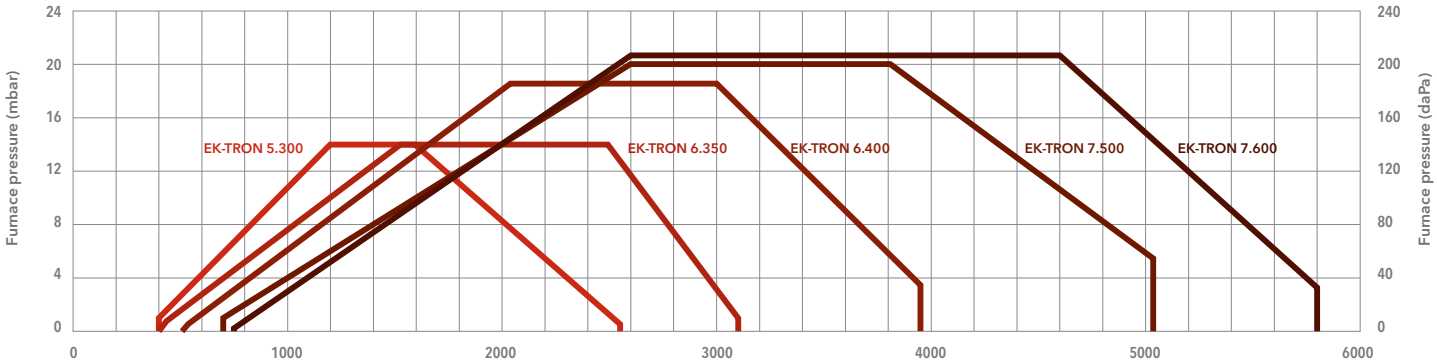

Test conditions conforming to EN676 - Temperature: 20°C - Pressure: 1013,5 mbar - Altitude: 0 m a.s.l.

		EK-TRON 5.300 G-RF3	EK-TRON 6.350 G-RF3	EK-TRON 6.400 G-RF3	EK-TRON 7.500 G-RF3	EK-TRON 7.600 G-RF3
Operating range		400 – 2550 kW	400 – 3100 kW	510 – 3950 kW	700 – 5030 kW	750 – 5800 kW
Gas connection		DN50	DN50	DN65	DN65	DN65
Control box / flame detector		LME73 / QRA2*	LME73 / QRA2*	LME73 / QRA2*	LME73 / QRA2*	LME73 / QRA2*
Auxiliary voltage		1NPE AC 230 V - 50 Hz TN-S	1NPE AC 230 V - 50 Hz TN-S	1NPE AC 230 V - 50 Hz TN-S	1NPE AC 230 V - 50 Hz TN-S	1NPE AC 230 V - 50 Hz TN-S
Power supply		3NPE AC 400 V - 50 Hz	3NPE AC 400 V - 50 Hz	3NPE AC 400 V - 50 Hz	3NPE AC 400 V - 50 Hz	3NPE AC 400 V - 50 Hz
Fan motor		4 kW	5,5 kW	7,5 kW	11 kW	15 kW
Acoustic level		<83 dB(A)	<84 dB(A)	<85 dB(A)	<85 dB(A)	<85 dB(A)
Burner codes (body + head)	KM	**3148297**	**3148427**	**3148299**	**3148301**	**3148303**
	KL	**3148298**	**3148428**	**3148300**	**3148302**	**3148304**

*: LME75 / QRA73 for 72H versions

OTHER AVAILABLE VERSIONS

Variant		EK-TRON 5.300 G-RF3	EK-TRON 6.350 G-RF3	EK-TRON 6.400 G-RF3	EK-TRON 7.500 G-RF3	EK-TRON 7.600 G-RF3
72H	KM	**3148462**	**3148464**	**3148466**	**3148468**	**3148470**
	KL	**3148463**	**3148465**	**3148467**	**3148469**	**3148471**

GAS TRAINS AND FILTERS

DUNGS models	Code
GT-D1-MBEVB-RP50-PS3	3148697
GT-D1-MBEVB-DN65-PS3	3148698
GT-D1-MBEVB-DN80-PS3	3148699
GT-D1-MBEVB-DN100-PS3	3148700

SIEMENS models	Code
GT-S1-VGD20-RP50-PS3	3148688
GT-S1-VGD40-DN65-PS3	3148689
GT-S1-VGD40-DN80-PS3	3148690
GT-S1-VGD40-DN100-PS3	3148691
GT-S1-VGD40-DN125-PS3	3148692

Filters	Code
FG-Rp2"	3757200
FG-DN65	3757198
FG-DN80	3757201
FG-DN100	3757195
FG-DN125	3757209

DIMENSIONS (mm)

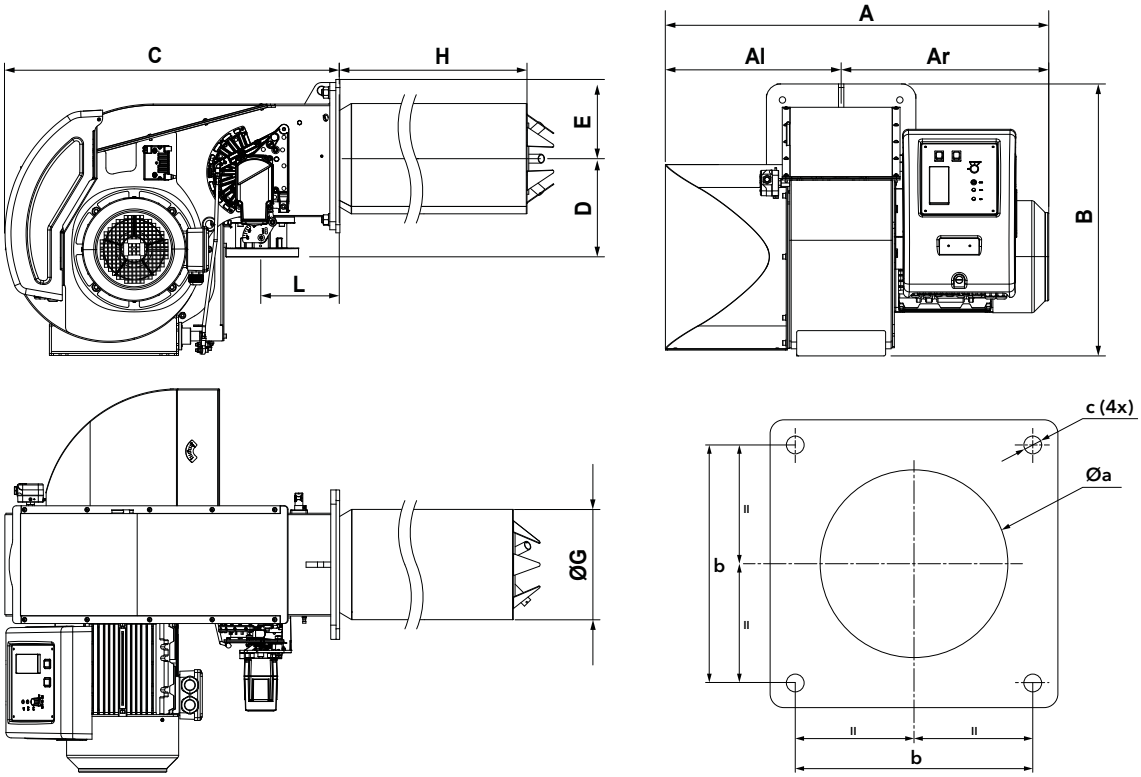

Model	A	Al	Ar	B	C	D	E	ØG	H		L	Øa	b	c
									KM	KL				
EK-TRON 5.300 G-RF3	813	356	457	606	724	245	190	263	540	640	125	278-288	315	M16
EK-TRON 6.350 G-RF3	875	387	488	684	828	250	190	263	550	650	195	278-288	315	M16
EK-TRON 6.400 G-RF3	875	387	488	684	828	250	190	310	548	638	195	325-335	315	M16
EK-TRON 7.500 G-RF3	1083	494	589	780	943	250	210	310	558	688	195	325-335	330	M16
EK-TRON 7.600 G-RF3	1083	494	589	780	943	250	210	323	558	688	195	338-348	330	M16

PACKAGING

The burner is delivered on a pallet with:
- burner body and combustion head (to be mounted by the installer)
- gas train and filter
- boiler fixing accessories
- technical documentation

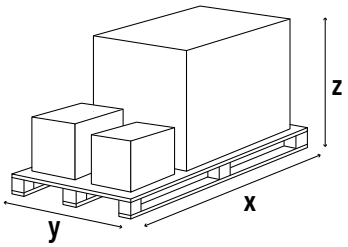

Model	Dimensions (mm)		
	X	Y	Z
EK-TRON 5.300 G-RF3	1100	900	720
EK-TRON 6.350 G-RF3	1100	900	720
EK-TRON 6.400 G-RF3	1100	900	720
EK-TRON 7.500 G-RF3	1300	1050	900
EK-TRON 7.600 G-RF3	1300	1050	900

EK-TRON 5 G-RF3 / EK-TRON 6 G-RF3 / EK-TRON 7 G-RF3

400 ... 5800 kW
Two stage progressive/modulating mechanical

PRESSURE LOSS [BURNER HEAD + GAS TRAIN] (mbar)

EK-TRON 5.300 G-RF3

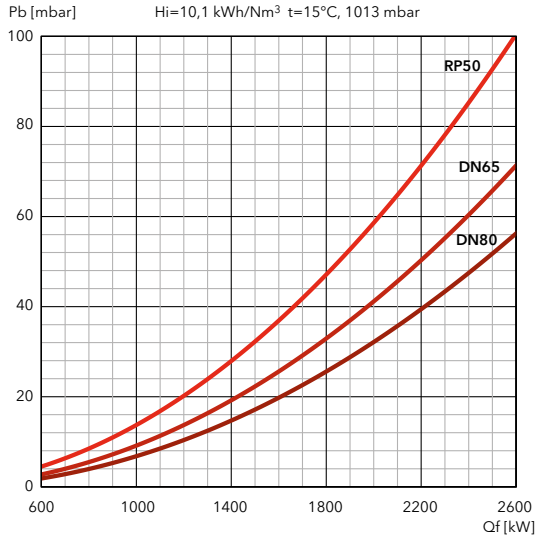

Each gas train must be installed with its own **connection pipe**, to be selected from the following table:

Gas train model	Code	Connection pipe
GT-S1-VGD20-RP50-PS3	3148688	3144686
GT-S1-VGD40-DN65-PS3	3148689	3148771
GT-S1-VGD40-DN80-PS3	3148690	3148772
GT-D1-MBEVB-RP50-PS3	3148697	3144686
GT-D1-MBEVB-DN65-PS3	3148698	3148771
GT-D1-MBEVB-DN80-PS3	3148699	3148772

Dimensions of gas trains and connection pipes: see page 304

EK-TRON 6.350 G-RF3

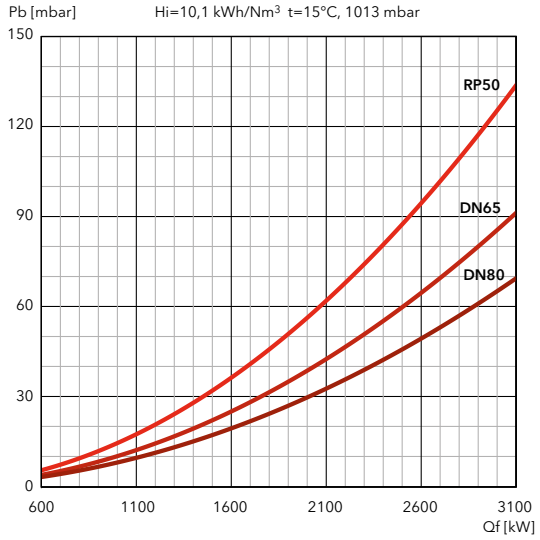

Each gas train must be installed with its own **connection pipe**, to be selected from the following table:

Gas train model	Code	Connection pipe
GT-S1-VGD20-RP50-PS3	3148688	3144686
GT-S1-VGD40-DN65-PS3	3148689	3148771
GT-S1-VGD40-DN80-PS3	3148690	3148772
GT-D1-MBEVB-RP50-PS3	3148697	3144686
GT-D1-MBEVB-DN65-PS3	3148698	3148771
GT-D1-MBEVB-DN80-PS3	3148699	3148772

Dimensions of gas trains and connection pipes: see page 304

EK-TRON 6.400 G-RF3

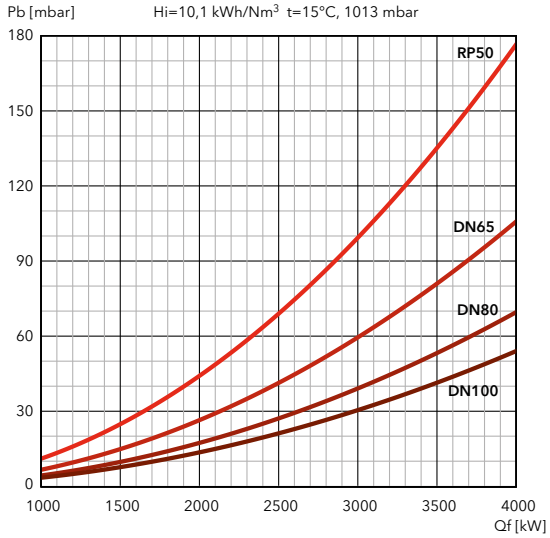

Each gas train must be installed with its own **connection pipe**, to be selected from the following table:

Gas train model	Code	Connection pipe
GT-S1-VGD20-RP50-PS3	3148688	3148770
GT-S1-VGD40-DN65-PS3	3148689	3145997
GT-S1-VGD40-DN80-PS3	3148690	3145864
GT-S1-VGD40-DN100-PS3	3148691	3145821
GT-D1-MBEVB-RP50-PS3	3148697	3148770
GT-D1-MBEVB-DN65-PS3	3148698	3145997
GT-D1-MBEVB-DN80-PS3	3148699	3145864
GT-D1-MBEVB-DN100-PS3	3148700	3145821

Dimensions of gas trains and connection pipes: see page 304

PRESSURE LOSS [BURNER HEAD + GAS TRAIN] (mbar)

EK-TRON 7.500 G-RF3

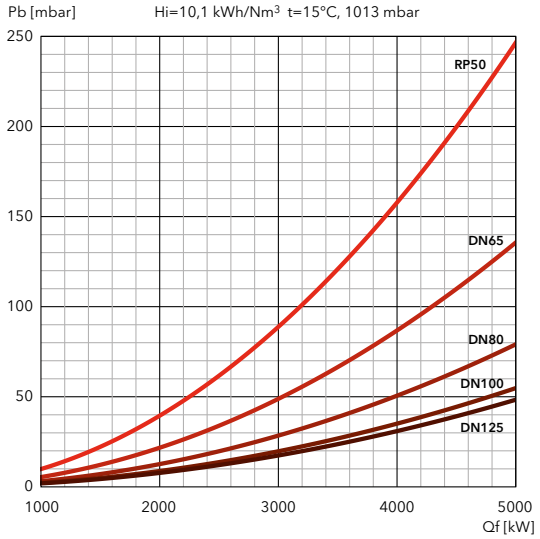

Each gas train must be installed with its own **connection pipe**, to be selected from the following table:

Gas train model	Code	Connection pipe
GT-S1-VGD20-RP50-PS3	3148688	3148770
GT-S1-VGD40-DN65-PS3	3148689	3148766
GT-S1-VGD40-DN80-PS3	3148690	3148767
GT-S1-VGD40-DN100-PS3	3148691	3148768
GT-S1-VGD40-DN125-PS3	3148692	3148769
GT-D1-MBEVB-RP50-PS3	3148697	3148770
GT-D1-MBEVB-DN65-PS3	3148698	3148766
GT-D1-MBEVB-DN80-PS3	3148699	3148767
GT-D1-MBEVB-DN100-PS3	3148700	3148768

Dimensions of gas trains and connection pipes: see page 304

EK-TRON 7.600 G-RF3

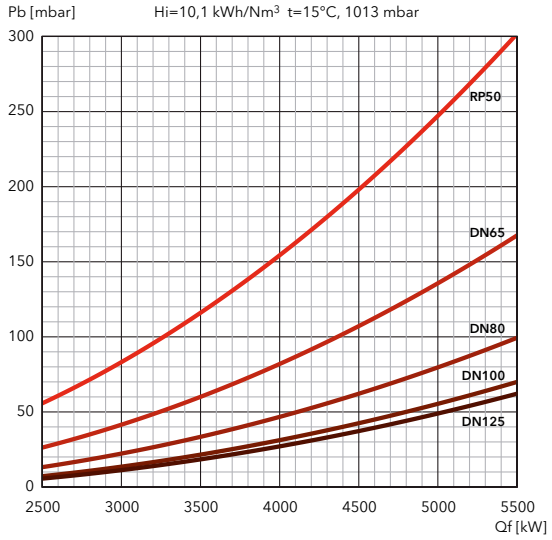

Each gas train must be installed with its own **connection pipe**, to be selected from the following table:

Gas train model	Code	Connection pipe
GT-S1-VGD20-RP50-PS3	3148688	3148770
GT-S1-VGD40-DN65-PS3	3148689	3148766
GT-S1-VGD40-DN80-PS3	3148690	3148767
GT-S1-VGD40-DN100-PS3	3148691	3148768
GT-S1-VGD40-DN125-PS3	3148692	3148769
GT-D1-MBEVB-RP50-PS3	3148697	3148770
GT-D1-MBEVB-DN65-PS3	3148698	3148766
GT-D1-MBEVB-DN80-PS3	3148699	3148767
GT-D1-MBEVB-DN100-PS3	3148700	3148768

Dimensions of gas trains and connection pipes: see page 304

FILTERS

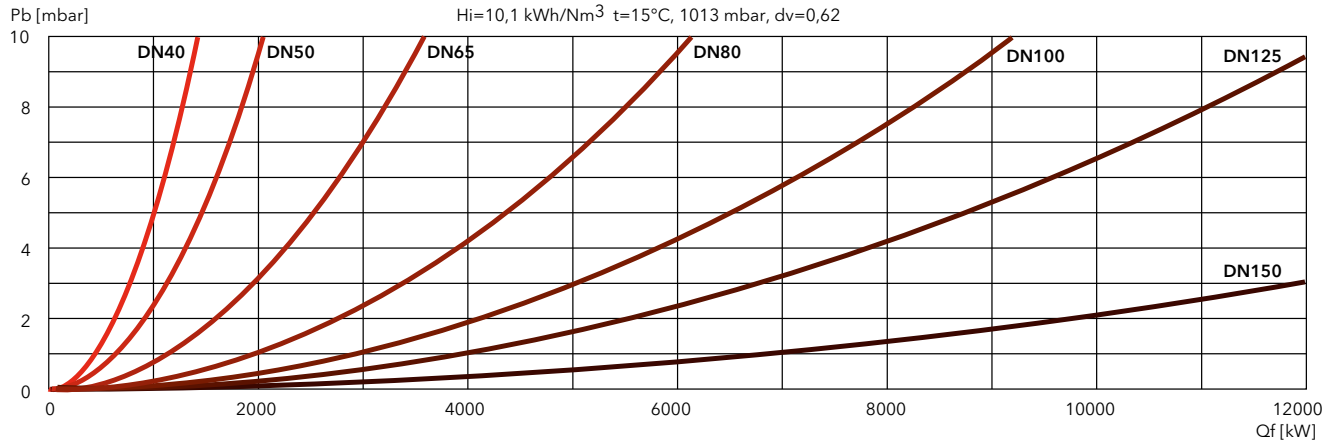

EK-TRON

GAS

Low NOx Class 2

EK-TRON 5 G-E / EK-TRON 6 G-E / EK-TRON 7 G-E

340 … 6050 kW
Two stage progressive/modulating electronic

- **Fuel:** natural gas, Hi = 6,99 … 11,39 kWh/Nm³
- **Emissions:** Low NOx class 2 burners (≤120 mg/kWh) according to EN676 Directive
- **Protection level:** IP 40

TECHNICAL DATA

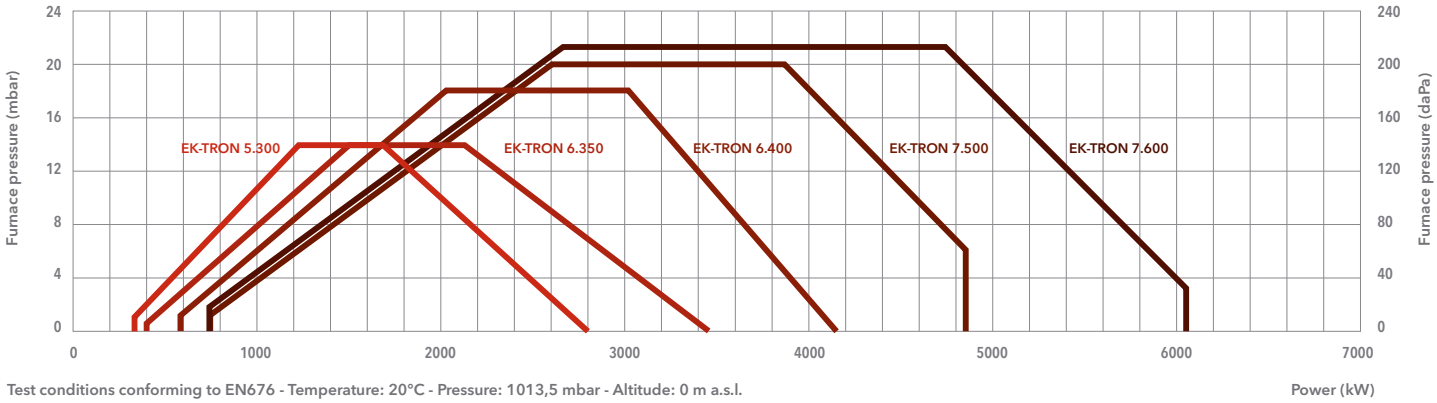

Test conditions conforming to EN676 - Temperature: 20°C - Pressure: 1013,5 mbar - Altitude: 0 m a.s.l.

		EK-TRON 5.300 G-E	EK-TRON 6.350 G-E	EK-TRON 6.400 G-E	EK-TRON 7.500 G-E	EK-TRON 7.600 G-E
Operating range		340 – 2800 kW	400 – 3450 kW	590 – 4150 kW	750 – 4850 kW	740 – 6050 kW
Gas connection		DN50	DN50	DN65	DN65	DN65
Control box / flame detector		BT320* / ionization	BT320* / ionization	BT320* / ionization	BT320* / ionization	BT320* / ionization
Auxiliary voltage		1NPE AC 230 V - 50 Hz TN-S	1NPE AC 230 V - 50 Hz TN-S	1NPE AC 230 V - 50 Hz TN-S	1NPE AC 230 V - 50 Hz TN-S	1NPE AC 230 V - 50 Hz TN-S
Power supply		3NPE AC 400 V - 50 Hz	3NPE AC 400 V - 50 Hz	3NPE AC 400 V - 50 Hz	3NPE AC 400 V - 50 Hz	3NPE AC 400 V - 50 Hz
Fan motor		4 kW	5,5 kW	7,5 kW	11 kW	15 kW
Acoustic level		<83 dB(A)	<84 dB(A)	<85 dB(A)	<85 dB(A)	<85 dB(A)
Burner codes (body + head)	KN	**3148784**	**3148785**	**3148786**	**3148787**	**3148788**
	KM	**3148325**	**3148327**	**3148329**	**3148331**	**3148333**
	KL	**3148326**	**3148328**	**3148330**	**3148332**	**3148334**

*: BT330 for 72H versions

OTHER AVAILABLE VERSIONS

Variant		EK-TRON 5.300 G-E	EK-TRON 6.350 G-E	EK-TRON 6.400 G-E	EK-TRON 7.500 G-E	EK-TRON 7.600 G-E
72H	KN	**3148794**	**3148795**	**3148796**	**3148797**	**3148798**
	KM	**3148498**	**3148500**	**3148502**	**3148504**	**3148506**
	KL	**3148499**	**3148501**	**3148503**	**3148505**	**3148507**
FCE	KN	**3148804**	**3148805**	**3148806**	**3148807**	**3148808**
	KM	**3148522**	**3148524**	**3148526**	**3148528**	**3148530**
	KL	**3148523**	**3148525**	**3148527**	**3148529**	**3148531**
72H + FCE	KN	**3148809**	**3148810**	**3148811**	**3148812**	**3148813**
	KM	**3148534**	**3148536**	**3148538**	**3148540**	**3148542**
	KL	**3148535**	**3148537**	**3148539**	**3148541**	**3148543**

GAS TRAINS AND FILTERS

DUNGS models	Code
GT-D1-MBEVB-RP50-PS2	3148693
GT-D1-MBEVB-DN65-PS2	3148694
GT-D1-MBEVB-DN80-PS2	3148695
GT-D1-MBEVB-DN100-PS2	3148696

SIEMENS models	Code
GT-S1-VGD20-RP50-PS2	3148683
GT-S1-VGD40-DN65-PS2	3148684
GT-S1-VGD40-DN80-PS2	3148685
GT-S1-VGD40-DN100-PS2	3148686
GT-S1-VGD40-DN125-PS2	3148687

Filters	Code
FG-Rp2"	3757200
FG-DN65	3757198
FG-DN80	3757201
FG-DN100	3757195
FG-DN125	3757209

DIMENSIONS (mm)

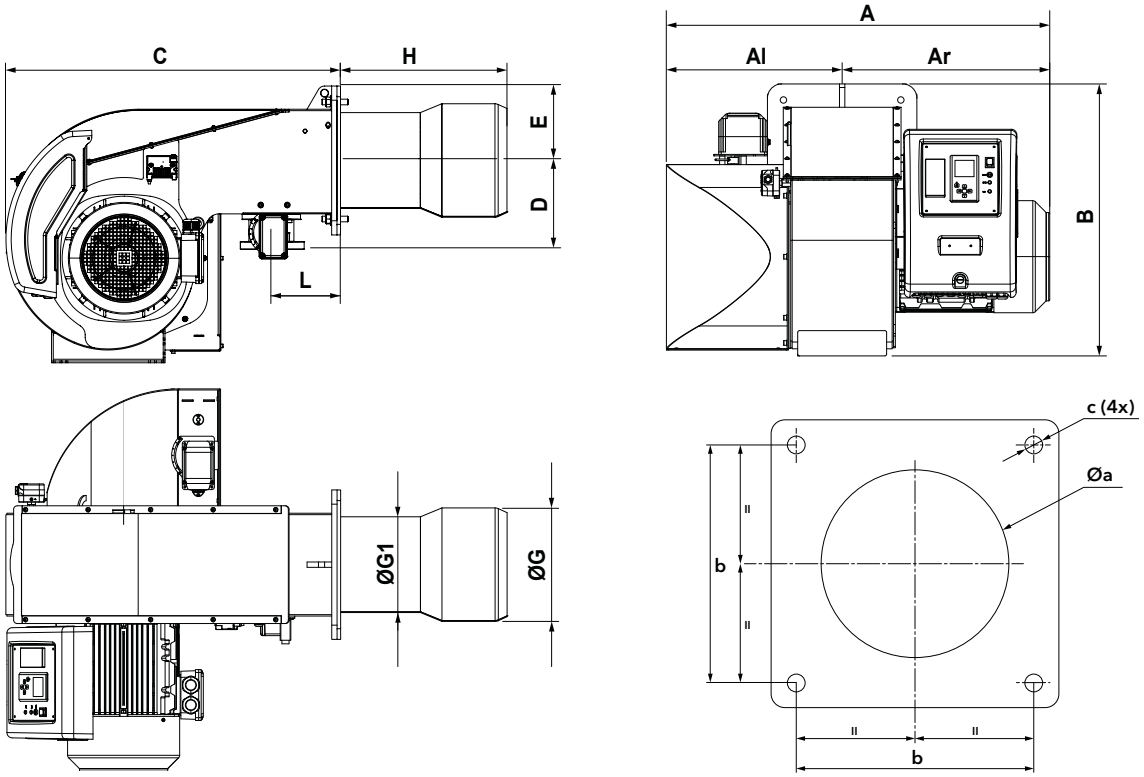

Model	A	Al	Ar	B	C	D	E	ØG	ØG1	H			L	Øa	b	c
										KN	KM	KL				
EK-TRON 5.300 G-E	813	356	457	606	714	245	190	300	216	385	485	585	125	315-325	315	M16
EK-TRON 6.350 G-E	875	387	488	684	828	245	190	290	240	328	428	528	195	305-315	315	M16
EK-TRON 6.400 G-E	875	387	488	684	828	250	190	320	270	392	448	563	195	335-345	315	M16
EK-TRON 7.500 G-E	1083	494	589	780	943	251	210	320	270	373	470	573	195	335-345	330	M16
EK-TRON 7.600 G-E	1083	494	589	780	943	251	210	360	270	373	470	573	195	375-385	330	M16

PACKAGING

The burner is delivered on a pallet with:
- burner body and combustion head (to be mounted by the installer)
- gas train and filter
- boiler fixing accessories
- technical documentation

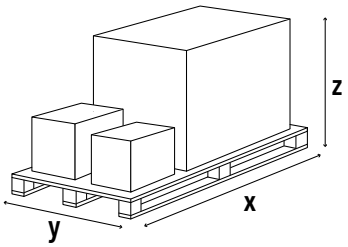

Model	Dimensions (mm)		
	X	Y	Z
EK-TRON 5.300 G-E	1100	900	720
EK-TRON 6.350 G-E	1100	900	720
EK-TRON 6.400 G-E	1100	900	720
EK-TRON 7.500 G-E	1300	1050	900
EK-TRON 7.600 G-E	1300	1050	900

EK-TRON 5 G-E / EK-TRON 6 G-E / EK-TRON 7 G-E

340 ... 6050 kW
Two stage progressive/modulating electronic

PRESSURE LOSS [BURNER HEAD + GAS TRAIN] (mbar)

EK-TRON 5.300 G-E

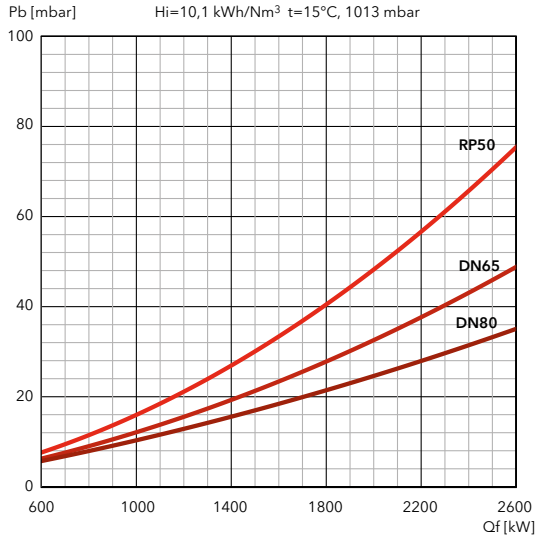

Each gas train must be installed with its own **connection pipe**, to be selected from the following table:

Gas train model	Code	Connection pipe
GT-S1-VGD20-RP50-PS2	3148683	3144686
GT-S1-VGD40-DN65-PS2	3148684	3148771
GT-S1-VGD40-DN80-PS2	3148685	3148772
GT-D1-MBEVB-RP50-PS2	3148693	3144686
GT-D1-MBEVB-DN65-PS2	3148694	3148771
GT-D1-MBEVB-DN80-PS2	3148695	3148772

Dimensions of gas trains and connection pipes: see page 304

EK-TRON 6.350 G-E

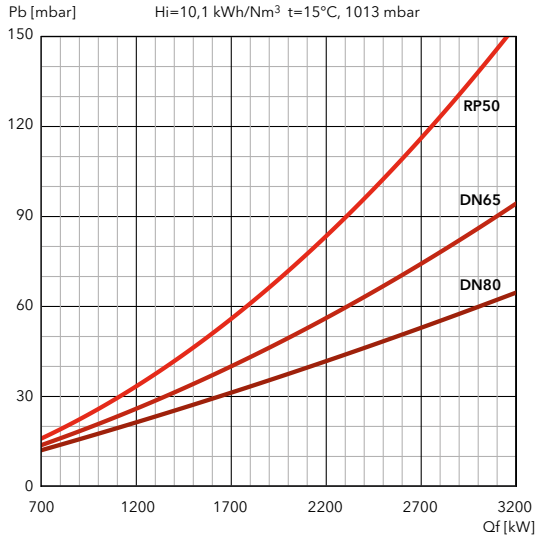

Each gas train must be installed with its own **connection pipe**, to be selected from the following table:

Gas train model	Code	Connection pipe
GT-S1-VGD20-RP50-PS2	3148683	3144686
GT-S1-VGD40-DN65-PS2	3148684	3148771
GT-S1-VGD40-DN80-PS2	3148685	3148772
GT-D1-MBEVB-RP50-PS2	3148693	3144686
GT-D1-MBEVB-DN65-PS2	3148694	3148771
GT-D1-MBEVB-DN80-PS2	3148695	3148772

Dimensions of gas trains and connection pipes: see page 304

EK-TRON 6.400 G-E

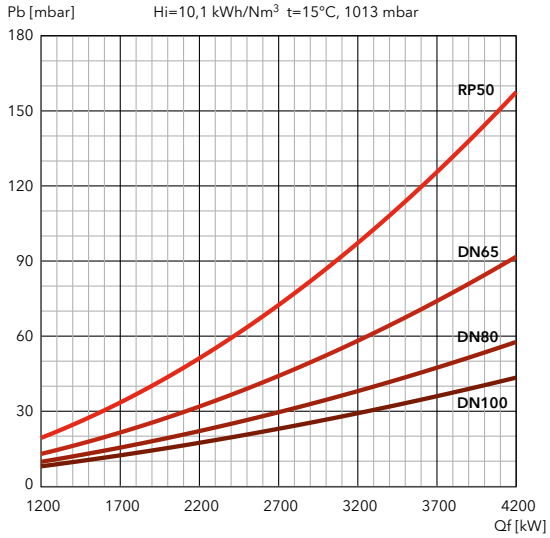

Each gas train must be installed with its own **connection pipe**, to be selected from the following table:

Gas train model	Code	Connection pipe
GT-S1-VGD20-RP50-PS2	3148683	3148770
GT-S1-VGD40-DN65-PS2	3148684	3145997
GT-S1-VGD40-DN80-PS2	3148685	3145864
GT-S1-VGD40-DN100-PS2	3148686	3145821
GT-D1-MBEVB-RP50-PS2	3148693	3148770
GT-D1-MBEVB-DN65-PS2	3148694	3145997
GT-D1-MBEVB-DN80-PS2	3148695	3145864
GT-D1-MBEVB-DN100-PS2	3148696	3145821

Dimensions of gas trains and connection pipes: see page 304

PRESSURE LOSS [BURNER HEAD + GAS TRAIN] (mbar)

EK-TRON 7.500 G-E

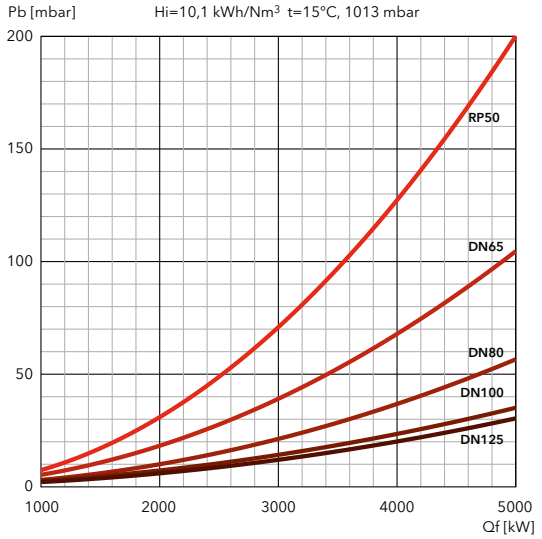

Each gas train must be installed with its own **connection pipe**, to be selected from the following table:

Gas train model	Code	Connection pipe
GT-S1-VGD20-RP50-PS2	3148683	3148770
GT-S1-VGD40-DN65-PS2	3148684	3148766
GT-S1-VGD40-DN80-PS2	3148685	3148767
GT-S1-VGD40-DN100-PS2	3148686	3148768
GT-S1-VGD40-DN125-PS2	3148687	3148769
GT-D1-MBEVB-RP50-PS2	3148693	3148770
GT-D1-MBEVB-DN65-PS2	3148694	3148766
GT-D1-MBEVB-DN80-PS2	3148695	3148767
GT-D1-MBEVB-DN100-PS2	3148696	3148768

Dimensions of gas trains and connection pipes: see page 304

EK-TRON 7.600 G-E

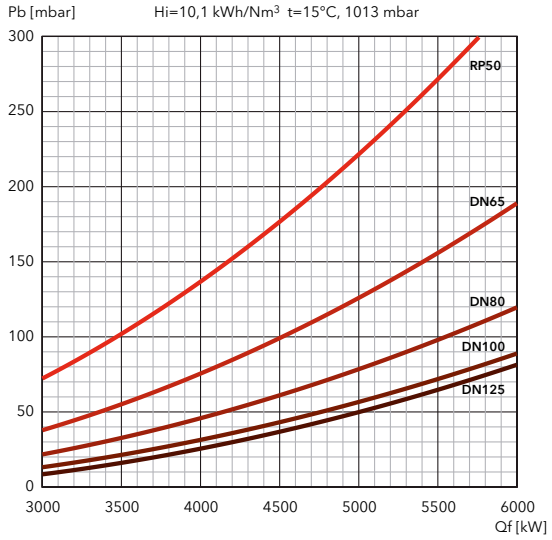

Each gas train must be installed with its own **connection pipe**, to be selected from the following table:

Gas train model	Code	Connection pipe
GT-S1-VGD20-RP50-PS2	3148683	3148770
GT-S1-VGD40-DN65-PS2	3148684	3148766
GT-S1-VGD40-DN80-PS2	3148685	3148767
GT-S1-VGD40-DN100-PS2	3148686	3148768
GT-S1-VGD40-DN125-PS2	3148687	3148769
GT-D1-MBEVB-RP50-PS2	3148693	3148770
GT-D1-MBEVB-DN65-PS2	3148694	3148766
GT-D1-MBEVB-DN80-PS2	3148695	3148767
GT-D1-MBEVB-DN100-PS2	3148696	3148768

Dimensions of gas trains and connection pipes: see page 304

FILTERS

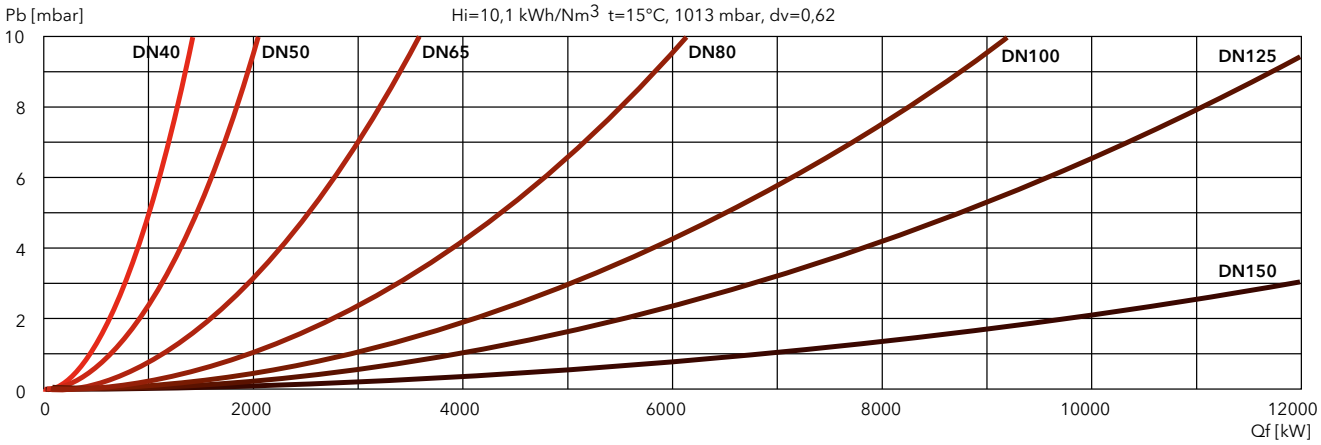

EK-TRON

GAS

Low NOx Class 2

EK-TRON 5 G-R / EK-TRON 6 G-R / EK-TRON 7 G-R

340 … 6050 kW
Two stage progressive/modulating mechanical

- **Fuel:** natural gas, Hi = 6,99 … 11,39 kWh/Nm³
- **Emissions:** Low NOx class 2 burners (≤120 mg/kWh) according to EN676 Directive
- **Protection level:** IP 40

TECHNICAL DATA

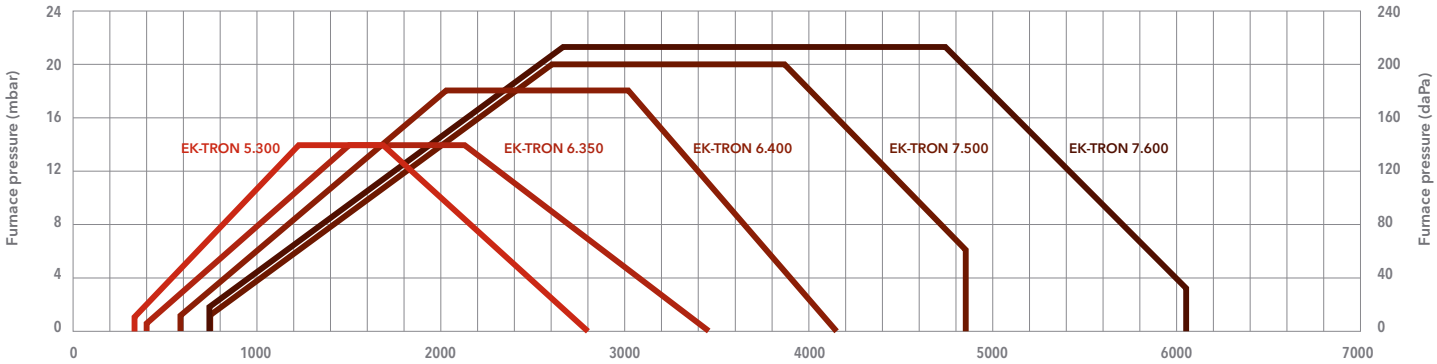

Test conditions conforming to EN676 - Temperature: 20°C - Pressure: 1013,5 mbar - Altitude: 0 m a.s.l.

		EK-TRON 5.300 G-R	EK-TRON 6.350 G-R	EK-TRON 6.400 G-R	EK-TRON 7.500 G-R	EK-TRON 7.600 G-R
Operating range		340 – 2800 kW	400 – 3450 kW	590 – 4150 kW	750 – 4850 kW	740 – 6050 kW
Gas connection		DN50	DN50	DN65	DN65	DN65
Control box / flame detector		LME73* / ionization	LME73* / ionization	LME73* / ionization	LME73* / ionization	LME73* / ionization
Auxiliary voltage		1NPE AC 230 V - 50 Hz TN-S	1NPE AC 230 V - 50 Hz TN-S	1NPE AC 230 V - 50 Hz TN-S	1NPE AC 230 V - 50 Hz TN-S	1NPE AC 230 V - 50 Hz TN-S
Power supply		3NPE AC 400 V - 50 Hz	3NPE AC 400 V - 50 Hz	3NPE AC 400 V - 50 Hz	3NPE AC 400 V - 50 Hz	3NPE AC 400 V - 50 Hz
Fan motor		4 kW	5,5 kW	7,5 kW	11 kW	15 kW
Acoustic level		<83 dB(A)	<84 dB(A)	<85 dB(A)	<85 dB(A)	<85 dB(A)
Burner codes (body + head)	KN	**3148789**	**3148790**	**3148791**	**3148792**	**3148793**
	KM	**3148337**	**3148339**	**3148341**	**3148343**	**3148345**
	KL	**3148338**	**3148340**	**3148342**	**3148344**	**3148346**

*: LME75 for 72H versions

OTHER AVAILABLE VERSIONS

Variant		EK-TRON 5.300 G-R	EK-TRON 6.350 G-R	EK-TRON 6.400 G-R	EK-TRON 7.500 G-R	EK-TRON 7.600 G-R
72H	KN	**3148799**	**3148800**	**3148801**	**3148802**	**3148803**
	KM	**3148510**	**3148512**	**3148514**	**3148516**	**3148518**
	KL	**3148511**	**3148513**	**3148515**	**3148517**	**3148519**

GAS TRAINS AND FILTERS

DUNGS models	Code
GT-D1-MBEVB-RP50-PS3	3148697
GT-D1-MBEVB-DN65-PS3	3148698
GT-D1-MBEVB-DN80-PS3	3148699
GT-D1-MBEVB-DN100-PS3	3148700

SIEMENS models	Code
GT-S1-VGD20-RP50-PS3	3148688
GT-S1-VGD40-DN65-PS3	3148689
GT-S1-VGD40-DN80-PS3	3148690
GT-S1-VGD40-DN100-PS3	3148691
GT-S1-VGD40-DN125-PS3	3148692

Filters	Code
FG-Rp2"	3757200
FG-DN65	3757198
FG-DN80	3757201
FG-DN100	3757195
FG-DN125	3757209

DIMENSIONS (mm)

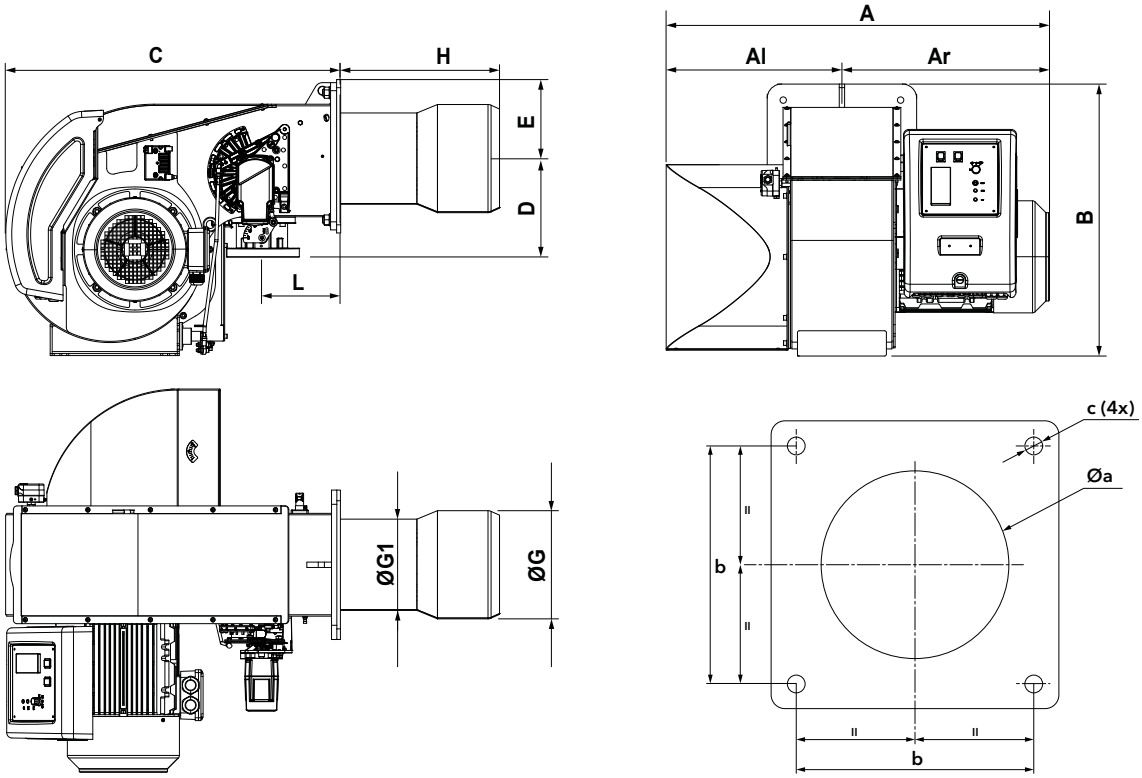

Model	A	Al	Ar	B	C	D	E	ØG	ØG1	H			L	Øa	b	c
										KN	KM	KL				
EK-TRON 5.300 G-R	813	356	457	606	714	245	190	300	216	385	485	585	125	315-325	315	M16
EK-TRON 6.350 G-R	875	387	488	684	828	245	190	290	240	328	428	528	195	305-315	315	M16
EK-TRON 6.400 G-R	875	387	488	684	828	250	190	320	270	392	448	563	195	335-345	315	M16
EK-TRON 7.500 G-R	1083	494	589	780	943	251	210	320	270	373	470	573	195	335-345	330	M16
EK-TRON 7.600 G-R	1083	494	589	780	943	251	210	360	270	373	470	573	195	375-385	330	M16

PACKAGING

The burner is delivered on a pallet with:
- burner body and combustion head (to be mounted by the installer)
- gas train and filter
- boiler fixing accessories
- technical documentation

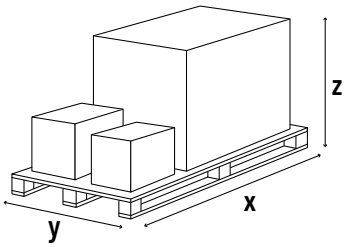

Model	Dimensions (mm)		
	X	Y	Z
EK-TRON 5.300 G-R	1100	900	720
EK-TRON 6.350 G-R	1100	900	720
EK-TRON 6.400 G-R	1100	900	720
EK-TRON 7.500 G-R	1300	1050	900
EK-TRON 7.600 G-R	1300	1050	900

EK-TRON 5 G-R / EK-TRON 6 G-R / EK-TRON 7 G-R

340 ... 6050 kW
Two stage progressive/modulating mechanical

PRESSURE LOSS [BURNER HEAD + GAS TRAIN] (mbar)

EK-TRON 5.300 G-R

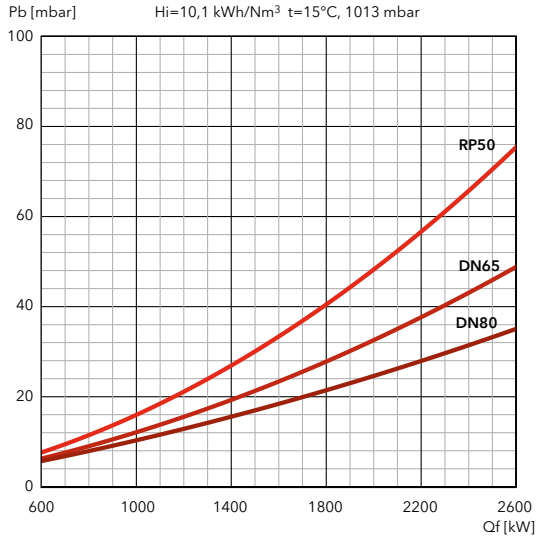

Each gas train must be installed with its own **connection pipe**, to be selected from the following table:

Gas train model	Code	Connection pipe
GT-S1-VGD20-RP50-PS3	3148688	3144686
GT-S1-VGD40-DN65-PS3	3148689	3148771
GT-S1-VGD40-DN80-PS3	3148690	3148772
GT-D1-MBEVB-RP50-PS3	3148697	3144686
GT-D1-MBEVB-DN65-PS3	3148698	3148771
GT-D1-MBEVB-DN80-PS3	3148699	3148772

Dimensions of gas trains and connection pipes: see page 304

EK-TRON 6.350 G-R

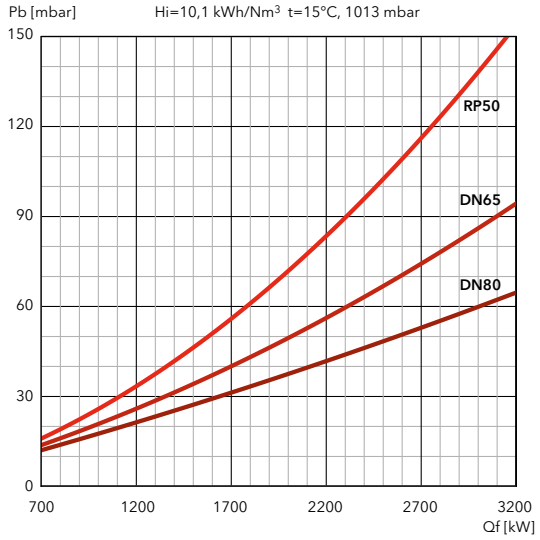

Each gas train must be installed with its own **connection pipe**, to be selected from the following table:

Gas train model	Code	Connection pipe
GT-S1-VGD20-RP50-PS3	3148688	3144686
GT-S1-VGD40-DN65-PS3	3148689	3148771
GT-S1-VGD40-DN80-PS3	3148690	3148772
GT-D1-MBEVB-RP50-PS3	3148697	3144686
GT-D1-MBEVB-DN65-PS3	3148698	3148771
GT-D1-MBEVB-DN80-PS3	3148699	3148772

Dimensions of gas trains and connection pipes: see page 304

EK-TRON 6.400 G-R

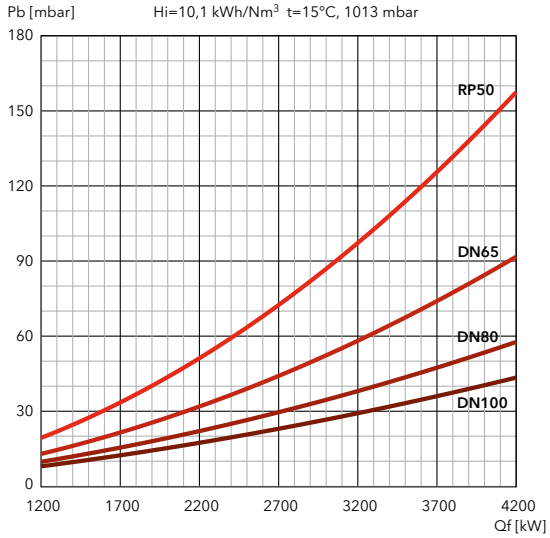

Each gas train must be installed with its own **connection pipe**, to be selected from the following table:

Gas train model	Code	Connection pipe
GT-S1-VGD20-RP50-PS3	3148688	3148770
GT-S1-VGD40-DN65-PS3	3148689	3145997
GT-S1-VGD40-DN80-PS3	3148690	3145864
GT-S1-VGD40-DN100-PS3	3148691	3145821
GT-D1-MBEVB-RP50-PS3	3148697	3148770
GT-D1-MBEVB-DN65-PS3	3148698	3145997
GT-D1-MBEVB-DN80-PS3	3148699	3145864
GT-D1-MBEVB-DN100-PS3	3148700	3145821

Dimensions of gas trains and connection pipes: see page 304

PRESSURE LOSS [BURNER HEAD + GAS TRAIN] (mbar)

EK-TRON 7.500 G-R

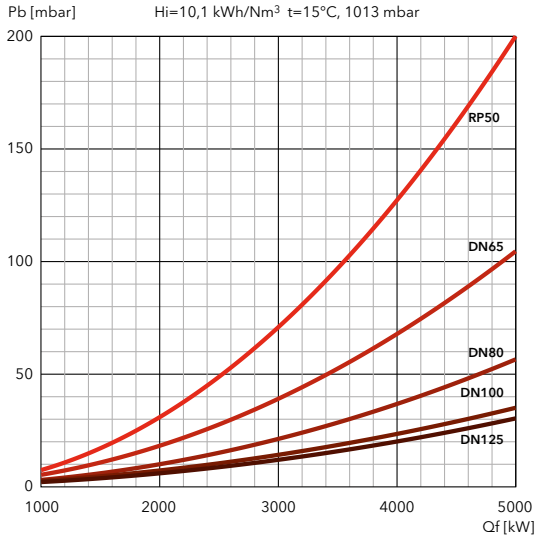

Each gas train must be installed with its own **connection pipe**, to be selected from the following table:

Gas train model	Code	Connection pipe
GT-S1-VGD20-RP50-PS3	3148688	3148770
GT-S1-VGD40-DN65-PS3	3148689	3148766
GT-S1-VGD40-DN80-PS3	3148690	3148767
GT-S1-VGD40-DN100-PS3	3148691	3148768
GT-S1-VGD40-DN125-PS3	3148692	3148769
GT-D1-MBEVB-RP50-PS3	3148697	3148770
GT-D1-MBEVB-DN65-PS3	3148698	3148766
GT-D1-MBEVB-DN80-PS3	3148699	3148767
GT-D1-MBEVB-DN100-PS3	3148700	3148768

Dimensions of gas trains and connection pipes: see page 304

EK-TRON 7.600 G-R

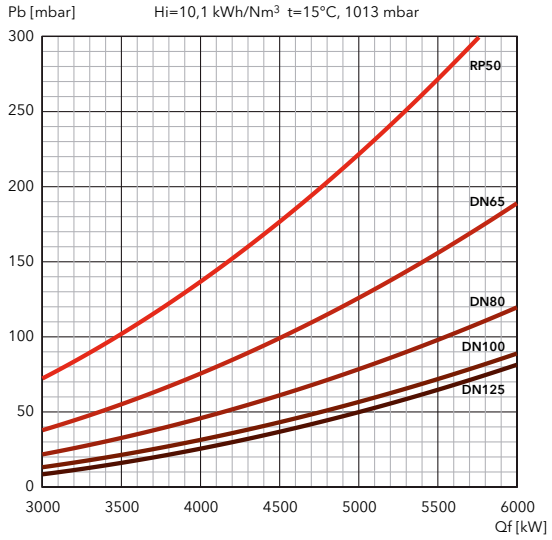

Each gas train must be installed with its own **connection pipe**, to be selected from the following table:

Gas train model	Code	Connection pipe
GT-S1-VGD20-RP50-PS3	3148688	3148770
GT-S1-VGD40-DN65-PS3	3148689	3148766
GT-S1-VGD40-DN80-PS3	3148690	3148767
GT-S1-VGD40-DN100-PS3	3148691	3148768
GT-S1-VGD40-DN125-PS3	3148692	3148769
GT-D1-MBEVB-RP50-PS3	3148697	3148770
GT-D1-MBEVB-DN65-PS3	3148698	3148766
GT-D1-MBEVB-DN80-PS3	3148699	3148767
GT-D1-MBEVB-DN100-PS3	3148700	3148768

Dimensions of gas trains and connection pipes: see page 304

FILTERS

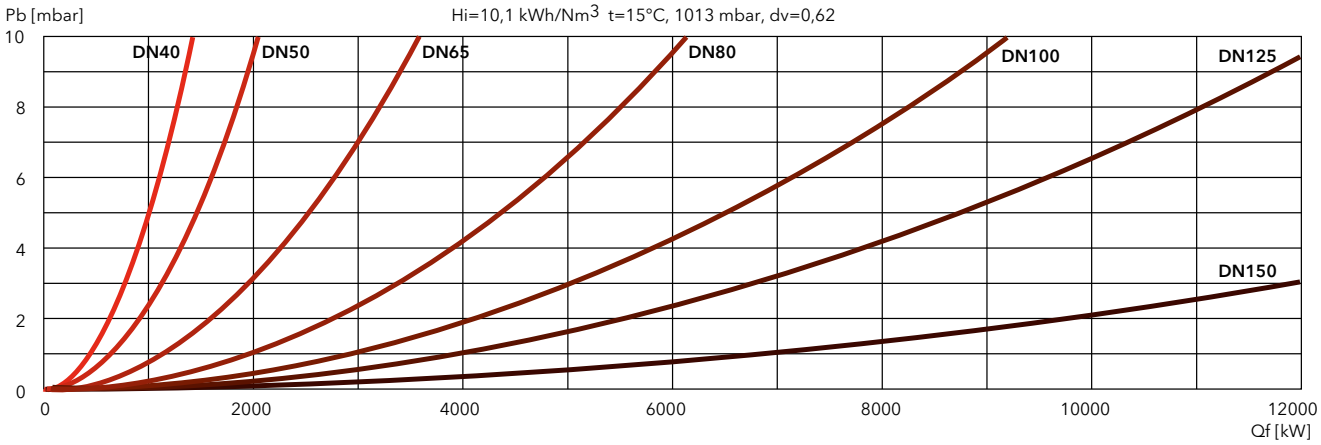

EK-TRON

GAS / LIGHT OIL

Low NOx Class 3

EK-TRON 5 GL-EX2

320 … 2160 kW
Two stage progressive/modulating electronic

- **Fuels:** natural gas, Hi = 6,99 … 11,39 kWh/Nm³
  light oil, viscosity 6 mm²/s at 20°C, Hi = 11,86 kWh/kg
- **Emissions:** Low NOx class 3 (≤80 mg/kWh) according to EN676 in gas
  Low NOx class 2 (≤185 mg/kWh) according to EN267 in light oil
- **Protection level:** IP 40

TECHNICAL DATA

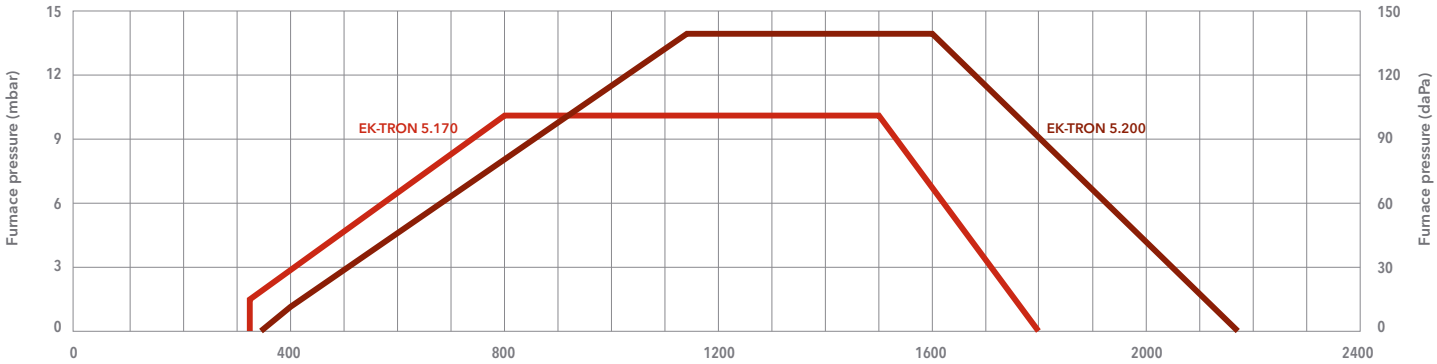

Test conditions conforming to EN676 and EN267 - Temperature: 20°C - Pressure: 1013,5 mbar - Altitude: 0 m a.s.l.

		EK-TRON 5.170 GL-EX2	EK-TRON 5.200 GL-EX2
Operating range		320 – 1800 kW	340 – 2160 kW
Gas connection		DN50	DN50
Control box / flame detector		BT335 / UV cell	BT335 / UV cell
Auxiliary voltage		1NPE AC 230 V - 50 Hz TN-S	1NPE AC 230 V - 50 Hz TN-S
Power supply		3NPE AC 400 V - 50 Hz	3NPE AC 400 V - 50 Hz
Fan motor		50 Hz - 3 kW	50 Hz - 4 kW
Acoustic level		< 75 dB(A)	< 80 dB(A)
Burner codes (body + head)	KN	**3149001**	**3149003**
	KL	**3149002**	**3149004**

OTHER AVAILABLE VERSIONS

Variant		EK-TRON 5.170 GL-EX2	EK-TRON 5.200 GL-EX2
72H	KM	**3149105**	**3149107**
	KL	**3149106**	**3149108**
FCE	KM	**3149119**	**3149121**
	KL	**3149120**	**3149122**
72H + FCE	KM	**3149133**	**3149135**
	KL	**3149134**	**3149136**
FCO	KM	**3149147**	**3149149**
	KL	**3149148**	**3149150**
72H + FCO	KM	**3149161**	**3149163**
	KL	**3149162**	**3149164**

GAS TRAINS AND FILTERS

DUNGS models	Code
GT-D1-MBDLE415-RP40-PS2	3149611
GT-D1-MBDLE420-RP50-PS2	3149612

SIEMENS models	Code
GT-S1-VGD20-RP50-PS2	3148683
GT-S1-VGD40-DN65-PS2	3148684
GT-S1-VGD40-DN80-PS2	3148685

Filters	Code
FG-Rp1"1/2	3757199
FG-Rp2"	3757200
FG-DN65	3757198
FG-DN80	3757201

DIMENSIONS (mm)

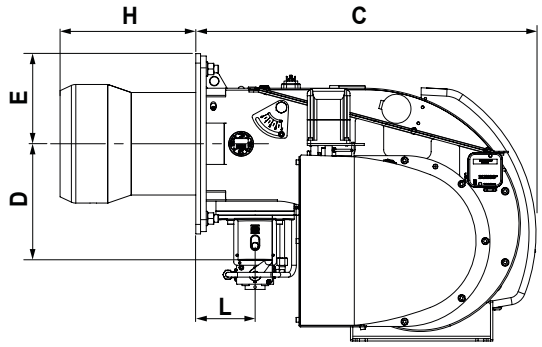

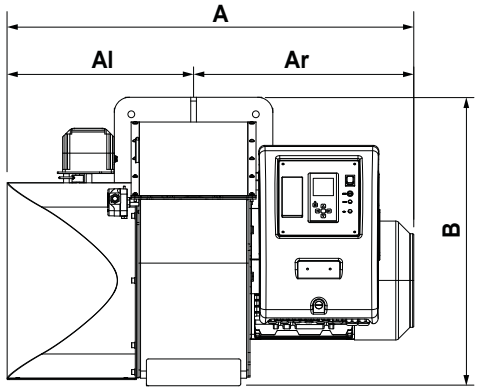

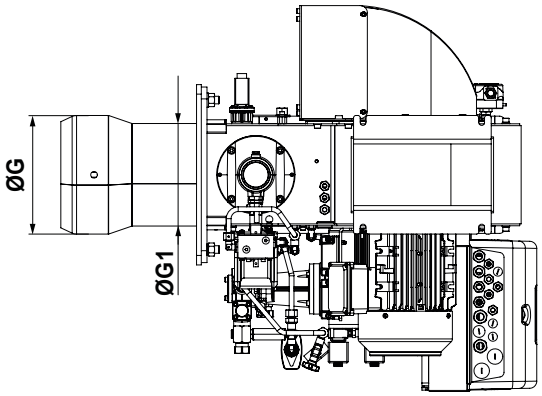

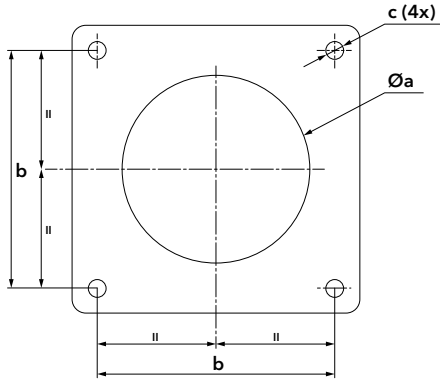

Model	A	Al	Ar	B	C	D	E	ØG	ØG1	H		L	Øa	b	c
										KN	KL				
EK-TRON 5.170	813	356	457	606	717	245	190	250	216	286	486	125	265-275	315	M16
EK-TRON 5.200	813	356	457	606	717	245	190	270	216	286	486	125	265-275	315	M16

PACKAGING

The burner is delivered on a pallet with:
- burner body and combustion head (to be mounted by the installer)
- gas train and filter
- boiler fixing accessories
- technical documentation

Nozzles not included,
to be added in case of order: see page 63

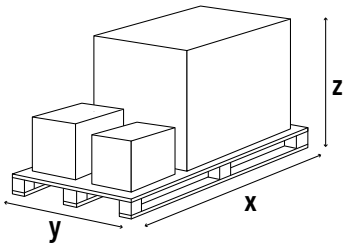

Model	Dimensions (mm)		
	X	Y	Z
EK-TRON 5.170	1100	900	720
EK-TRON 5.200	1100	900	720

EK-TRON 5 GL-EX2

320 ... 2160 kW
Two stage progressive/modulating electronic

PRESSURE LOSS [BURNER HEAD + GAS TRAIN] (mbar)

EK-TRON 5.170 GL-EX2

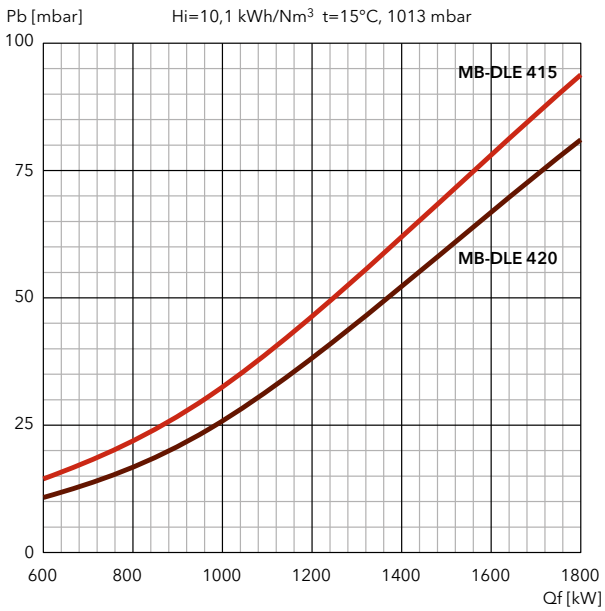

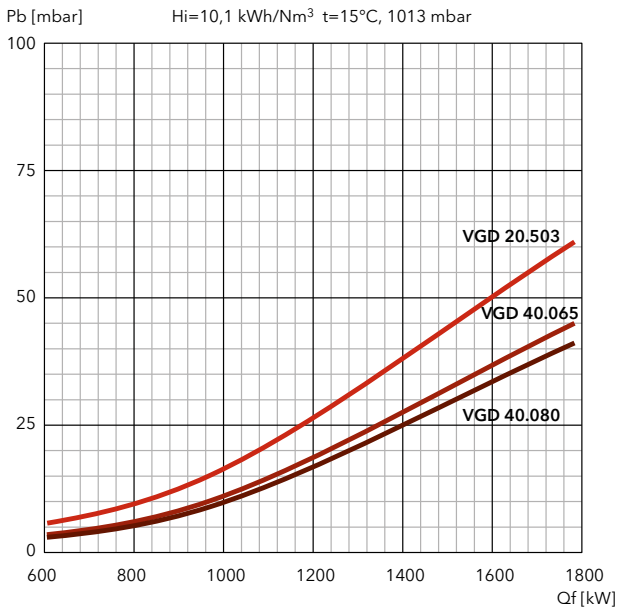

Each gas train must be installed with its own **connection pipe**, to be selected from the following table:

Gas train model	Code	Connection pipe
GT-D1-MBDLE415-RP40-PS2	3149611	3144686
GT-D1-MBDLE420-RP50-PS2	3149612	3144686
GT-S1-VGD20-RP50-PS2	3148683	3144686
GT-S1-VGD40-DN65-PS2	3148684	3148771
GT-S1-VGD40-DN80-PS2	3148685	3148772

Dimensions of gas trains and connection pipes: see page 306

FILTERS

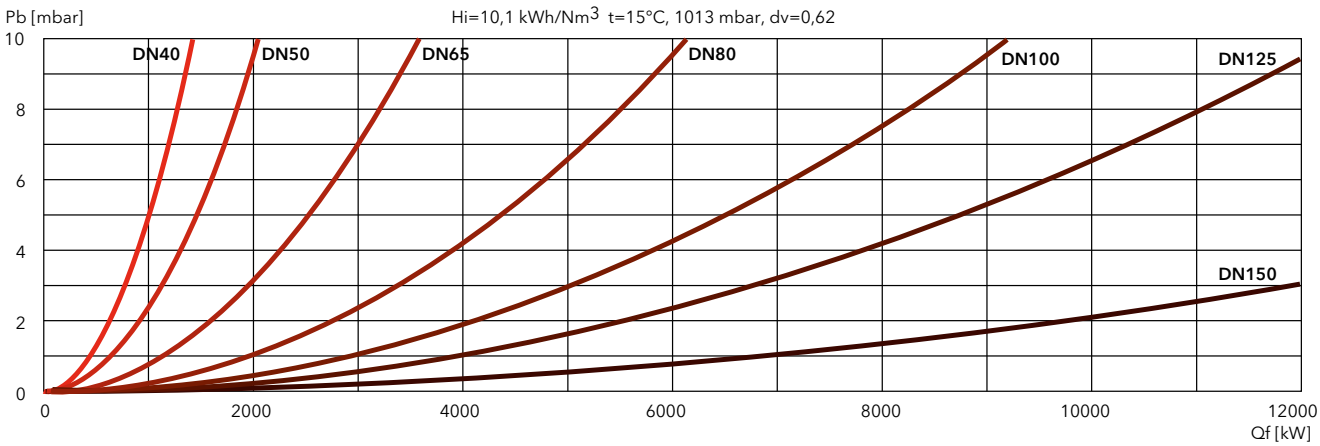

PRESSURE LOSS [BURNER HEAD + GAS TRAIN] (mbar)

EK-TRON 5.200 GL-EX2

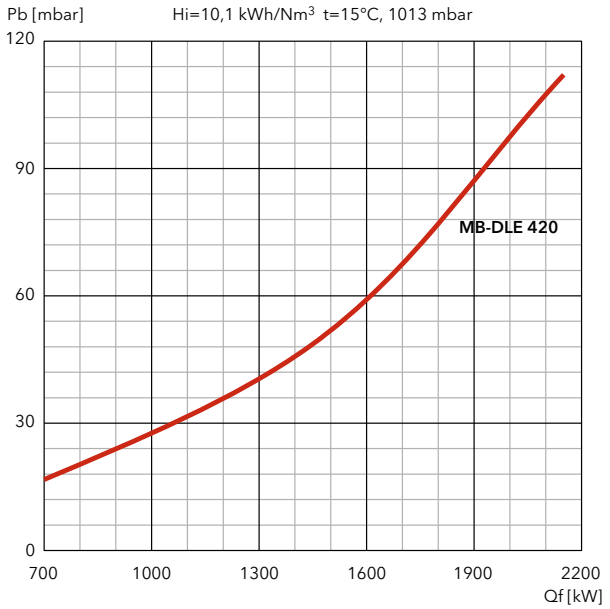

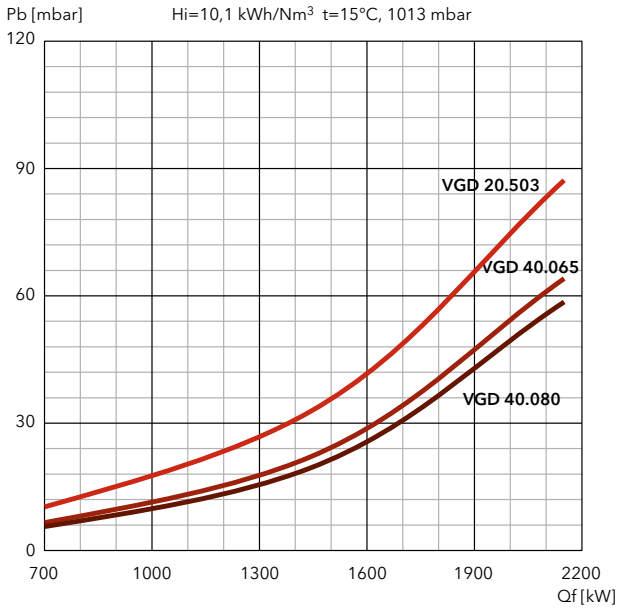

Each gas train must be installed with its own **connection pipe**, to be selected from the following table:

Gas train model	Code	Connection pipe
GT-D1-MBDLE420-RP50-PS2	3149612	3144686
GT-S1-VGD20-RP50-PS2	3148683	3144686
GT-S1-VGD40-DN65-PS2	3148684	3148771
GT-S1-VGD40-DN80-PS2	3148685	3148772

Dimensions of gas trains and connection pipes: see page 306

FILTERS

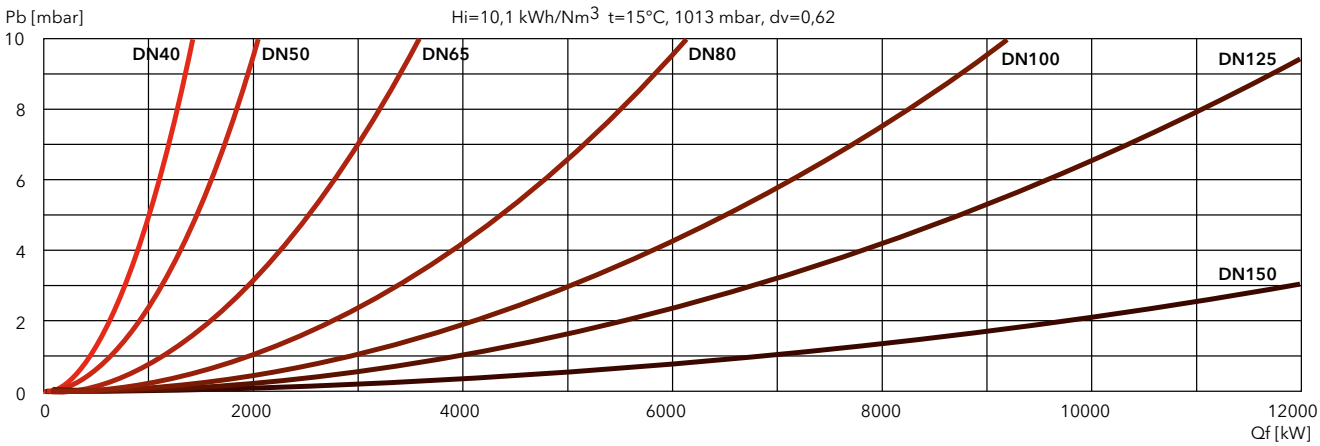

EK-TRON

GAS / LIGHT OIL

Low NOx Class 3

EK-TRON 6 GL-EX2

600 … 3900 kW
Two stage progressive/modulating electronic

- **Fuels:** natural gas, Hi = 6,99 … 11,39 kWh/Nm³
  light oil, viscosity 6 mm²/s at 20°C, Hi = 11,86 kWh/kg
- **Emissions:** Low NOx class 3 (≤80 mg/kWh) according to EN676 in gas
  Low NOx class 2 (≤185 mg/kWh) according to EN267 in light oil
- **Protection level:** IP 40

TECHNICAL DATA

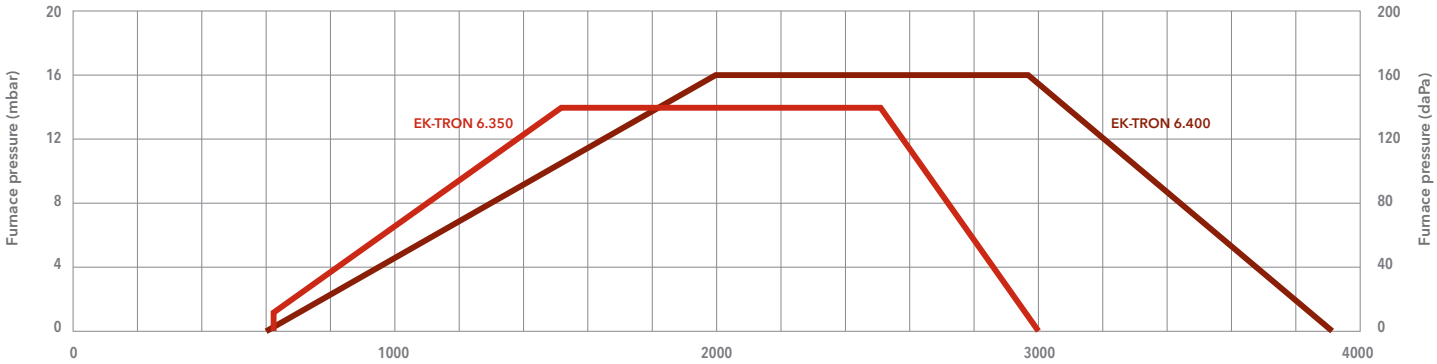

Test conditions conforming to EN676 and EN267 - Temperature: 20°C - Pressure: 1013,5 mbar - Altitude: 0 m a.s.l.

Power (kW)

		EK-TRON 6.350 GL-EX2	EK-TRON 6.400 GL-EX2
Operating range		610 – 3200 kW	600 – 3900 kW
Gas connection		DN50	DN65
Control box / flame detector		BT335 / KLC20	BT335 / KLC20
Auxiliary voltage		1NPE AC 230 V - 50 Hz TN-S	1NPE AC 230 V - 50 Hz TN-S
Power supply		3NPE AC 400 V - 50 Hz	3NPE AC 400 V - 50 Hz
Fan motor		50 Hz - 5,5 kW	50 Hz - 7,5 kW
Acoustic level		< 84 dB(A)	< 85 dB(A)
Burner codes (body + head)	KN	**3149007**	**3149009**
	KL	**3149008**	**3149010**

OTHER AVAILABLE VERSIONS

Variant		EK-TRON 6.350 GL-EX2	EK-TRON 6.400 GL-EX2
72H	KN	**3149111**	**3149113**
	KL	**3149112**	**3149114**
FCE	KN	**3149125**	**3149127**
	KL	**3149126**	**3149128**
72H + FCE	KN	**3149139**	**3149141**
	KL	**3149140**	**3149142**
FCO	KN	**3149153**	**3149155**
	KL	**3149154**	**3149156**
72H + FCO	KN	**3149167**	**3149169**
	KL	**3149168**	**3149170**

GAS TRAINS AND FILTERS

DUNGS models	Code
GT-D1-MBEVB-RP50-PS2	3148693
GT-D1-MBEVB-DN65-PS2	3148694
GT-D1-MBEVB-DN80-PS2	3148695
GT-D1-MBEVB-DN100-PS2	3148696

SIEMENS models	Code
GT-S1-VGD20-RP50-PS2	3148683
GT-S1-VGD40-DN65-PS2	3148684
GT-S1-VGD40-DN80-PS2	3148685
GT-S1-VGD40-DN100-PS2	3148686

Filters	Code
FG-Rp2"	3757200
FG-DN65	3757198
FG-DN80	3757201
FG-DN100	3757195

DIMENSIONS (mm)

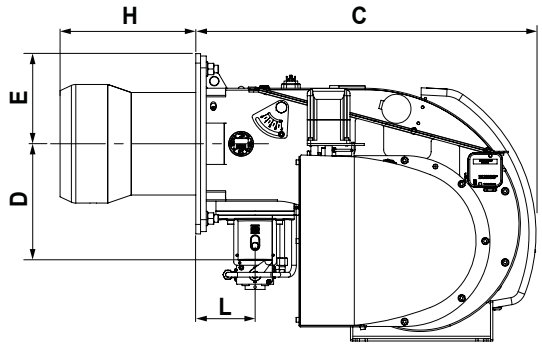

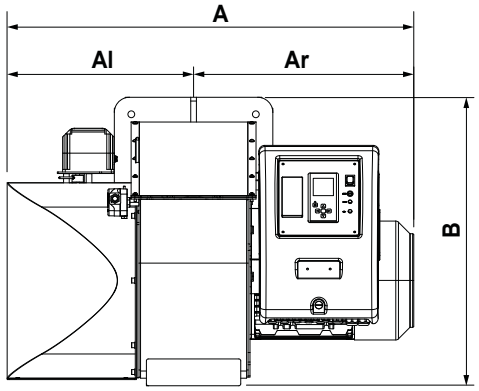

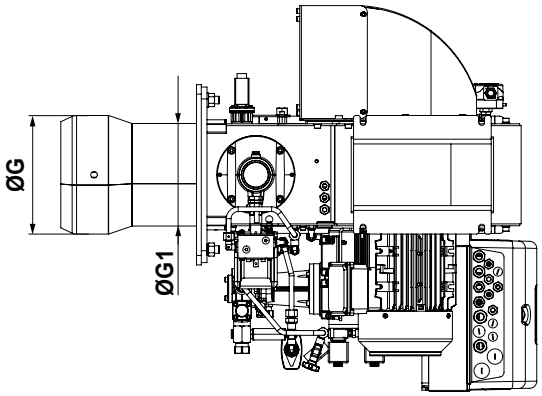

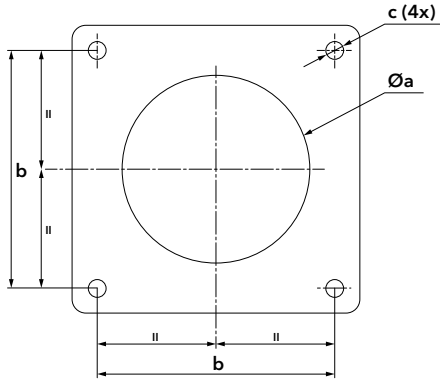

Model	A	Al	Ar	B	C	D	E	ØG	ØG1	H		L	Øa	b	c
										KN	KL				
EK-TRON 6.350	876	388	488	684	830	245	190	290	241	328	528	195	305-315	315	M16
EK-TRON 6.400	876	388	488	684	830	250	190	320	270	344	544	195	335-345	315	M16

PACKAGING

The burner is delivered on a pallet with:
- burner body and combustion head (to be mounted by the installer)
- gas train and filter
- boiler fixing accessories
- technical documentation

Nozzles not included,
to be added in case of order: see page 63

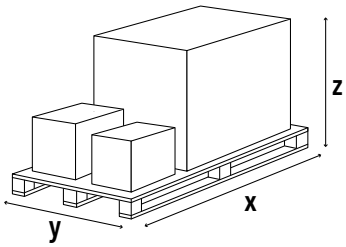

Model	Dimensions (mm)		
	X	Y	Z
EK-TRON 6.350	1100	900	720
EK-TRON 6.400	1100	900	720

EK-TRON 6 GL-EX2

600 ... 3900 kW
Two stage progressive/modulating electronic

PRESSURE LOSS [BURNER HEAD + GAS TRAIN] (mbar)

EK-TRON 6.350 GL-EX2

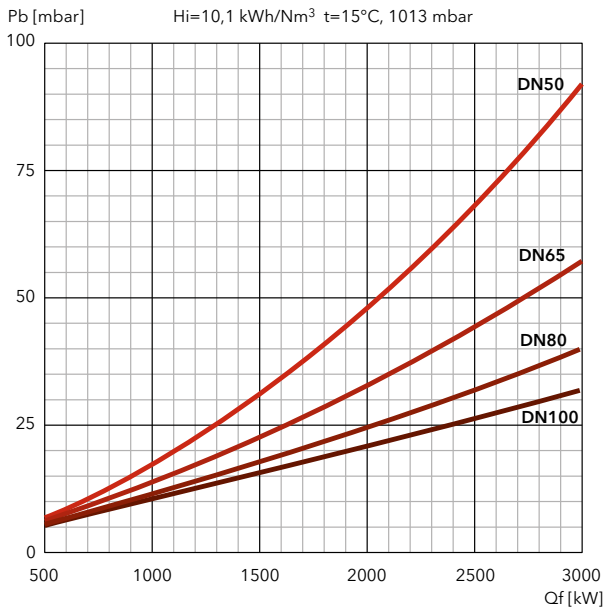

Each gas train must be installed with its own **connection pipe**, to be selected from the following table:

Gas train model	Code	Connection pipe
GT-S1-VGD20-RP50-PS2	3148683	3144686
GT-S1-VGD40-DN65-PS2	3148684	3148771
GT-S1-VGD40-DN80-PS2	3148685	3148772
GT-S1-VGD40-DN100-PS2	3148686	3148773
GT-D1-MBEVB-RP50-PS2	3148693	3144686
GT-D1-MBEVB-DN65-PS2	3148694	3148771
GT-D1-MBEVB-DN80-PS2	3148695	3148772
GT-D1-MBEVB-DN100-PS2	3148696	3148773

Dimensions of gas trains and connection pipes: see page 304

FILTERS

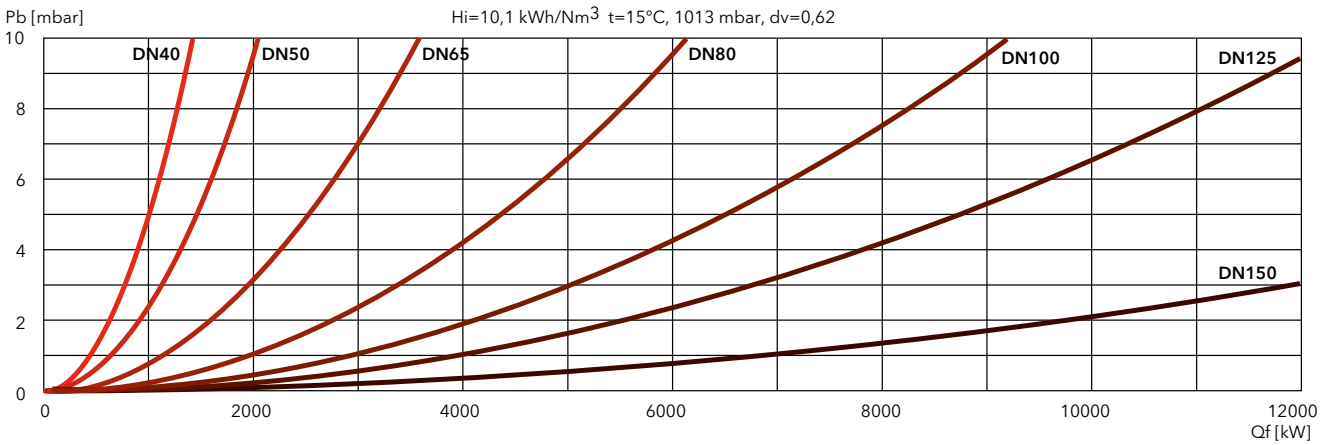

PRESSURE LOSS [BURNER HEAD + GAS TRAIN] (mbar)

EK-TRON 6.400 GL-EX2

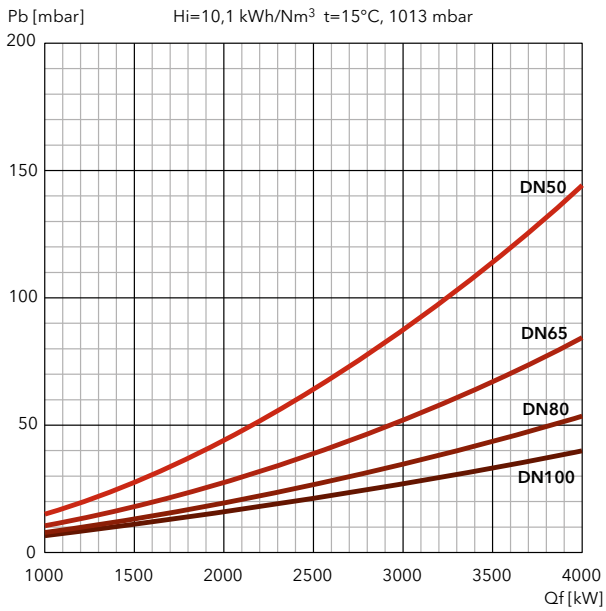

Each gas train must be installed with its own **connection pipe**, to be selected from the following table:

Gas train model	Code	Connection pipe
GT-S1-VGD20-RP50-PS2	3148683	3148770
GT-S1-VGD40-DN65-PS2	3148684	3148766
GT-S1-VGD40-DN80-PS2	3148685	3148767
GT-S1-VGD40-DN100-PS2	3148686	3148768
GT-D1-MBEVB-RP50-PS2	3148693	3148770
GT-D1-MBEVB-DN65-PS2	3148694	3148766
GT-D1-MBEVB-DN80-PS2	3148695	3148767
GT-D1-MBEVB-DN100-PS2	3148696	3148768

Dimensions of gas trains and connection pipes: see page 304

FILTERS

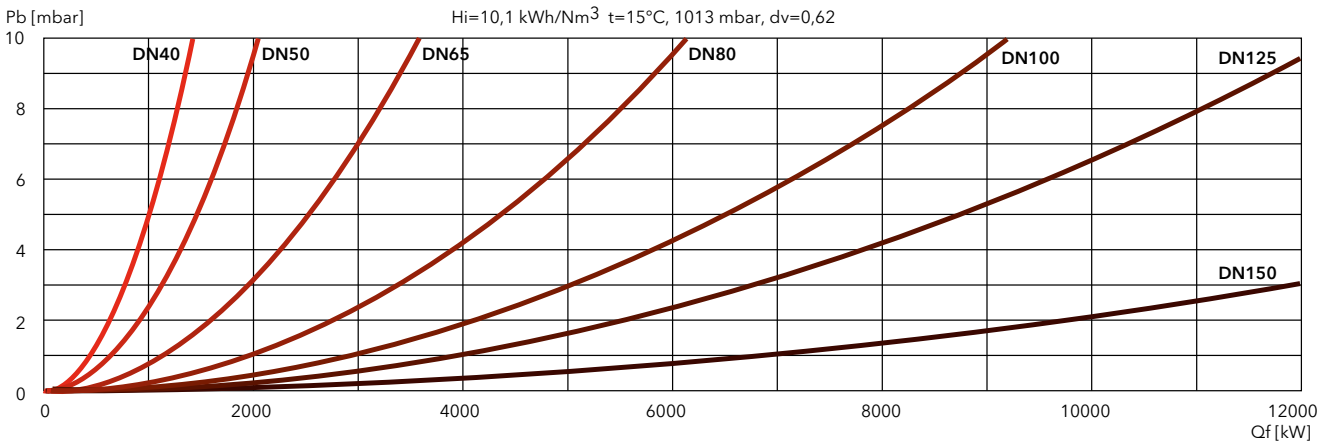

LCM MODULE

Module required for O_2 control, frequency converter and communication buses connections	**3147726**

COMMUNICATION MODULES

ModBus/BT3 (EBM100) to be mounted on the burner	**3147727**
ProfiBus/BT3 (PBM100) to be mounted on the burner	**3147728**

FREQUENCY CONVERTER FOR EXTERNAL INSTALLATION

IP55 with: • EMC filter • Inductor • Control panel	3 kW	**3757067**
	4 kW	**3757068**
	5,5 kW	**3757069**
	7,5 kW	**3757070**
	11 kW	**3757071**
	15 kW	**3757072**

POWER REGULATOR

Power regulator RWF55 stand-alone and kit wiring	**3147730**

PROBES

Temperature probe	Pt100, temperature range: –50° ... 400°C (100 mm) + pocket tube (76 mm)	**3750070**
Water probe	Temperature range: 0 ... 130°C	**3148819**
Steam probe	Pressure range: 0 ... 2 bar	**3148820**
	Pressure range: 0 ... 4 bar	**3148821**
	Pressure range: 0 ... 10 bar	**3148822**
	Pressure range: 0 ... 16 bar	**3148823**
	Pressure range: 0 ... 25 bar	**3148824**
	Pressure range: 0 ... 40 bar	**3148825**
Hot air / liquid probe	Temperature range: 0 ... 450°C	**3148826**
Thermocouple	J type, temperature up to 750°C	**3148827**

MAX GAS PRESSURE SWITCH

Kit supplied loose Note: this kit is not required for Dungs MBE gas trains, where it is already included	**3148675**

KIT LPG

Kit LPG for EK-TRON G-E and G-R	for EK-TRON 5.300	**3149283**
	for EK-TRON 6.350, 6.400 and 7.500	**3149268**
	for EK-TRON 7.600	**3149269**
Kit LPG for EK-TRON G-EF3 and G-RF3	for EK-TRON 5.300 and 6.350	**3149097**
	for EK-TRON 6.400	**3149098**
	for EK-TRON 7.500 and 7.600	**3149099**

OIL SPILL BACK NOZZLES

Fluidics W2 50° **Threaded connection, 7/8"**	40 kg/h	**3145231**
	50 kg/h	**3145232**
	60 kg/h	**3142763**
	70 kg/h	**3145233**
	80 kg/h	**3145234**
	90 kg/h	**3145235**
	100 kg/h	**3142704**
	115 kg/h	**3142564**
	130 kg/h	**3142515**
	145 kg/h	**3142516**
	160 kg/h	**3142421**
	180 kg/h	**3142492**
	200 kg/h	**3142690**
	225 kg/h	**3142489**
	250 kg/h	**3142768**
	275 kg/h	**3142805**
	300 kg/h	**3142490**
	330 kg/h	**3142703**
	360 kg/h	**3142513**
	400 kg/h	**3142497**
	450 kg/h	**3142483**
	500 kg/h	**3142699**
	550 kg/h	**3142416**
	600 kg/h	**3142506**

ACOUSTIC SHROUDS

• sound level reduction (sound pressure level): ca. 20 ... 30 dB(A) • sheet metal casing, structured coating, isolation with temperature resistant mineral wool • noise absorption material acc. DIN 4102, covered with a glass fibre layer, covered with perforated sheet metal, galvanised • easily disassembled into elements: base plate, side covers, top cover, air inlet section • all elements easily connected via quick locks • height of noise reduction casing adjustable on wheels • feed through for gas, oil and electrical connections integrated in side covers following the requirements • air inlet via noise reduction line • if required, an oil recuperation tub can be integrated on the base plate • for some boiler types a supporting frame for the casing may be necessary, due to the height of the burner tube over the floor Before submitting your order please provide information on the boiler model and the type of installation	**Codes on request**

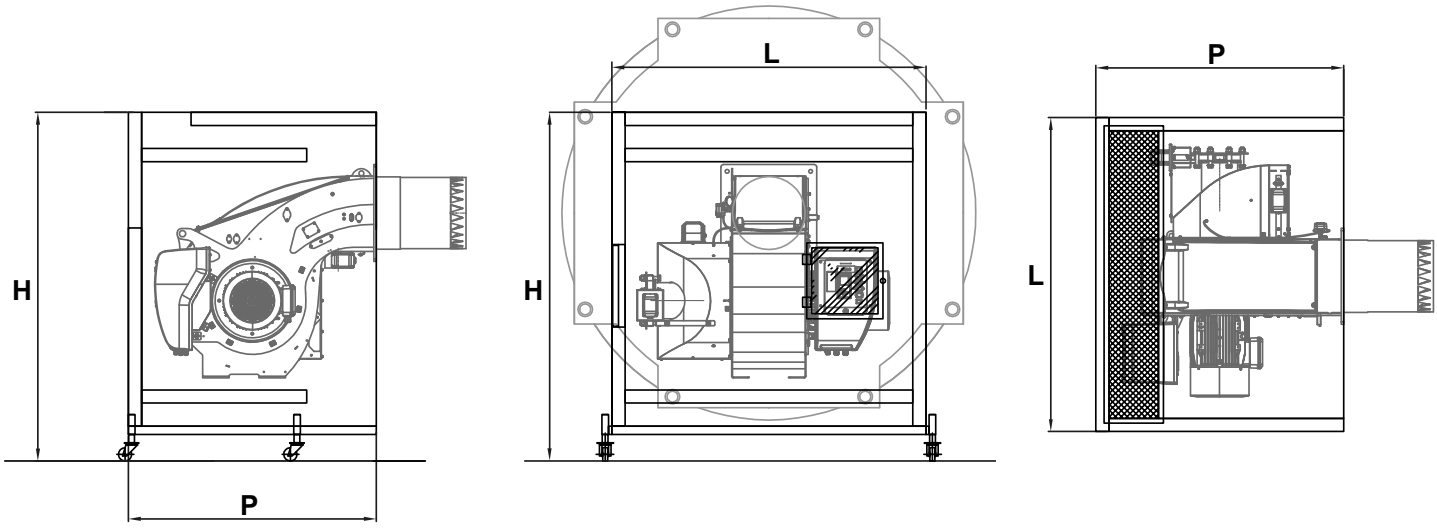

O_2 TRIM FOR BT300, ETAMATIC AND ETAMATIC OEM, FMS/VMS

This kit is used to optimize the combustion in order to keep the air excess as much stable as possible irrespective of the changes that can occur during operations, for instance slight calorific value variations, combustion air temperature and pressure. This improves the seasonal efficiency and therefore reduces the fuel consumption.

The kit includes the following components:
- Lambda transmitter LT3
- Lambda probe LS2
- Probe installation fitting (PIF)
- Gas extraction device (GED)

The control unit has to be installed close to the probe (max 10 m of cable)
The probe needs a calibration but no reference gas is necessary.
The display shows the O_2 content.
Maximum distance between the LT3 and the burner control panel is 500 m.

	Additional LSB modules installed at LT3	GED length	Code
Kit for O_2 trim (LT3 + LS2) **Flue temp max 300 °C – Display for O_2 visualization** (Note: for models equipped with BT3 this kit needs a LCM module installed in the burner control panel)	none	150 mm	**3759296**
		300 mm	**3759297**
		450 mm	**3759298**
	4x 0/4-20 mA output	150 mm	**3759299**
		300 mm	**3759300**
		450 mm	**3759301**
	4x 0/4-20 mA output + 4x digital output	150 mm	**3759302**
		300 mm	**3759303**
		450 mm	**3759304**

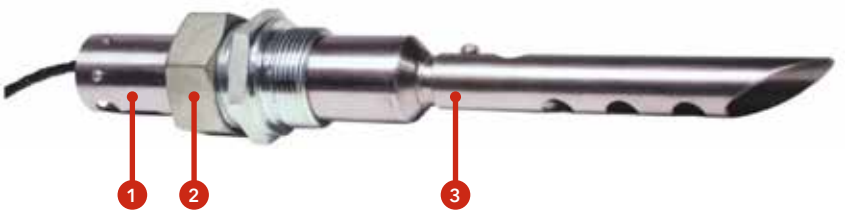

1. Lambda Probe LS2 in standard housing up to 300°C (572°F); default cable length is 2 m (6.5 ft), FEP, with connecting plug
2. Probe installation fitting (PIF)
3. Gas extraction device (GED)

The LS2 lambda probe is equipped with a 2 meter long connection cable that connects the sensor to the transmitter (LT3). It is possible to extend the connection up to a maximum distance of 10 meters (for greater lengths the conformity expires) with a ready-made cable and a probe connection box (PCB).

Description		Code
Extension for LS2	5m ready-made cable	**3759318**
	PCB (probe connection box)*	**3759319**

The PCB is a small terminal box that is connected to the 2 meter long cable already existing on the probe. The wiring between the PCB and the transmitter must be carried out on the construction site with suitable cables and trained personnel.

*: the PCB is mandatory if the end user chooses to use his own connecting cable and not one of those proposed (max total length remains 10m)

O_2/CO_e TRIM FOR BT300, ETAMATIC AND ETAMATIC OEM, FMS/VMS

This kit is used for optimizing the combustion in order to keep the air excess as low as possible in order to maximize the seasonal efficiency and therefore minimize the fuel consumption.
In addition to the features of the O_2 trim only, this kit reduces the air excess to its minimum because this system continuously measures the content of unburned fuel (CO_e) in the flue: should the air excess be reduced too much, the CO_e raises and the system reacts by increasing the air excess in order to keep firing in safe conditions.

The kit includes the following components:
- Lambda transmitter LT3-F
- Lambda probe KS1D
- Probe installation fitting (PIF)
- Gas extraction device (GED)

The control unit has to be installed close to the probe (max 10 m of cable).
The probe needs a calibration but no reference gas is necessary.
The display shows the O_2 and CO_e content.
Maximum distance between the LT3-F and the burner control panel is 500 m.

	Additional LSB modules installed at LT3-F	GED length	Code
Kit for O_2 trim and CO control (LT3-F + KS1D) **Flue temp max 300 °C** (Note: for models equipped with BT3 this kit needs a LCM module installed in the burner control panel)	none	150 mm	**3759305**
		300 mm	**3759306**
		450 mm	**3759307**
	4x 0/4-20 mA output	150 mm	**3759308**
		300 mm	**3759309**
		450 mm	**3759310**
	4x 0/4-20 mA output + 4x digital output	150 mm	**3759311**
		300 mm	**3759312**
		450 mm	**3759313**

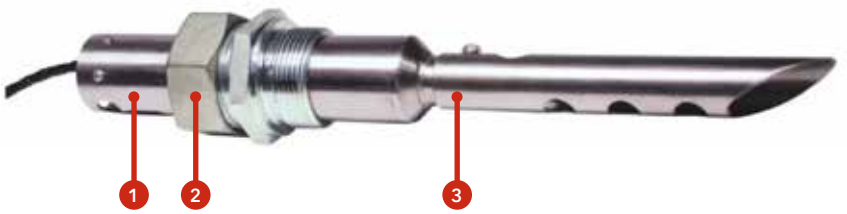

1. Lambda Probe KS1D in standard housing up to 300°C (572°F); default cable length is 2 m (6.5 ft), FEP, with connecting plug
2. Probe installation fitting (PIF)
3. Gas extraction device (GED)

The KS1D lambda probe is equipped with a 2 meter long connection cable that connects the sensor to the transmitter (LT3-F). It is possible to extend the connection up to a maximum distance of 10 meters (for greater lengths the conformity expires) with a ready-made cable and a probe connection box (PCB).

Description		Code
Extension for KS1D	5m ready-made cable	**3759318**
	PCB (probe connection box)*	**3759319**

The PCB is a small terminal box that is connected to the 2 meter long cable already existing on the probe. The wiring between the PCB and the transmitter must be carried out on the construction site with suitable cables and trained personnel.

*: the PCB is mandatory if the end user chooses to use his own connecting cable and not one of those proposed (max total length remains 10m)

EK EVO

MONOBLOCK BURNERS
FROM 250 TO 13500 kW
GAS, LIGHT OIL AND DUAL FUEL

ROBUST AND WELL ENGINEERED DESIGN

The design of the EK EVO is the result of a successful synergy between ELCO key features and essential design.
EK EVO introduces a brand new aluminium body casing, enhancing the visual choice of ELCO.
Professionals will appreciate the flexibility of a 180° orientable air inlet, the compact switch box and the easy to clean glossy paint.

A TOTAL ADVANTAGE IN TERMS OF FLEXIBILITY AND EASE OF USE

The EK EVO are characterised by their total flexibility of installation; they have been designed to be installed in different ways: up-firing, down-firing, upside-down or side-to-side (twin chamber boilers).
All EK EVO models are fully electronically controlled and equipped with the exclusive ELCO interface allowing simple and effective communication between burner and technician.

SMART SOLUTIONS FOR EASY MAINTENANCE

The maintenance of the EK EVO burners can comfortably be carried out thanks to a wide opening above the housing, allowing easy access to the combustion components, and thanks to the choice of the material: aluminium, lightweight to handle and resistant at the same time.
Maintenance operations are possible without disturbing the burner head and setting.

ULTRA LOW NOx VERSION WITH AND WITHOUT FGR SYSTEM

ELCO implements the internal and external flue gas recirculation technology to reduce pollutant emissions and satisfy even the most stringent regulations. This technology allows ELCO to guarantee emissions well below 60 mg/kWh with its EK EVO class 4 models equipped with the new Blue Triple Head, and below 30 mg/kWh with the implementation of the FGR System.

RANGE OVERVIEW

/ GAS RANGE
340 / 13500 kW

/ DUAL FUEL RANGE
250 / 10620 kW

/ LIGHT OIL RANGE
360 / 10620 kW

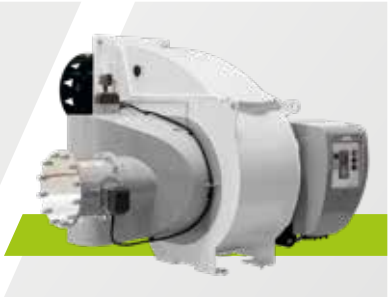

/ LOW NOx / ULTRA LOW NOx
up to 13500 kW

MAIN TECHNICAL FEATURES

- Two stage progressive/modulating forced draught burner
- Fuels:
  - natural gas, Hi = 6,99 … 11,39 kWh/Nm^3
  - LPG, Hi = 25,89 kWh/Nm^3
  - light oil, viscosity 6 mm^2/s at 20°C, Hi = 11,86 kWh/kg
- Combustion technology:
  - Low NOx class 4 (≤60 mg/kWh), class 3 (≤80 mg/kWh) and class 2 (≤120 mg/kWh) in gas operation, acccording to EN676
  - Low NOx class 3 (≤120 mg/kWh) and class 2 (≤185 mg/kWh) in light oil operation, according to EN267
  - Models equipped with FGR System to reach NOx emission values below 30 mg/kWh
- Integrated switch cabinet (ISC System) with modular concept complete for an easy installation with:
  - BT300 control box
  - fan motor direct start-up
  - enumerated connection terminals
  - three-phase electrical power supply
  - available as options: power regulator, speed controller, O_2/CO regulator and BUS interface
- Innovative design allowing easy access to burner components for fast start-up and reduced maintenance time and space
- Orientable air intake box
- Secured burner head adjustments during maintenance (RTC System)
- Closing of the air damper on burner shut-down
- Multiple gas train matching according to the inlet gas pressure
- Gas train factory assembled and tested for tightness and electrical security
- Products are in compliance with EN676 and EN267 European standards and with the following directives:
  - 2014/35/UE Low Voltage Directive
  - 2014/30/UE EMC Directive
  - 2016/426/UE Gas Appliances Regulation
  - 2006/42/EC Machinery Directive
  - 2011/65/EU RoHS2 Directive

PRODUCT LIST

	Gas	Dual fuel	Light oil
EK EVO 6.2200	●		
EK EVO 6.2400	● ○	● ○	● ○
EK EVO 6.2900	● ○	● ○	● ○
EK EVO 7.3400	●		
EK EVO 7.3600	● ○	● ○	● ○
EK EVO 7.4000	◐		
EK EVO 7.4500	● ○	● ○	● ○
EK EVO 7.5800	●		
EK EVO 7.7000	●		
EK EVO 8.5700		●	●
EK EVO 8.5800	● ○	○	○
EK EVO 8.6600	◐		
EK EVO 8.7100	● ○	○	○
EK EVO 9.6500		●	●
EK EVO 9.7200	◐ ●		
EK EVO 9.7500	●		
EK EVO 9.8700	● ○	● ○	● ○
EK EVO 9.9400	◐		
EK EVO 9.10400	● ○	● ○	● ○
EK EVO 9.11300	◐		
EK EVO 9.13000	●		

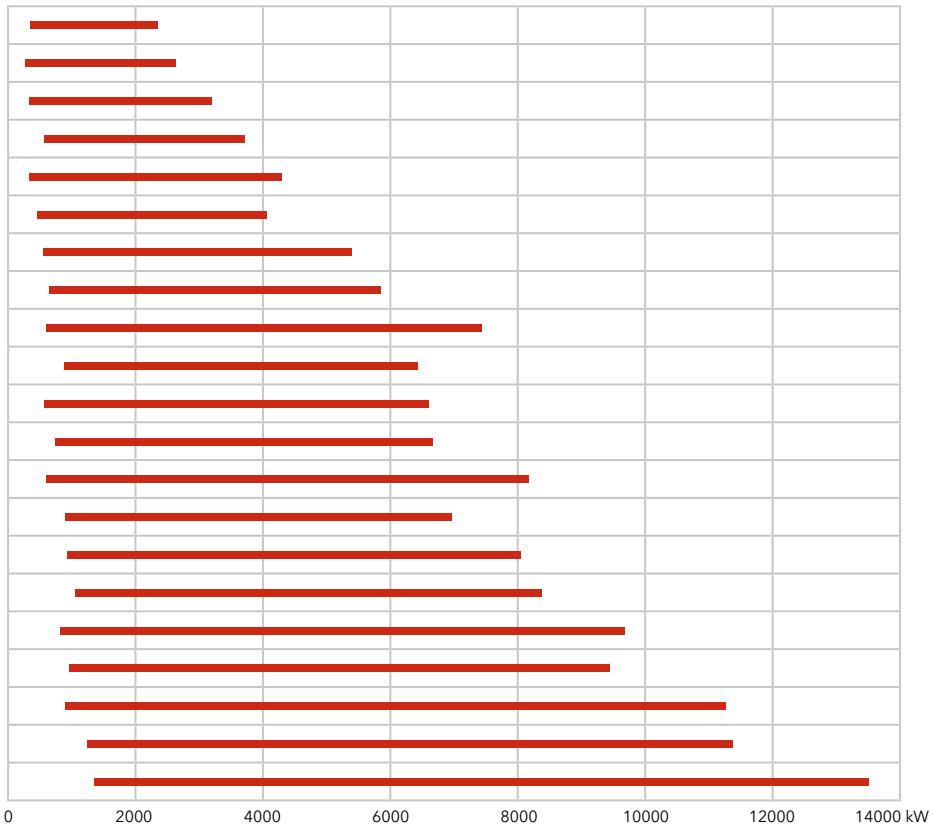

● Class 4 ● Class 3 ○ Class 2

EK EVO

GAS

ULTRA Low NOx

EK EVO 7 G-EFX / EK EVO 8 G-EFX

440 … 6610 kW
Two stage progressive/modulating electronic

NOx <50 mg/kWh

- **Fuels:** natural gas, Hi = 6,99 … 11,39 kWh/Nm³;
  LPG, Hi = 25,89 kWh/Nm³
- **Emission class:** Low NOx class 4 (≤60 mg/kWh) according to EN676
- **Protection level:** IP 41

TECHNICAL DATA

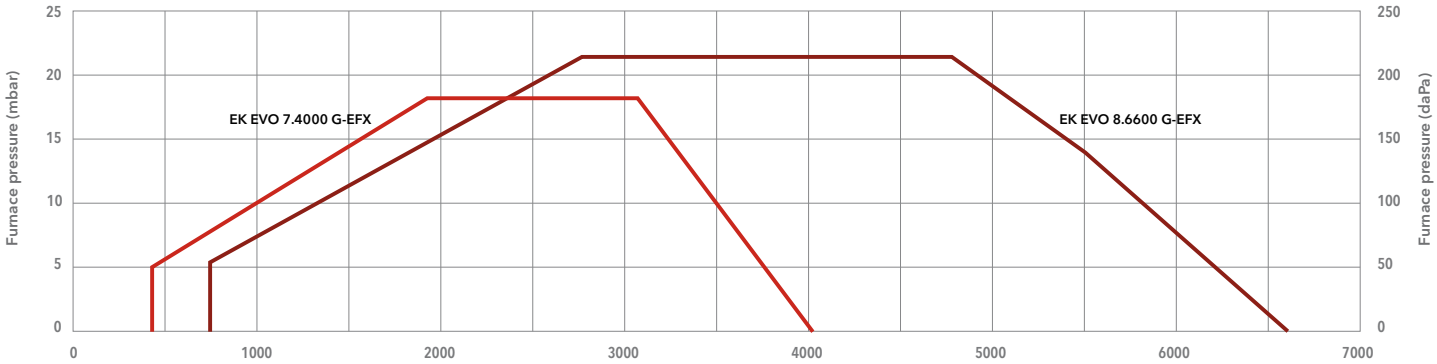

Test conditions conforming to EN676 - Temperature: 20°C - Pressure: 1013,5 mbar - Altitude: 0 m a.s.l.

		EK EVO 7.4000 G-EFX	EK EVO 8.6600 G-EFX
Operating range		440 – 4040 kW	730 – 6610 kW
Gas pressure		100 – 500 mbar (100 – 360 mbar for d705)	135 – 500 mbar
Gas connection		DN65	DN100
Control box / flame detector		BT300 / KLC	BT300 / KLC
Auxiliary voltage		1NPE AC 230 V – 50 Hz TN-S	1NPE AC 230 V – 50 Hz TN-S
Power supply		3PE AC 400 V – 50 Hz	3PE AC 400 V – 50 Hz
Fan motor		50 Hz – 7,5 kW	50 Hz – 15 kW
Acoustic level		<80,6 dB(A)	<87,6 dB(A)
CE certificate		0085CL0215	0085CL0215
Burner codes (body + head)	KN	**3759493**	**3759813**
	KM	**3759494**	**3759814**
	KL	**3759495**	**3759815**

GAS TRAINS

DUNGS

Models for EK EVO 7	Code
GT-d705-2" (*)	3759628
GT-d701-65	3759625
GT-d702-80	3759626
GT-d703-100	3759627

Models for EK EVO 8	Code
GT-d901-65	3759630
GT-d902-80	3759631
GT-d903-100	3759632

*: integrated filter

SIEMENS

Model for EK EVO 7	Code
GT-s705-2"	3759284
GT-s701-65	3759280
GT-s702-80	3759281
GT-s703-100	3759282
GT-s704-125	3759283

Models for EK EVO 8	Code
GT-s901-65	3759286
GT-s902-80	3759287
GT-s903-100	3759288
GT-s904-125	3759289

FILTERS

Model	Code
FG-Rp2"	3757200
FG-DN65	3757198
FG-DN80	3757201
FG-DN100	3757195
FG-DN125	3757209

i **Pressure drops graphs**: see following pages
Dimensions of gas trains and gas filters: see page 308

DIMENSIONS (mm)

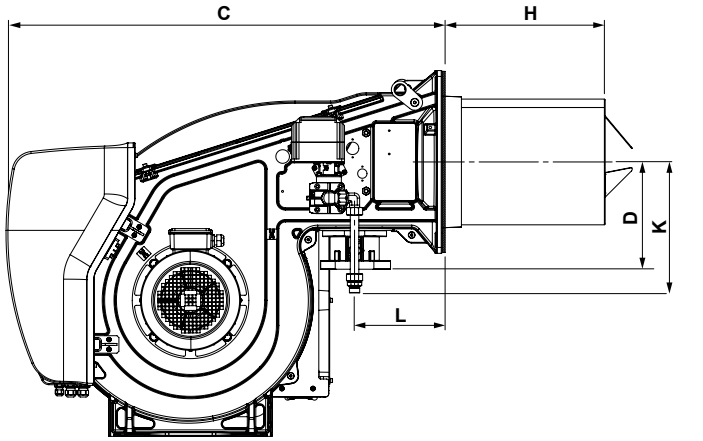

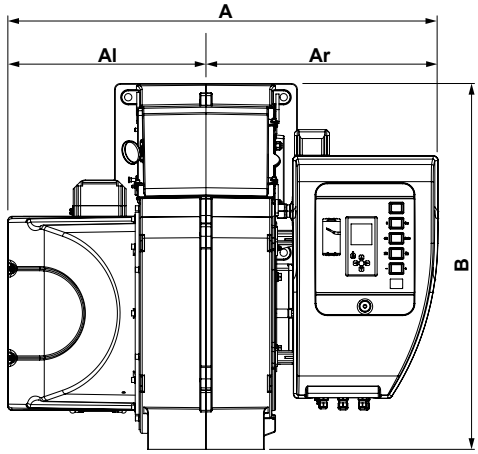

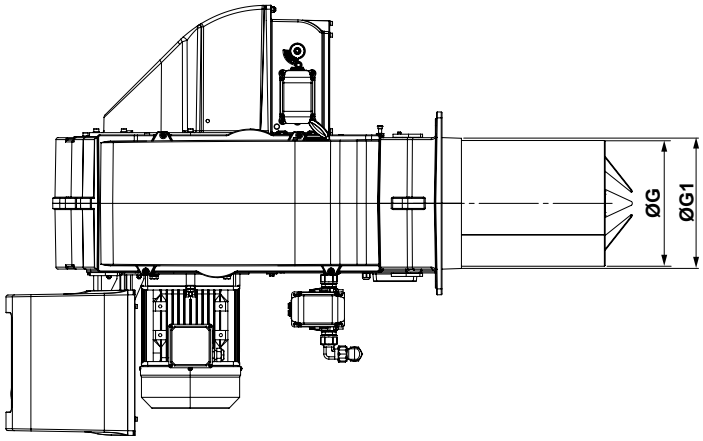

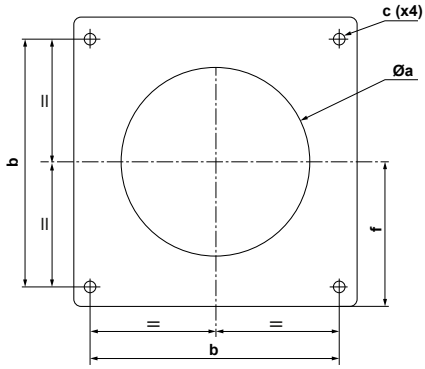

Model	A	Al	Ar	B	C	D	E	ØG	ØG1	H			K	L	Øa	b	c	f
										KN	KM	KL						
EK EVO 7.4000	1107	510	597	941	1130	276	235	325	338	420	550	680	320	233	360-400	400	M16	235
EK EVO 8.6600	1323	670	653	1231	1352	307	293	369	376	575	725	875	377*/366**	230	380-410	505	M20	293

*: applies to gas connectors DN100/65 and DN100/85
**: applies to gas connectors DN100/100 and DN100/125

PACKAGING

The burner is delivered on a pallet with:
- burner body with mounted combustion head
- gas train and filter
- boiler fixing accessories
- technical documentation

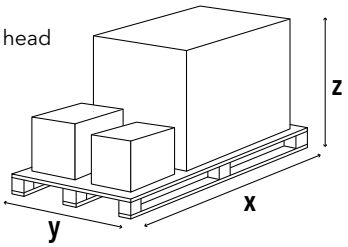

Model	Dimensions (mm)			Gross weight (kg)
	X	Y	Z	
EK EVO 7.4000	2046	1414	1233	350
EK EVO 8.6600	2300	1500	1573	580

EK EVO 7 G-EFX / EK EVO 8 G-EFX

440 ... 6610 kW
Two stage progressive/modulating electronic

PRESSURE LOSS [BURNER HEAD + GAS TRAIN] (mbar)

EK EVO 7.4000 G-EFX

DUNGS

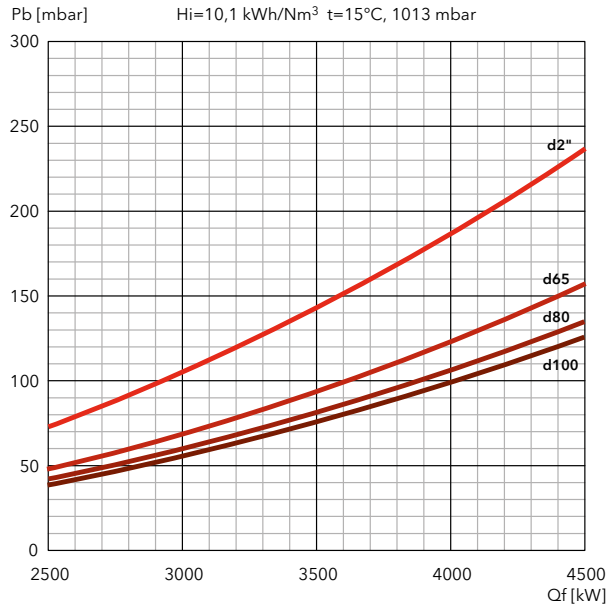

SIEMENS

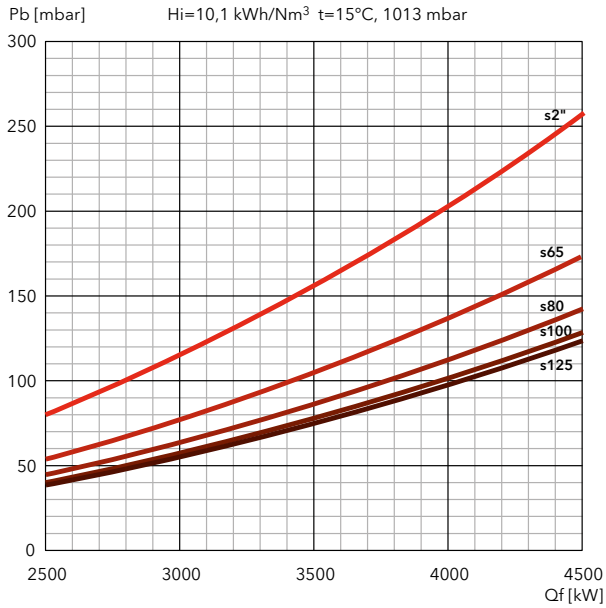

FILTERS

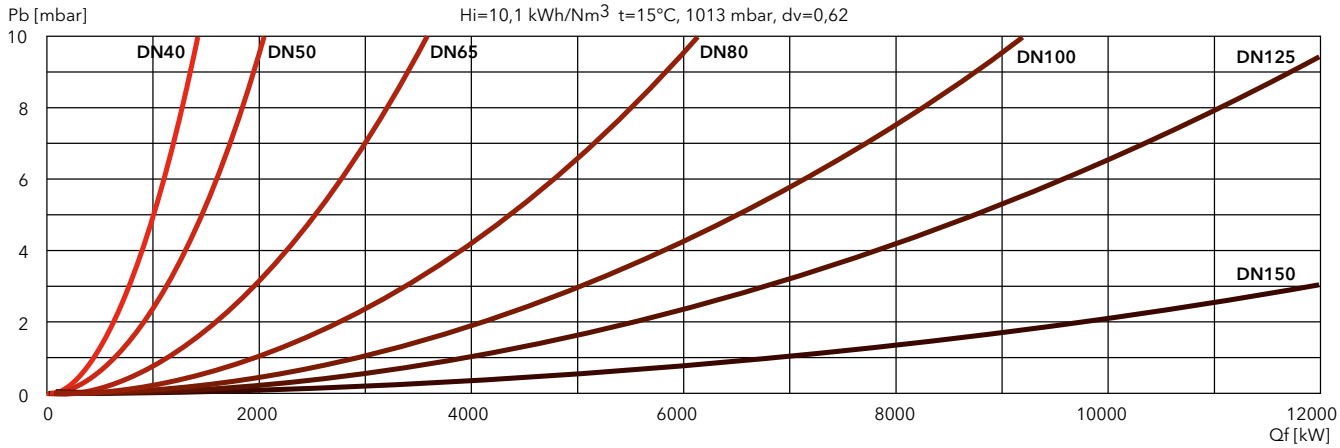

PRESSURE LOSS [BURNER HEAD + GAS TRAIN] (mbar)

EK EVO 8.6600 G-EFX

DUNGS

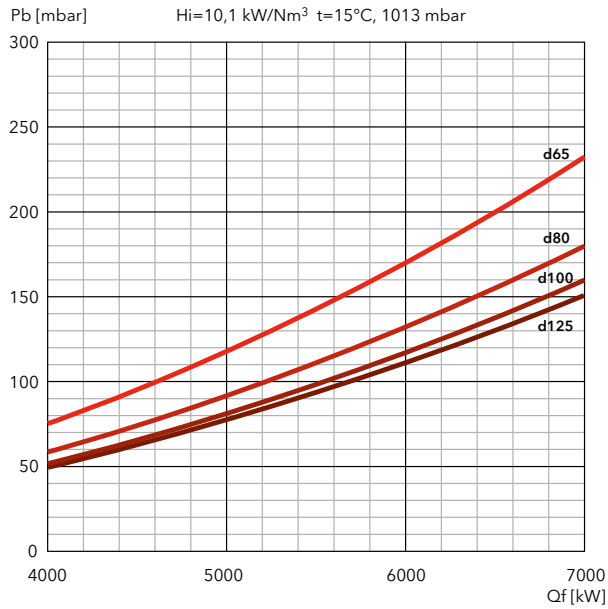

SIEMENS

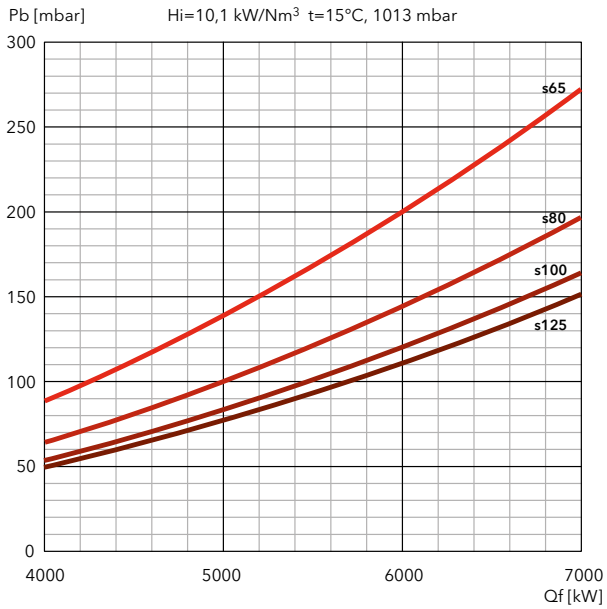

FILTERS

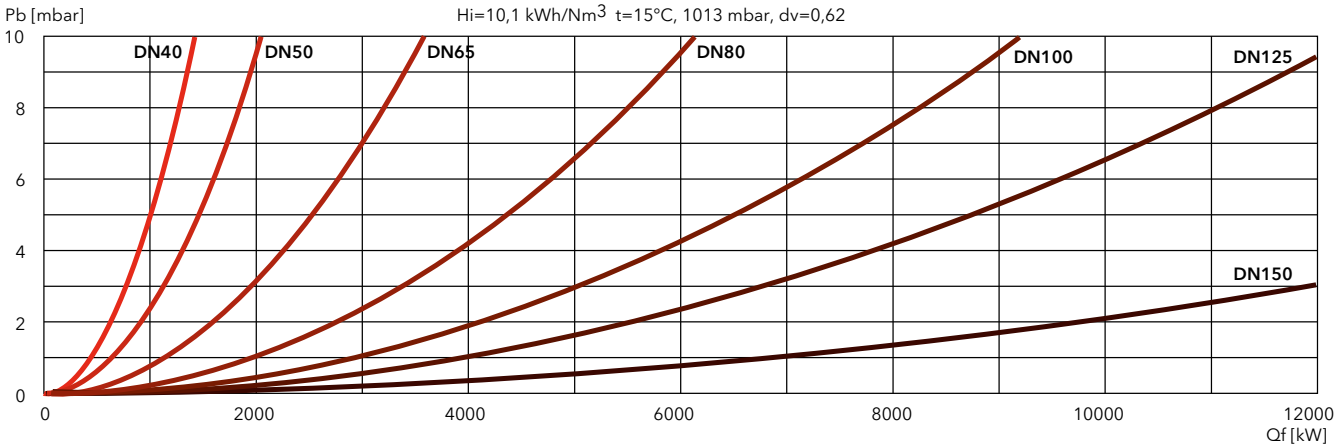

EK EVO

GAS

ULTRA Low NOx

EK EVO 9 G-EFX

890 … 11350 kW
Two stage progressive/modulating electronic

NOx <50 mg/kWh

- **Fuels:** natural gas, Hi = 6,99 … 11,39 kWh/Nm³;
  LPG, Hi = 25,89 kWh/Nm³
- **Emission class:** Low NOx class 4 (≤60 mg/kWh) according to EN676
- **Protection level:** IP 41

TECHNICAL DATA

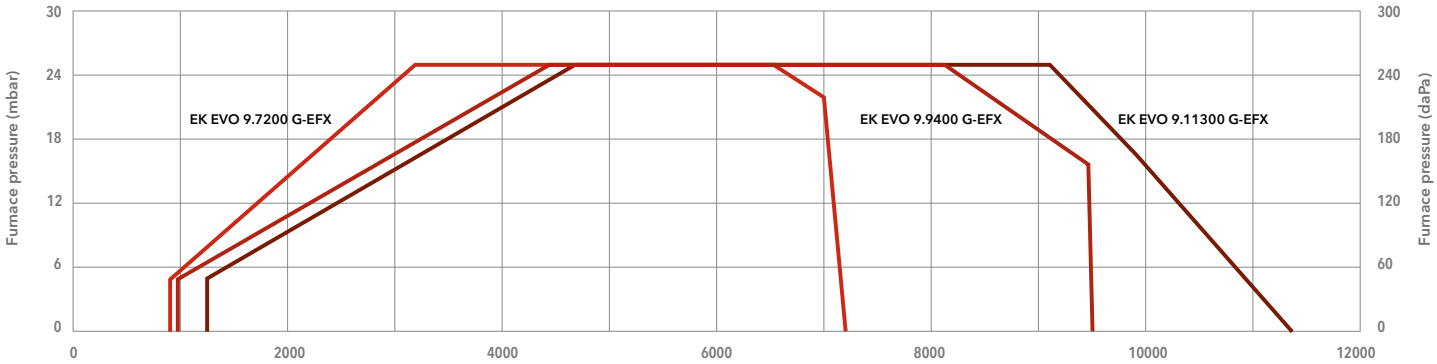

Test conditions conforming to EN676 - Temperature: 20°C - Pressure: 1013,5 mbar - Altitude: 0 m a.s.l.

Power (kW)

		EK EVO 9.7200 G-EFX	EK EVO 9.9400 G-EFX	EK EVO 9.11300 G-EFX
Operating range		890 – 7200 kW	980 – 9440 kW	1250 – 11350 kW
Gas pressure		150 – 500 mbar	175 – 500 mbar	155 – 500 mbar
Gas connection		DN100	DN100	DN100
Control box / flame detector		BT300 / KLC	BT300 / KLC	BT300 / KLC
Auxiliary voltage		1NPE AC 230 V – 50 Hz TN-S	1NPE AC 230 V – 50 Hz TN-S	1NPE AC 230 V – 50 Hz TN-S
Power supply		3PE AC 400 V – 50 Hz	3PE AC 400 V – 50 Hz	3PE AC 400 V – 50 Hz
Fan motor		50 Hz – 22 kW	50 Hz – 22 kW	50 Hz – 37 kW
Acoustic level		<84,4 dB(A)	<87,2 dB(A)	<88,6 dB(A)
CE certificate		0085CL0215	0085CL0215	0085CL0215
Burner codes (body + head)	KN	**3760498**	**3760738**	**3761544**
	KM	**3760499**	**3760739**	**3761545**
	KL	**3760500**	**3760740**	**3761546**

GAS TRAINS

DUNGS

Model	Code
GT-d901-65	3759630
GT-d902-80	3759631
GT-d903-100	3759632

SIEMENS

Model	Code
GT-s901-65	3759286
GT-s902-80	3759287
GT-s903-100	3759288
GT-s904-125	3759289

FILTERS

Model	Code
FG-DN65	3757198
FG-DN80	3757201
FG-DN100	3757195
FG-DN125	3757209

i **Pressure drops graphs**: see following pages
Dimensions of gas trains and gas filters: see page 309

DIMENSIONS (mm)

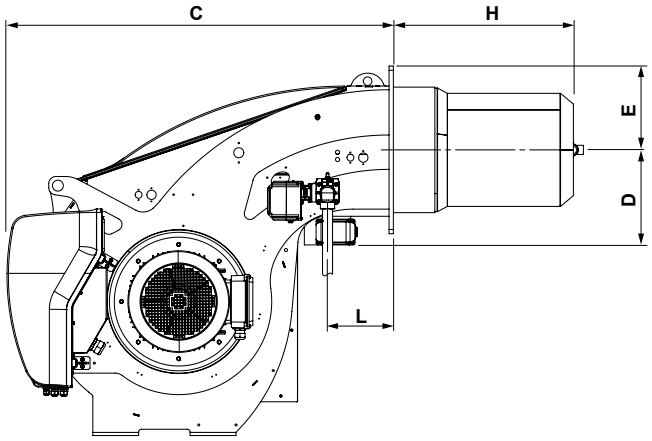

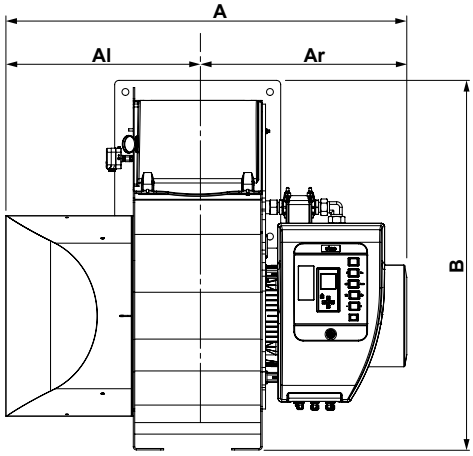

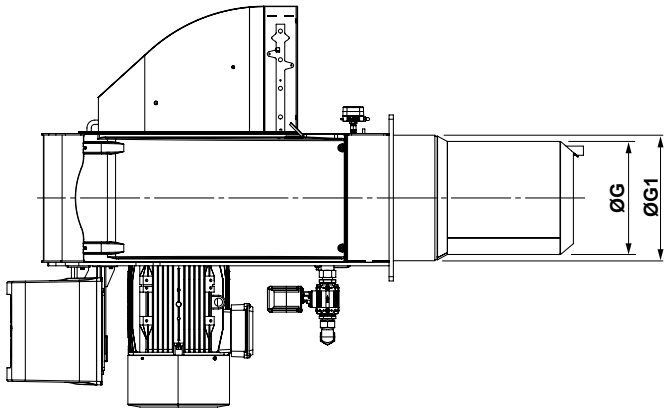

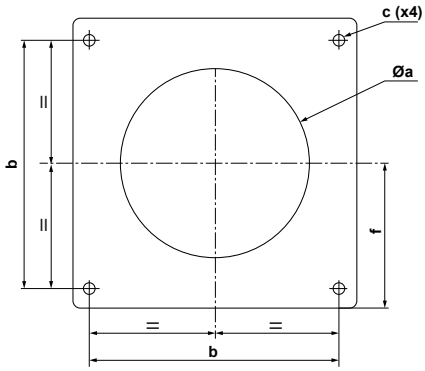

Model	A	Al	Ar	B	C	D	E	ØG	ØG1	H			L	Øa	b	c	f
										KN	KM	KL					
EK EVO 9.7200	1400	670	730	1291	1350	332	293	385	438,5	649	799	949	230	460-480	505	M20	293
EK EVO 9.9400	1400	670	730	1291	1350	332	293	395	438,5	629	779	929	230	460-480	505	M20	293
EK EVO 9.11300	1462	674	788	1291	1350	332	293	395	438,5	629	779	929	230	460-480	505	M20	293

PACKAGING

The burner is delivered on a pallet with:
- burner body with mounted combustion head
- gas train and filter
- boiler fixing accessories
- technical documentation

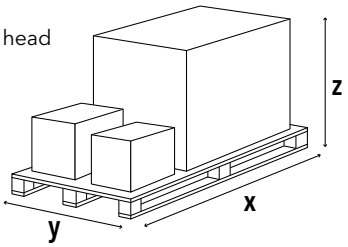

Model	Dimensions (mm)			Gross weight (kg)
	X	Y	Z	
EK EVO 9.7200	2300	1500	1573	580
EK EVO 9.9400	2300	1500	1573	700
EK EVO 9.11300	2300	1500	1573	700

EK EVO 9 G-EFX

890 ... 11350 kW
Two stage progressive/modulating electronic

PRESSURE LOSS [BURNER HEAD + GAS TRAIN] (mbar)

EK EVO 9.7200 G-EFX

DUNGS

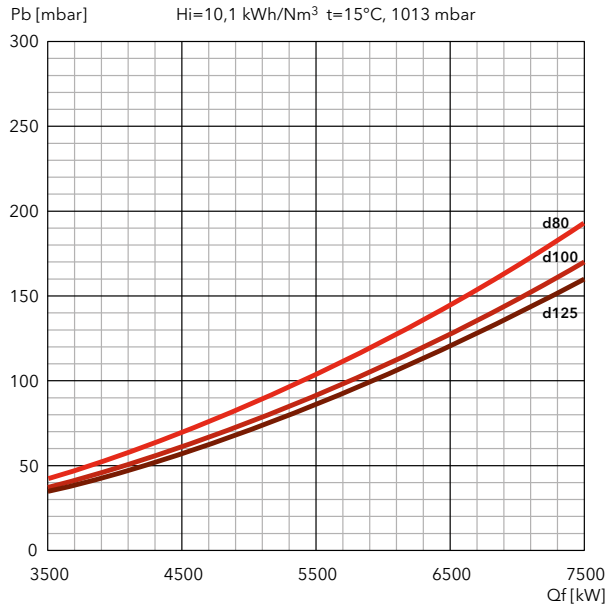

SIEMENS

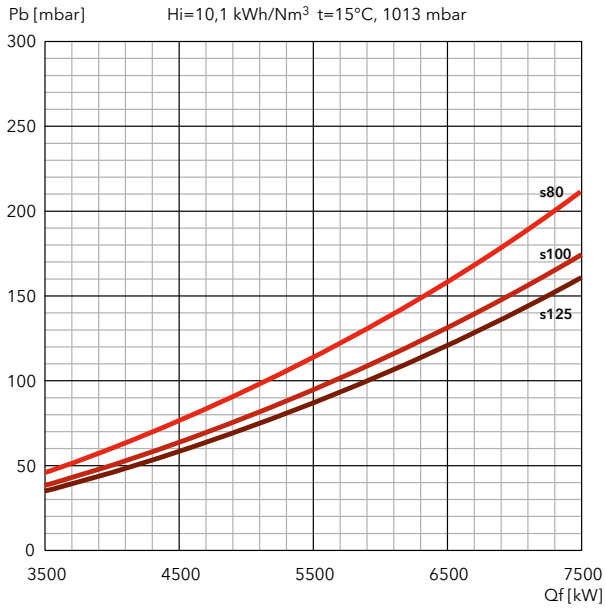

EK EVO 9.9400 G-EFX

DUNGS

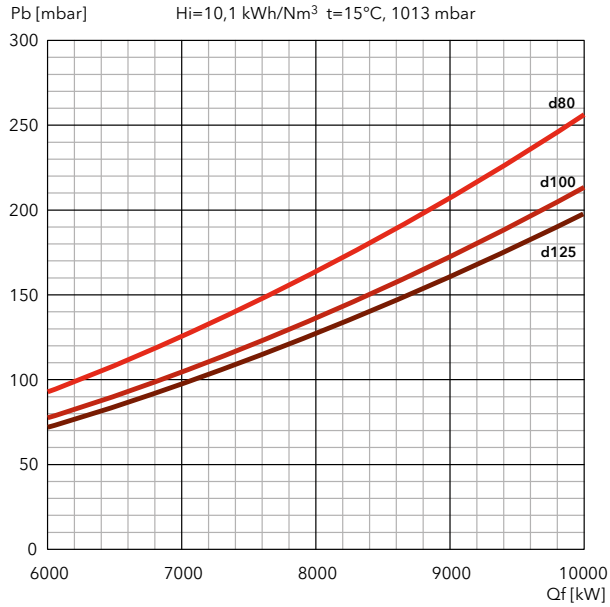

SIEMENS

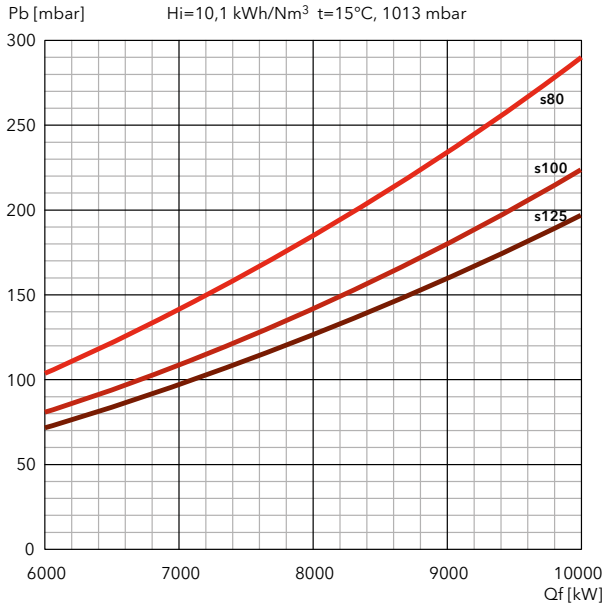

FILTERS

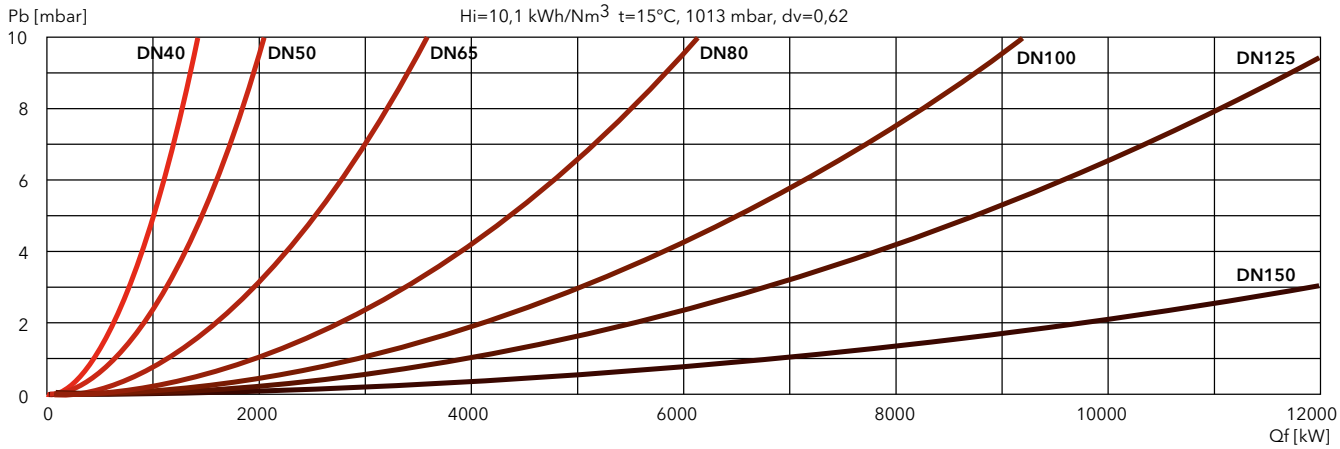

PRESSURE LOSS [BURNER HEAD + GAS TRAIN] (mbar)

EK EVO 9.11300 G-EFX

DUNGS

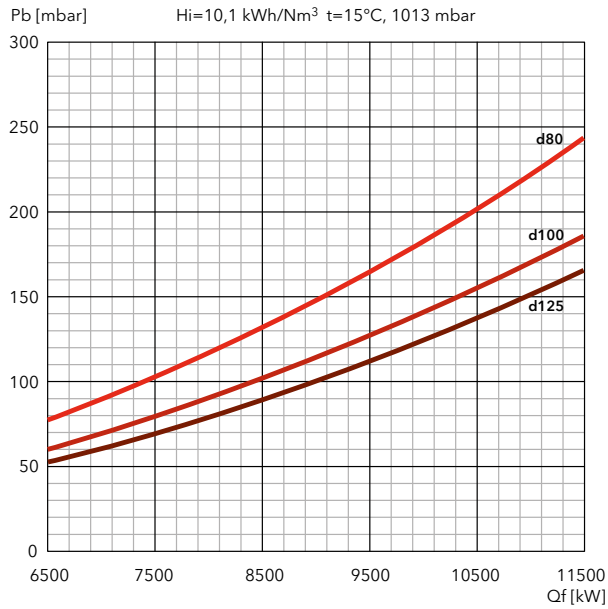

SIEMENS

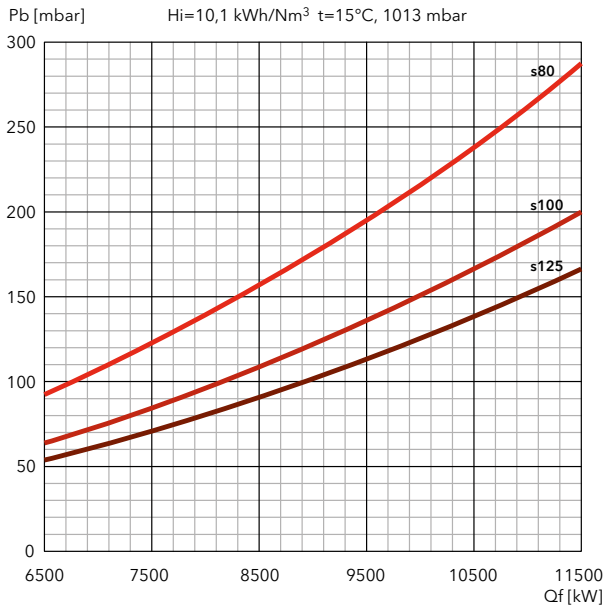

FILTERS

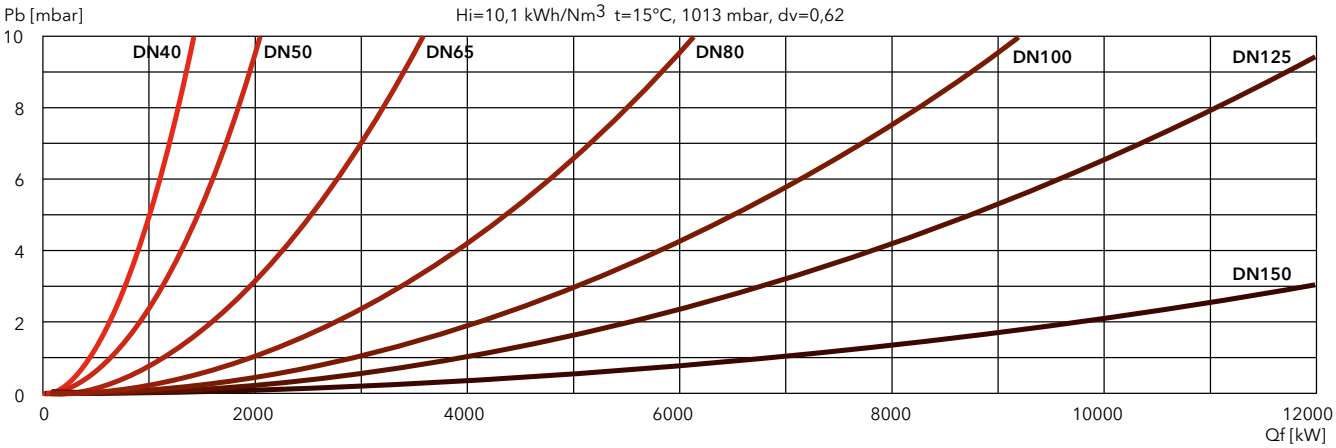

EK EVO

GAS

Low NOx Class 3

EK EVO 6 G-EF3

340 … 2900 kW
Two stage progressive/modulating electronic

- **Fuels:** natural gas, Hi = 6,99 … 11,39 kWh/Nm³;
  LPG, Hi = 25,89 kWh/Nm³
- **Emission class:** Low NOx class 3 (≤80 mg/kWh) according to EN676
- **Protection level:** IP 41

TECHNICAL DATA

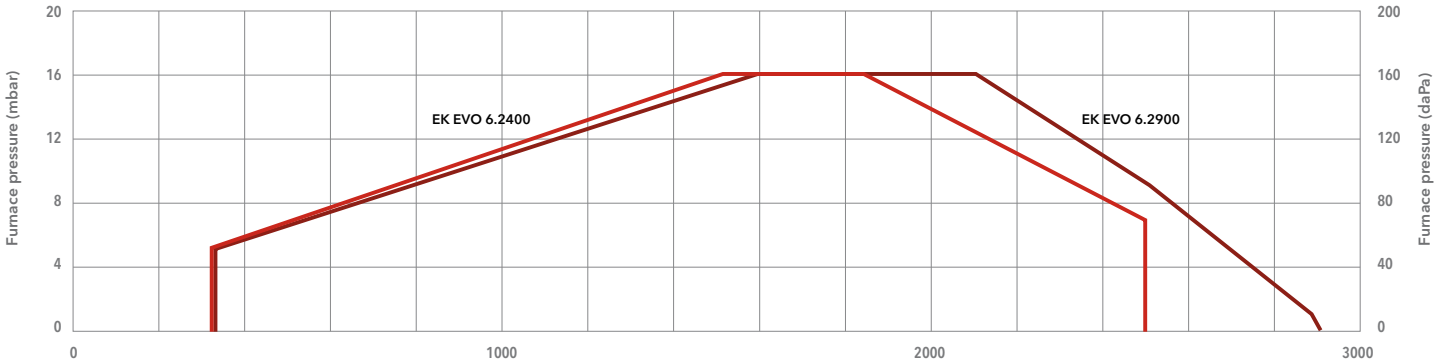

Test conditions conforming to EN676 - Temperature: 20°C - Pressure: 1013,5 mbar - Altitude: 0 m a.s.l.

Power (kW)

		EK EVO 6.2400 G-EF3	EK EVO 6.2900 G-EF3
Operating range		340 – 2500 kW	340 – 2900 kW
Gas pressure		50 – 500 mbar (50 – 360 mbar for d452 and d453)	50 – 500 mbar (50 – 360 mbar for d452 and d453)
Gas connection		DN65	DN65
Control box / flame detector		BT300 / QRA2	BT300 / QRA2
Auxiliary voltage		1NPE AC 230 V – 50 Hz TN-S	1NPE AC 230 V – 50 Hz TN-S
Power supply		3PE AC 400 V – 50 Hz	3PE AC 400 V – 50 Hz
Fan motor		50 Hz – 3 kW	50 Hz – 4 kW
Acoustic level		<74 dB(A)	<77 dB(A)
CE certificate		0085CL0215	0085CL0215
Burner codes (body + head)	KN	**3754046**	**3754047**
	KM	**3754050**	**3754051**
	KL	**3754054**	**3754055**

GAS TRAINS

DUNGS

Model	Code
GT-d452-1"1/2 (*)	3750510
GT-d453-2" (*)	3750511
GT-d454-65	3750512
GT-d455-80	3750513

*: integrated filter

SIEMENS

Model	Code
GT-s451-1"1/2	3750525
GT-s452-2"	3750526
GT-s453-65	3750527
GT-s454-80	3750528
GT-s455-100	3750529

FILTERS

Model	Code
FG-Rp1"1/2	3757199
FG-Rp2"	3757200
FG-DN65	3757198
FG-DN80	3757201
FG-DN100	3757195

i **Pressure drops graphs**: see following pages
Dimensions of gas trains and gas filters: see page 310

DIMENSIONS (mm)

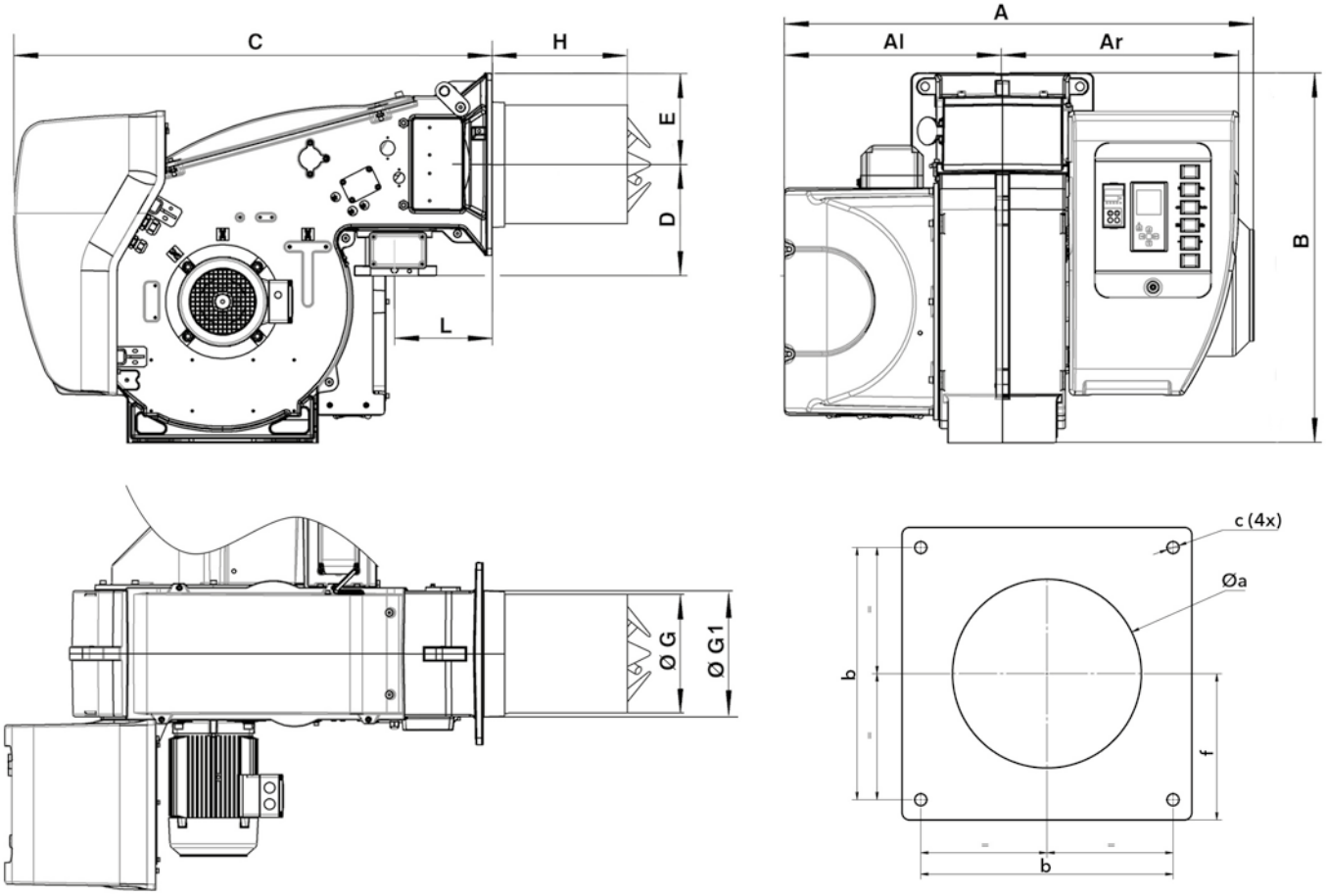

Model	A	Al	Ar	B	C	D	E	ØG	ØG1	H			L	Øa	b	c	f
										KN	KM	KL					
EK EVO 6... G-EF3	1035	509	556	812	1046	245	200	263	277	400	520	640	215	300-340	340	M16	200

PACKAGING

The burner is delivered on a pallet with:
- burner body with mounted combustion head
- gas train and filter
- boiler fixing accessories
- technical documentation

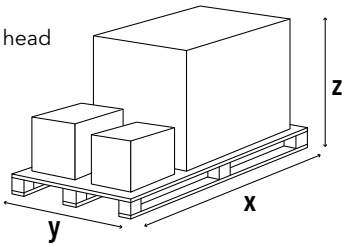

Model	Dimensions (mm)			Gross weight (kg)
	X	Y	Z	
EK EVO 6.2400 G-EF3	2046	1414	1233	300
EK EVO 6.2900 G-EF3	2046	1414	1233	300

EK EVO 6 G-EF3

340 ... 2900 kW
Two stage progressive/modulating electronic

PRESSURE LOSS [BURNER HEAD + GAS TRAIN] (mbar)

EK EVO 6.2400 G-EF3

DUNGS

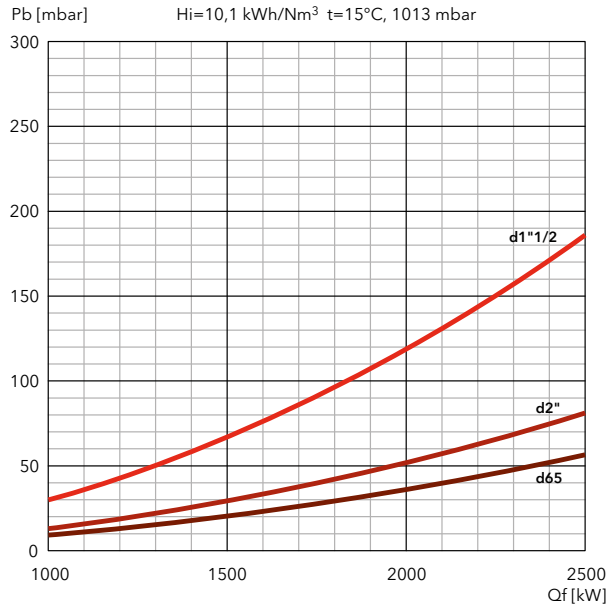

SIEMENS

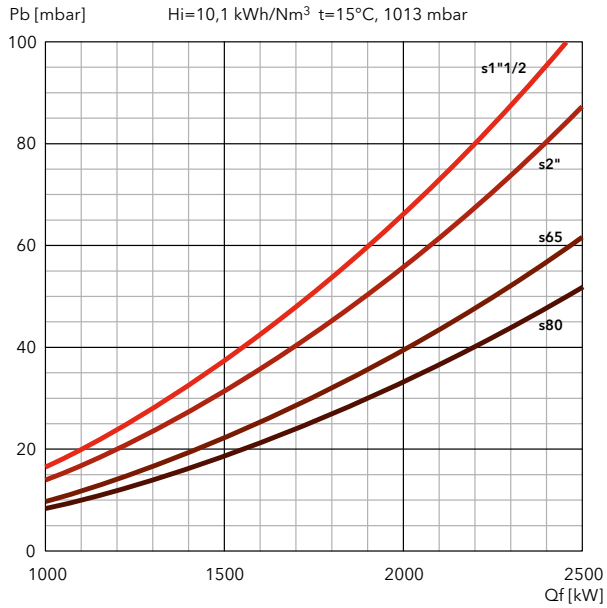

FILTERS

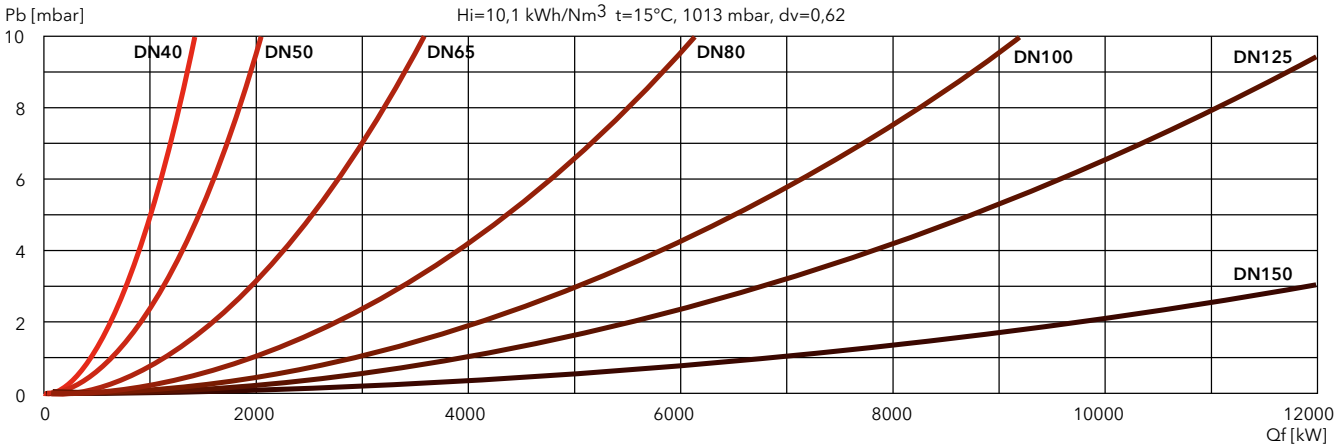

PRESSURE LOSS [BURNER HEAD + GAS TRAIN] (mbar)

EK EVO 6.2900 G-EF3

DUNGS

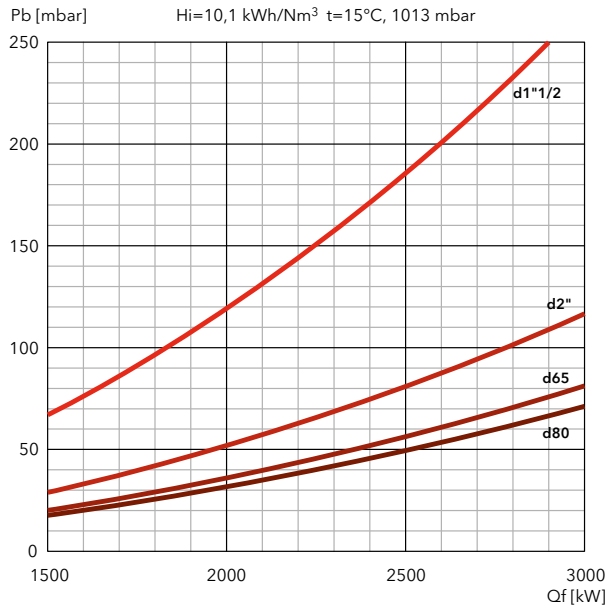

SIEMENS

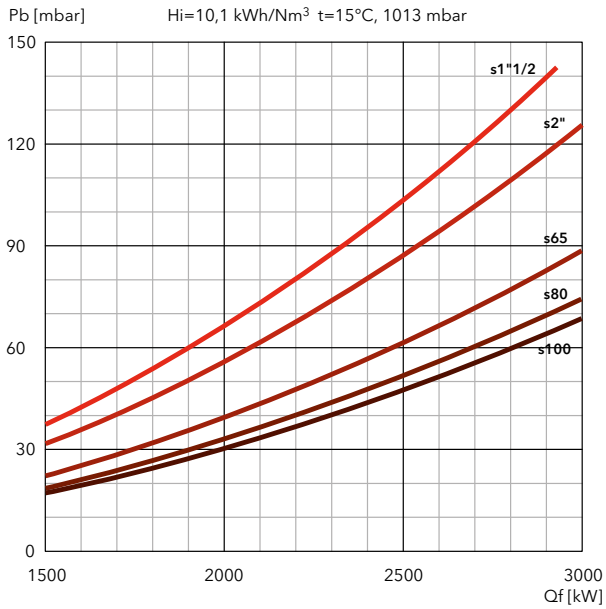

FILTERS

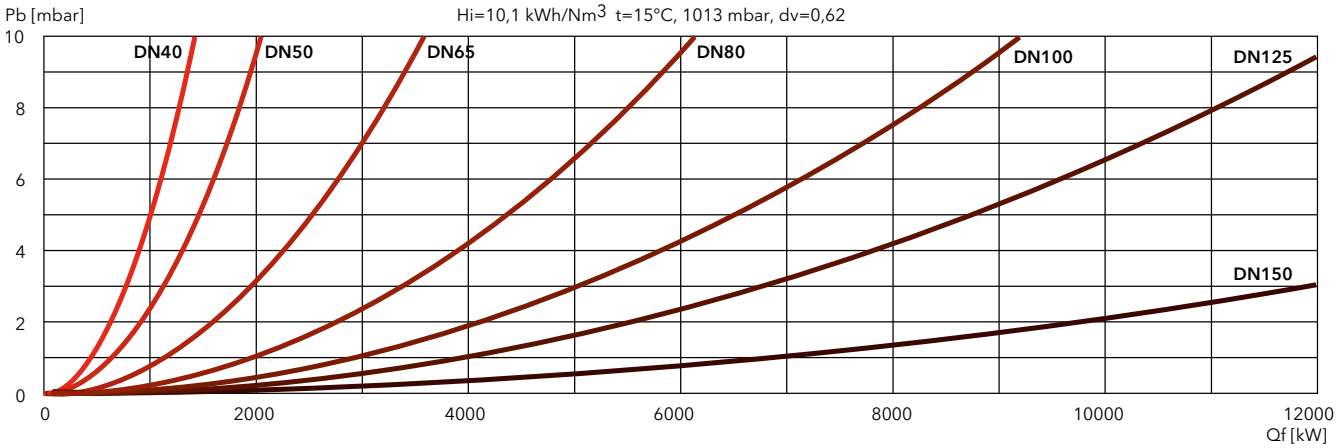

EK EVO

GAS

Low NOx Class 3

EK EVO 7 G-EF3

470 … 5500 kW
Two stage progressive/modulating electronic

- **Fuels:** natural gas, Hi = 6,99 … 11,39 kWh/Nm³;
  LPG, Hi = 25,89 kWh/Nm³
- **Emission class:** Low NOx class 3 (≤80 mg/kWh) according to EN676
- **Protection level:** IP 41

TECHNICAL DATA

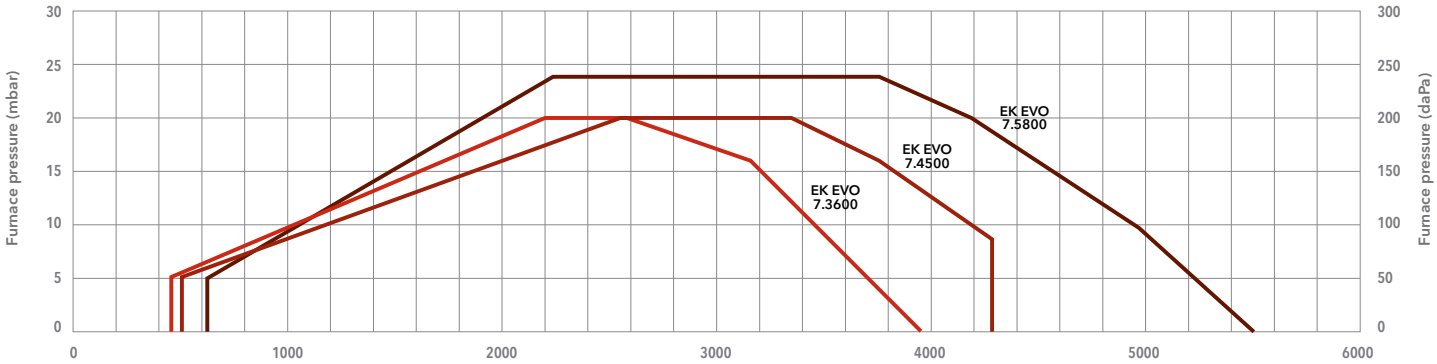

Test conditions conforming to EN676 - Temperature: 20°C - Pressure: 1013,5 mbar - Altitude: 0 m a.s.l.

Power (kW)

		EK EVO 7.3600 G-EF3	EK EVO 7.4500 G-EF3	EK EVO 7.5800 G-EF3
Operating range		470 – 3980 kW	510 – 4290 kW	620 – 5500 kW
Gas pressure		50 – 500 mbar (50 – 360 mbar for d452 and d453)		
Gas connection		DN65	DN65	DN65
Control box / flame detector		BT300 / QRA2	BT300 / QRA2	BT300 / QRA2
Auxiliary voltage		1NPE AC 230 V – 50 Hz TN-S	1NPE AC 230 V – 50 Hz TN-S	1NPE AC 230 V – 50 Hz
Power supply		3PE AC 400 V – 50 Hz	3PE AC 400 V – 50 Hz	3PE AC 400 V – 50 Hz
Fan motor		50 Hz – 7,5 kW	50 Hz – 7,5 kW	50 Hz – 11 kW
Acoustic level		<83 dB(A)	<81 dB(A)	<85 dB(A)
CE certificate		0085CL0215	0085CL0215	0085CL0215
Burner codes (body + head)	KN	**3754048**	**3754049**	**3756103**
	KM	**3754052**	**3754053**	**3756104**
	KL	**3754056**	**3754057**	**3756105**

GAS TRAINS

DUNGS

Model	Code
GT-d452-1"1/2 (*)	3750510
GT-d453-2" (*)	3750511
GT-d454-65	3750512
GT-d455-80	3750513
GT-d456-100	3750514

*: integrated filter

SIEMENS

Model	Code
GT-s451-1"1/2	3750525
GT-s452-2"	3750526
GT-s453-65	3750527
GT-s454-80	3750528
GT-s455-100	3750529
GT-s456-125	3750530

FILTERS

Model	Code
FG-Rp1"1/2	3757199
FG-Rp2"	3757200
FG-DN65	3757198
FG-DN80	3757201
FG-DN100	3757195
FG-DN125	3757209

i **Pressure drops graphs**: see following pages
Dimensions of gas trains and gas filters: see page 310

DIMENSIONS (mm)

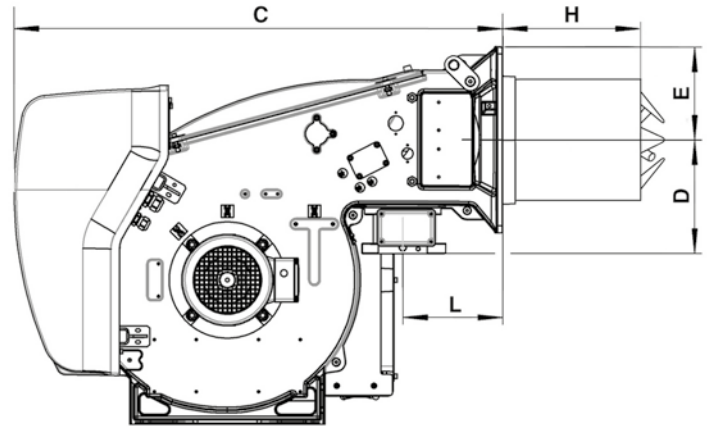

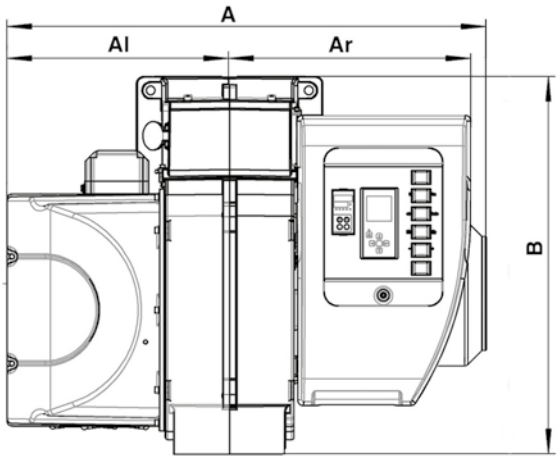

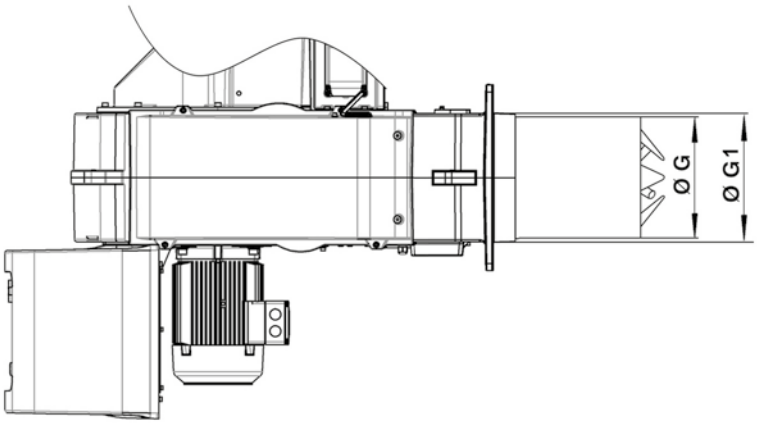

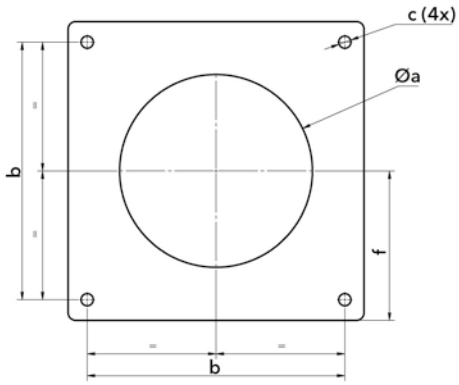

Model	A	Al	Ar	B	C	D	E	ØG	ØG1	H			L	Øa	b	c	f
										KN	KM	KL					
EK EVO 7.3600/4500	1096	509	587	941	1120	276	235	323,5	338,5	420	550	680	225	360-400	400	M16	235
EK EVO 7.5800	1205	510	695	941	1171	276	235	323,5	338,5	420	550	680	225	360-400	400	M16	235

PACKAGING

The burner is delivered on a pallet with:
- burner body with mounted combustion head
- gas train and filter
- boiler fixing accessories
- technical documentation

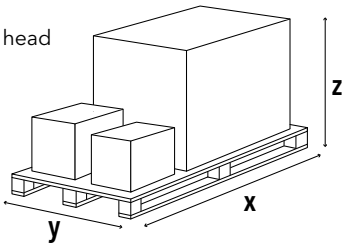

Model	Dimensions (mm)			Gross weight (kg)
	X	Y	Z	
EK EVO 7.3600 G-EF3	2046	1414	1233	350
EK EVO 7.4500 G-EF3	2046	1414	1233	350
EK EVO 7.5800 G-EF3	2046	1414	1233	350

EK EVO 7 G-EF3

470 ... 5500 kW
Two stage progressive/modulating electronic

PRESSURE LOSS [BURNER HEAD + GAS TRAIN] (mbar)

EK EVO 7.3600 G-EF3

DUNGS

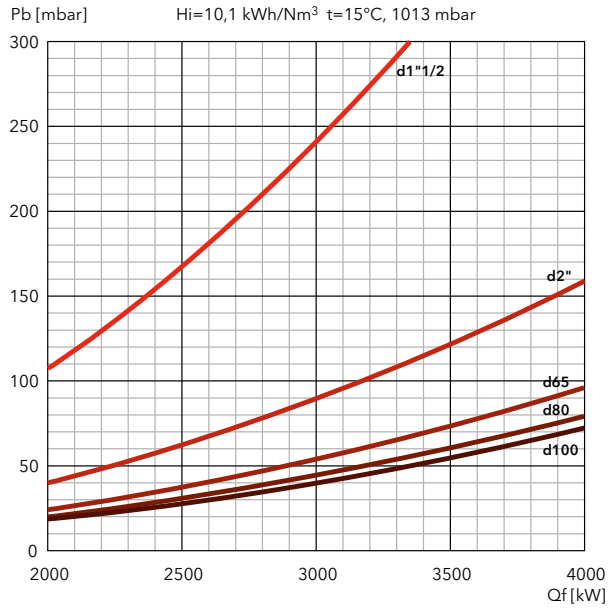

SIEMENS

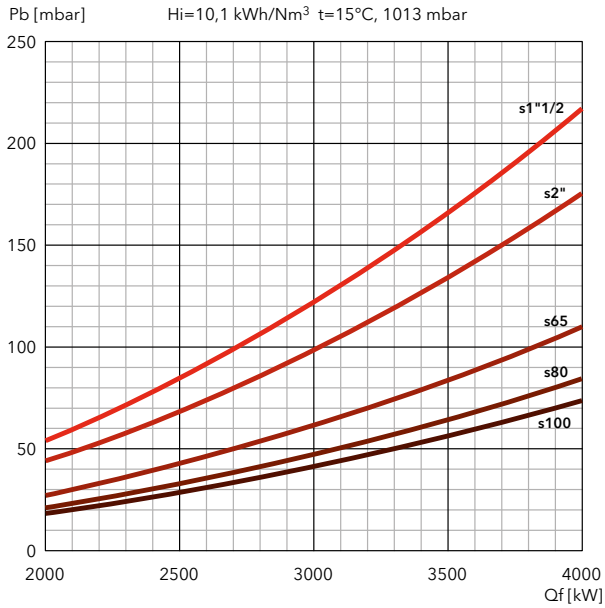

EK EVO 7.4500 G-EF3

DUNGS

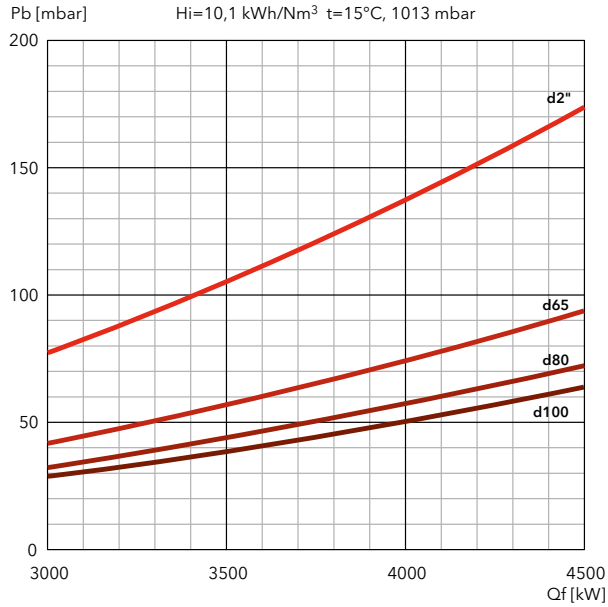

SIEMENS

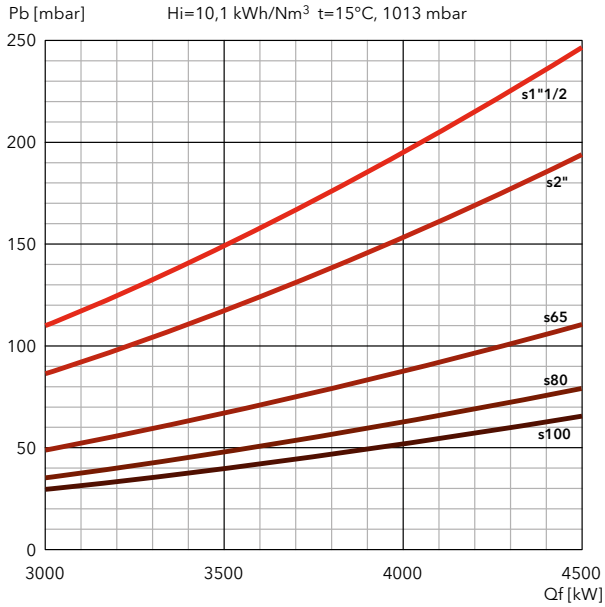

FILTERS

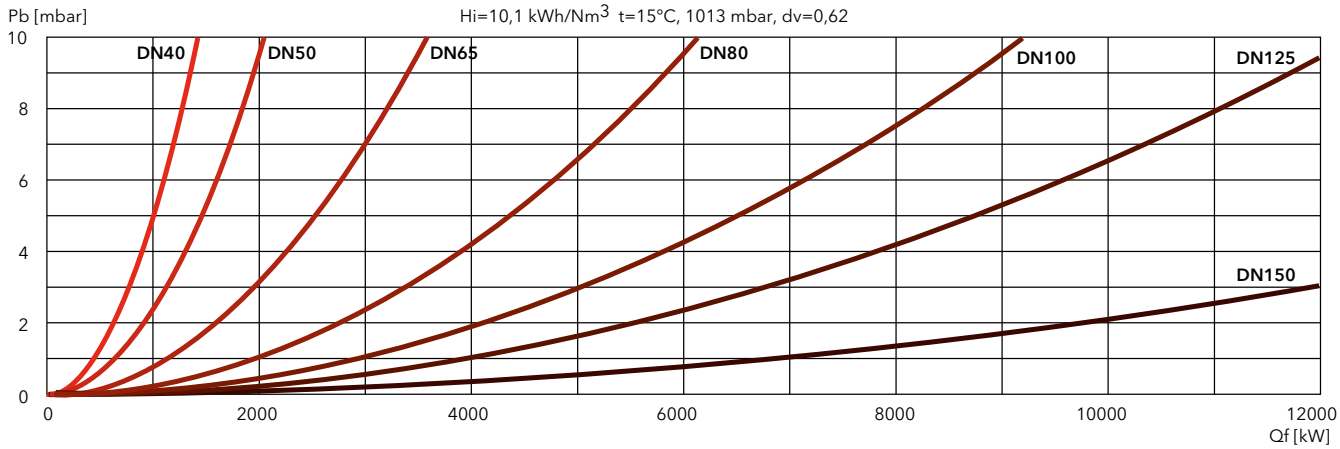

PRESSURE LOSS [BURNER HEAD + GAS TRAIN] (mbar)

EK EVO 7.5800 G-EF3

DUNGS

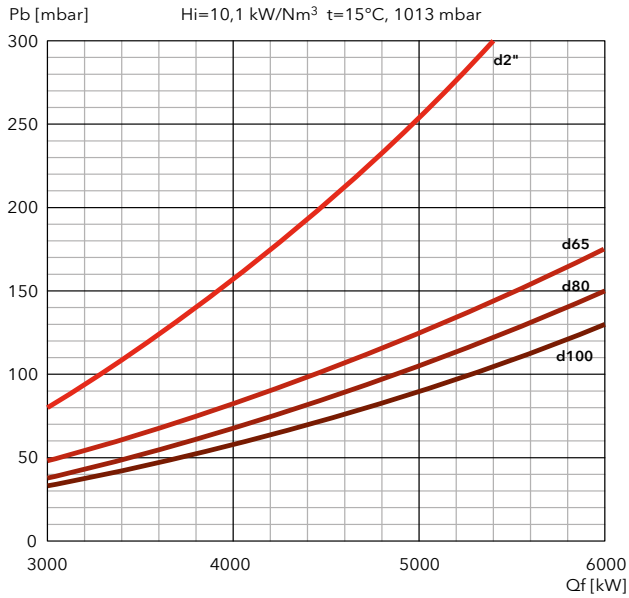

SIEMENS

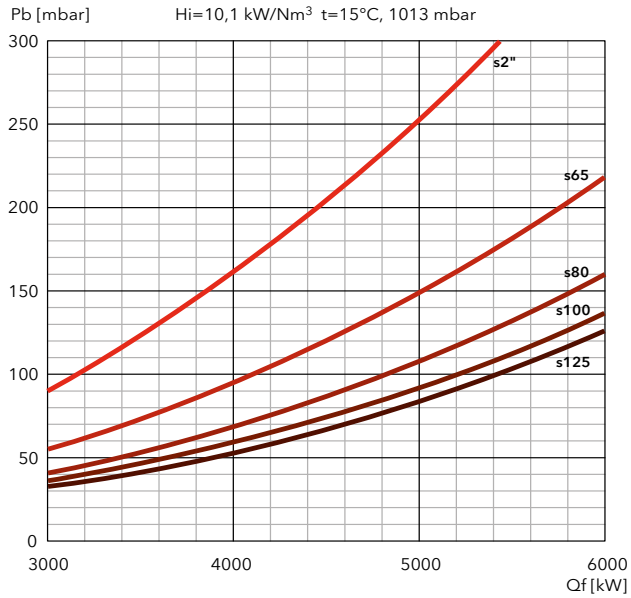

FILTERS

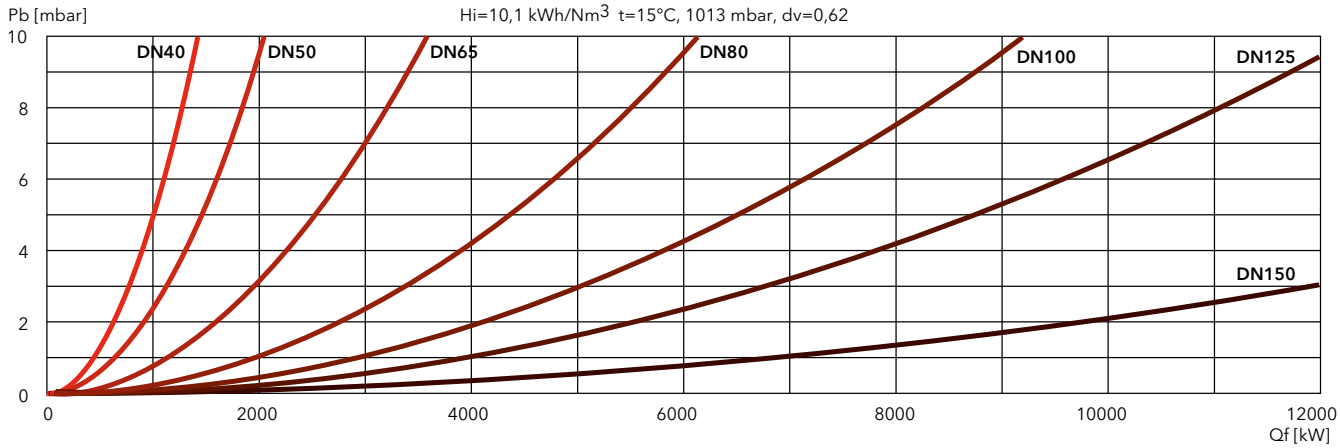

EK EVO

GAS

Low NOx Class 3

EK EVO 7 G-EU3

610 … 7450 kW
Two stage progressive/modulating electronic

- **Fuels:** natural gas, Hi = 6,99 … 11,39 kWh/Nm³;
  LPG, Hi = 25,89 kWh/Nm³
- **Emission class:** Low NOx class 3 (≤80 mg/kWh) according to EN676
- **Addtional configuration:** models with FGR System (≤30 mg/kWh) available on request
- **Protection level:** IP 41

TECHNICAL DATA

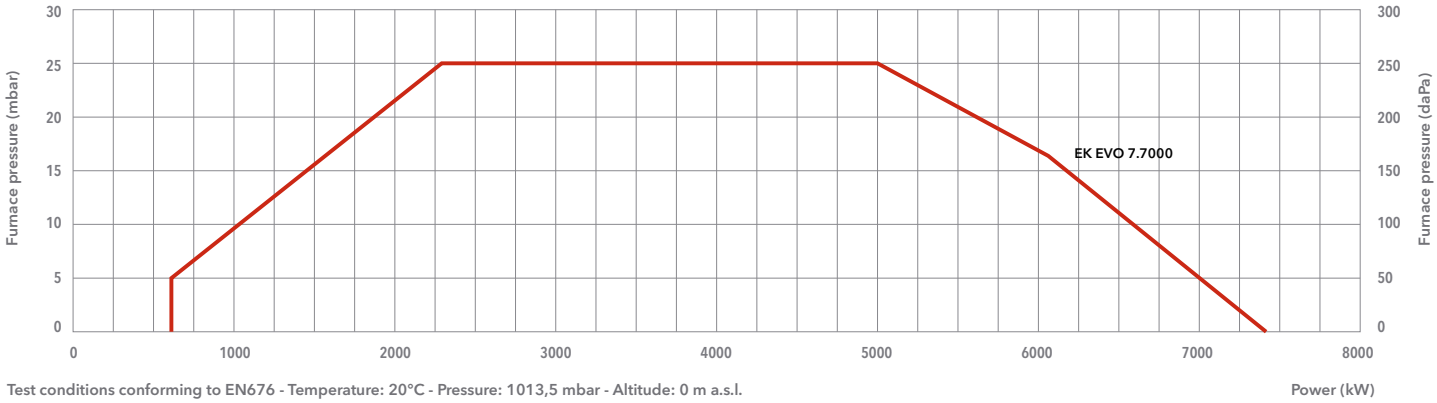

Test conditions conforming to EN676 - Temperature: 20°C - Pressure: 1013,5 mbar - Altitude: 0 m a.s.l.

		EK EVO 7.7000 G-EU3
Operating range		610 – 7450 kW
Gas pressure		105 – 500 mbar (105 – 360 mbar for d452 and d453)
Gas connection		DN65
Control box / flame detector		BT300 / KLC
Auxiliary voltage		1NPE AC 230 V – 50 Hz
Power supply		3PE AC 400 V – 50 Hz
Fan motor		50 Hz – 15 kW
Acoustic level		<89 dB(A)
CE certificate		0085CL0215
Burner codes (body + head)	KN	**3758210**
	KM	**3758211**
	KL	**3758212**

GAS TRAINS

DUNGS

Model	Code
GT-d453-2" (*)	3750511
GT-d454-65	3750512
GT-d455-80	3750513
GT-d456-100	3750514

*: integrated filter

SIEMENS

Model	Code
GT-s452-2"	3750526
GT-s453-65	3750527
GT-s454-80	3750528
GT-s455-100	3750529
GT-s456-125	3750530

FILTERS

Model	Code
FG-Rp2"	3757200
FG-DN65	3757198
FG-DN80	3757201
FG-DN100	3757195
FG-DN125	3757209

Pressure drops graphs: see following pages
Dimensions of gas trains and gas filters: see page 310

DIMENSIONS (mm)

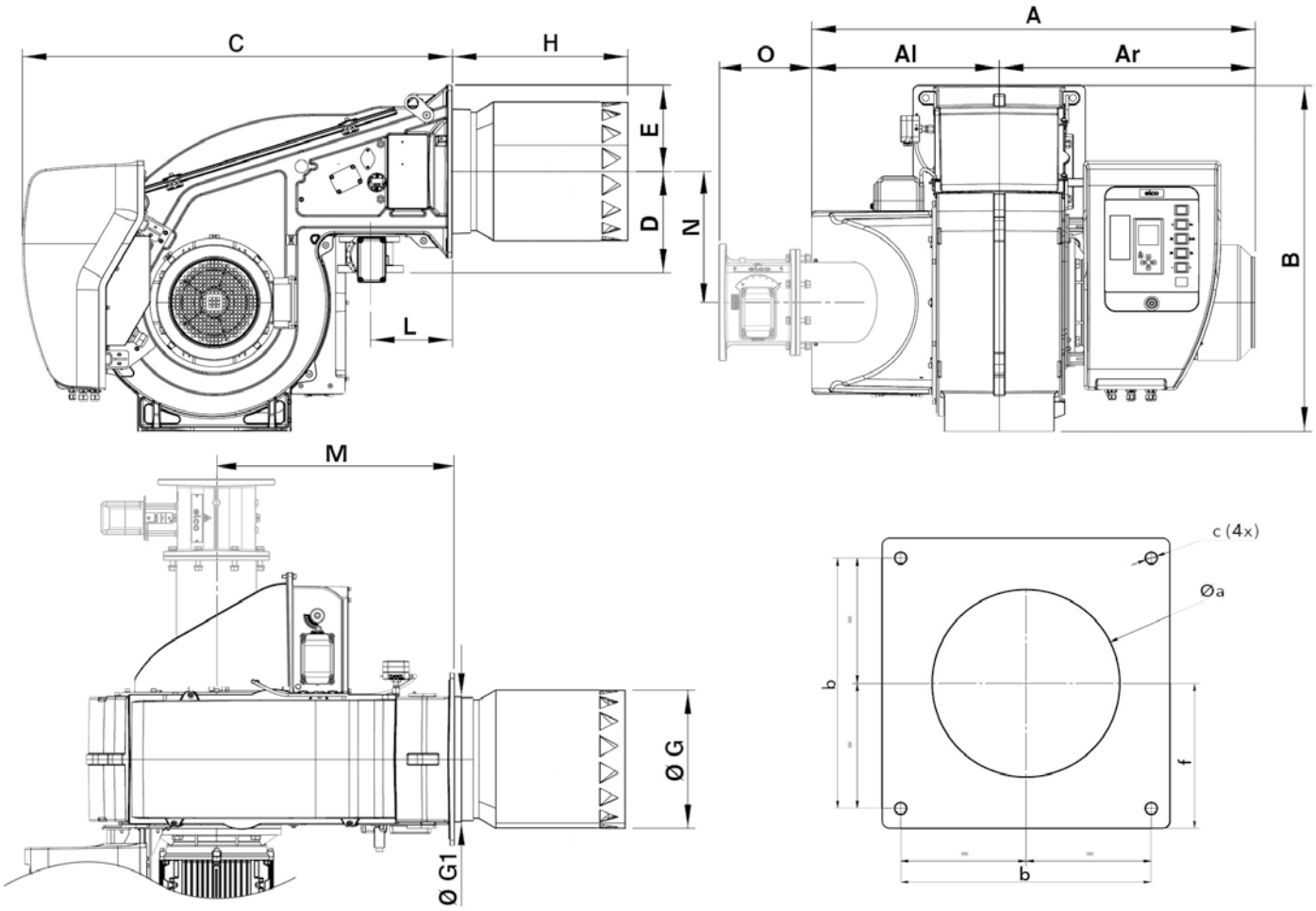

Model	A	Al	Ar	B	C	D	E	ØG	ØG1	H			L	M*	N*	O*	Øa	b	c	f
										KN	KM	KL								
EK EVO 7.7000 G-EU3	1205	510	695	941	1168	276	235	376	340	501	641	781	225	647	356	255	390-400	400	M16	235

*: in FGR configuration

PACKAGING

The burner is delivered on a pallet with:
- burner body with mounted combustion head
- gas train and filter
- boiler fixing accessories
- technical documentation

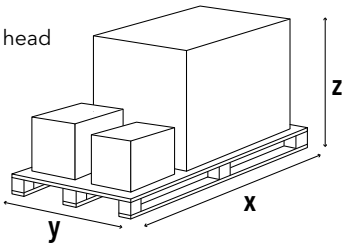

Model	Dimensions (mm)			Gross weight (kg)
	X	Y	Z	
EK EVO 7.7000 G-EU3	2046	1414	1233	350

EK EVO 7 G-EU3

610 ... 7450 kW
Two stage progressive/modulating electronic

PRESSURE LOSS [BURNER HEAD + GAS TRAIN] (mbar)

EK EVO 7.7000 G-EU3

DUNGS

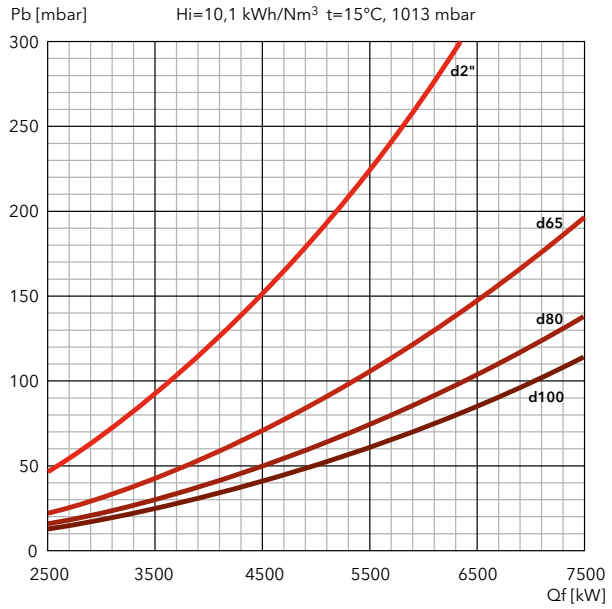

SIEMENS

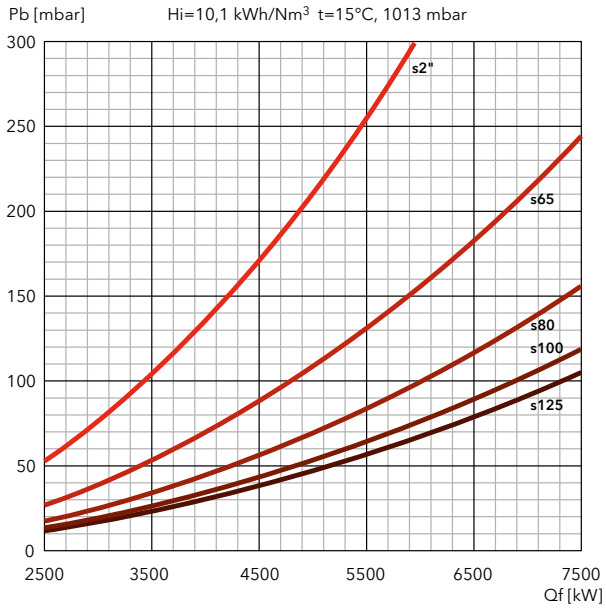

PRESSURE LOSS [BURNER HEAD + GAS TRAIN] (mbar)

FILTERS

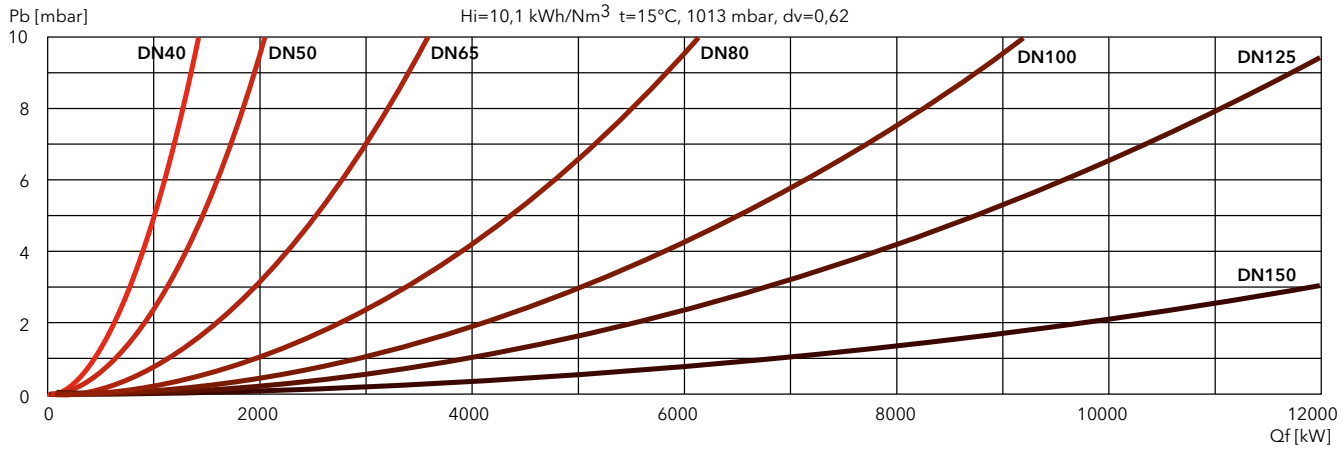

EK EVO

GAS

Low NOx Class 3

EK EVO 8 G-EU3 / EK EVO 9 G-EU3

600 … 10500 kW
Two stage progressive/modulating electronic

- **Fuels:** natural gas, Hi = 6,99 … 11,39 kWh/Nm³;
  LPG, Hi = 25,89 kWh/Nm³
- **Emission class:** Low NOx class 3 (≤80 mg/kWh) according to EN676
- **Addtional configuration:** models with FGR System (≤30 mg/kWh) available on request
- **Protection level:** IP 41

TECHNICAL DATA

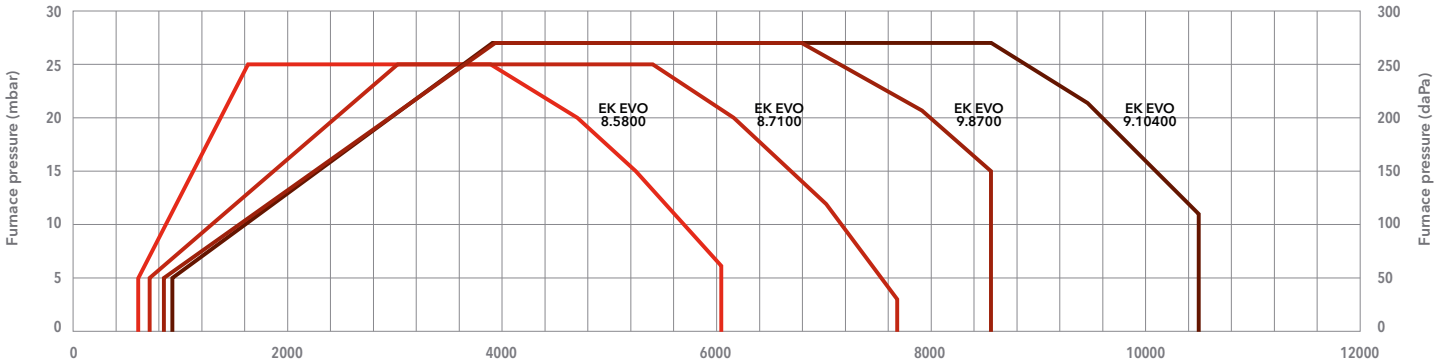

Test conditions conforming to EN676 - Temperature: 20°C - Pressure: 1013,5 mbar - Altitude: 0 m a.s.l.

Power (kW)

		EK EVO 8.5800 G-EU3	EK EVO 8.7100 G-EU3	EK EVO 9.8700 G-EU3	EK EVO 9.10400 G-EU3
Operating range		600 – 6070 kW	700 – 7700 kW	850 – 8530 kW	910 – 10500 kW
Gas pressure		70 – 500 mbar (70 – 360 mbar for d457)		80 – 500 mbar (80 – 360 mbar for d457)	
Gas connection		DN100	DN100	DN100	DN100
Control box / flame detector		BT300 / Ionisation	BT300 / Ionisation	BT300 / Ionisation	BT300 / Ionisation
Auxiliary voltage		1NPE AC 230 V – 50 Hz TN-S	1NPE AC 230 V – 50 Hz TN-S	1NPE AC 230 V – 50 Hz TN-S	1NPE AC 230 V – 50 Hz TN-S
Power supply		3PE AC 400 V – 50 Hz	3PE AC 400 V – 50 Hz	3PE AC 400 V – 50 Hz	3PE AC 400 V – 50 Hz
Fan motor		50 Hz – 11 kW	50 Hz – 15 kW	50 Hz – 18,5 kW	50 Hz – 22 kW
Acoustic level		<80,2 dB(A)	<82,3 dB(A)	<85,4 dB(A)	<86,1 dB(A)
CE certificate		0085CL0215	0085CL0215	0085CL0215	0085CL0215
Burner codes (body + head)	**KN**	**3753969**	**3753970**	**3753971**	**3753972**
	KM	**3753978**	**3753979**	**3753980**	**3753981**
	KL	**3753986**	**3753987**	**3753988**	**3753989**

GAS TRAINS

DUNGS

Model	Code
GT-d457-2" (*)	3750515
GT-d458-65	3750516
GT-d459-80	3750517
GT-d460-100	3750518
GT-d125	on request

*: integrated filter

SIEMENS

Model	Code
GT-s451-1"1/2	3750525
GT-s457-2"	3750537
GT-s458-65	3750538
GT-s459-80	3750539
GT-s460-100	3750540
GT-s461-125	3750541

FILTERS

Model	Code
FG-Rp1"1/2	3757199
FG-Rp2"	3757200
FG-DN65	3757198
FG-DN80	3757201
FG-DN100	3757195
FG-DN125	3757209

Pressure drops graphs: see following pages
Dimensions of gas trains and gas filters: see page 311

DIMENSIONS (mm)

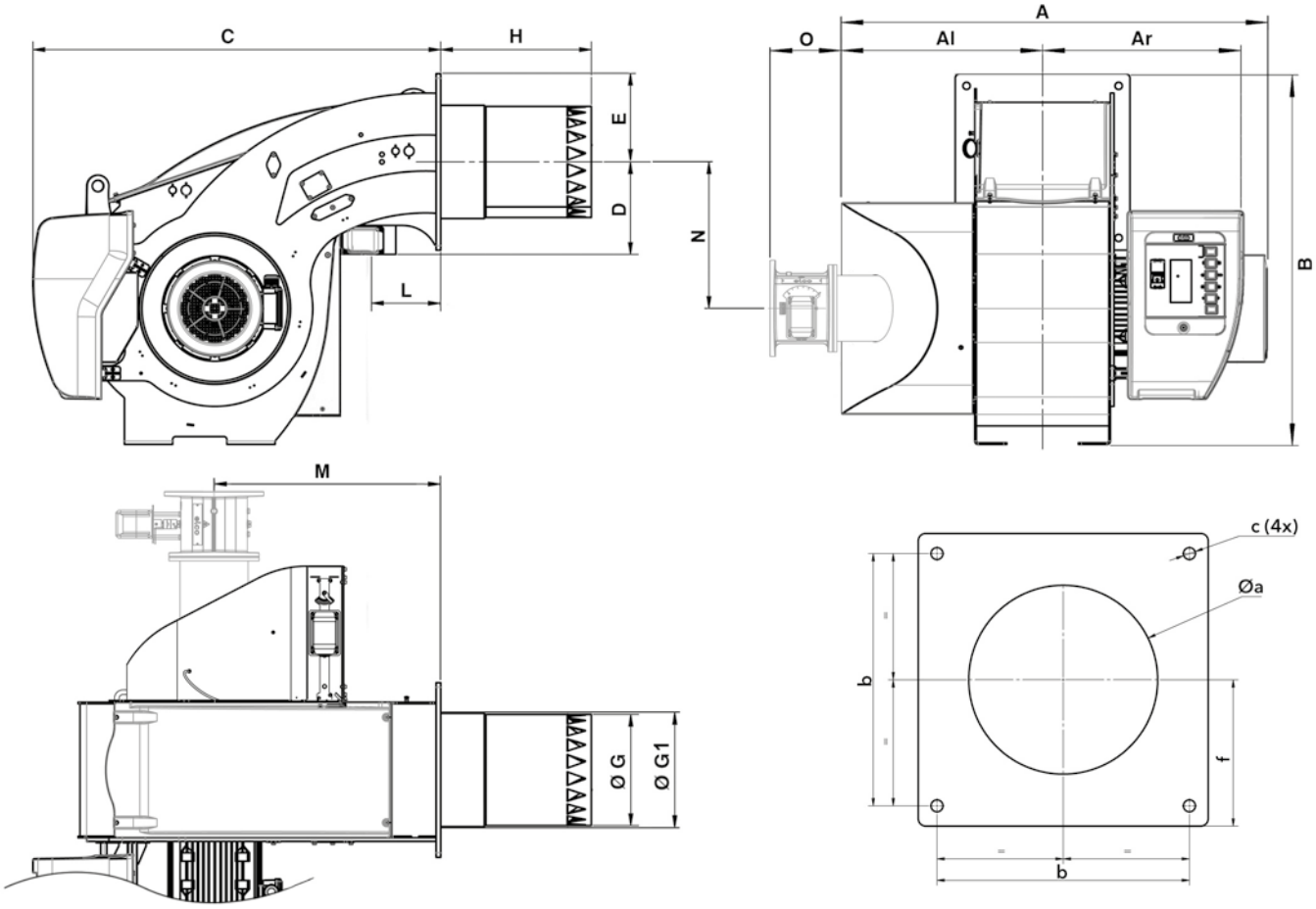

Model	A	Al	Ar	B	C	D	E	ØG	ØG1	H			L	M*	N*	O*	Øa	b	c	f
										KN	KM	KL								
EK EVO 8.5800 G-EU3	1326	670	656	1231	1354	307	293	369	376	500	640	780	230	750	487	240	385-410	505	M20	293
EK EVO 8.7100 G-EU3	1326	670	656	1231	1354	307	293	369	376	500	640	780	230	750	487	240	385-410	505	M20	293
EK EVO 9.8700 G-EU3	1326	670	656	1291	1350	332	293	431,5	438,5	550	700	850	230	750	530	240	450-480	505	M20	293
EK EVO 9.10400 G-EU3	1401	670	656	1291	1350	332	293	431,5	438,5	550	700	850	230	750	530	240	450-480	505	M20	293

*: in FGR configuration

PACKAGING

The burner is delivered on a pallet with:
- burner body with mounted combustion head
- gas train and filter
- boiler fixing accessories
- technical documentation

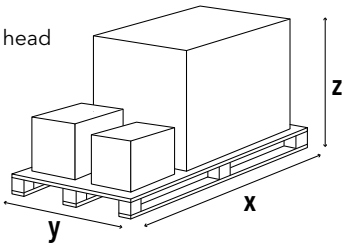

Model	Dimensions (mm)			Gross weight (kg)
	X	Y	Z	
EK EVO 8.5800 G-EU3	2300	1500	1573	580
EK EVO 8.7100 G-EU3	2300	1500	1573	580
EK EVO 9.8700 G-EU3	2300	1500	1573	700
EK EVO 9.10400 G-EU3	2300	1500	1573	700

EK EVO 8 G-EU3 / EK EVO 9 G-EU3

600 ... 10500 kW
Two stage progressive/modulating electronic

PRESSURE LOSS [BURNER HEAD + GAS TRAIN] (mbar)

EK EVO 8.5800 G-EU3

DUNGS

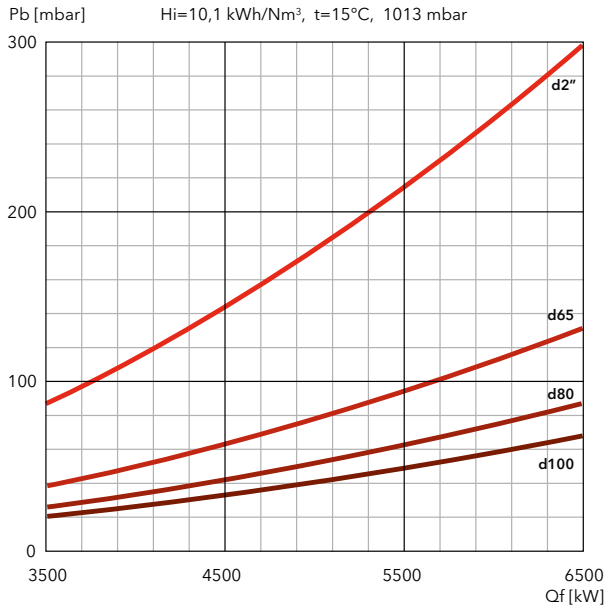

SIEMENS

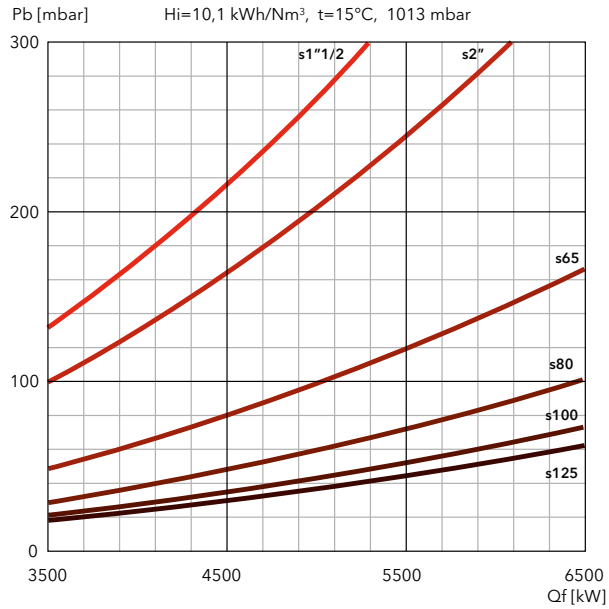

EK EVO 8.7100 G-EU3

DUNGS

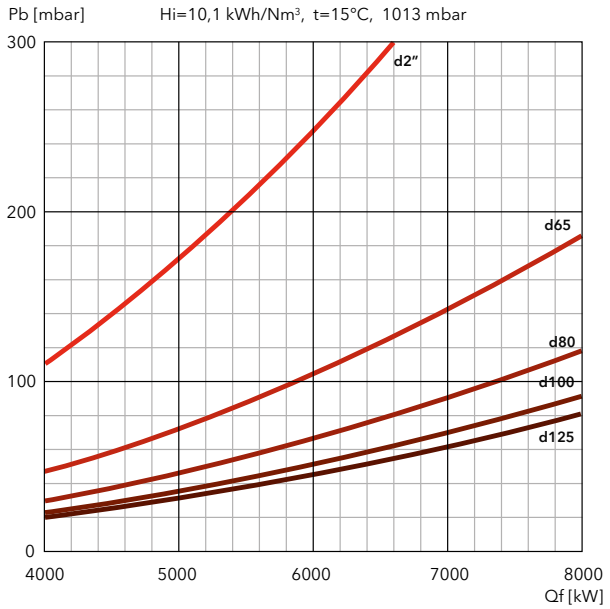

SIEMENS

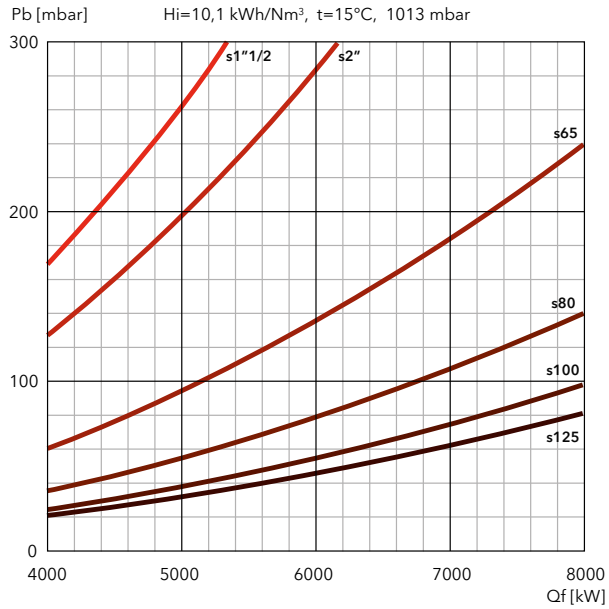

FILTERS

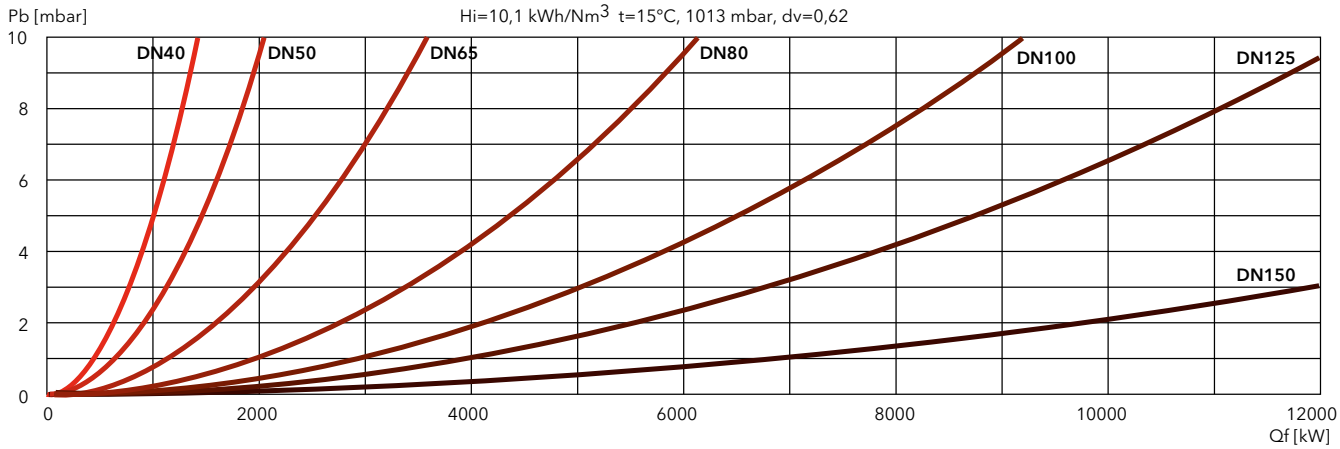

PRESSURE LOSS [BURNER HEAD + GAS TRAIN] (mbar)

EK EVO 9.8700 G-EU3

DUNGS

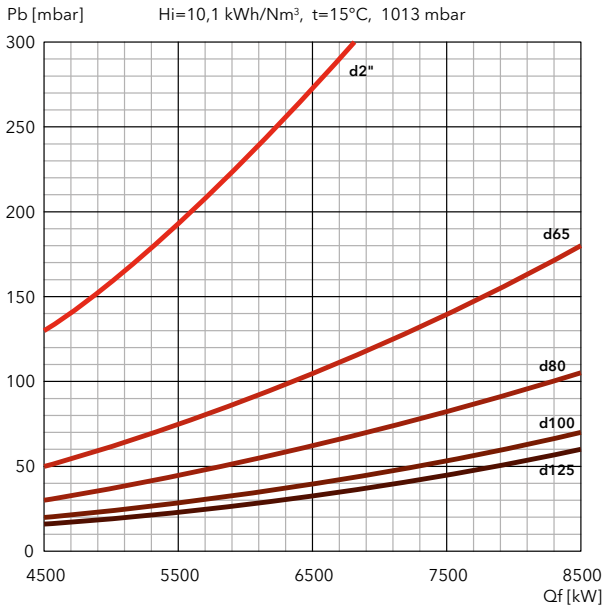

SIEMENS

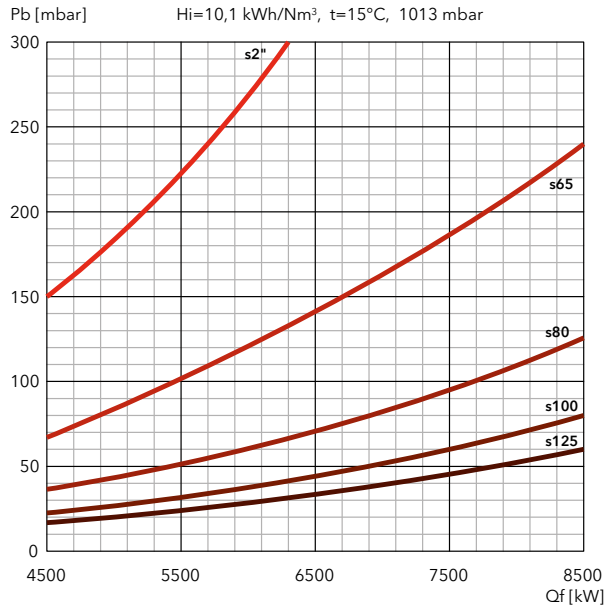

EK EVO 9.10400 G-EU3

DUNGS

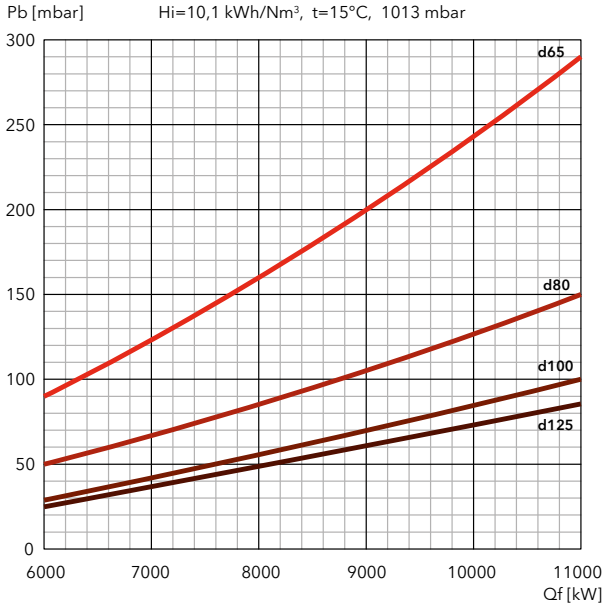

SIEMENS

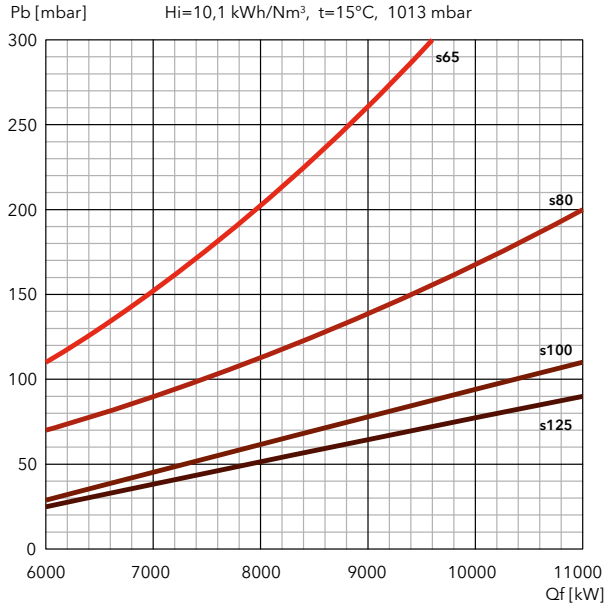

FILTERS

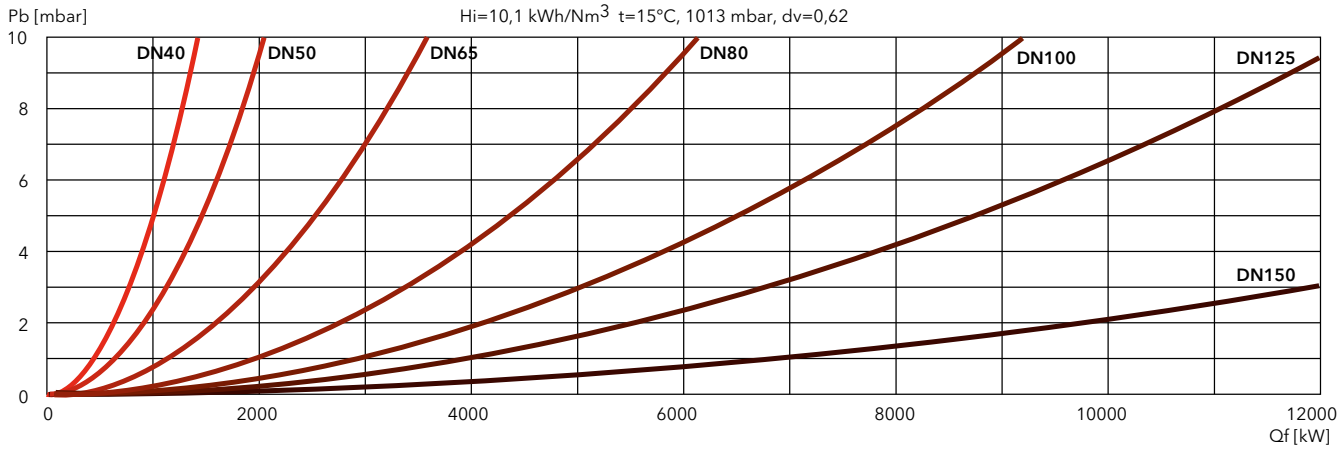

EK EVO

GAS

Low NOx Class 3

EK EVO 9 G-EU3

1350 … 13500 kW
Two stage progressive/modulating electronic

- **Fuels:** natural gas, Hi = 6,99 … 11,39 kWh/Nm³;
  LPG, Hi = 25,89 kWh/Nm³
- **Emission class:** Low NOx class 3 (≤80 mg/kWh) according to EN676
- **Addtional configuration:** model with FGR System (≤30 mg/kWh) available on request
- **Protection level:** IP 41

TECHNICAL DATA

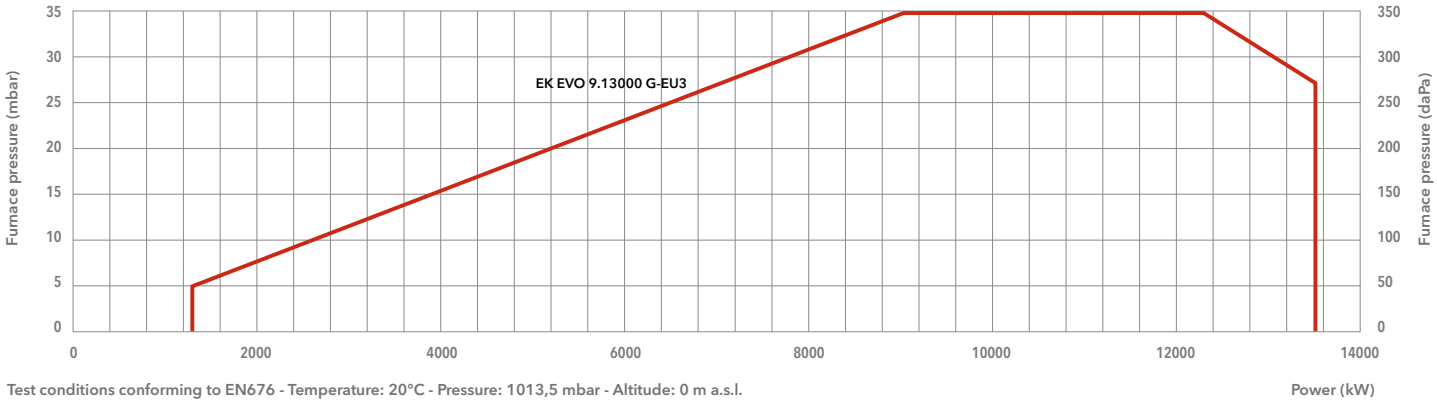

Test conditions conforming to EN676 - Temperature: 20°C - Pressure: 1013,5 mbar - Altitude: 0 m a.s.l.

		EK EVO 9.13000 G-EU3
Operating range		1350 – 13500 kW
Gas pressure		130 – 500 mbar
Gas connection		DN100
Control box / flame detector		BT300 / QRA2
Auxiliary voltage		1NPE AC 230 V – 50/60 Hz
Power supply		3PE AC 400 V – 50 Hz
Fan motor		50 Hz – 37 kW
Acoustic level		<93,5 dB(A)
CE certificate		0085CL0215
Burner codes (body + head)	KN	**3758162**
	KM	**3758163**
	KL	**3758164**

GAS TRAINS

DUNGS

Model	Code
GT-d459-80	3750517
GT-d460-100	3750518
GT-d125	on request

SIEMENS

Model	Code
GT-s459-80	3750539
GT-s460-100	3750540
GT-s461-125	3750541
GT-s150	on request

FILTERS

Model	Code
FG-DN80	3757201
FG-DN100	3757195
FG-DN125	3757209
FG-DN150	3757210

i **Pressure drops graphs**: see following pages
Dimensions of gas trains and gas filters: see page 311

DIMENSIONS (mm)

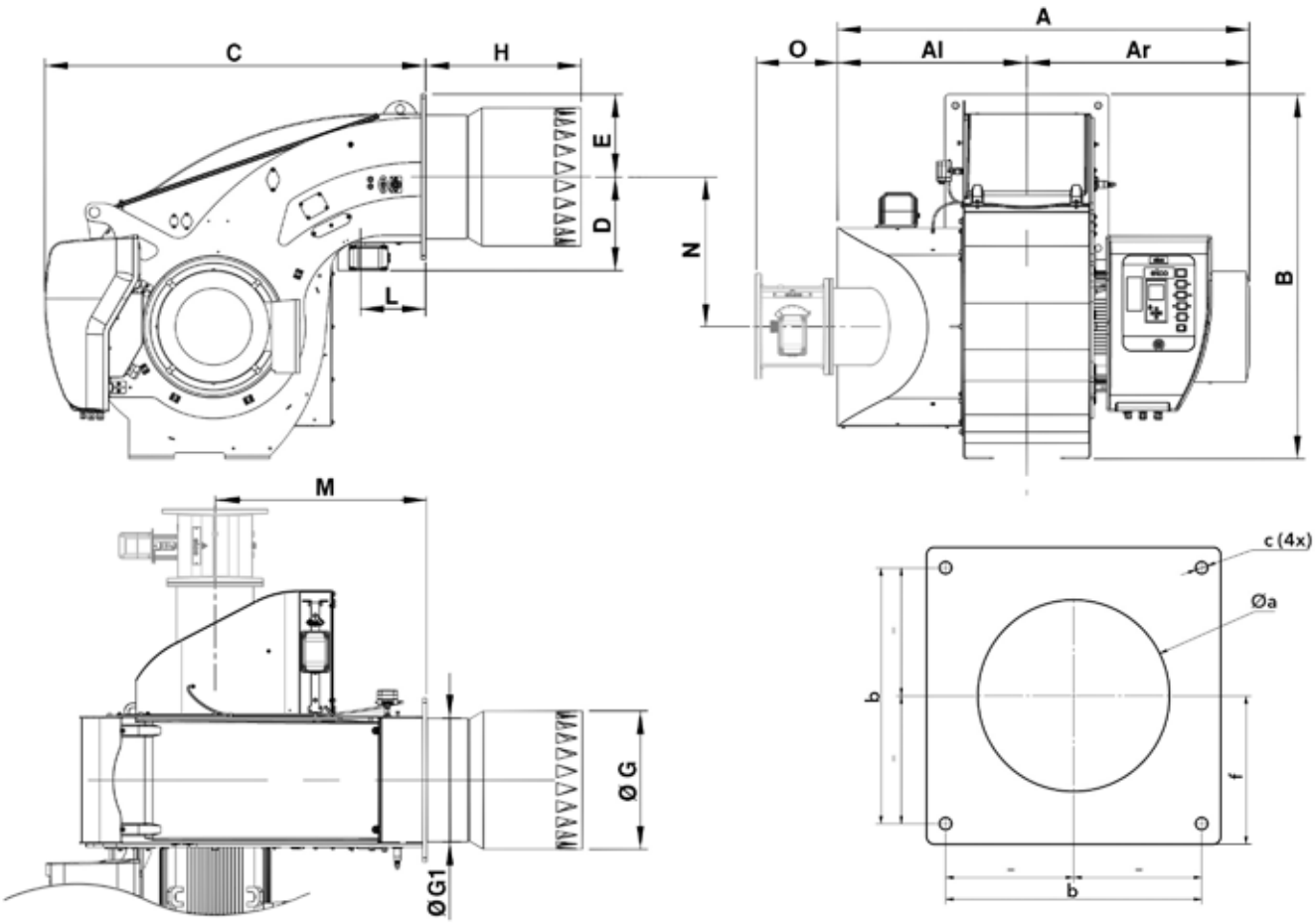

Model	A	Al	Ar	B	C	D	E	ØG	ØG1	H			L	M*	N*	O*	Øa	b	c	f
										KN	KM	KL								
EK EVO 9.13000 G-EU3	1456	669	788	1286	1348	332	293	490	439	550	700	850	230	750	530	291	510-520	505	M20	293

*: in FGR configuration

PACKAGING

The burner is delivered on a pallet with:
- burner body with mounted combustion head
- gas train and filter
- boiler fixing accessories
- technical documentation

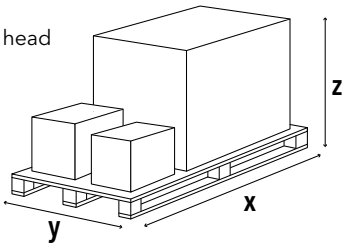

Model	Dimensions (mm)			Gross weight (kg)
	X	Y	Z	
EK EVO 9.13000 G-EU3	2300	1500	1573	700

EK EVO 9 G-EU3

1350 ... 13500 kW
Two stage progressive/modulating electronic

PRESSURE LOSS [BURNER HEAD + GAS TRAIN] (mbar)

EK EVO 9.13000 G-EU3

DUNGS

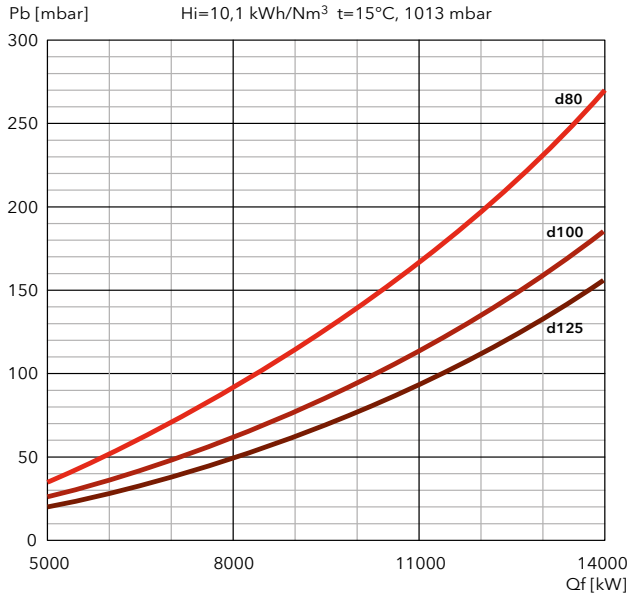

SIEMENS

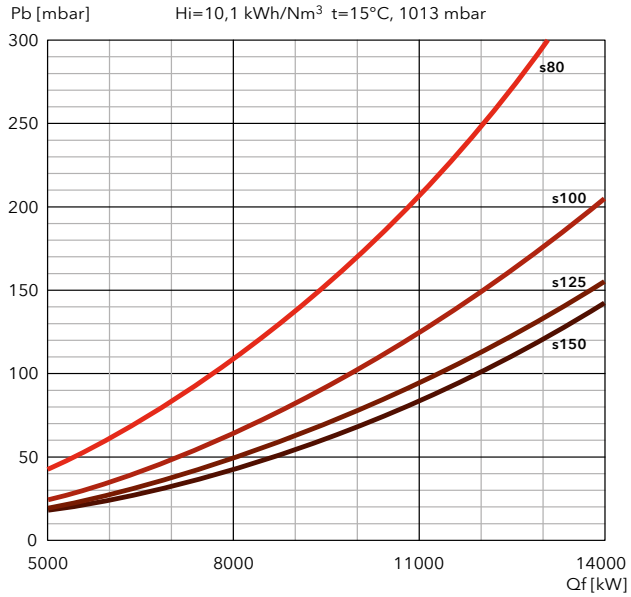

PRESSURE LOSS [BURNER HEAD + GAS TRAIN] (mbar)

FILTERS

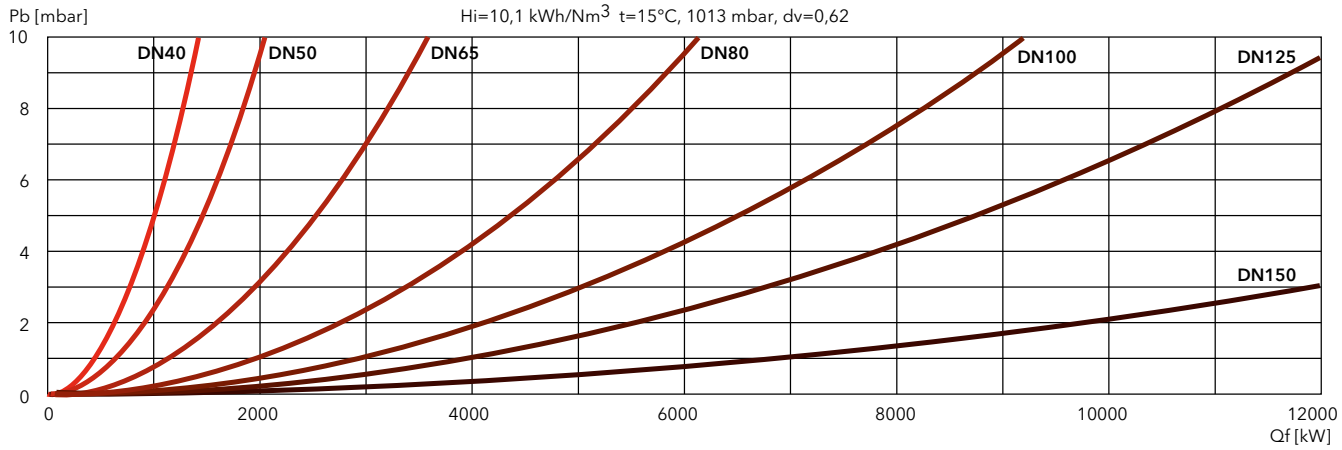

EK EVO

GAS

Low NOx Class 3

EK EVO 6 G-EU2N / EK EVO 7 G-EU2N

360 … 3720 kW
Two stage progressive/modulating electronic

- **Fuels:** natural gas, Hi = 6,99 … 11,39 kWh/Nm³;
  LPG, Hi = 25,89 kWh/Nm³
- **Emission class:** Low NOx class 3 (≤80 mg/kWh) according to EN676
- **Protection level:** IP 41

TECHNICAL DATA

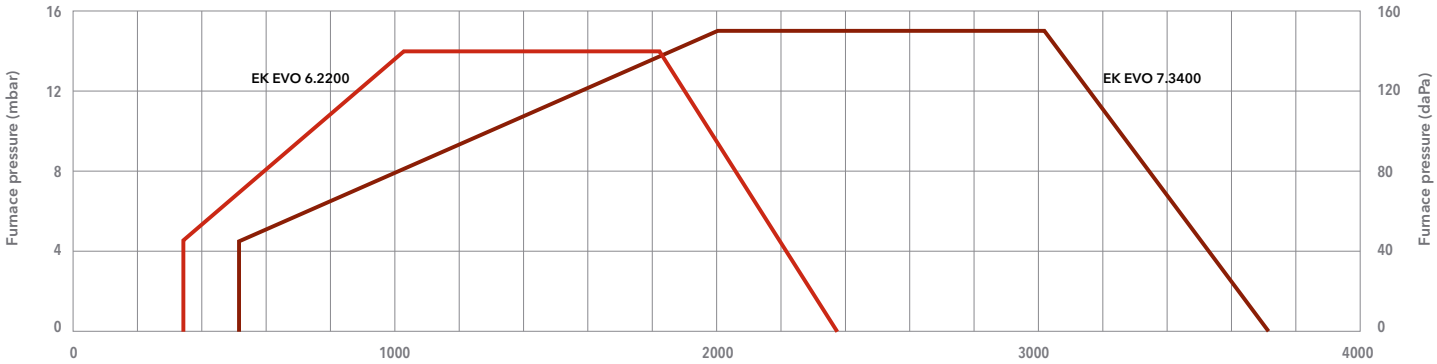

Test conditions conforming to EN676 - Temperature: 20°C - Pressure: 1013,5 mbar - Altitude: 0 m a.s.l.

Power (kW)

		EK EVO 6.2200 G-EU2N	EK EVO 7.3400 G-EU2N
Operating range		360 – 2380 kW	530 – 3720 kW
Gas pressure		75 – 500 mbar (75 – 360 mbar for d452 and d453)	80 – 500 mbar (80 – 360 mbar for d452 and d453)
Gas connection		DN65	DN65
Control box / flame detector		BT300 / QRA 2	BT300 / QRA 2
Auxiliary voltage		1NPE AC 230 V – 50 Hz TN-S	1NPE AC 230 V – 50 Hz TN-S
Power supply		3PE AC 400 V – 50 Hz	3PE AC 400 V – 50 Hz
Fan motor		50 Hz – 4 kW	50 Hz – 7,5 kW
Acoustic level		<77 dB(A)	<83 dB(A)
CE certificate		0085CL0215	0085CL0215
Burner codes (body + head)	KN	**3754672**	**3754681**
	KM	**3754673**	**3754682**
	KL	**3754674**	**3754683**

GAS TRAINS

DUNGS

Model	Code
GT-d452-1"1/2 (*)	3750510
GT-d453-2" (*)	3750511
GT-d454-65	3750512
GT-d455-80	3750513
GT-d456-100	3750514

SIEMENS

Model	Code
GT-s451-1"1/2	3750525
GT-s452-2"	3750526
GT-s453-65	3750527
GT-s454-80	3750528
GT-s455-100	3750529

FILTERS

Model	Code
FG-Rp1"1/2	3757199
FG-Rp2"	3757200
FG-DN65	3757198
FG-DN80	3757201
FG-DN100	3757195

*: integrated filter

Pressure drops graphs: see following pages
Dimensions of gas trains and gas filters: see page 310

DIMENSIONS (mm)

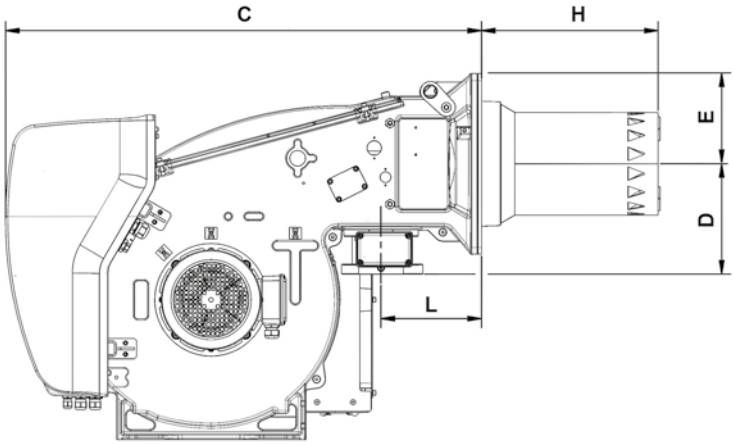

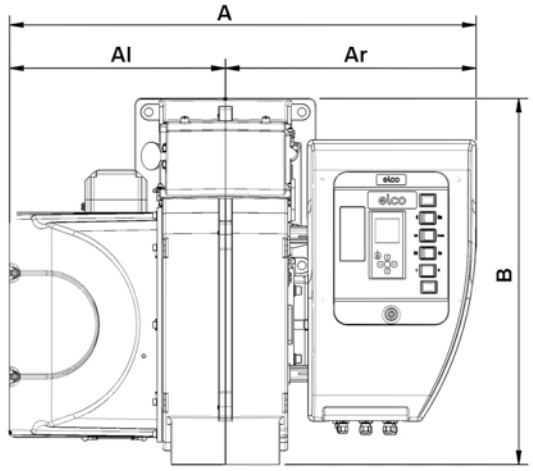

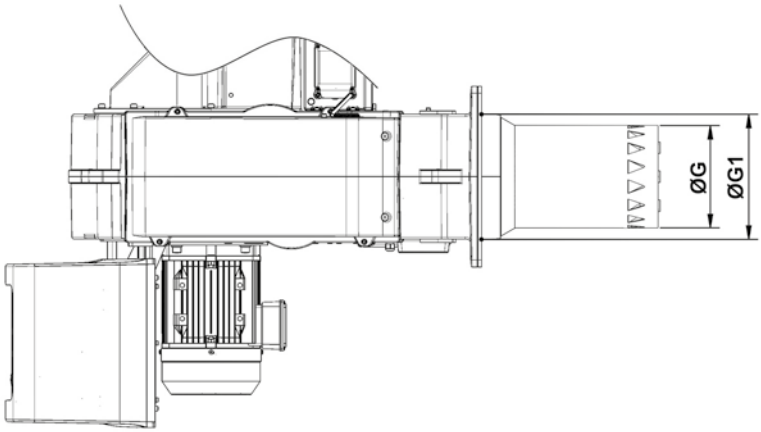

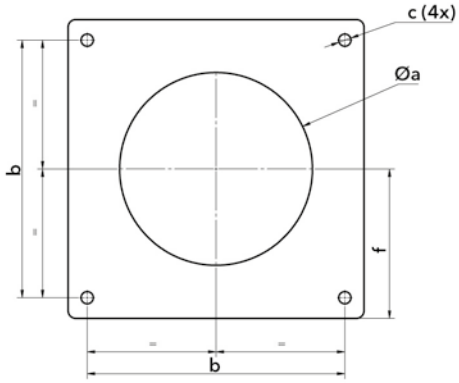

Model	A	Al	Ar	B	C	D	E	ØG	ØG1	H			L	Øa	b	c	f
										KN	KM	KL					
EK EVO 6.2200 G-EU2N	1035	479	556	812	1056	245	200	227	277	400	520	640	215	300-340	340	M16	200
EK EVO 7.3400 G-EU2N	1106	510	597	941	1130	276	235	263	343	420	550	680	225	360-400	400	M16	235

PACKAGING

The burner is delivered on a pallet with:
- burner body with mounted combustion head
- gas train and filter
- boiler fixing accessories
- technical documentation

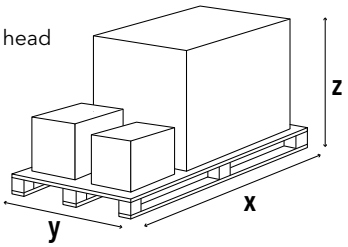

Model	Dimensions (mm)			Gross weight (kg)
	X	Y	Z	
EK EVO 6.2200 G-EU2N	2046	1414	1233	300
EK EVO 7.3400 G-EU2N	2046	1414	1233	350

EK EVO 6 G-EU2N / EK EVO 7 G-EU2N

360 ... 3720 kW
Two stage progressive/modulating electronic

PRESSURE LOSS [BURNER HEAD + GAS TRAIN] (mbar)

EK EVO 6.2200 G-EU2N

DUNGS

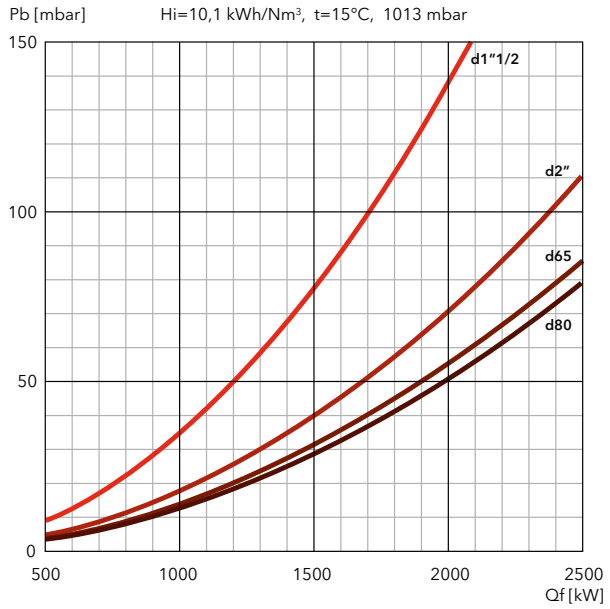

SIEMENS

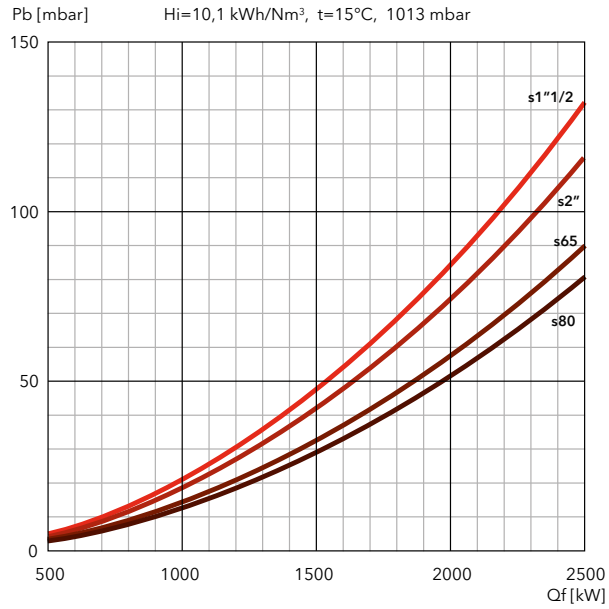

FILTERS

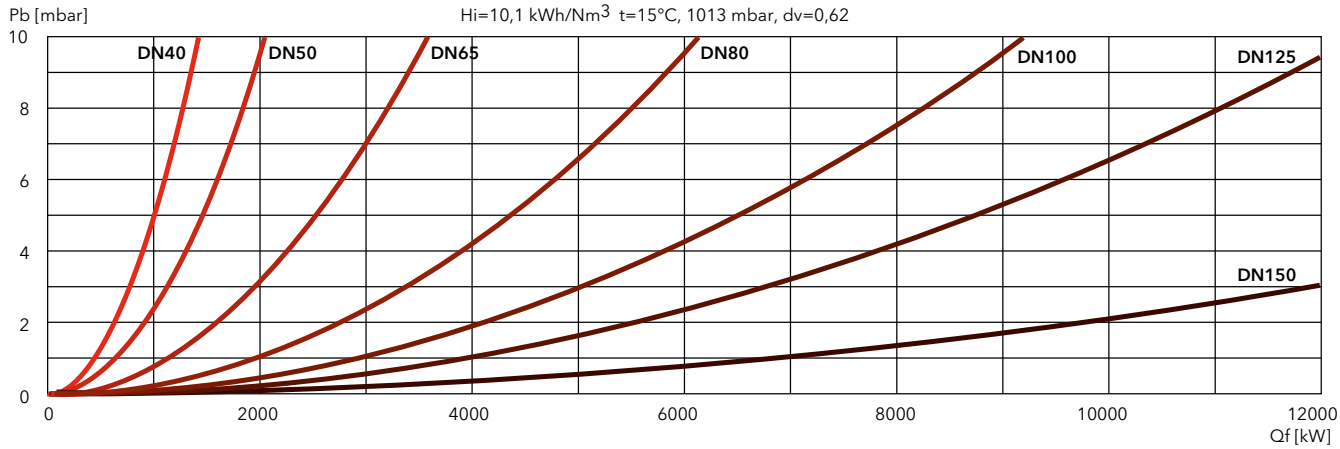

PRESSURE LOSS [BURNER HEAD + GAS TRAIN] (mbar)

EK EVO 7.3400 G-EU2N

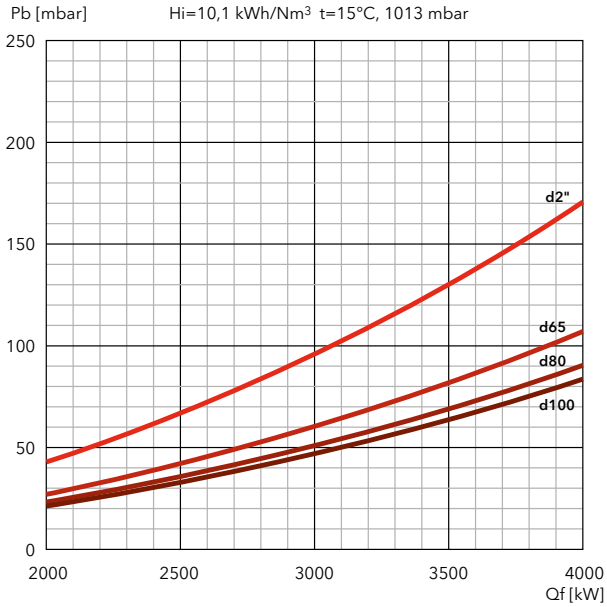

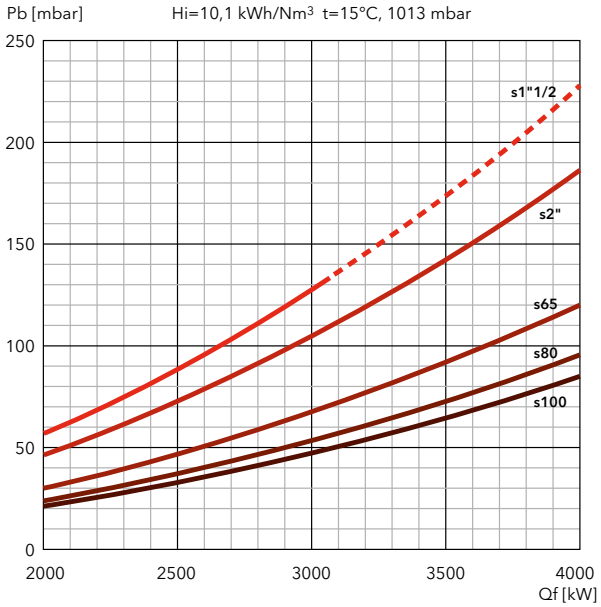

- - -: streaming noises can increase

FILTERS

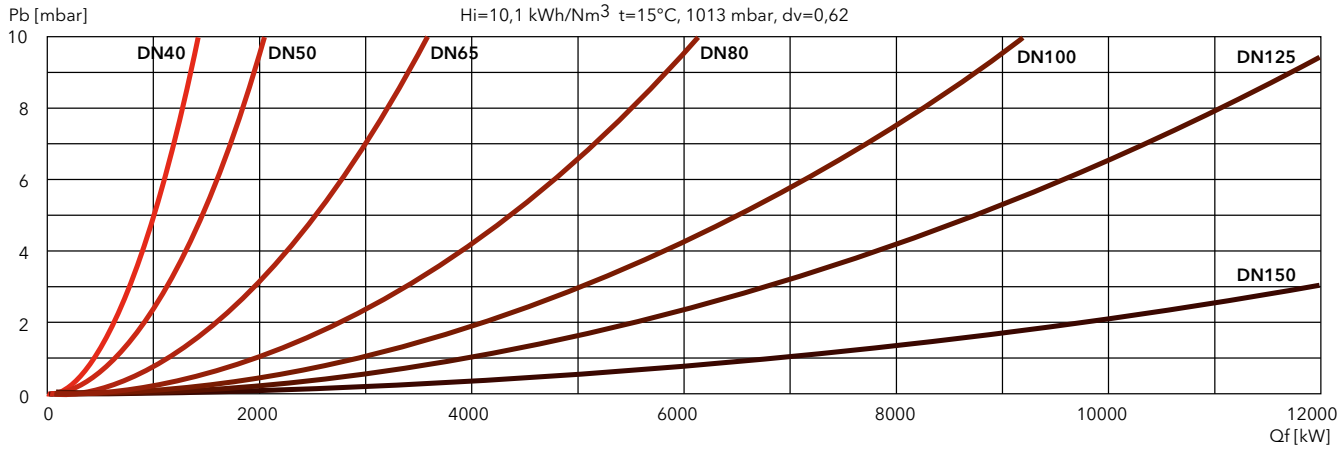

EK EVO

GAS

Low NOx Class 3

EK EVO 6 G-EU2

365 … 3050 kW
Two stage progressive/modulating electronic

- **Fuels:** natural gas, Hi = 6,99 … 11,39 kWh/Nm³;
  LPG, Hi = 25,89 kWh/Nm³
- **Emission class:** Low NOx class 3 (≤80 mg/kWh) according to EN676
- **Addtional configuration:** models with FGR System (≤30 mg/kWh) available on request
- **Protection level:** IP 41

TECHNICAL DATA

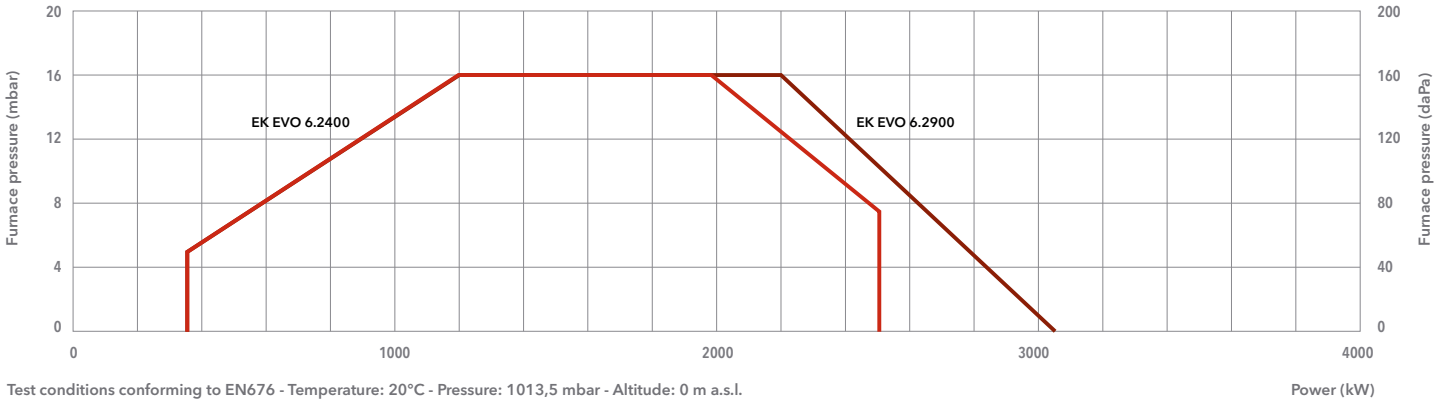

Test conditions conforming to EN676 - Temperature: 20°C - Pressure: 1013,5 mbar - Altitude: 0 m a.s.l.

		EK EVO 6.2400 G-EU2	EK EVO 6.2900 G-EU2
Operating range		365 – 2530 kW	365 – 3050 kW
Gas pressure		55 – 500 mbar (55 – 360 mbar for d452 and d453)	75 – 500 mbar (75 – 360 mbar for d452 and d453)
Gas connection		DN65	DN65
Control box / flame detector		BT300 / QRA 2	BT300 / QRA 2
Auxiliary voltage		1NPE AC 230 V – 50 Hz TN-S	1NPE AC 230 V – 50 Hz TN-S
Power supply		3PE AC 400 V – 50 Hz	3PE AC 400 V – 50 Hz
Fan motor		50 Hz – 3 kW	50 Hz – 4 kW
Acoustic level		<74 dB(A)	<77 dB(A)
CE certificate		0085CL0215	0085CL0215
Burner codes (body + head)	KN	on request	on request
	KM	on request	on request
	KL	on request	on request

GAS TRAINS

DUNGS

Model	Code
GT-d452-1"1/2 (*)	3750510
GT-d453-2" (*)	3750511
GT-d454-65	3750512
GT-d455-80	3750513

*: integrated filter

SIEMENS

Model	Code
GT-s451-1"1/2	3750525
GT-s452-2"	3750526
GT-s453-65	3750527
GT-s454-80	3750528
GT-s455-100	3750529

FILTERS

Model	Code
FG-Rp1"1/2	3757199
FG-Rp2"	3757200
FG-DN65	3757198
FG-DN80	3757201
FG-DN100	3757195

Pressure drops graphs: see following pages
Dimensions of gas trains and gas filters: see page 310

DIMENSIONS (mm)

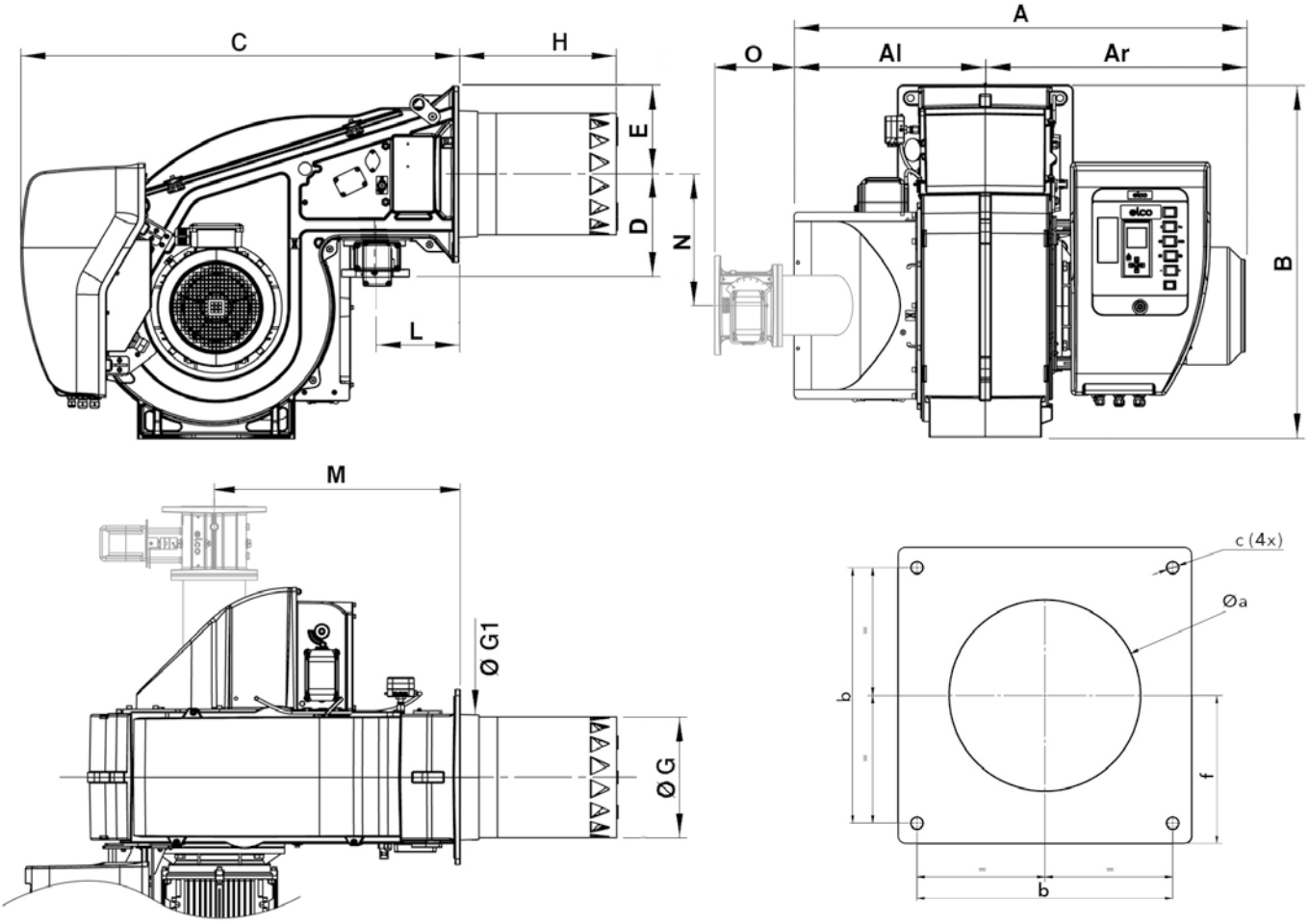

Model	A	Al	Ar	B	C	D	E	ØG	ØG1	H			L	M*	N*	O*	Øa	b	c	f
										KN	KM	KL								
EK EVO 6... G-EU2	1035	479	556	812	1048	245	200	263	277	400	520	640	215	600	302	218	300-340	340	M16	200

*: in FGR configuration

PACKAGING

The burner is delivered on a pallet with:
- burner body with mounted combustion head
- gas train and filter
- boiler fixing accessories
- technical documentation

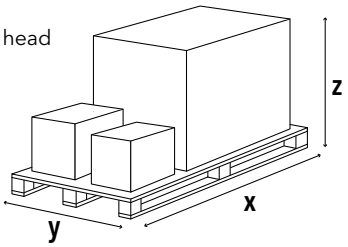

Model	Dimensions (mm)			Gross weight (kg)
	X	Y	Z	
EK EVO 6.2400 G-EU2	2046	1414	1233	300
EK EVO 6.2900 G-EU2	2046	1414	1233	350

EK EVO 6 G-EU2

365 ... 3050 kW
Two stage progressive/modulating electronic

PRESSURE LOSS [BURNER HEAD + GAS TRAIN] (mbar)

EK EVO 6.2400 G-EU2

DUNGS

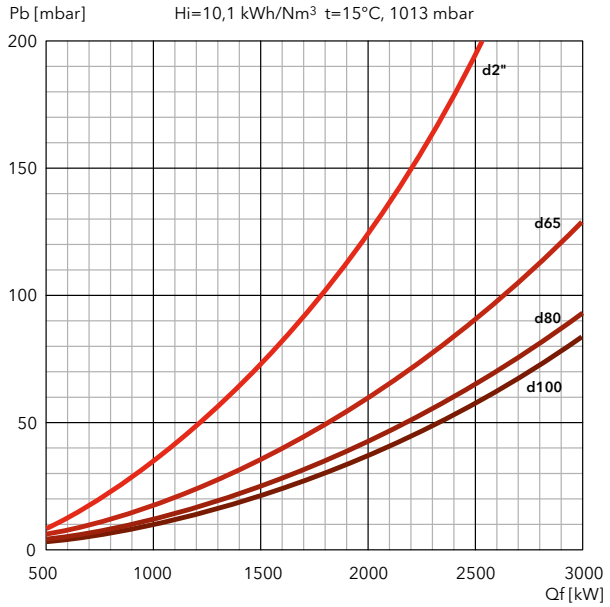

SIEMENS

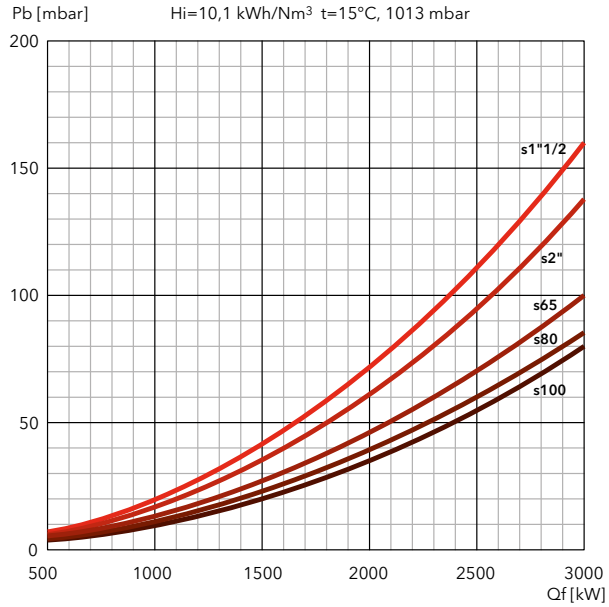

FILTERS

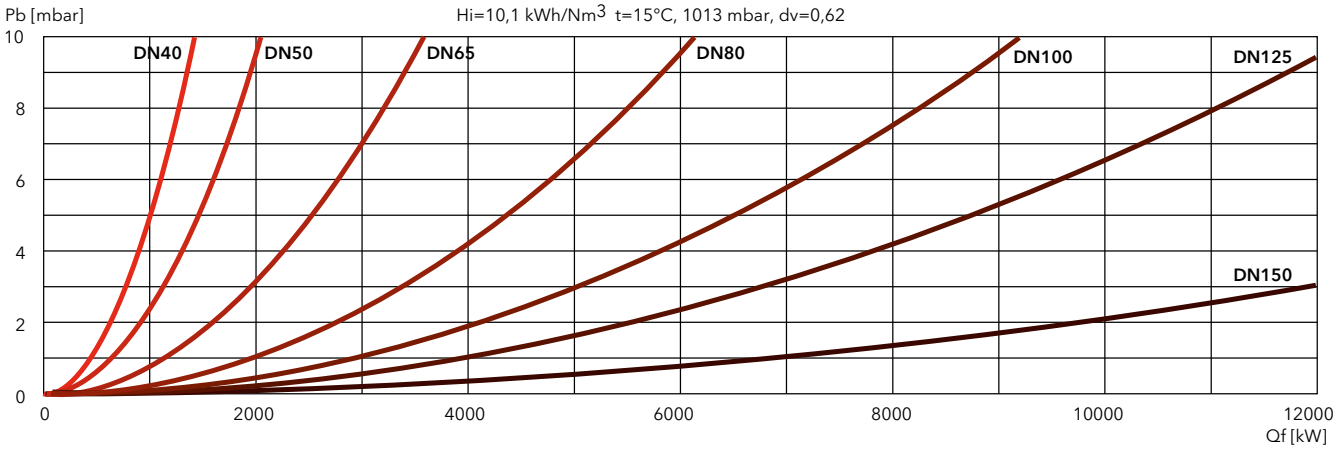

PRESSURE LOSS [BURNER HEAD + GAS TRAIN] (mbar)

EK EVO 6.2900 G-EU2

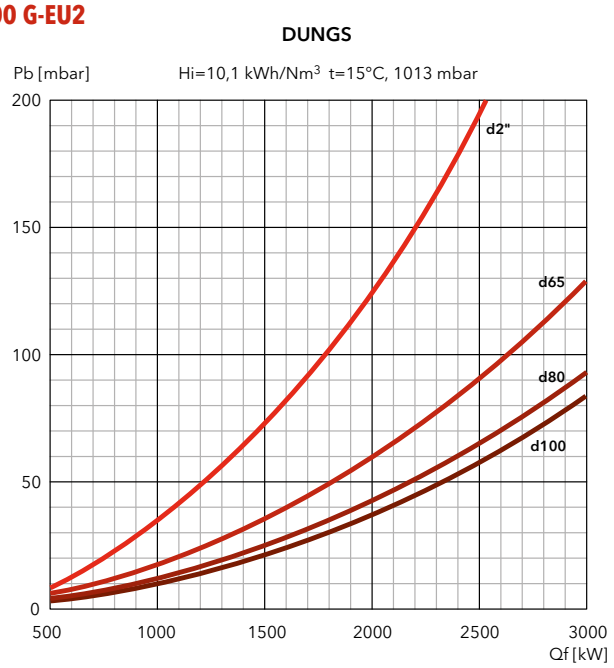

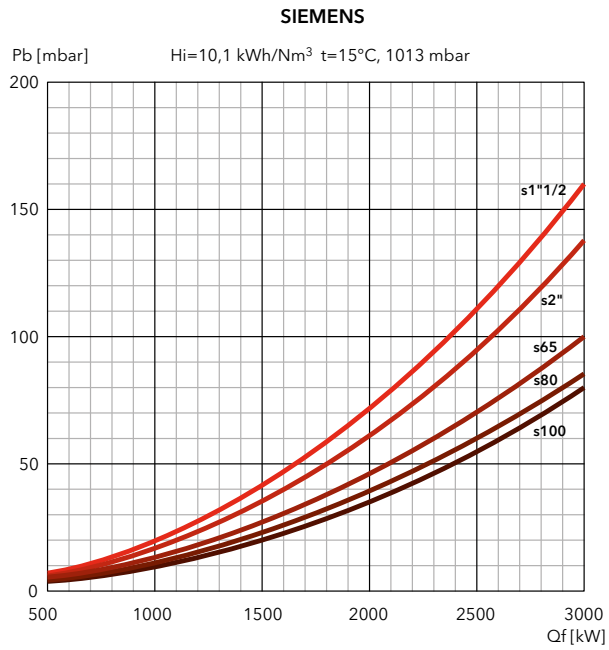

FILTERS

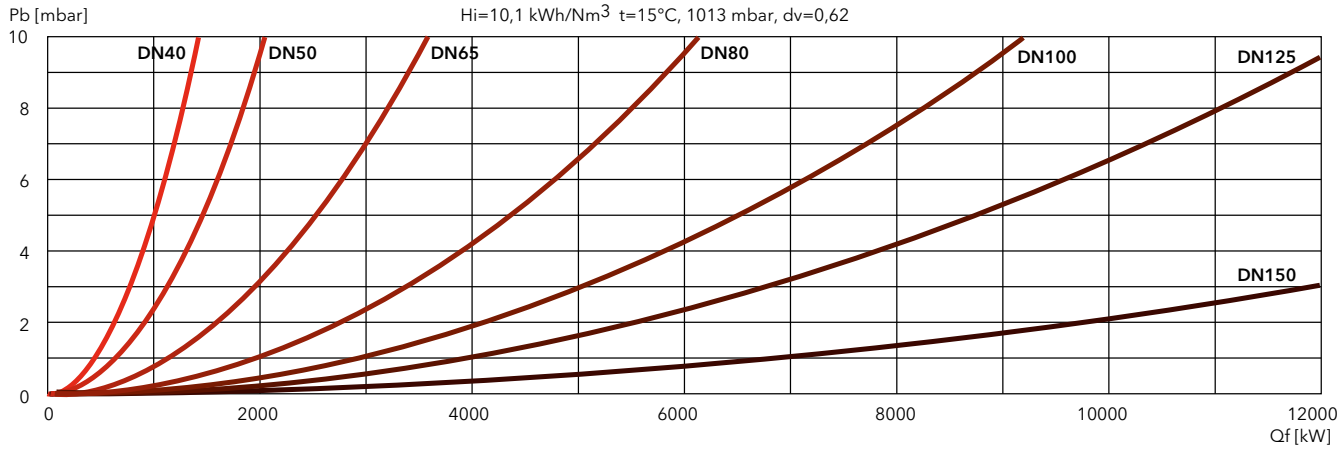

EK EVO

GAS

Low NOx Class 3

EK EVO 7 G-EU2

490 … 5850 kW
Two stage progressive/modulating electronic

- **Fuels:** natural gas, Hi = 6,99 … 11,39 kWh/Nm³;
  LPG, Hi = 25,89 kWh/Nm³
- **Emission class:** Low NOx class 3 (≤80 mg/kWh) according to EN676
- **Addtional configuration:** models with FGR System (≤30 mg/kWh) available on request
- **Protection level:** IP 41

TECHNICAL DATA

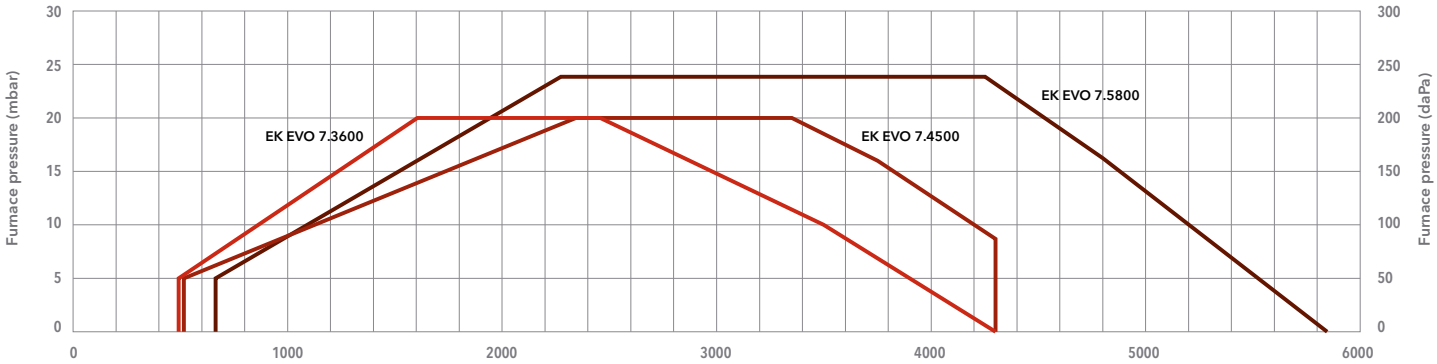

Test conditions conforming to EN676 - Temperature: 20°C - Pressure: 1013,5 mbar - Altitude: 0 m a.s.l.

Power (kW)

		EK EVO 7.3600 G-EU2	EK EVO 7.4500 G-EU2	EK EVO 7.5800 G-EU2
Operating range		490 – 4290 kW	510 – 4290 kW	630 – 5850 kW
Gas pressure		75 – 500 mbar (75 – 360 mbar for d453)	75 – 500 mbar (75 – 360 mbar for d453)	105 – 500 mbar (105 – 360 mbar for d453)
Gas connection		DN65	DN65	DN65
Control box / flame detector		BT300 / QRA2	BT300 / QRA2	BT300 / QRA2
Auxiliary voltage		1NPE AC 230 V – 50 Hz	1NPE AC 230 V – 50 Hz	1NPE AC 230 V – 50 Hz
Power supply		3PE AC 400 V – 50 Hz	3PE AC 400 V – 50 Hz	3PE AC 400 V – 50 Hz
Fan motor		50 Hz – 5,5 kW	50 Hz – 7,5 kW	50 Hz – 15 kW
Acoustic level		<81 dB(A)	<83 dB(A)	<85 dB(A)
CE certificate		0085CL0215	0085CL0215	0085CL0215
Burner codes (body + head)	KN	**on request**	**on request**	**3755338**
	KM	**on request**	**on request**	**3755339**
	KL	**on request**	**on request**	**3755340**

GAS TRAINS

DUNGS

Model	Code
GT-d453-2" (*)	3750511
GT-d454-65	3750512
GT-d455-80	3750513
GT-d456-100	3750514

*: integrated filter

SIEMENS

Model	Code
GT-s451-1"1/2	3750525
GT-s452-2"	3750526
GT-s453-65	3750527
GT-s454-80	3750528
GT-s455-100	3750529
GT-s456-125	3750530

FILTERS

Model	Code
FG-Rp1"1/2	3757199
FG-Rp2"	3757200
FG-DN65	3757198
FG-DN80	3757201
FG-DN100	3757195
FG-DN125	3757209

i **Pressure drops graphs**: see following pages
Dimensions of gas trains and gas filters: see page 310

DIMENSIONS (mm)

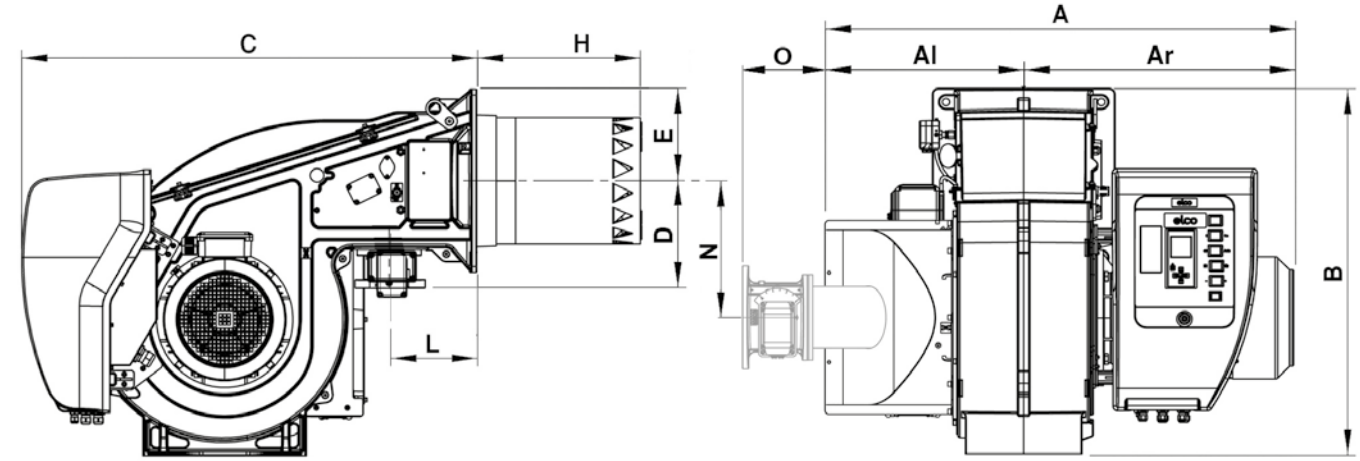

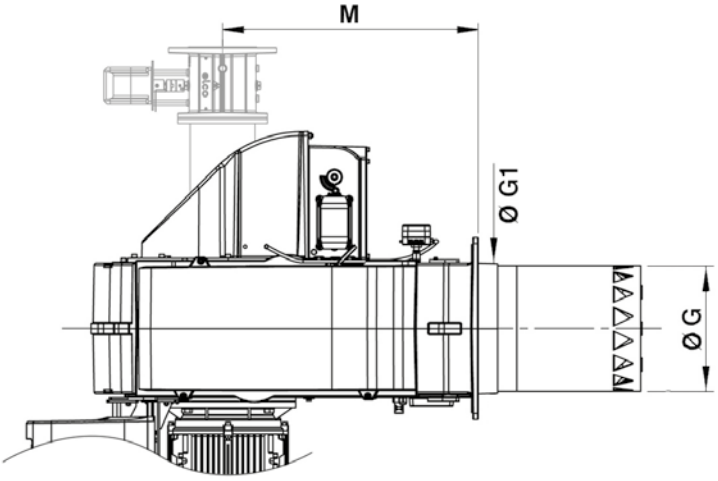

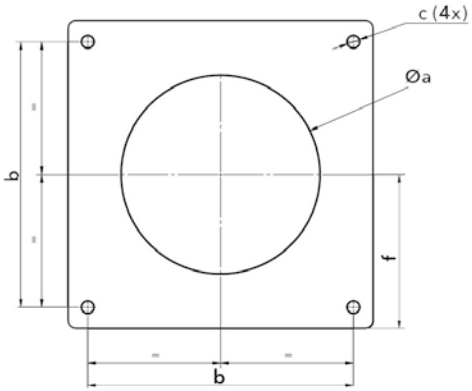

Model	A	Al	Ar	B	C	D	E	ØG	ØG1	H			L	M*	N*	O*	Øa	b	c	f
										KN	KM	KL								
EK EVO 7.3600/4500	1107	510	597	941	1122	276	235	325	343	420	550	680	225	655	356	218	360-400	400	M16	235
EK EVO 7.5800	1205	510	695	941	1168	276	235	325	343	420	550	680	225	655	356	255	360-400	400	M16	235

*: in FGR configuration

PACKAGING

The burner is delivered on a pallet with:
- burner body with mounted combustion head
- gas train and filter
- boiler fixing accessories
- technical documentation

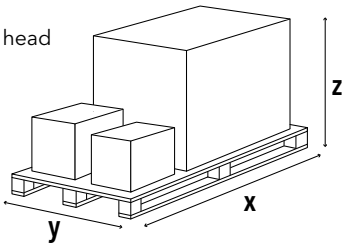

Model	Dimensions (mm)			Gross weight (kg)
	X	Y	Z	
EK EVO 7.3600 G-EU2	2046	1414	1233	350
EK EVO 7.4500 G-EU2	2046	1414	1233	350
EK EVO 7.5800 G-EU2	2046	1414	1233	350

EK EVO 7 G-EU2

630 ... 5850 kW
Two stage progressive/modulating electronic

PRESSURE LOSS [BURNER HEAD + GAS TRAIN] (mbar)

EK EVO 7.3600 G-EU2

DUNGS

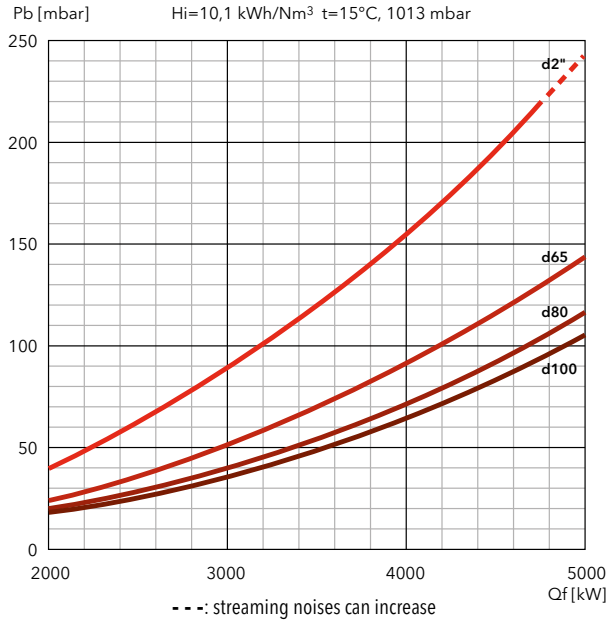

- - -: streaming noises can increase

SIEMENS

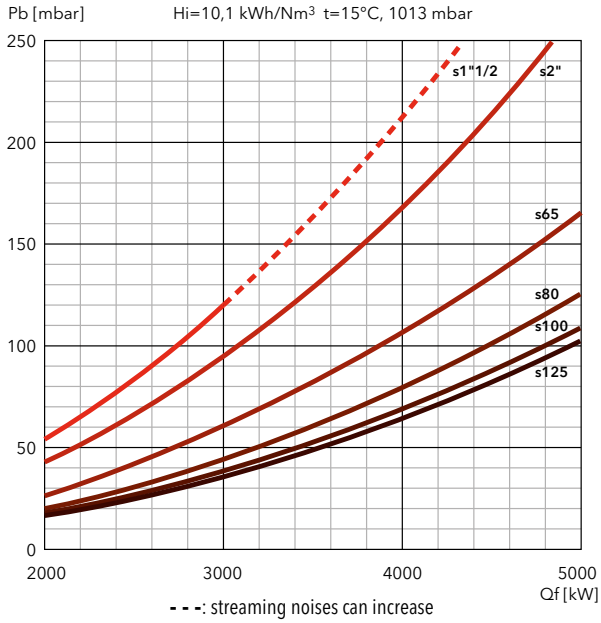

- - -: streaming noises can increase

EK EVO 7.4500 G-EU2

DUNGS

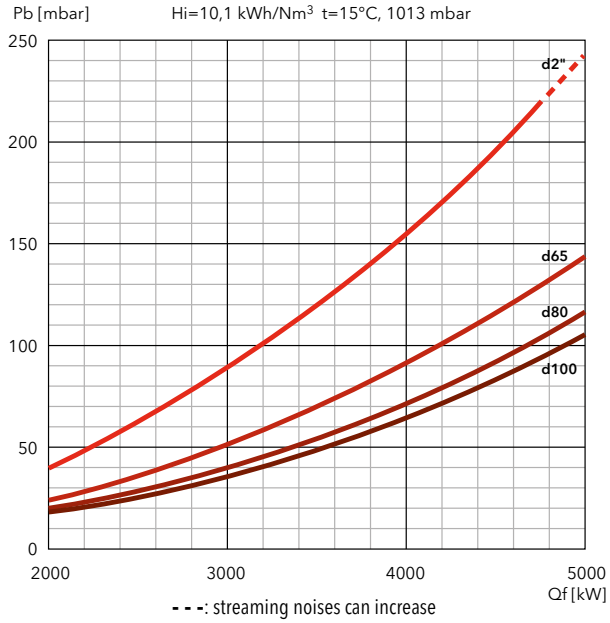

- - -: streaming noises can increase

SIEMENS

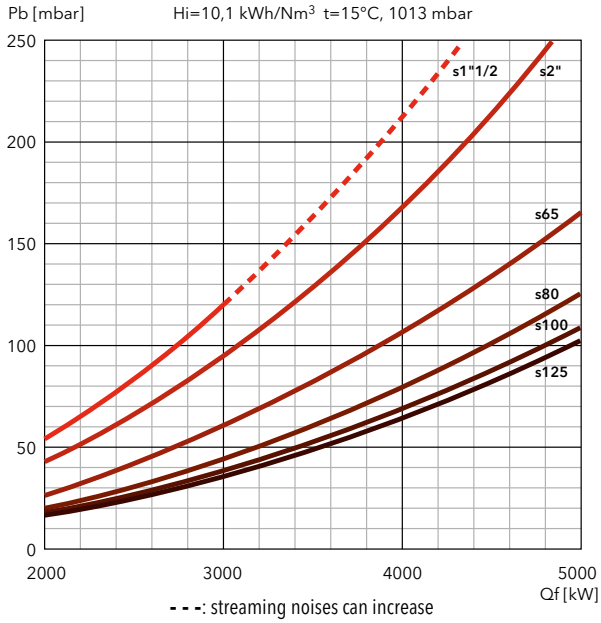

- - -: streaming noises can increase

FILTERS

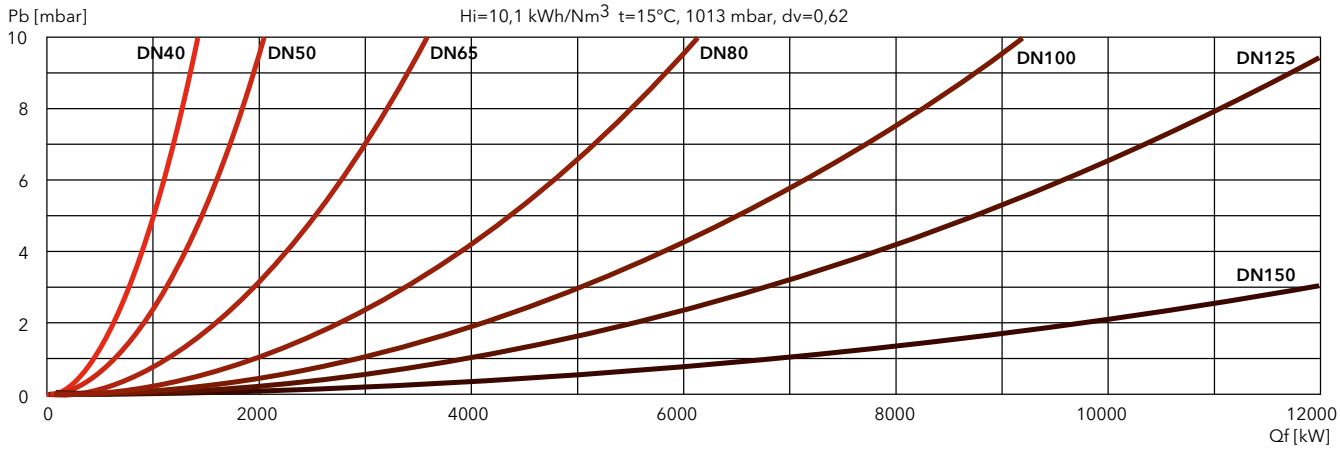

PRESSURE LOSS [BURNER HEAD + GAS TRAIN] (mbar)

EK EVO 7.5800 G-EU2

DUNGS

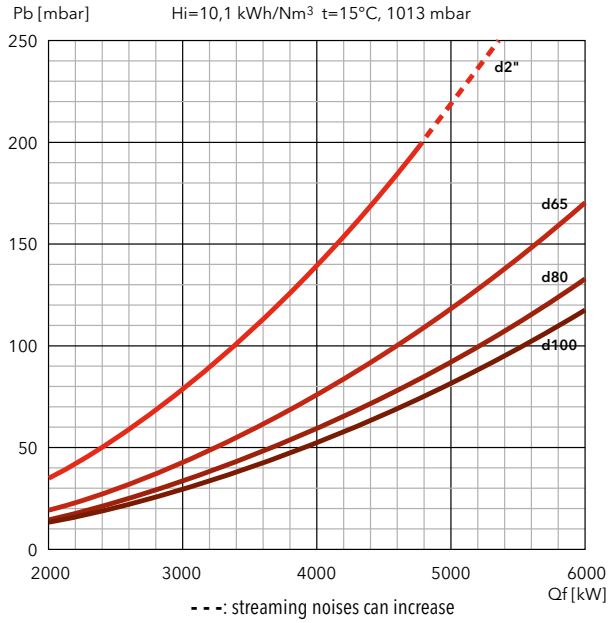

SIEMENS

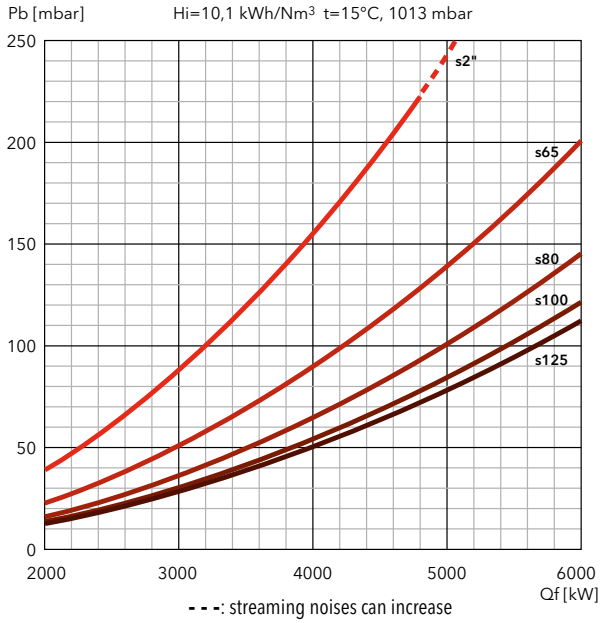

FILTERS

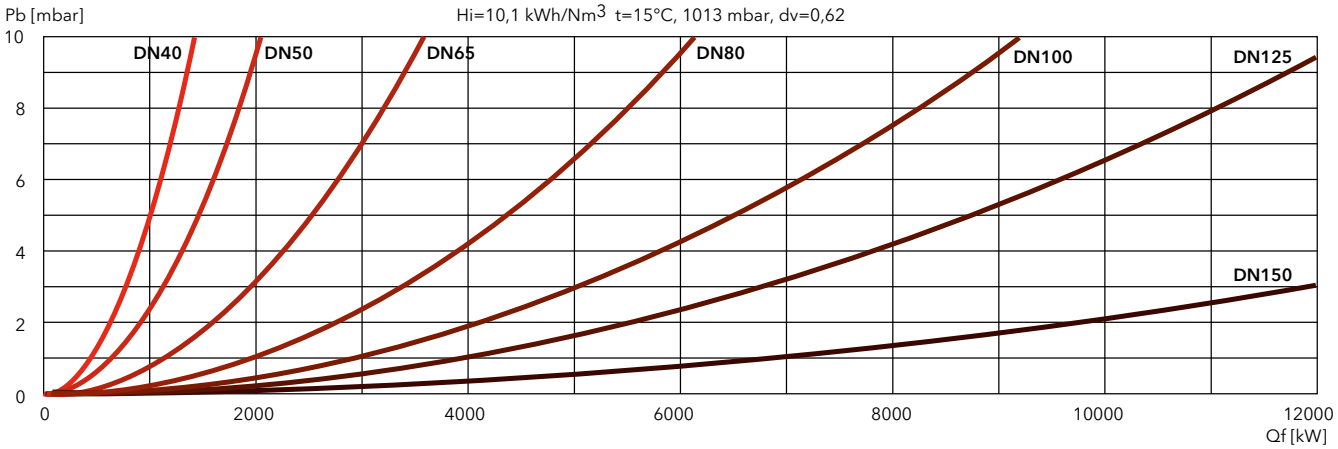

EK EVO

GAS

Low NOx Class 3

EK EVO 9 G-EU2N

1050 … 8300 kW
Two stage progressive/modulating electronic

- **Fuels:** natural gas, Hi = 6,99 … 11,39 kWh/Nm³;
  LPG, Hi = 25,89 kWh/Nm³
- **Emission class:** Low NOx class 3 (≤80 mg/kWh) according to EN676
- **Protection level:** IP 41

TECHNICAL DATA

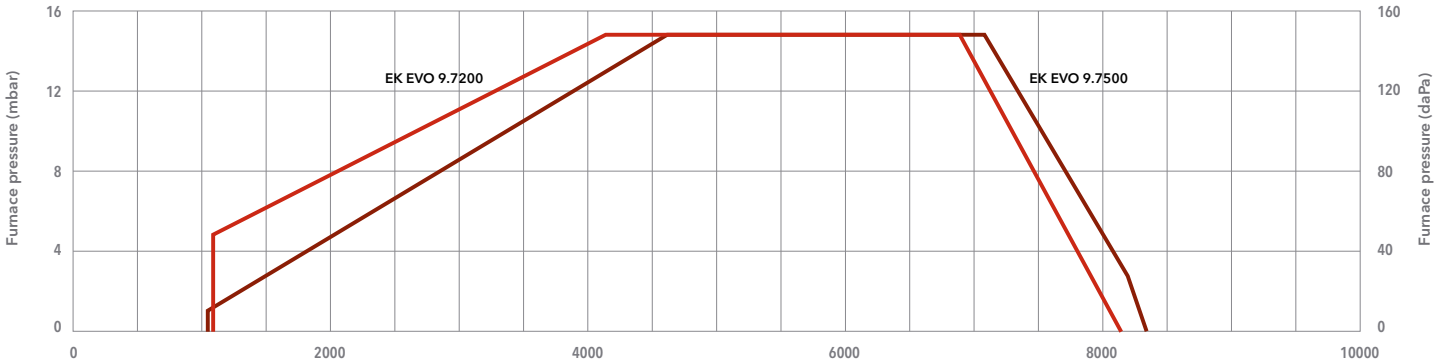

Test conditions conforming to EN676 - Temperature: 20°C - Pressure: 1013,5 mbar - Altitude: 0 m a.s.l.

		EK EVO 9.7200 G-EU2N	EK EVO 9.7500 G-EU2N
Operating range		1070 – 8020 kW	1050 – 8300 kW
Gas pressure		150 – 500 mbar	120 – 500 mbar
Gas connection		DN100	DN100
Control box / flame detector		BT300 / QRA 2	BT300 / QRA 2
Auxiliary voltage		1NPE AC 230 V – 50 Hz TN-S	1NPE AC 230 V – 50 Hz TN-S
Power supply		3PE AC 400 V – 50 Hz	3PE AC 400 V – 50 Hz
Fan motor		50 Hz – 22 kW	50 Hz – 22 kW
Acoustic level		<86 dB(A)	<86 dB(A)
CE certificate		0085CL0215	0085CL0215
Burner codes (body + head)	KN	**3754690**	**3754699**
	KM	**3754691**	**3754700**
	KL	**3754692**	**3754701**

GAS TRAINS

DUNGS

Model	Code
GT-d457-2" (*)	3750515
GT-d458-65	3750516
GT-d459-80	3750517
GT-d460-100	3750518

SIEMENS

Model	Code
GT-s458-65	3750538
GT-s459-80	3750539
GT-s460-100	3750540
GT-s461-125	3750541

FILTERS

Model	Code
FG-DN65	3757198
FG-DN80	3757201
FG-DN100	3757195
FG-DN125	3757209

*: integrated filter

Pressure drops graphs: see following pages
Dimensions of gas trains and gas filters: see page 311

DIMENSIONS (mm)

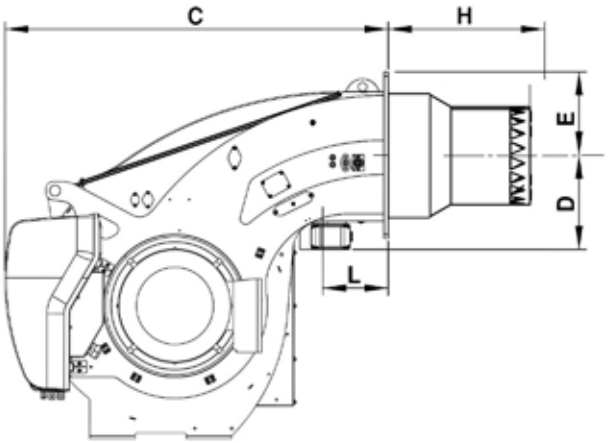

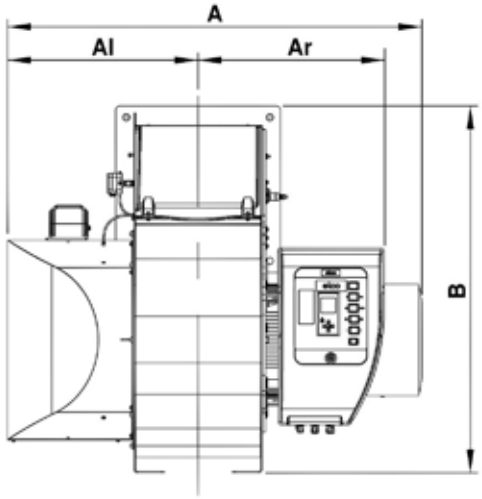

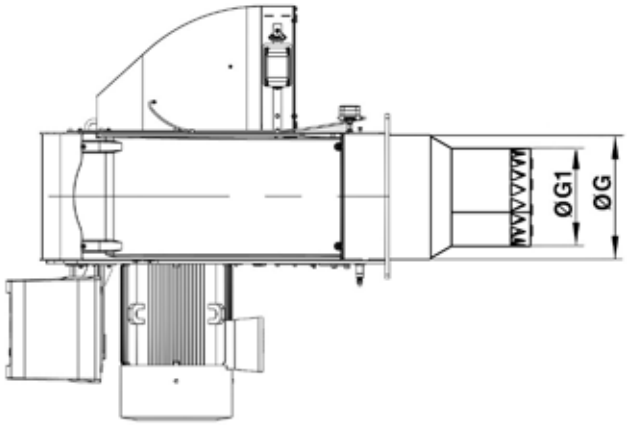

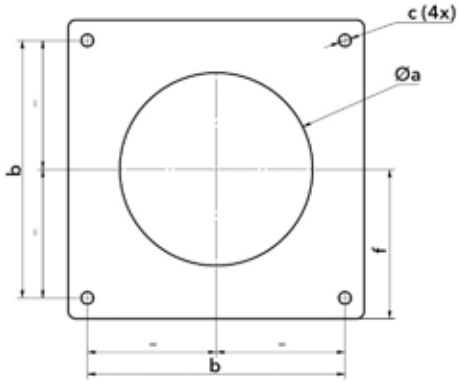

Model	A	Al	Ar	B	C	D	E	ØG	ØG1	H			L	Øa	b	c	f
										KN	KM	KL					
EK EVO 9.7200 G-EU2N	1400	670	653	1291	1353	332	293	439	346	500	640	780	230	460-480	505	M20	293
EK EVO 9.7500 G-EU2N	1400	670	653	1291	1353	332	293	439	369	550	700	850	230	460-480	505	M20	293

PACKAGING

The burner is delivered on a pallet with:
- burner body with mounted combustion head
- gas train and filter
- boiler fixing accessories
- technical documentation

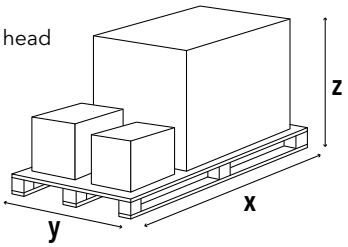

Model	Dimensions (mm)			Gross weight (kg)
	X	Y	Z	
EK EVO 9.7200 G-EU2N	2300	1500	1573	700
EK EVO 9.7500 G-EU2N	2300	1500	1573	700

EK EVO 9 G-EU2N

1050 ... 8300 kW
Two stage progressive/modulating electronic

PRESSURE LOSS [BURNER HEAD + GAS TRAIN] (mbar)

EK EVO 9.7200 G-EU2N

DUNGS

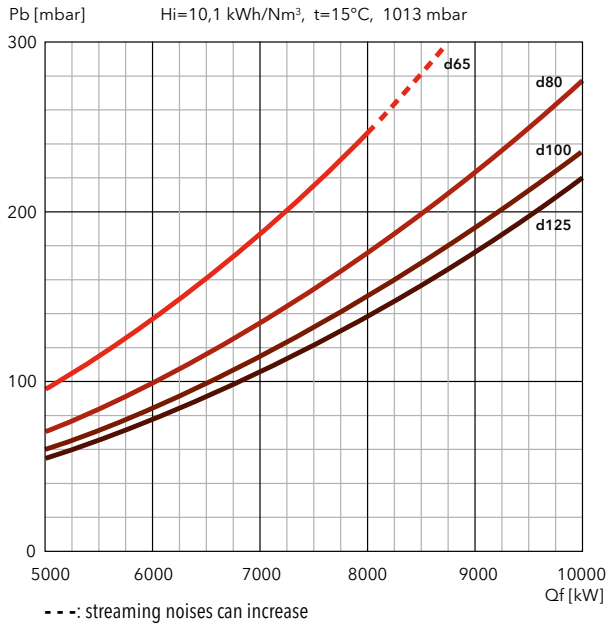

SIEMENS

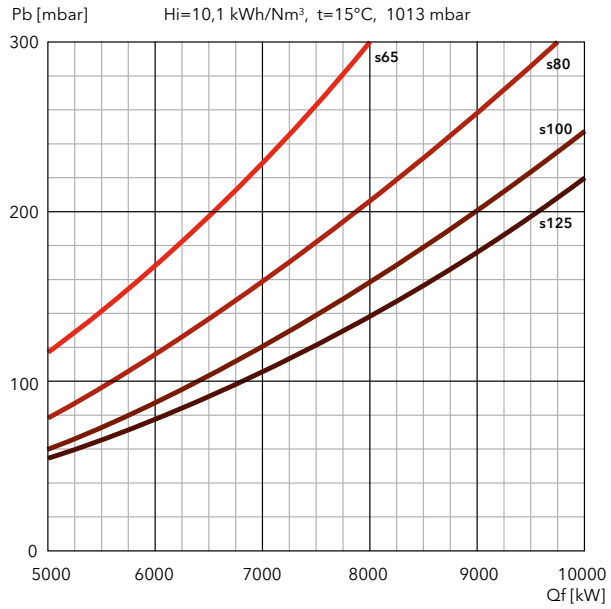

FILTERS

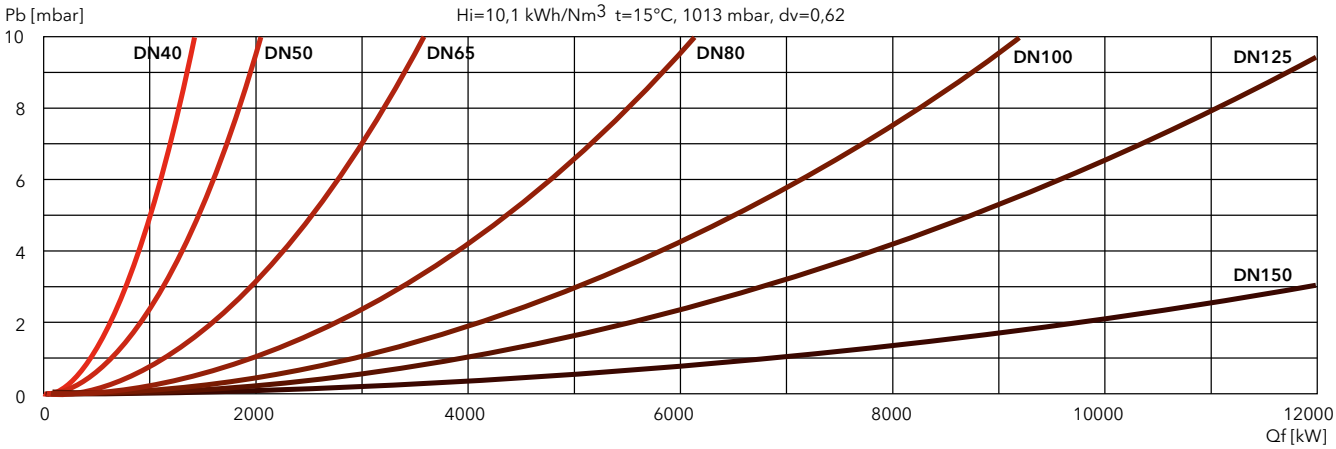

PRESSURE LOSS [BURNER HEAD + GAS TRAIN] (mbar)

EK EVO 9.7500 G-EU2N

DUNGS

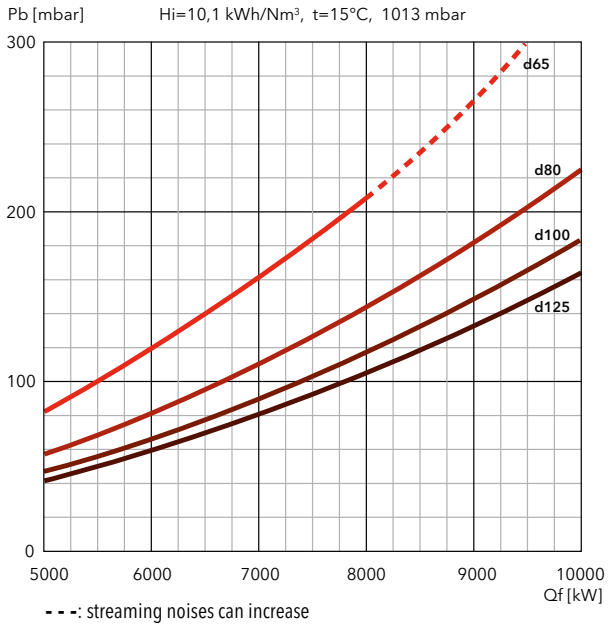

SIEMENS

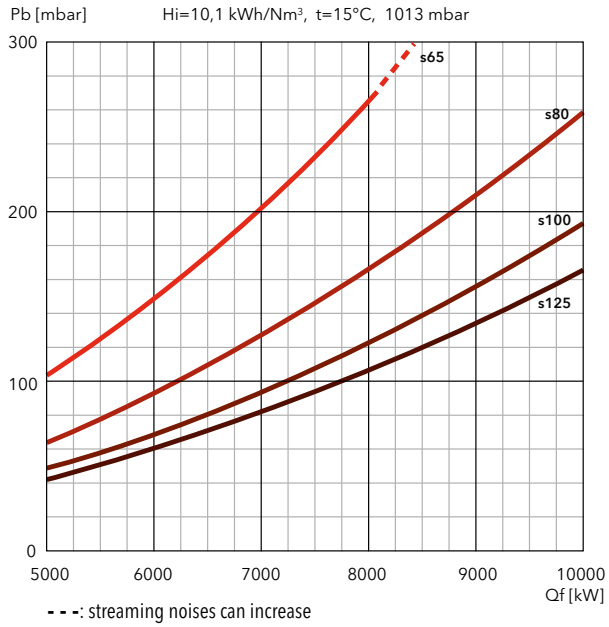

FILTERS

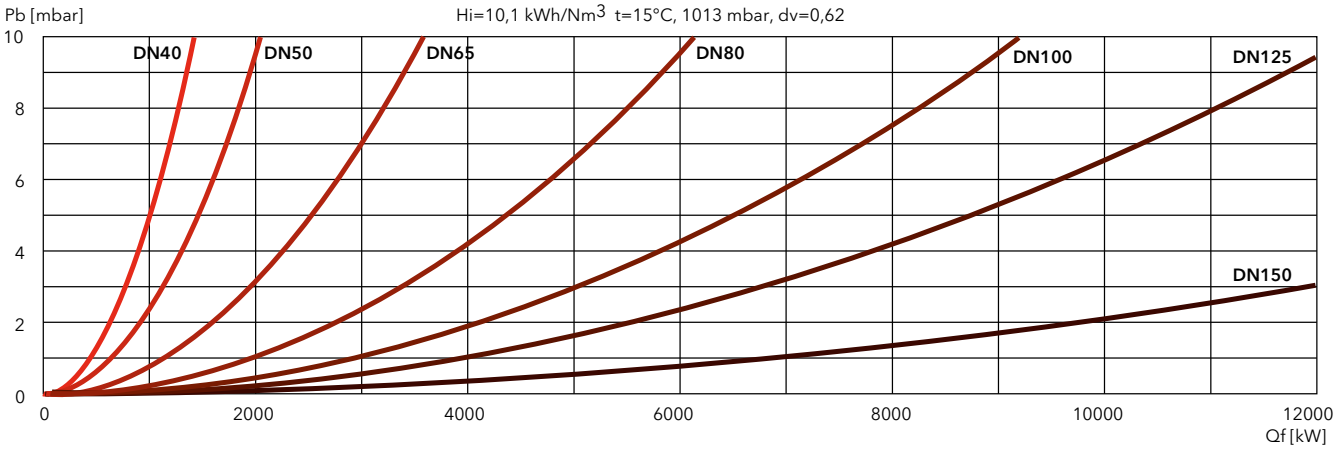

EK EVO

GAS

Low NOx Class 3

EK EVO 9 G-EU2

1700 … 13000 kW
Two stage progressive/modulating electronic

- **Fuels:** natural gas, Hi = 6,99 … 11,39 kWh/Nm³;
  LPG, Hi = 25,89 kWh/Nm³
- **Emission class:** Low NOx class 3 (≤80 mg/kWh) according to EN676
- **Addtional configuration:** models with FGR System (≤30 mg/kWh) available on request
- **Protection level:** IP 41

TECHNICAL DATA

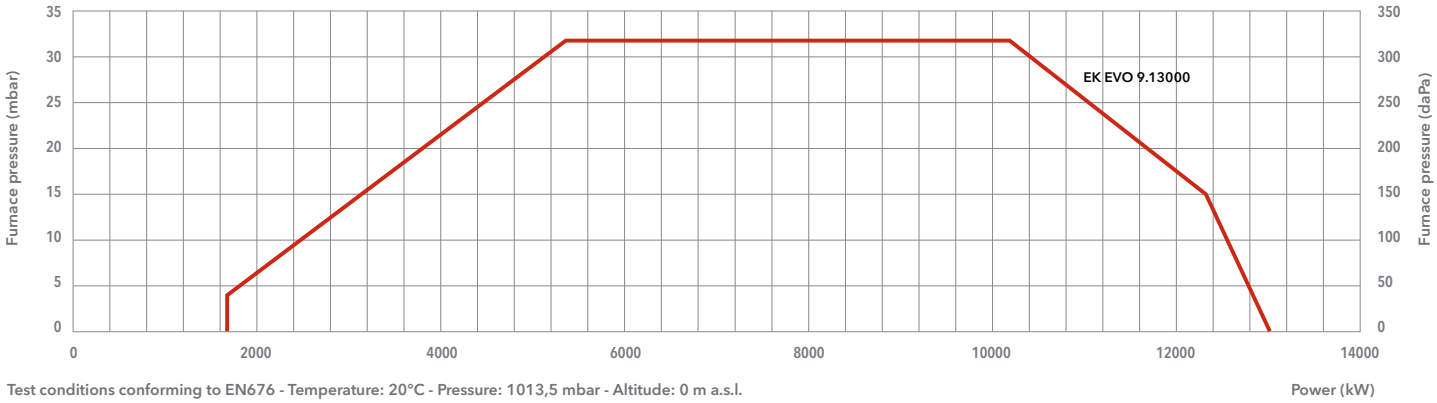

Test conditions conforming to EN676 - Temperature: 20°C - Pressure: 1013,5 mbar - Altitude: 0 m a.s.l.

		EK EVO 9.13000 G-EU2
Operating range		1700 – 13000 kW
Gas pressure		170 – 500 mbar
Gas connection		DN100
Control box / flame detector		BT300 / QRA2
Auxiliary voltage		1NPE AC 230 V – 50/60 Hz
Power supply		3PE AC 400 V – 50 Hz
Fan motor		50 Hz – 37 kW
Acoustic level		<92 dB(A)
CE certificate		0085CL0215
Burner codes (body + head)	KN	**3755498**
	KM	**3755499**
	KL	**3755500**

GAS TRAINS

DUNGS

Model	Code
GT-d459-80	3750517
GT-d460-100	3750518
GT-d125	on request

SIEMENS

Model	Code
GT-s459-80	3750539
GT-s460-100	3750540
GT-s461-125	3750541
GT-s150	on request

FILTERS

Model	Code
FG-DN80	3757201
FG-DN100	3757195
FG-DN125	3757209
FG-DN150	3757210

i **Pressure drops graphs**: see following pages
Dimensions of gas trains and gas filters: see page 311

DIMENSIONS (mm)

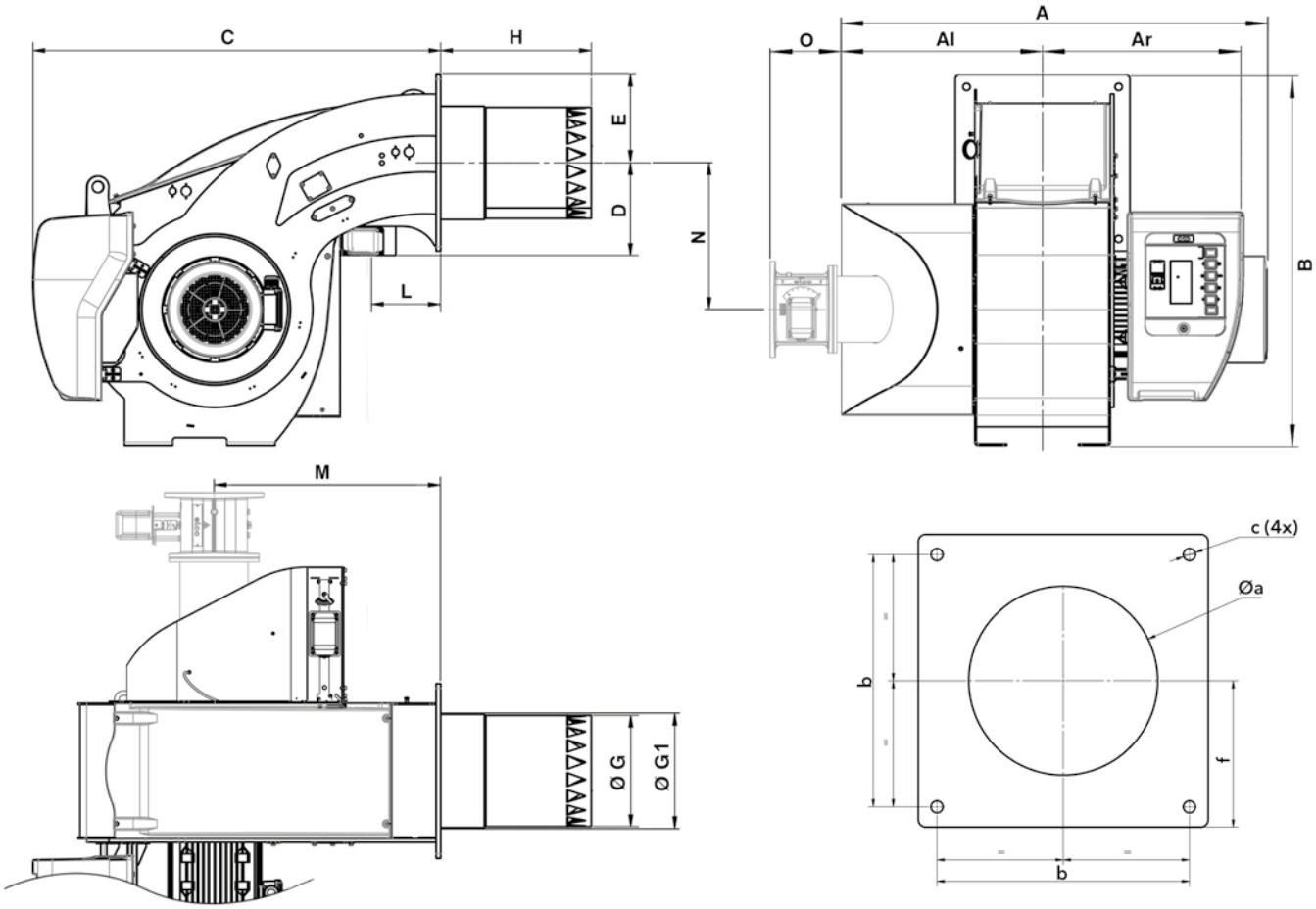

Model	A	Al	Ar	B	C	D	E	ØG	ØG1	H			L	M*	N*	O*	Øa	b	c	f
										KN	KM	KL								
EK EVO 9.13000 G-EU2	1457	670	788	1291	1348	332	293	431,5	439	550	700	850	230	750	530	291	460-480	505	M20	293

*: in FGR configuration

PACKAGING

The burner is delivered on a pallet with:
- burner body with mounted combustion head
- gas train and filter
- boiler fixing accessories
- technical documentation

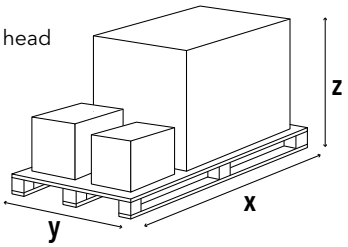

Model	Dimensions (mm)			Gross weight (kg)
	X	Y	Z	
EK EVO 9.13000 G-EU2	2300	1500	1573	700

EK EVO 9 G-EU2

1700 ... 13000 kW
Two stage progressive/modulating electronic

PRESSURE LOSS [BURNER HEAD + GAS TRAIN] (mbar)

EK EVO 9.13000 G-EU2

DUNGS

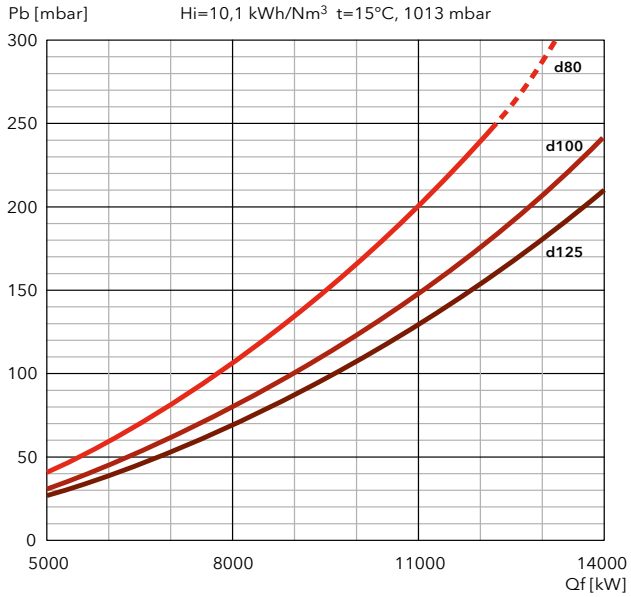

SIEMENS

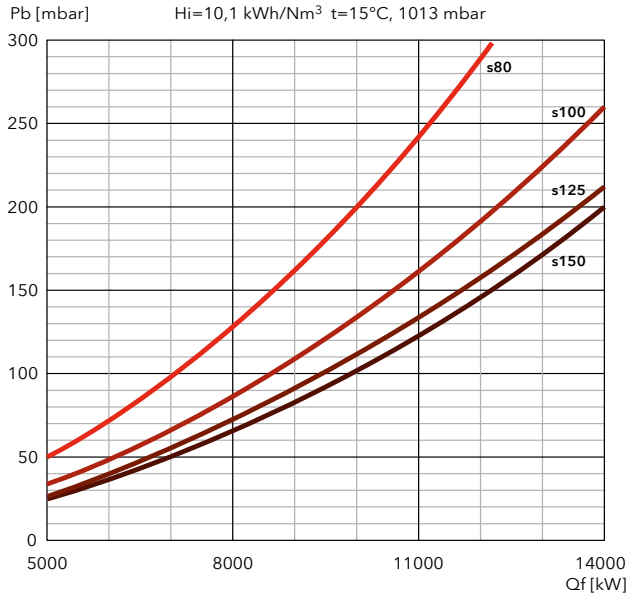

PRESSURE LOSS [BURNER HEAD + GAS TRAIN] (mbar)

FILTERS

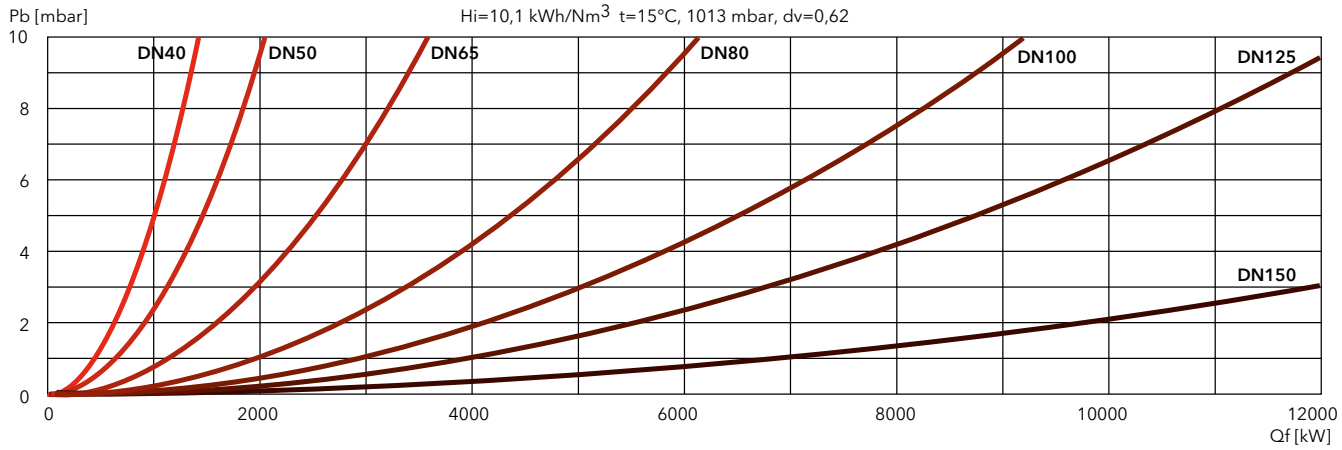

EK EVO

GAS

Low NOx Class 2

EK EVO 6 G-E / EK EVO 7 G-E

390 … 5400 kW
Two stage progressive/modulating electronic

- **Fuels:** natural gas, Hi = 6,99 … 11,39 kWh/Nm³;
  LPG, Hi = 25,89 kWh/Nm³
- **Emission class:** Low NOx class 2 (≤120 mg/kWh) according to EN676
- **Protection level:** IP 41

TECHNICAL DATA

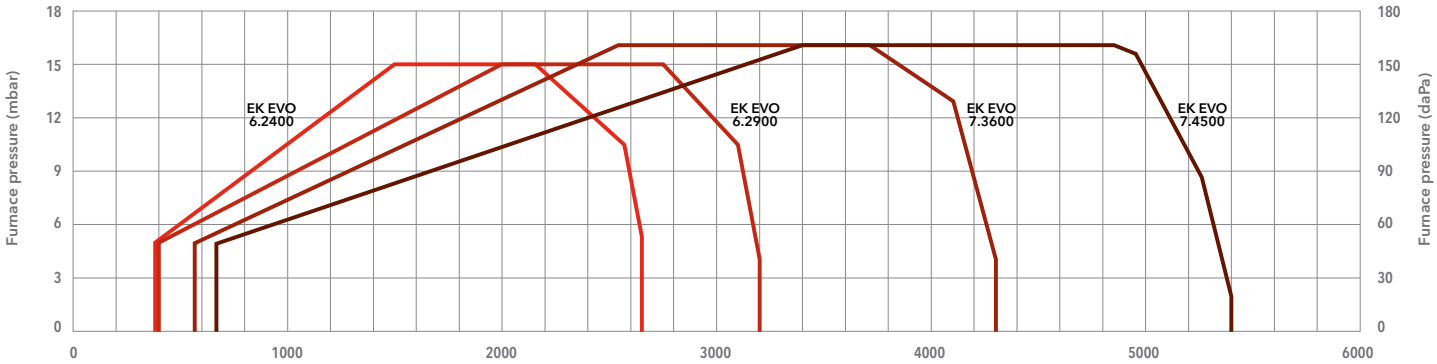

Test conditions conforming to EN676 - Temperature: 20°C - Pressure: 1013,5 mbar - Altitude: 0 m a.s.l.

Power (kW)

		EK EVO 6.2400 G-E	EK EVO 6.2900 G-E	EK EVO 7.3600 G-E	EK EVO 7.4500 G-E
Operating range		390 – 2650 kW	400 – 3200 kW	580 – 4300 kW	680 – 5400 kW
Gas pressure		50 – 500 mbar (max 360 mbar for d452 and d453 gas train)	55 – 500 mbar (max 360 mbar for d452 and d453 gas train)	60 – 500 mbar (max 360 mbar for d452 and d453 gas train)	65 – 500 mbar (max 360 mbar for d452 and d453 gas train)
Gas connection		DN65	DN65	DN65	DN65
Control box / flame detector		BT300 / Ionisation	BT300 / Ionisation	BT300 / Ionisation	BT300 / Ionisation
Auxiliary voltage		1NPE AC 230 V – 50 Hz TN-S	1NPE AC 230 V – 50 Hz TN-S	1NPE AC 230 V – 50 Hz TN-S	1NPE AC 230 V – 50 Hz TN-S
Power supply		3PE AC 400 V – 50 Hz	3PE AC 400 V – 50 Hz	3PE AC 400 V – 50 Hz	3PE AC 400 V – 50 Hz
Fan motor		50 Hz – 3 kW	50 Hz – 4 kW	50 Hz – 5,5 kW	50 Hz – 7,5 kW
Acoustic level		<75 dB(A)	<77 dB(A)	<81 dB(A)	<82,5 dB(A)
CE certificate		0085CL0215	0085CL0215	0085CL0215	0085CL0215
Burner codes (body + head)	**KN**	**3752745**	**3752746**	**3752747**	**3752748**
	KM	**3752749**	**3752750**	**3752751**	**3752752**
	KL	**3752753**	**3752754**	**3752755**	**3752756**

GAS TRAINS

DUNGS

Model	Code
GT-d452-1"1/2 (*)	3750510
GT-d453-2" (*)	3750511
GT-d454-65	3750512
GT-d455-80	3750513
GT-d456-100	3750514

*: integrated filter

SIEMENS

Model	Code
GT-s451-1"1/2	3750525
GT-s452-2"	3750526
GT-s453-65	3750527
GT-s454-80	3750528
GT-s455-100	3750529
GT-s456-125	3750530

FILTERS

Model	Code
FG-Rp1"1/2	3757199
FG-Rp2"	3757200
FG-DN65	3757198
FG-DN80	3757201
FG-DN100	3757195
FG-DN125	3757209

Pressure drops graphs: see following pages
Dimensions of gas trains and gas filters: see page 310

DIMENSIONS (mm)

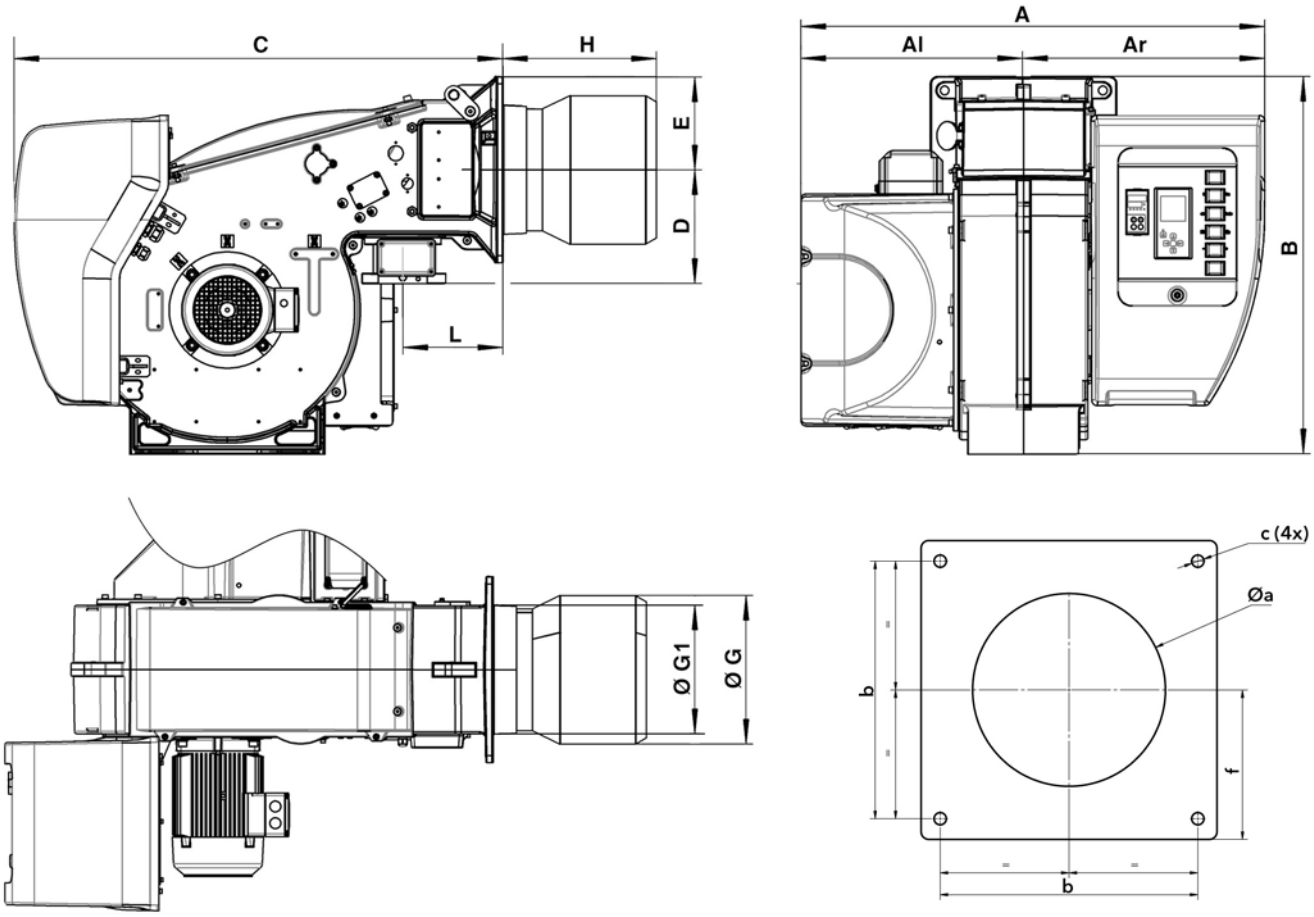

Model	A	Al	Ar	B	C	D	E	ØG	ØG1	H			L	Øa	b	c	f
										KN	KM	KL					
EK EVO 6... G-E	1035	479	556	812	1054	245	200	320	277	330	450	570	215	330-340	340	M16	200
EK EVO 7... G-E	1096	510	597	941	1120	276	235	368	338,5	375	505	635	225	380-400	400	M16	235

PACKAGING

The burner is delivered on a pallet with:
- burner body with mounted combustion head
- gas train and filter
- boiler fixing accessories
- technical documentation

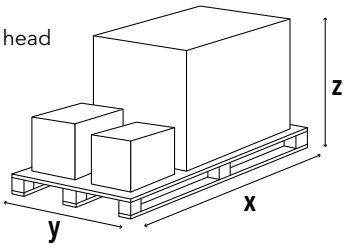

Model	Dimensions (mm)			Gross weight (kg)
	X	Y	Z	
EK EVO 6.2400 G-E	2046	1414	1233	300
EK EVO 6.2900 G-E	2046	1414	1233	300
EK EVO 7.3600 G-E	2046	1414	1233	350
EK EVO 7.4500 G-E	2046	1414	1233	350

EK EVO 6 G-E / EK EVO 7 G-E

390 ... 5400 kW
Two stage progressive/modulating electronic

PRESSURE LOSS [BURNER HEAD + GAS TRAIN] (mbar)

EK EVO 6.2400 G-E

DUNGS

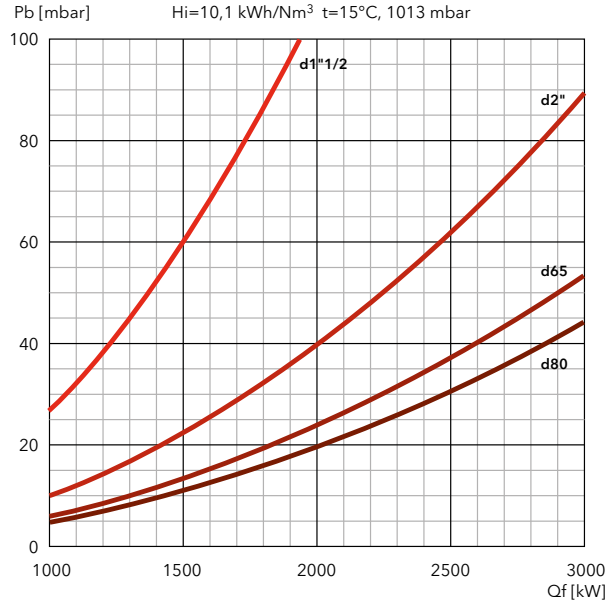

SIEMENS

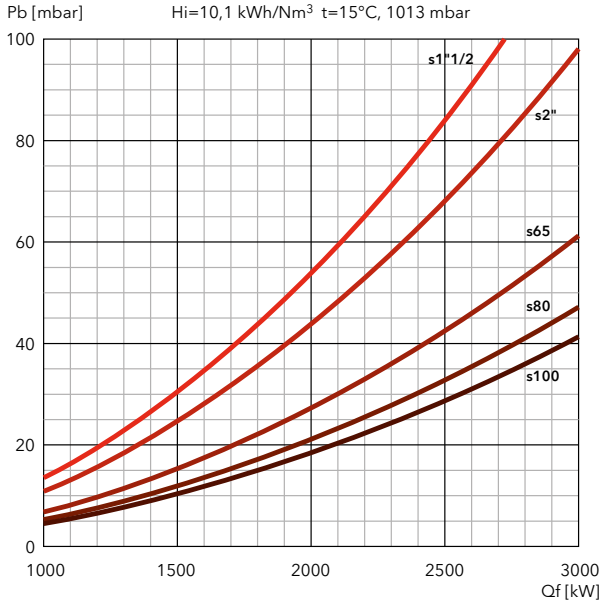

EK EVO 6.2900 G-E

DUNGS

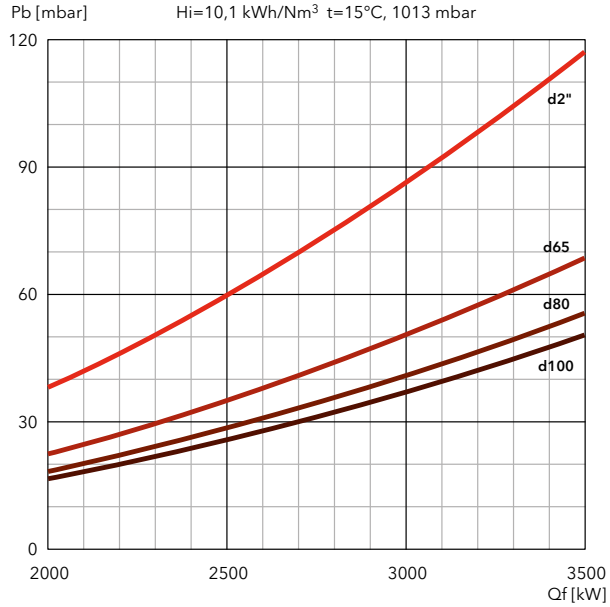

SIEMENS

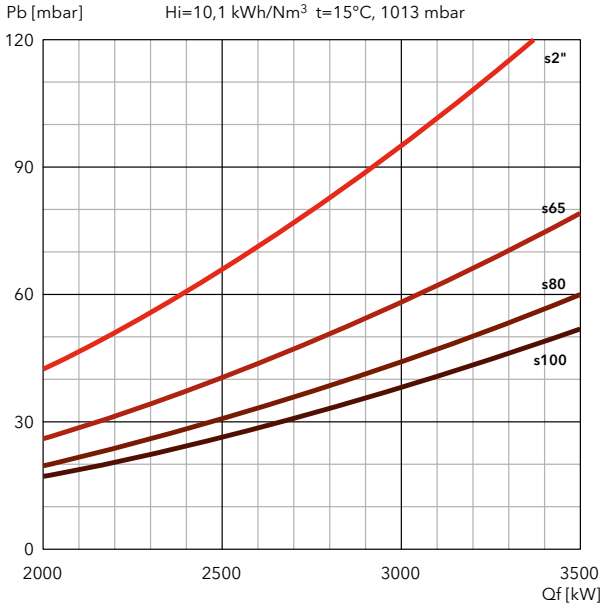

FILTERS

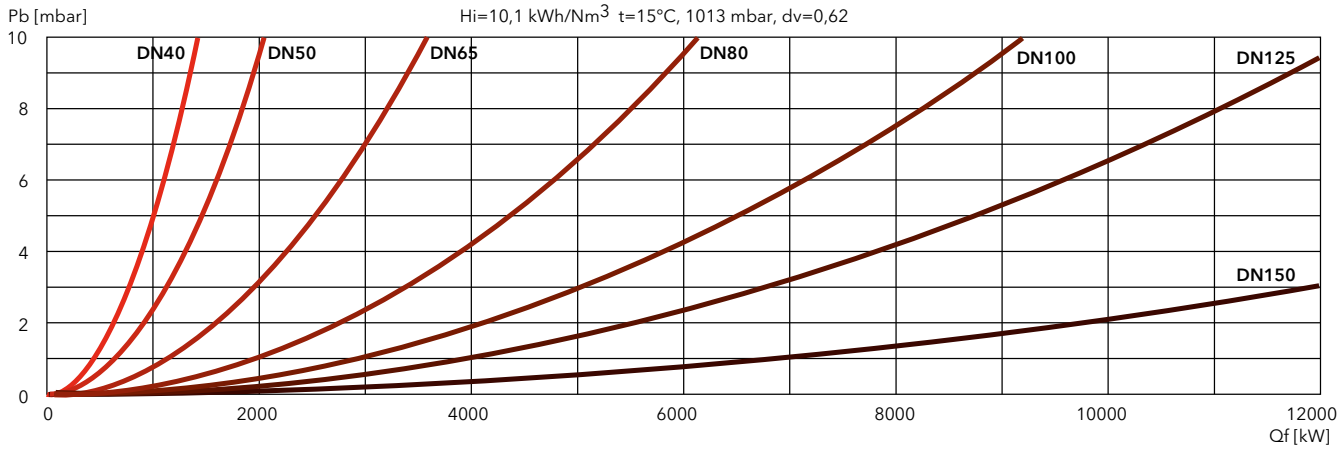

PRESSURE LOSS [BURNER HEAD + GAS TRAIN] (mbar)

EK EVO 7.3600 G-E

DUNGS

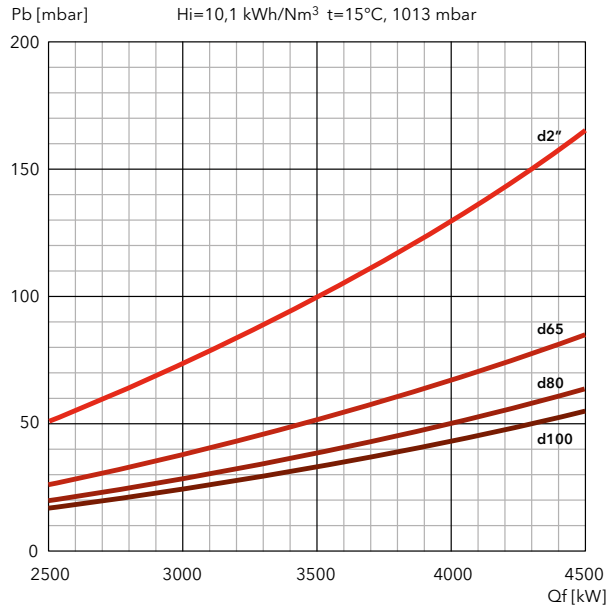

SIEMENS

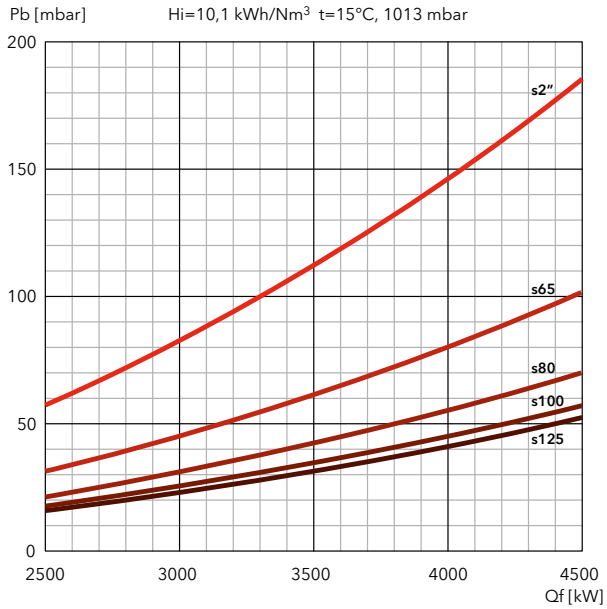

EK EVO 7.4500 G-E

DUNGS

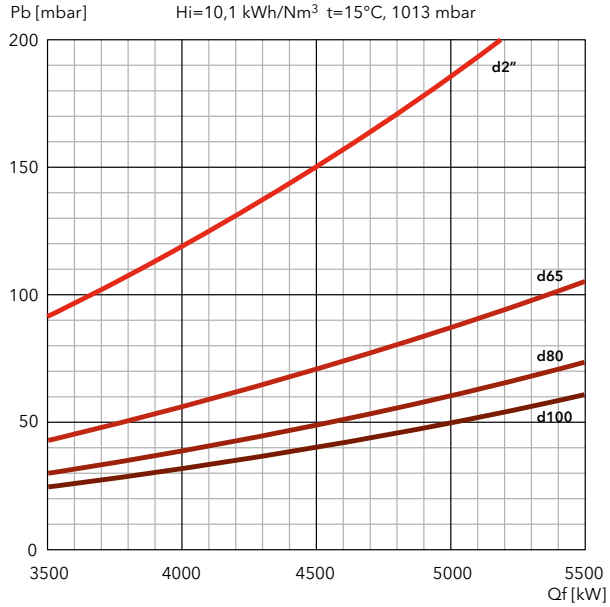

SIEMENS

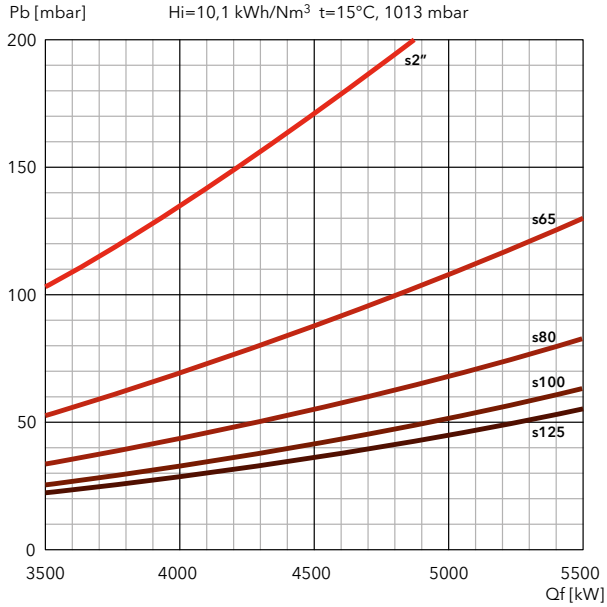

FILTERS

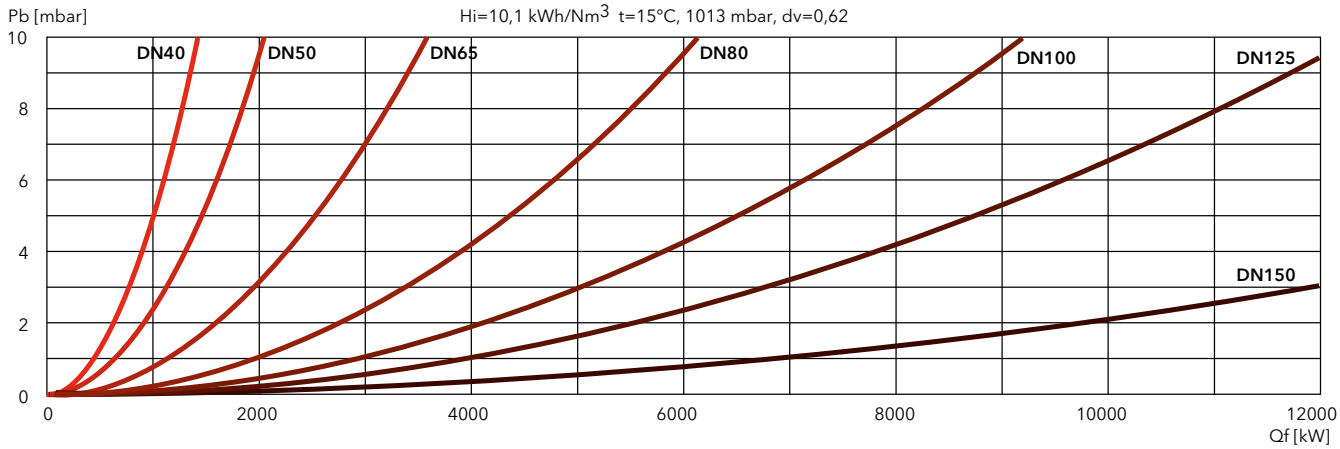

EK EVO

GAS

Low NOx Class 2

EK EVO 8 G-E / EK EVO 9 G-E

610 … 11230 kW
Two stage progressive/modulating electronic

- **Fuels:** natural gas, Hi = 6,99 … 11,39 kWh/Nm³;
  LPG, Hi = 25,89 kWh/Nm³
- **Emission class:** Low NOx class 2 (≤120 mg/kWh) according to EN676
- **Modulating ratio:** 1:10
- **Protection level:** IP 41

TECHNICAL DATA

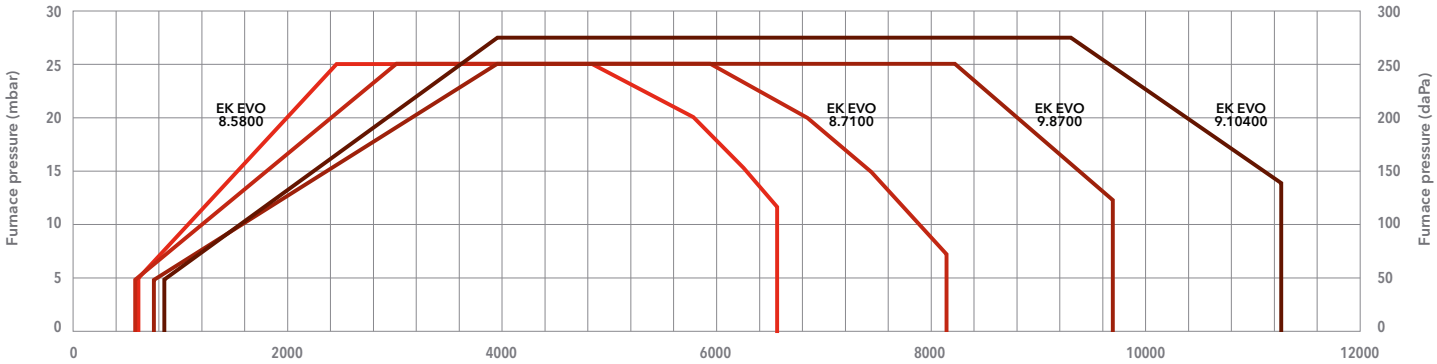

Test conditions conforming to EN676 - Temperature: 20°C - Pressure: 1013,5 mbar - Altitude: 0 m a.s.l.

Power (kW)

		EK EVO 8.5800 G-E	EK EVO 8.7100 G-E	EK EVO 9.8700 G-E	EK EVO 9.10400 G-E
Operating range		620 – 6570 kW	610 – 8150 kW	780 – 9700 kW	850 – 11230 kW
Gas pressure		60 – 500 mbar (60 – 360 mbar for d457)		70 – 500 mbar (70 – 360 mbar for d457)	
Gas connection		DN100	DN100	DN100	DN100
Control box / flame detector		BT300 / Ionisation	BT300 / Ionisation	BT300 / Ionisation	BT300 / Ionisation
Auxiliary voltage		1NPE AC 230 V – 50 Hz TN-S	1NPE AC 230 V – 50 Hz TN-S	1NPE AC 230 V – 50 Hz TN-S	1NPE AC 230 V – 50 Hz TN-S
Power supply		3PE AC 400 V – 50 Hz	3PE AC 400 V – 50 Hz	3PE AC 400 V – 50 Hz	3PE AC 400 V – 50 Hz
Fan motor		50 Hz – 11 kW	50 Hz – 15 kW	50 Hz – 18,5 kW	50 Hz – 22 kW
Acoustic level		<80,3 dB(A)	<81 dB(A)	<84,8 dB(A)	<86,3 dB(A)
CE certificate		0085CL0215	0085CL0215	0085CL0215	0085CL0215
Burner codes (body + head)	KN	**3753965**	**3753966**	**3753967**	**3753968**
	KM	**3753974**	**3753975**	**3753976**	**3753977**
	KL	**3753982**	**3753983**	**3753984**	**3753985**

GAS TRAINS

DUNGS

Model	Code
GT-d457-2" (*)	3750515
GT-d458-65	3750516
GT-d459-80	3750517
GT-d460-100	3750518

*: integrated filter

SIEMENS

Model	Code
GT-s457-2"	3750537
GT-s458-65	3750538
GT-s459-80	3750539
GT-s460-100	3750540
GT-s461-125	3750541

FILTERS

Model	Code
FG-Rp2"	3757200
FG-DN65	3757198
FG-DN80	3757201
FG-DN100	3757195
FG-DN125	3757209

i **Pressure drops graphs**: see following pages
Dimensions of gas trains and gas filters: see page 311

DIMENSIONS (mm)

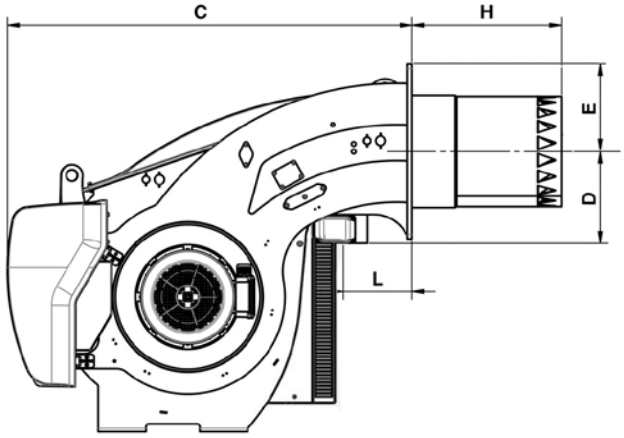

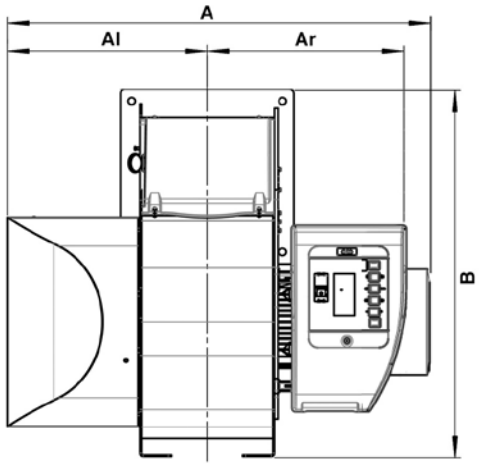

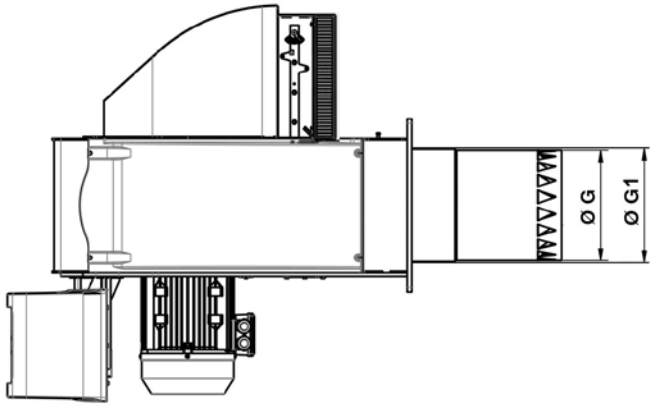

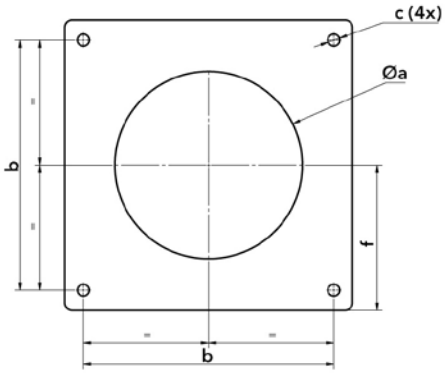

Model	A	Al	Ar	B	C	D	E	ØG	ØG1	H			L	Øa	b	c	f
										KN	KM	KL					
EK EVO 8.5800 G-E	1323	670	653	1231	1353	307	293	369	376	500	540	780	230	385-410	505	M20	293
EK EVO 8.7100 G-E	1323	670	653	1231	1353	307	293	369	376	500	540	780	230	385-410	505	M20	293
EK EVO 9.8700 G-E	1326	670	656	1291	1350	332	293	431,5	438,5	550	700	850	230	450-480	505	M20	293
EK EVO 9.10400 G-E	1326	670	656	1291	1350	332	293	431,5	438,5	550	700	850	230	450-480	505	M20	293

PACKAGING

The burner is delivered on a pallet with:
- burner body with mounted combustion head
- gas train and filter
- boiler fixing accessories
- technical documentation

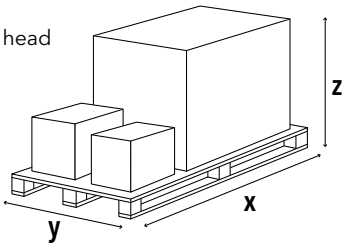

Model	Dimensions (mm)			Gross weight (kg)
	X	Y	Z	
EK EVO 8.5800 G-E	2300	1500	1573	580
EK EVO 8.7100 G-E	2300	1500	1573	580
EK EVO 9.8700 G-E	2300	1500	1573	700
EK EVO 9.10400 G-E	2300	1500	1573	700

EK EVO 8 G-E / EK EVO 9 G-E

610 ... 11230 kW
Two stage progressive/modulating electronic

PRESSURE LOSS [BURNER HEAD + GAS TRAIN] (mbar)

EK EVO 8.5800 G-E

DUNGS

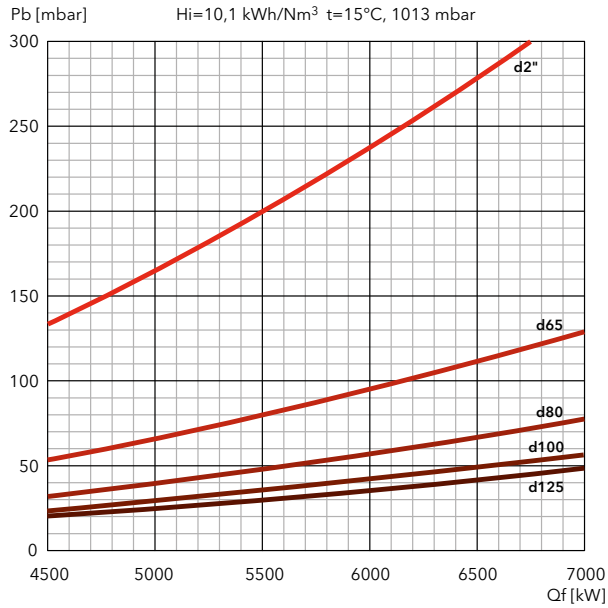

SIEMENS

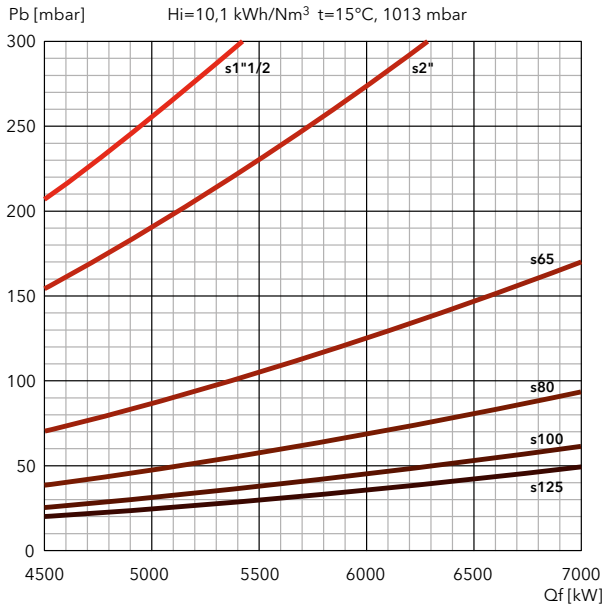

EK EVO 8.7100 G-E

DUNGS

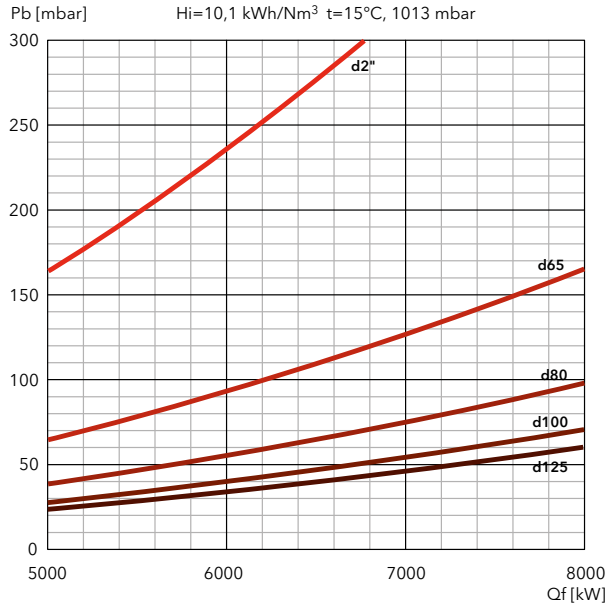

SIEMENS

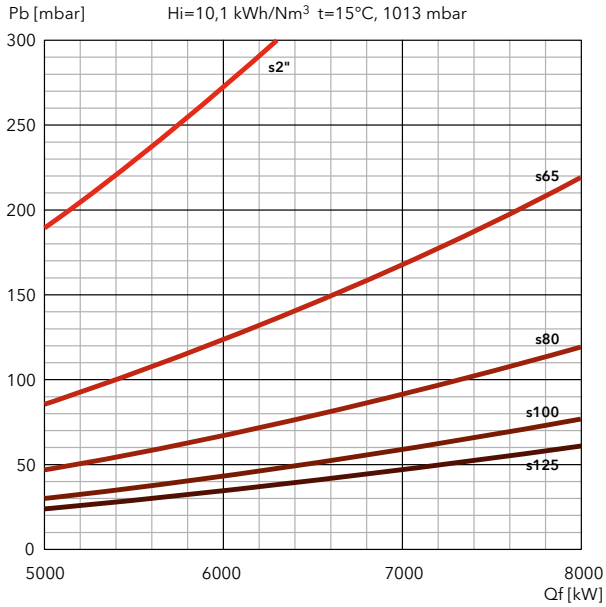

FILTERS

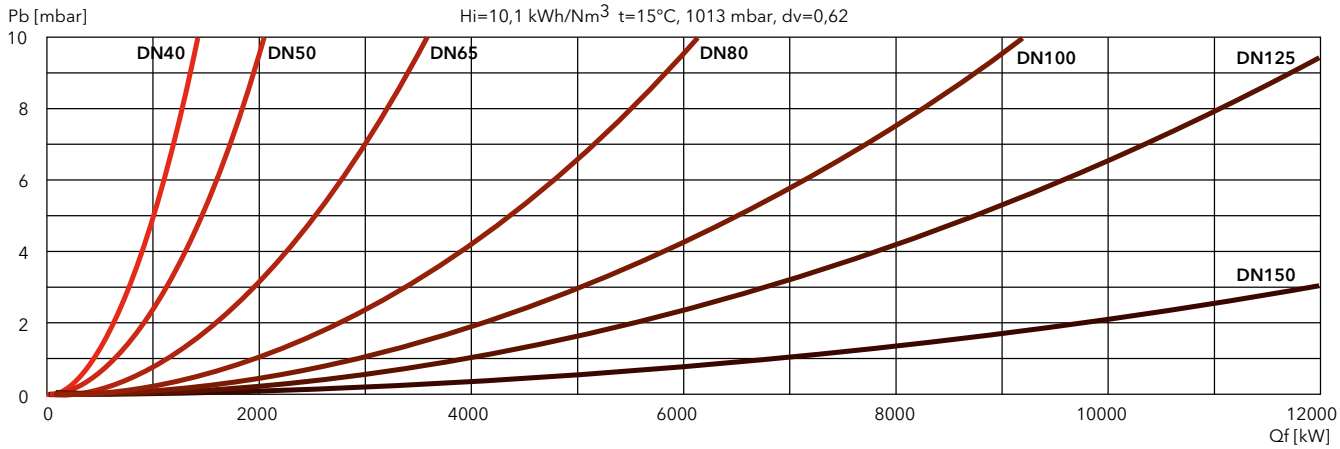

PRESSURE LOSS [BURNER HEAD + GAS TRAIN] (mbar)

EK EVO 9.8700 G-E

DUNGS

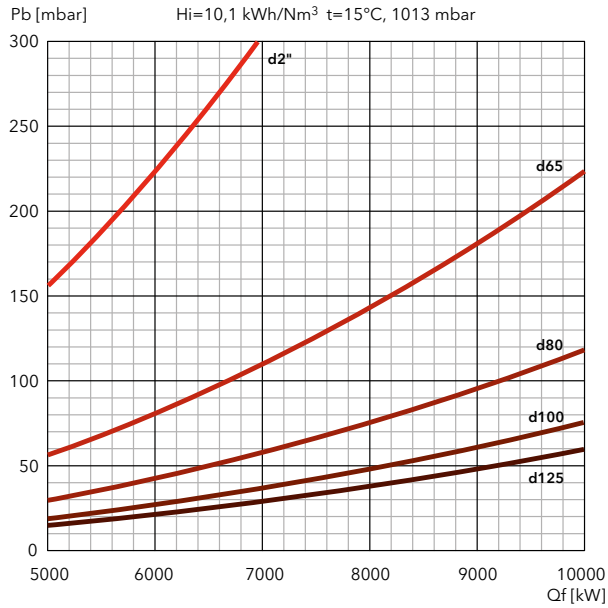

SIEMENS

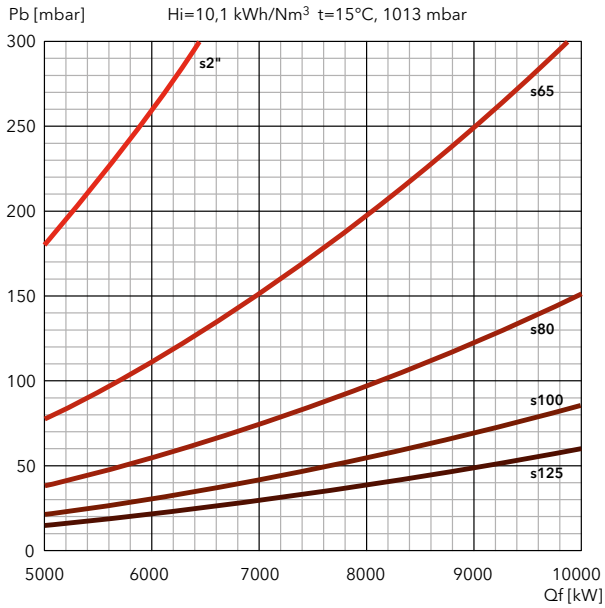

EK EVO 9.10400 G-E

DUNGS

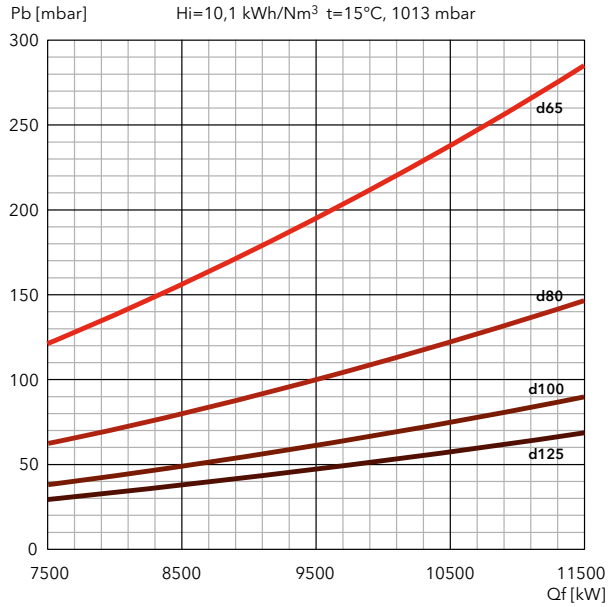

SIEMENS

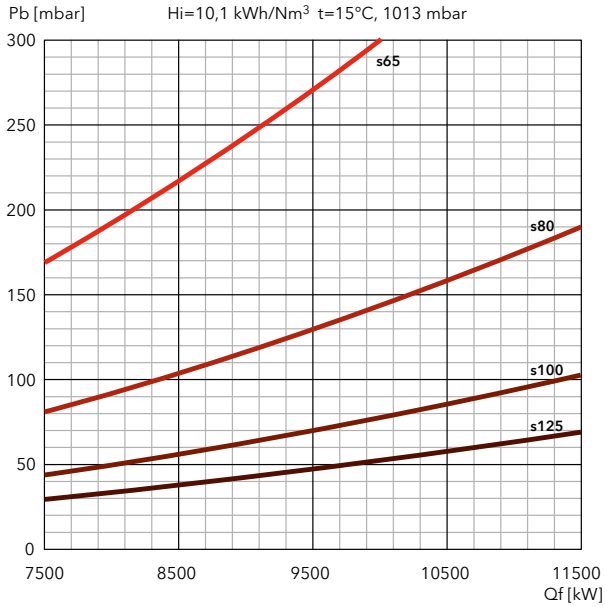

FILTERS

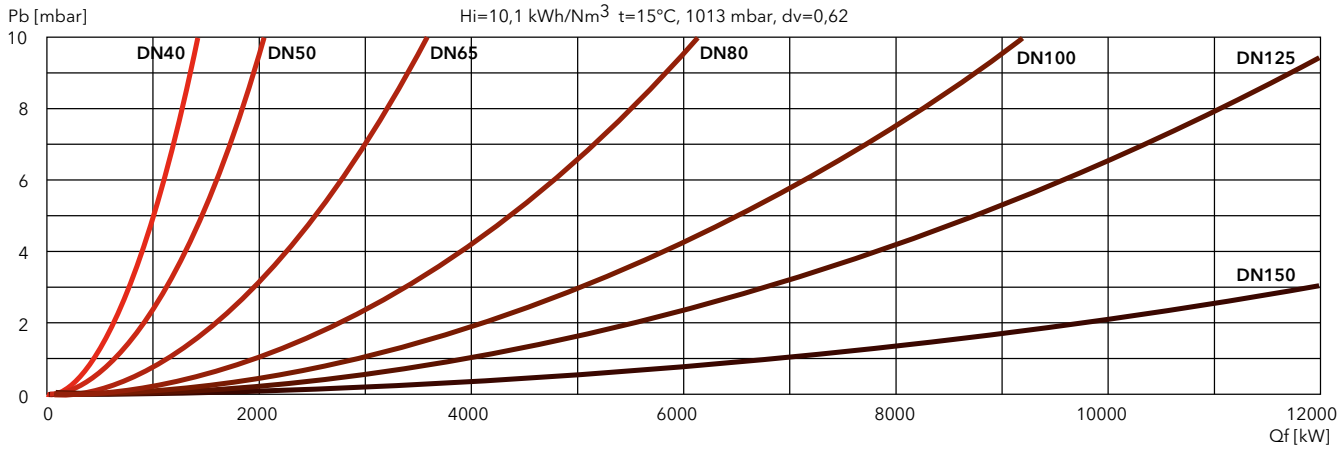

EK EVO

GAS / LIGHT OIL

Low NOx Class 3

EK EVO 6 GL-EF3 / EK EVO 7 GL-EF3

280 … 4500 kW

Two stage progressive/modulating electronic in gas and in light oil

- **Fuels:** natural gas, Hi = 6,99 … 11,39 kWh/Nm³;
  light oil, viscosity 6 mm²/s at 20°C, Hi = 11,86 kWh/kg
- **Emission class:** Low NOx class 3 (≤80 mg/kWh) according to EN676 in gas
  Low NOx class 3 (≤120 mg/kWh) according to EN267 in light oil
- **Protection level:** IP 41

TECHNICAL DATA

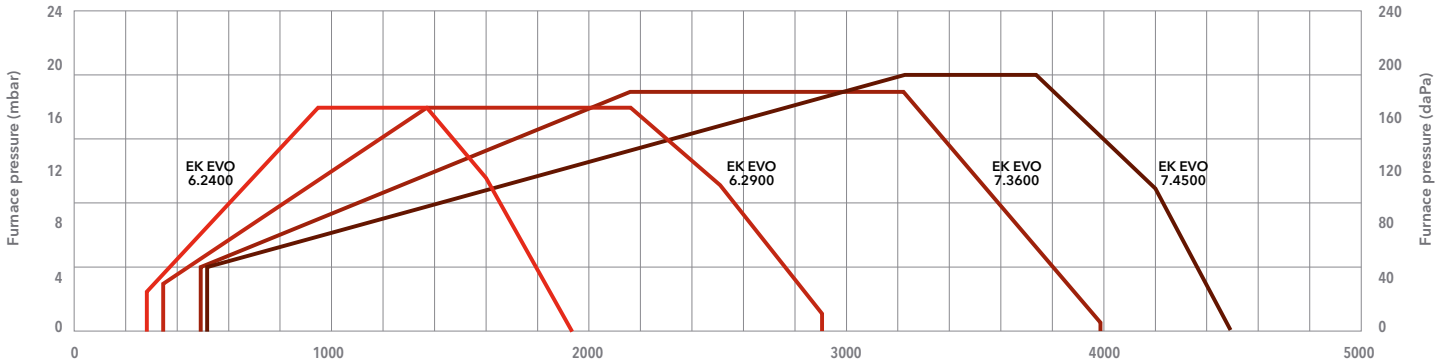

Test conditions conforming to EN676 and EN267 - Temperature: 20°C - Pressure: 1013,5 mbar - Altitude: 0 m a.s.l.

Power (kW)

		EK EVO 6.2400 GL-EF3	EK EVO 6.2900 GL-EF3	EK EVO 7.3600 GL-EF3	EK EVO 7.4500 GL-EF3
Operating range gas		280 – 1920 kW	340 – 2890 kW	470 – 3980 kW	510 – 4500 kW
Operating range oil		360 – 1920 kW	480 – 2890 kW	680 – 3980 kW	740 – 4500 kW
Gas pressure		50 – 500 mbar (50 – 360 mbar for d452 and d453)			
Gas connection		DN65	DN65	DN65	DN65
Control box / flame detector		BT300 / FFS08	BT300 / FFS08	BT300 / FFS08	BT300 / FFS08
Auxiliary voltage		1NPE AC 230 V – 50 Hz TN-S	1NPE AC 230 V – 50 Hz TN-S	1NPE AC 230 V – 50 Hz TN-S	1NPE AC 230 V – 50 Hz TN-S
Power supply		3PE AC 400 V – 50 Hz	3PE AC 400 V – 50 Hz	3PE AC 400 V – 50 Hz	3PE AC 400 V – 50 Hz
Fan motor		50 Hz – 3 kW	50 Hz – 4 kW	50 Hz – 7,5 kW	50 Hz – 7,5 kW
Acoustic level		<76 dB(A)	<77 dB(A)	<83 dB(A)	<81 dB(A)
CE certificate		0085CL0215	0085CL0215	0085CL0215	0085CL0215
Burner codes (body + head)	KN	**3754521**	**3754522**	**3754523**	**3754524**
	KM	**3754525**	**3754526**	**3754527**	**3754528**
	KL	**3754529**	**3754530**	**3754531**	**3754532**

GAS TRAINS

DUNGS

Model	Code
GT-d452-1"1/2 (*)	3750510
GT-d453-2" (*)	3750511
GT-d454-65	3750512
GT-d455-80	3750513
GT-d456-100	3750514

*: integrated filter

SIEMENS

Model	Code
GT-s451-1"1/2	3750525
GT-s452-2"	3750526
GT-s453-65	3750527
GT-s454-80	3750528
GT-s455-100	3750529
GT-s456-125	3750530

FILTERS

Model	Code
FG-Rp1"1/2	3757199
FG-Rp2"	3757200
FG-DN65	3757198
FG-DN80	3757201
FG-DN100	3757195
FG-DN125	3757209

Pressure drops graphs: see following pages
Dimensions of gas trains and gas filters: see page 310

DIMENSIONS (mm)

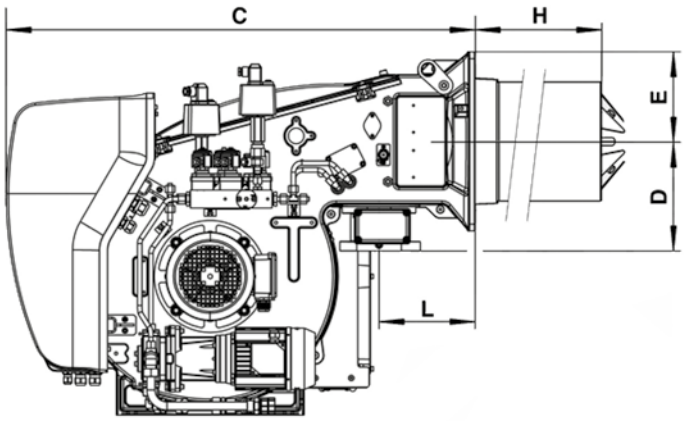

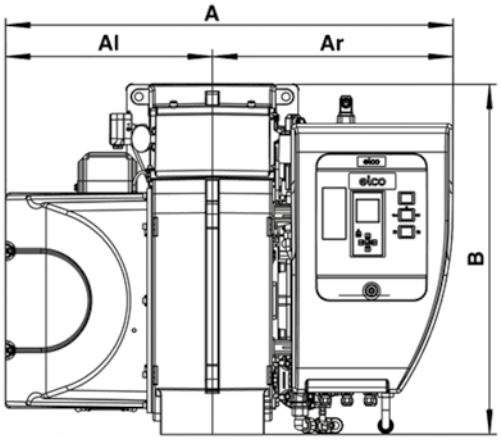

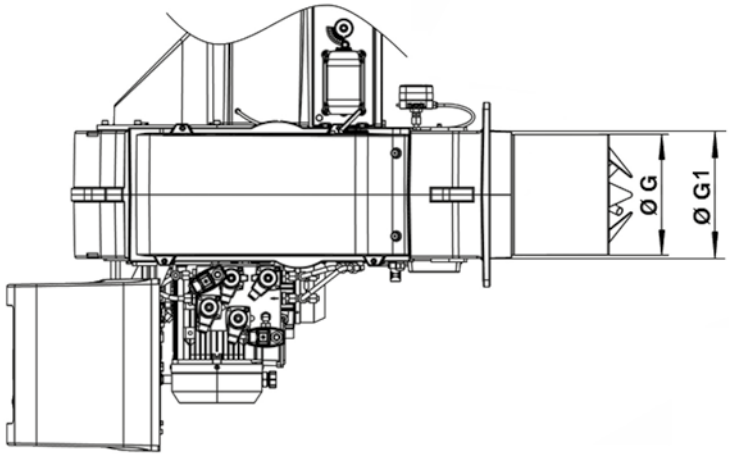

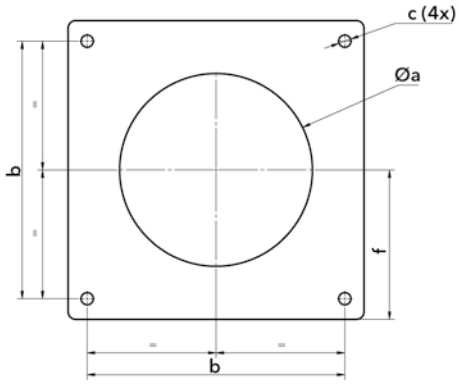

Model	A	Al	Ar	B	C	D	E	ØG	ØG1	H			L	Øa	b	c	f
										KN	KM	KL					
EK EVO 6.2400 GL-EF3	1035	479	556	812	1056	245	200	227	277	400	520	640	215	300-340	340	M16	200
EK EVO 6.2900 GL-EF3	1035	479	556	812	1056	245	200	263	277	400	520	640	215	300-340	340	M16	200
EK EVO 7.3600 GL-EF3	1107	510	597	941	1130	276	235	323.5	339	420	550	680	225	360-400	400	M16	235
EK EVO 7.4500 GL-EF3	1107	510	597	941	1130	276	235	323,5	339	420	550	680	225	360-400	400	M16	235

PACKAGING

The burner is delivered on a pallet with:
- burner body with mounted combustion head
- gas train and filter
- boiler fixing accessories
- technical documentation

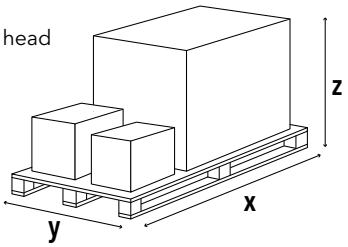

Model	Dimensions (mm)			Gross weight (kg)
	X	Y	Z	
EKEVO 6.2400 GL-EF3	2046	1414	1233	300
EKEVO 6.2900 GL-EF3	2046	1414	1233	300
EKEVO 7.3600 GL-EF3	2046	1414	1233	350
EKEVO 7.4500 GL-EF3	2046	1414	1233	350

EK EVO 6 GL-EF3 / EK EVO 7 GL-EF3

280 ... 4500 kW
Two stage progressive/modulating electronic in gas and in light oil

PRESSURE LOSS [BURNER HEAD + GAS TRAIN] (mbar)

EK EVO 6.2400 GL-EF3

DUNGS

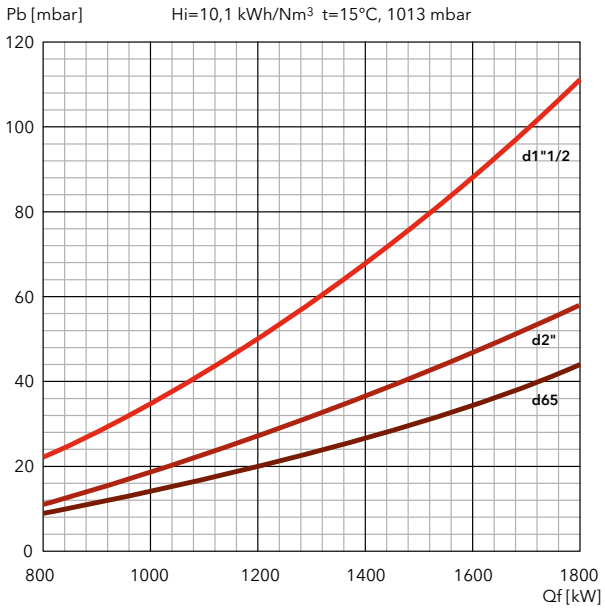

SIEMENS

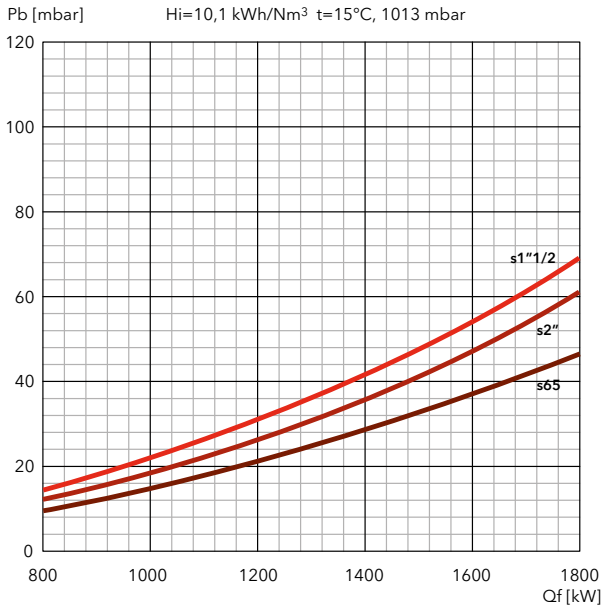

EK EVO 6.2900 GL-EF3

DUNGS

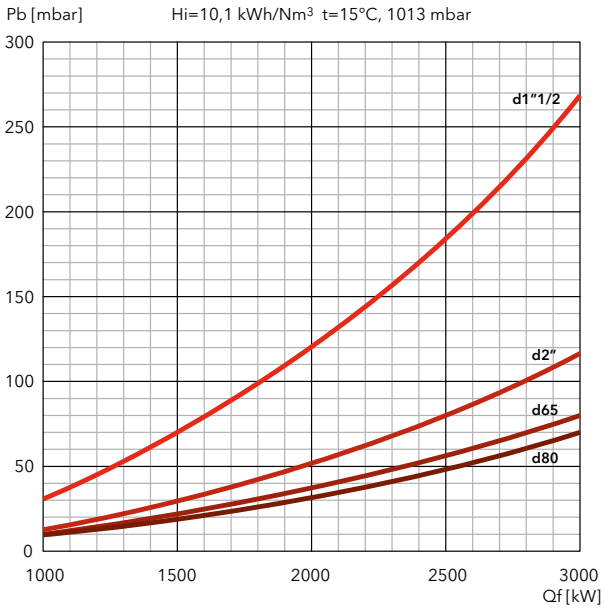

SIEMENS

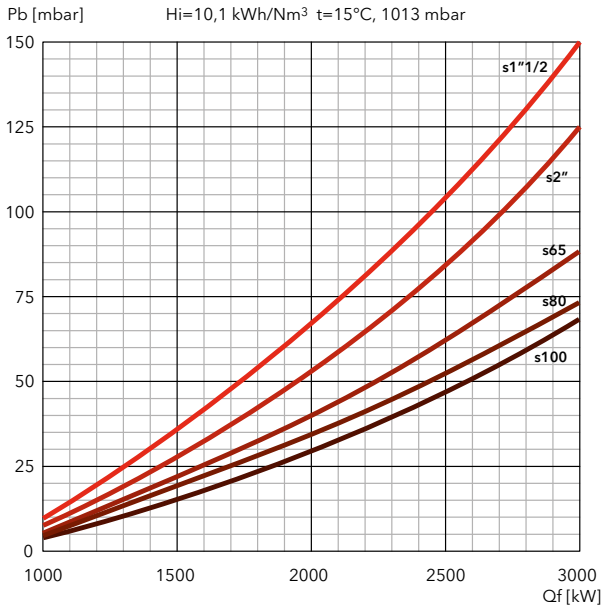

FILTERS

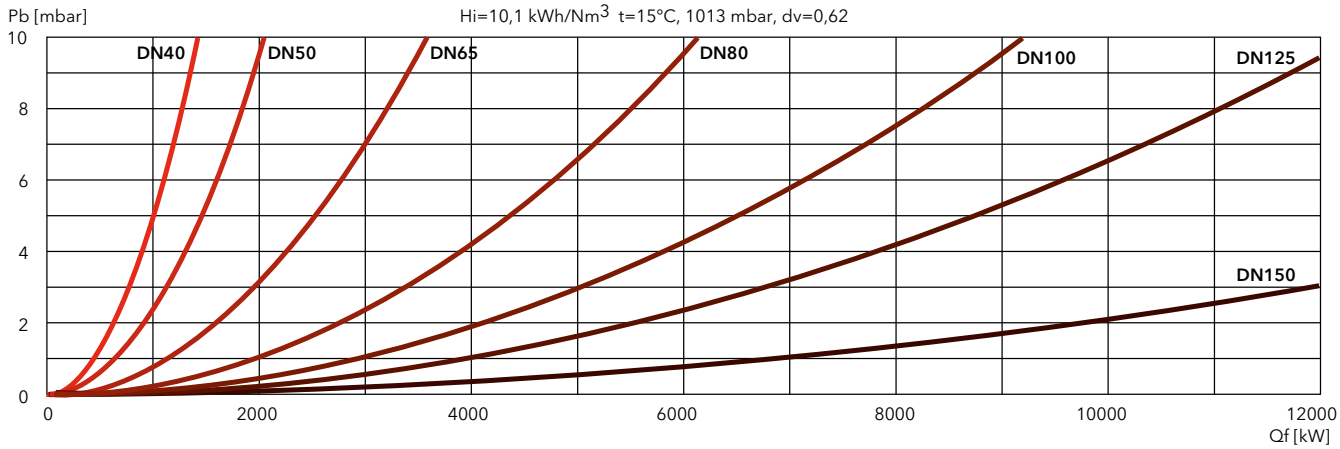

PRESSURE LOSS [BURNER HEAD + GAS TRAIN] (mbar)

EK EVO 7.3600 GL-EF3

DUNGS

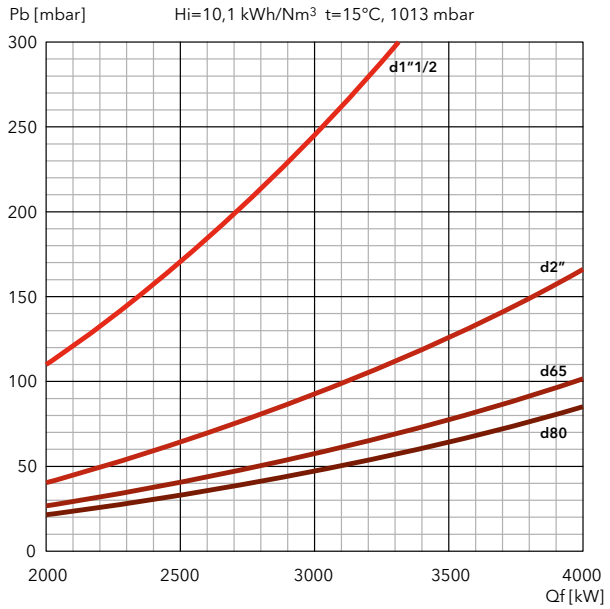

SIEMENS

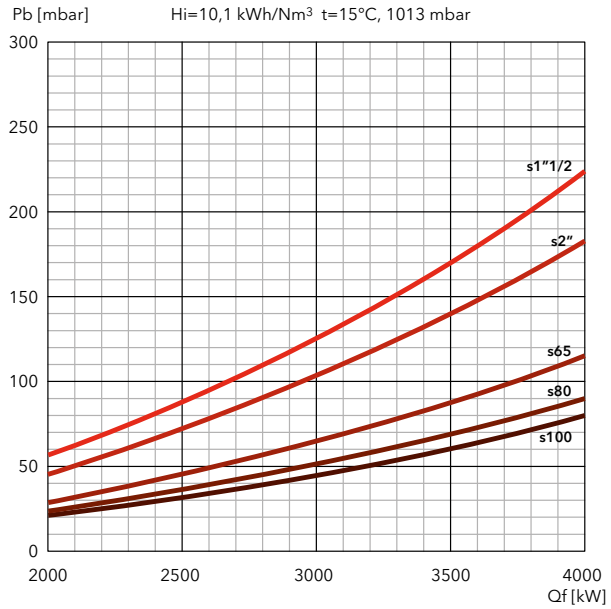

EK EVO 7.4500 GL-EF3

DUNGS

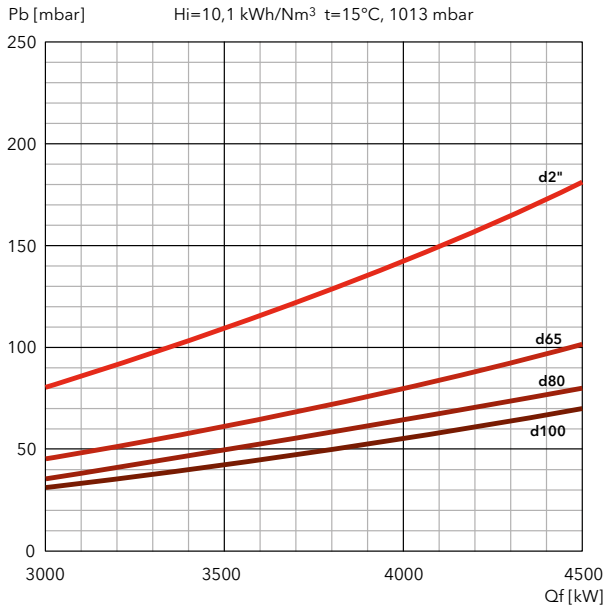

SIEMENS

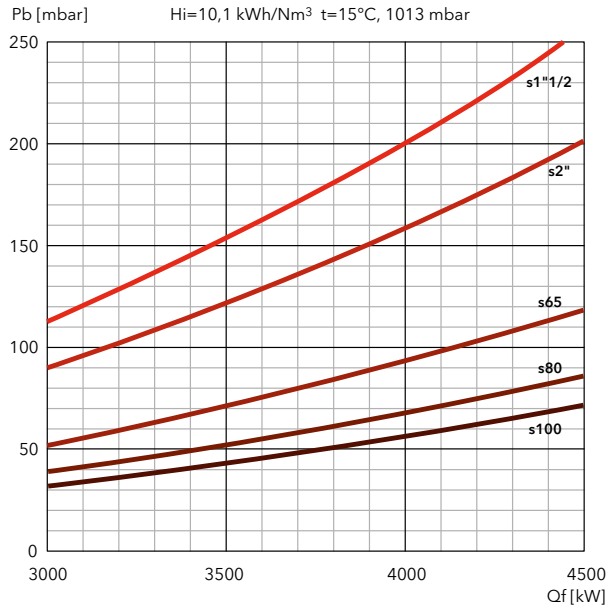

FILTERS

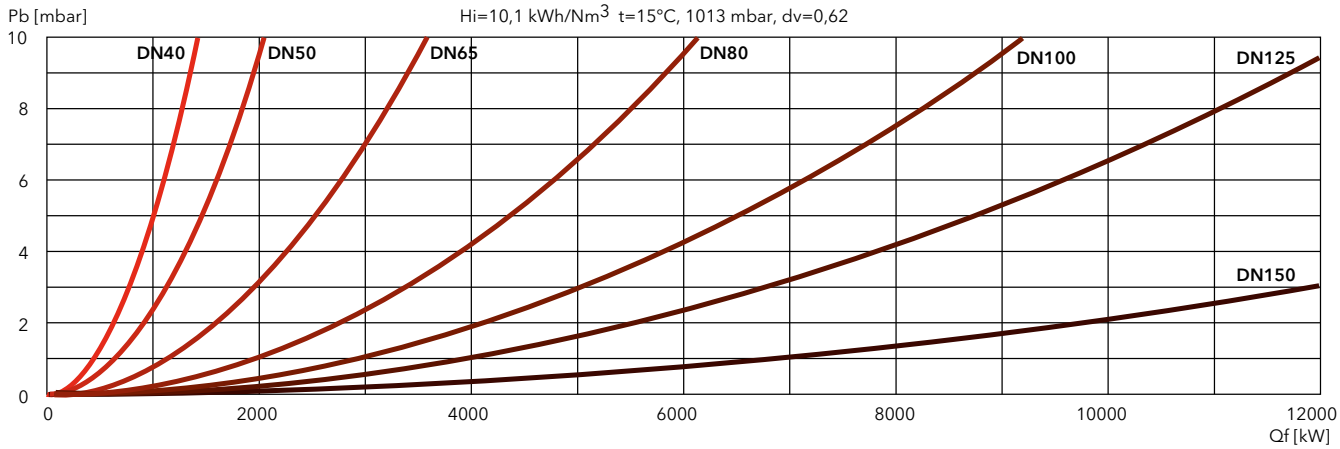

EK EVO

GAS / LIGHT OIL

Low NOx Class 3

EK EVO 8 GL-EF3 / EK EVO 9 GL-EF3

830 … 6950 kW

Two stage progressive/modulating electronic in gas and in light oil

- **Fuels:** natural gas, Hi = 6,99 … 11,39 kWh/Nm³;
  light oil, viscosity 6 mm²/s at 20°C, Hi = 11,86 kWh/kg
- **Emission class:** Low NOx class 3 (≤80 mg/kWh) according to EN676 in gas
  Low NOx class 3 (≤120 mg/kWh) according to EN267 in light oil
- **Protection level:** IP 41

TECHNICAL DATA

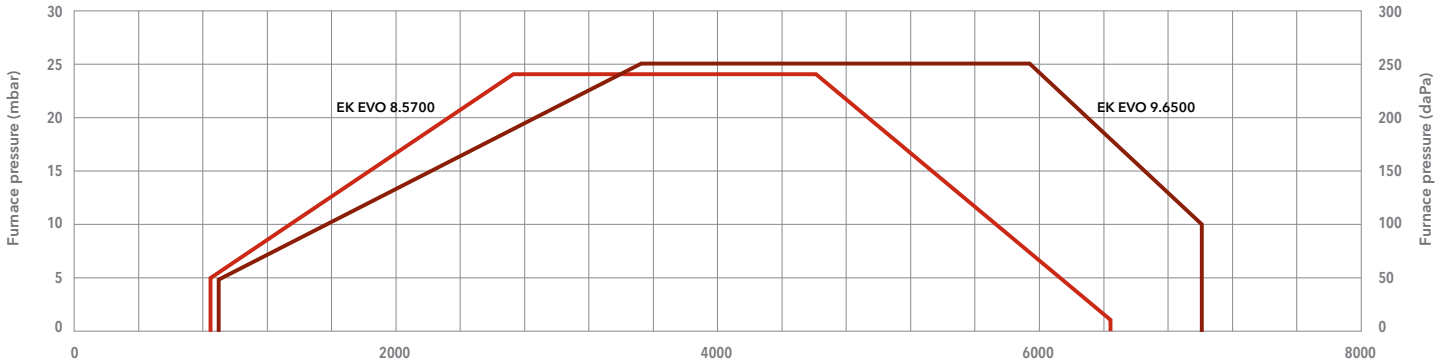

Test conditions conforming to EN676 and EN267 - Temperature: 20°C - Pressure: 1013,5 mbar - Altitude: 0 m a.s.l.

		EK EVO 8.5700 GL-EF3	EK EVO 9.6500 GL-EF3
Operating range gas		830 – 6450 kW	860 – 6950 kW
Operating range oil		1100 – 6450 kW	1100 – 6600 kW
Gas pressure		100 – 500 mbar (100 – 360 mbar for d457)	100 – 500 mbar (100 – 360 mbar for d457)
Gas connection		DN100	DN100
Control box / flame detector		BT300 / FFS08	BT300 / FFS08
Auxiliary voltage		1NPE AC 230 V – 50 Hz TN-S	1NPE AC 230 V – 50 Hz TN-S
Power supply		3PE AC 400 V – 50 Hz	3PE AC 400 V – 50 Hz
Fan motor		50 Hz – 15 kW	50 Hz – 22 kW
Acoustic level		<80,2 dB(A)	<82,9 dB(A)
CE certificate		0085CL0215	0085CL0215
Burner codes (body + head)	KN	**3754825**	**3754826**
	KM	**3754829**	**3754830**
	KL	**3754833**	**3754834**

GAS TRAINS

DUNGS

Model	Code
GT-d457-2" (*)	3750515
GT-d458-65	3750516
GT-d459-80	3750517
GT-d460-100	3750518
GT-d125	on request

*: integrated filter

SIEMENS

Model	Code
GT-s456-1"1/2	3750536
GT-s457-2"	3750537
GT-s458-65	3750538
GT-s459-80	3750539
GT-s460-100	3750540
GT-s461-125	3750541

FILTERS

Model	Code
FG-Rp1"1/2	3757199
FG-Rp2"	3757200
FG-DN65	3757198
FG-DN80	3757201
FG-DN100	3757195
FG-DN125	3757209

i **Pressure drops graphs**: see following pages
Dimensions of gas trains and gas filters: see page 311

DIMENSIONS (mm)

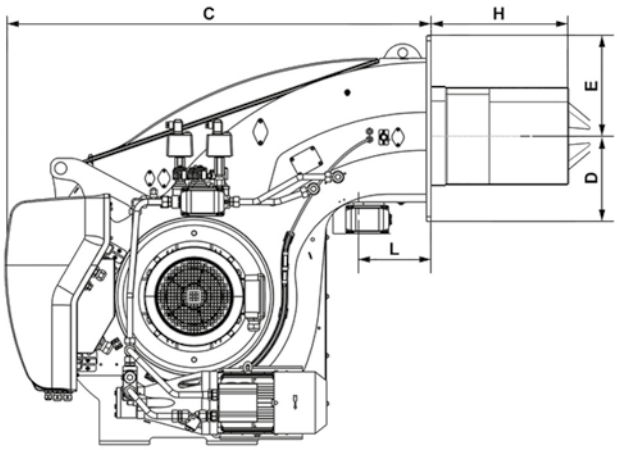

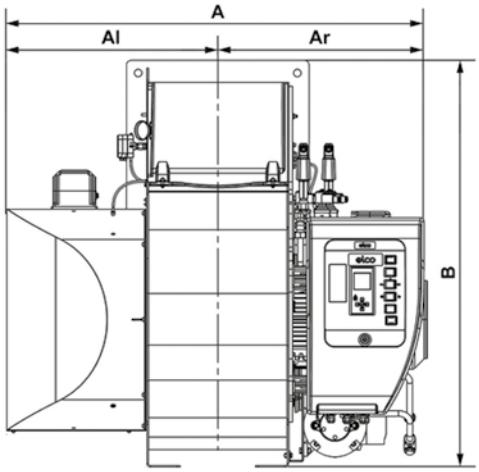

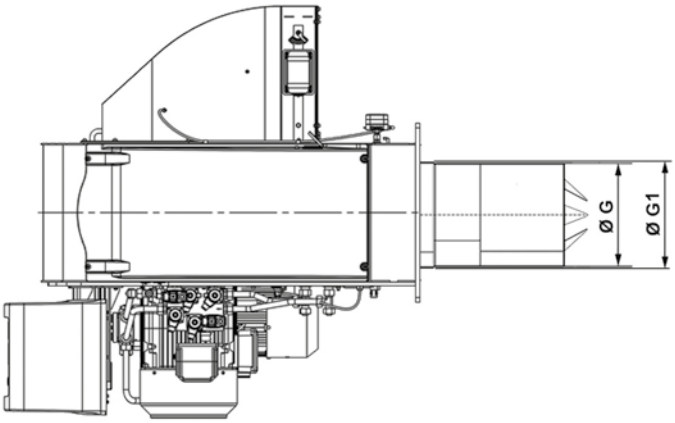

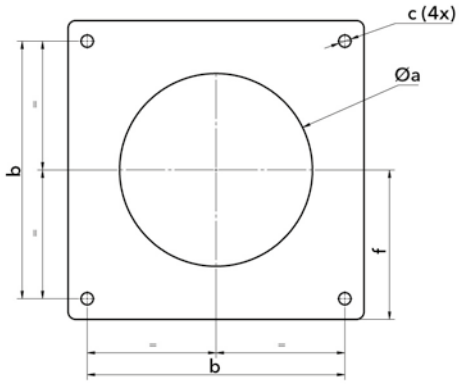

Model	A	Al	Ar	B	C	D	E	ØG	ØG1	H			L	Øa	b	c	f
										KN	KM	KL					
EK EVO 8.5700 GL-EF3	1325	670	655	1231	1351	307	293	369	376	528	668	808	230	385-410	505	M20	293
EK EVO 9.6500 GL-EF3	1400	670	730	1291	1348	332	293	369	438,5	543	693	843	230	450-480	505	M20	293

PACKAGING

The burner is delivered on a pallet with:
- burner body with mounted combustion head
- gas train and filter
- boiler fixing accessories
- technical documentation

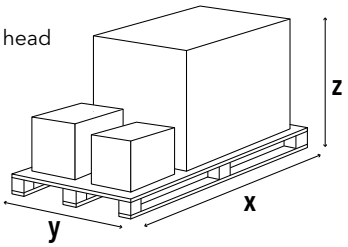

Model	Dimensions (mm)			Gross weight (kg)
	X	Y	Z	
EK EVO 8.5700 GL-EF3	2300	1500	1573	580
EK EVO 9.6500 GL-EF3	2300	1500	1573	700

EK EVO 8 GL-EF3 / EK EVO 9 GL-EF3

830 ... 6950 kW
Two stage progressive/modulating electronic in gas and in light oil

PRESSURE LOSS [BURNER HEAD + GAS TRAIN] (mbar)

EK EVO 8.5700 GL-EF3

DUNGS

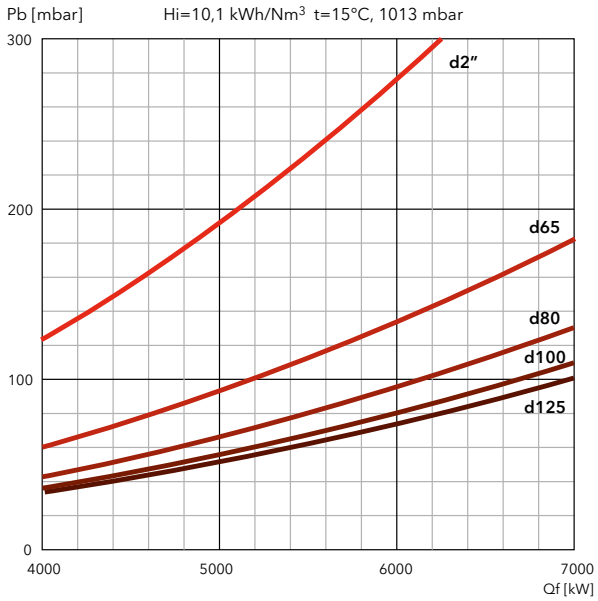

SIEMENS

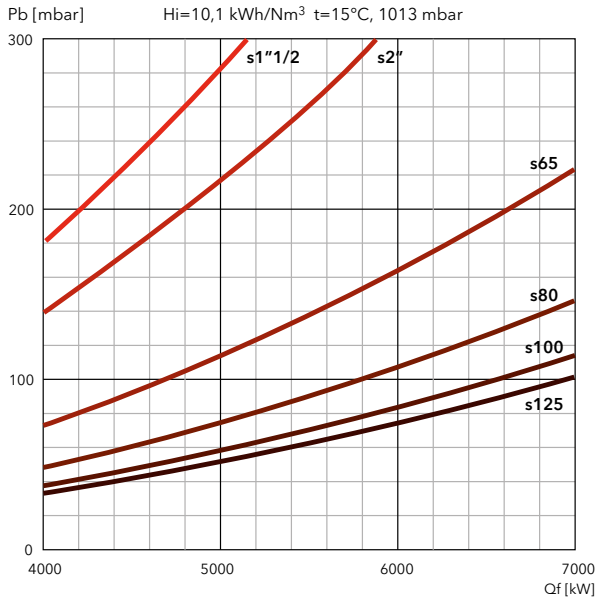

FILTERS

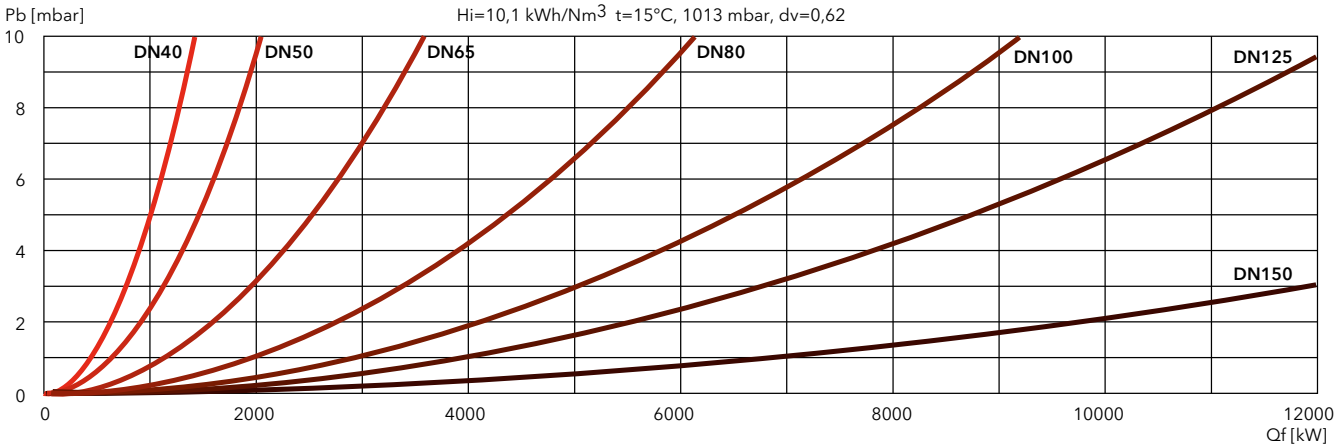

PRESSURE LOSS [BURNER HEAD + GAS TRAIN] (mbar)

EK EVO 9.6500 GL-EF3

DUNGS

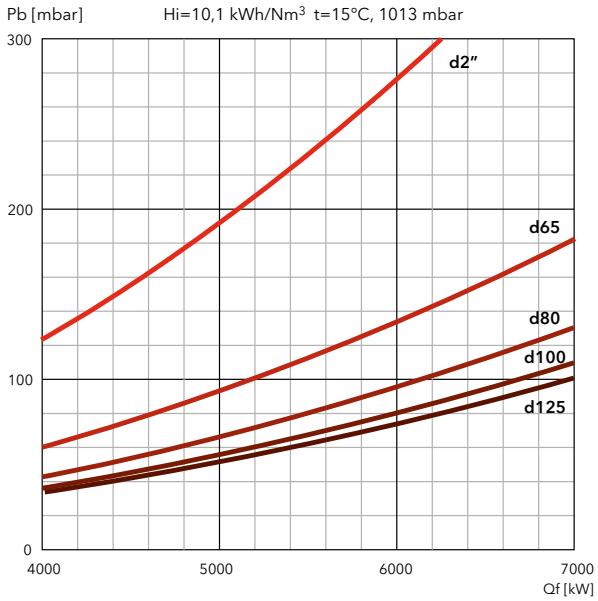

SIEMENS

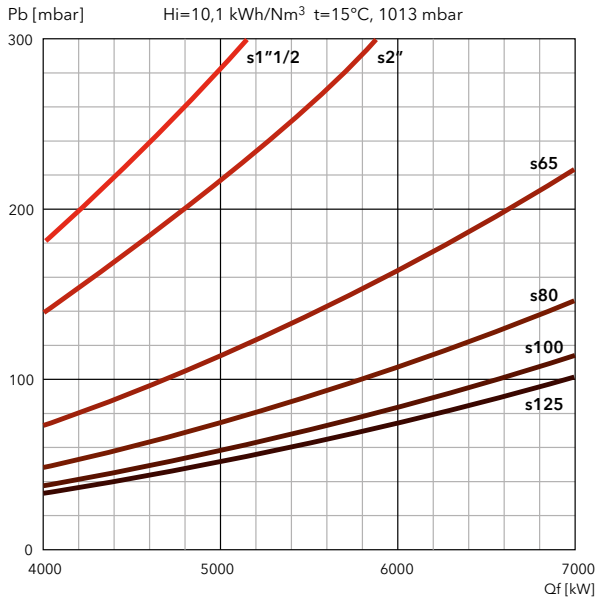

FILTERS

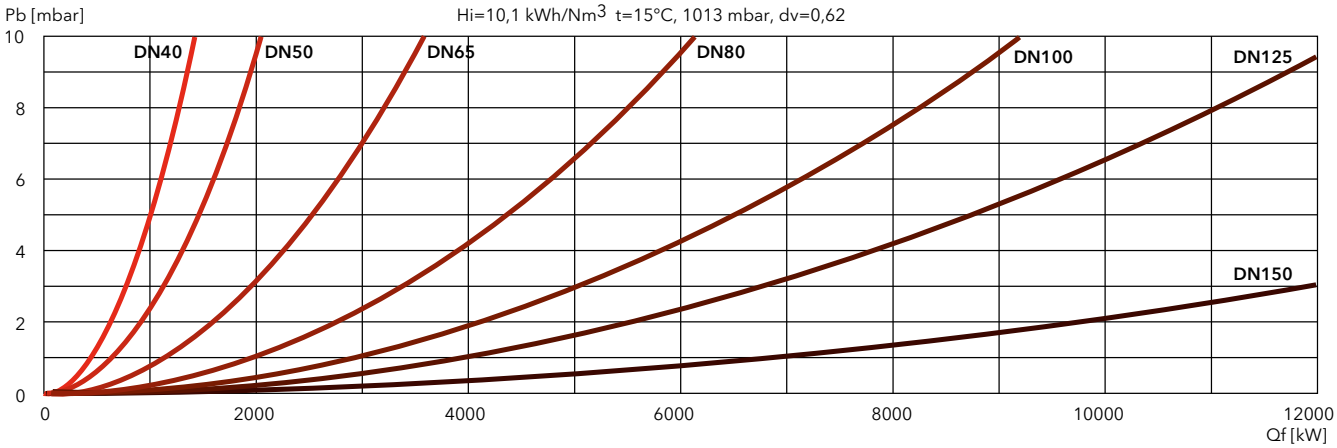

EK EVO

GAS / LIGHT OIL

Low NOx Class 3

EK EVO 9 GL-EUF

1040 … 9570 kW
Two stage progressive/modulating electronic in gas and in light oil

- **Fuels:** natural gas, Hi = 6,99 … 11,39 kWh/Nm³;
  light oil, viscosity 6 mm²/s at 20°C, Hi = 11,86 kWh/kg
- **Emission class:** Low NOx class 3 (≤80 mg/kWh) according to EN676 in gas
  Low NOx class 3 (≤120 mg/kWh) according to EN267 in light oil
- **Protection level:** IP 41

TECHNICAL DATA

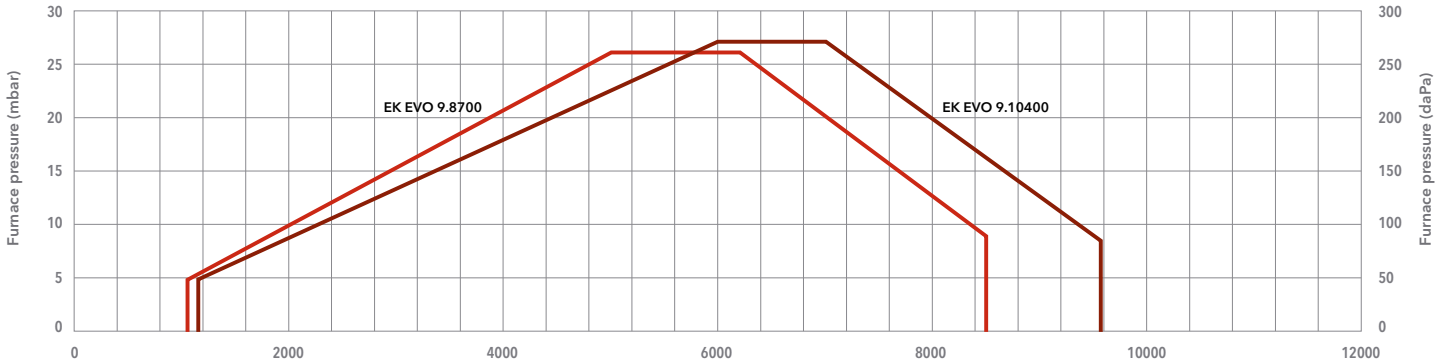

Test conditions conforming to EN676 and EN267 - Temperature: 20°C - Pressure: 1013,5 mbar - Altitude: 0 m a.s.l.

Power (kW)

		EK EVO 9.8700 GL-EUF	EK EVO 9.10400 GL-EUF
Operating range gas		1040 – 8500 kW	1160 – 9570 kW
Operating range oil		1800 – 8500 kW	2550 – 9570 kW
Gas pressure		100 – 500 mbar (100 – 360 mbar for d457)	100 – 500 mbar (100 – 360 mbar for d457)
Gas connection		DN100	DN100
Control box / flame detector		BT300 / FFS08	BT300 / FFS08
Auxiliary voltage		1NPE AC 230 V – 50 Hz TN-S	1NPE AC 230 V – 50 Hz TN-S
Power supply		3PE AC 400 V – 50 Hz	3PE AC 400 V – 50 Hz
Fan motor		50 Hz – 18,5 kW	50 Hz – 22 kW
Acoustic level		<85,9 dB(A)	<86,6 dB(A)
CE certificate		0085CL0215	0085CL0215
Burner codes (body + head)	KN	**3754827**	**3754828**
	KM	**3754831**	**3754832**
	KL	**3754835**	**3754836**

GAS TRAINS

DUNGS

Model	Code
GT-d457-2" (*)	3750515
GT-d458-65	3750516
GT-d459-80	3750517
GT-d460-100	3750518

*: integrated filter

SIEMENS

Model	Code
GT-s457-2"	3750537
GT-s458-65	3750538
GT-s459-80	3750539
GT-s460-100	3750540
GT-s461-125	3750541

FILTERS

Model	Code
FG-Rp2"	3757200
FG-DN65	3757198
FG-DN80	3757201
FG-DN100	3757195
FG-DN125	3757209

Pressure drops graphs: see following pages
Dimensions of gas trains and gas filters: see page 311

DIMENSIONS (mm)

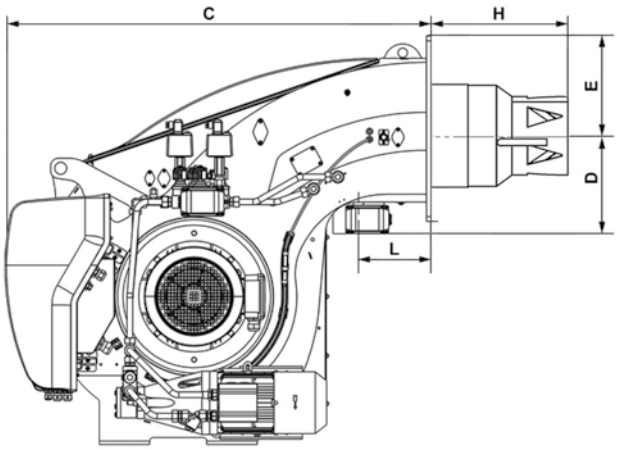

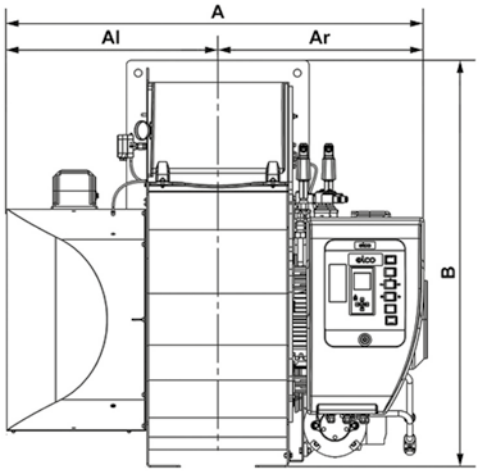

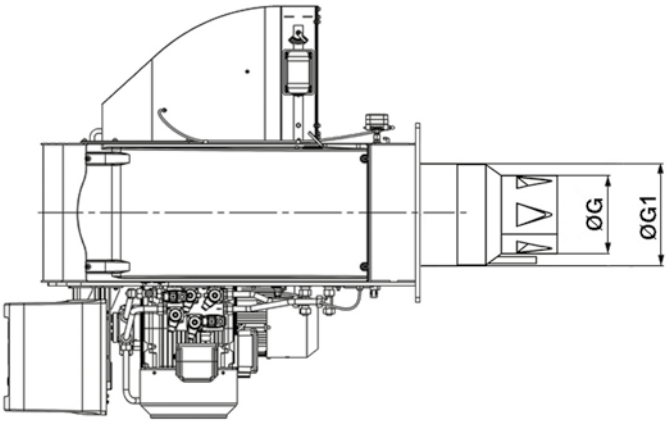

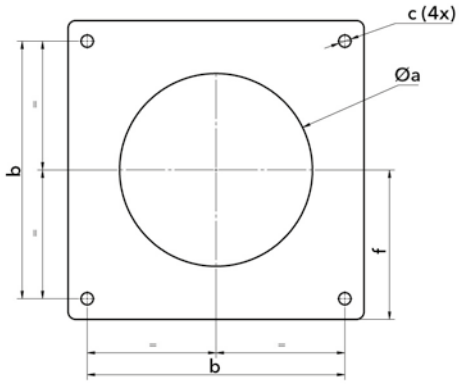

Model	A	Al	Ar	B	C	D	E	ØG	ØG1	H			L	Øa	b	c	f
										KN	KM	KL					
EK EVO 9.8700 GL-EUF	1336	670	666	1291	1348	332	293	325	438,5	575	725	875	230	450-480	505	M20	293
EK EVO 9.10400 GL-EUF	1393	670	723	1291	1348	332	293	335	438,5	575	725	875	230	450-480	505	M20	293

PACKAGING

The burner is delivered on a pallet with:
- burner body with mounted combustion head
- gas train and filter
- boiler fixing accessories
- technical documentation

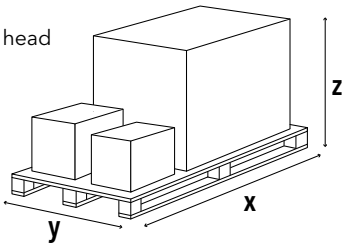

Model	Dimensions (mm)			Gross weight (kg)
	X	Y	Z	
EK EVO 9.8700 GL-EUF	2300	1500	1573	700
EK EVO 9.10400 GL-EUF	2300	1500	1573	700

EK EVO 9 GL-EUF

1040 ... 9570 kW
Two stage progressive/modulating electronic in gas and in light oil

PRESSURE LOSS [BURNER HEAD + GAS TRAIN] (mbar)

EK EVO 9.8700 GL-EUF

DUNGS

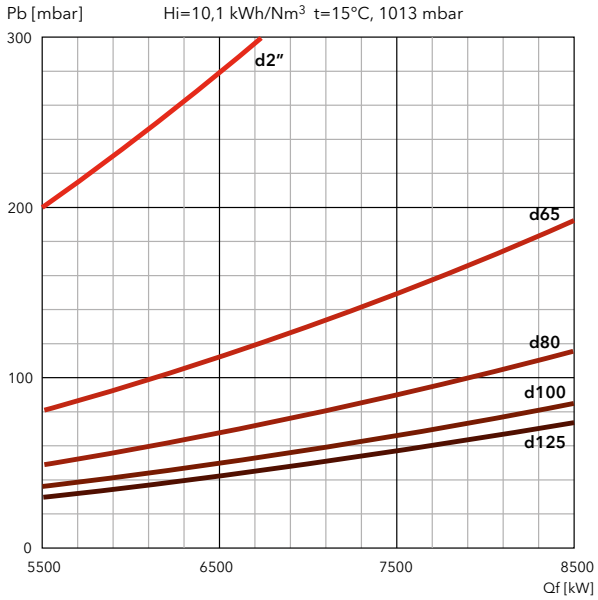

SIEMENS

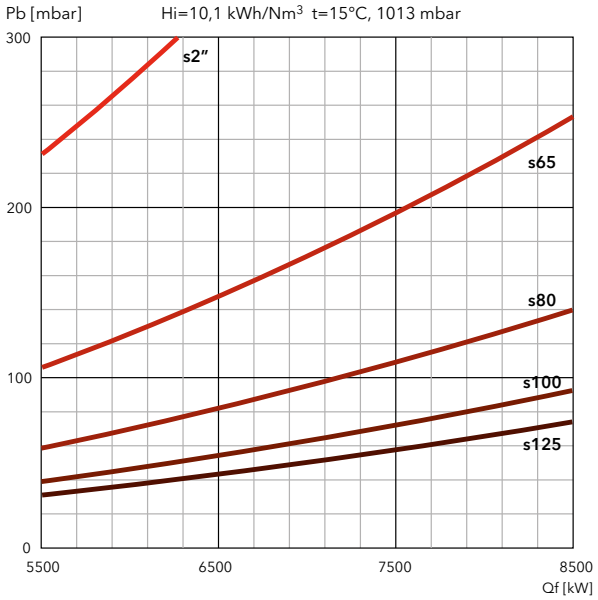

FILTERS

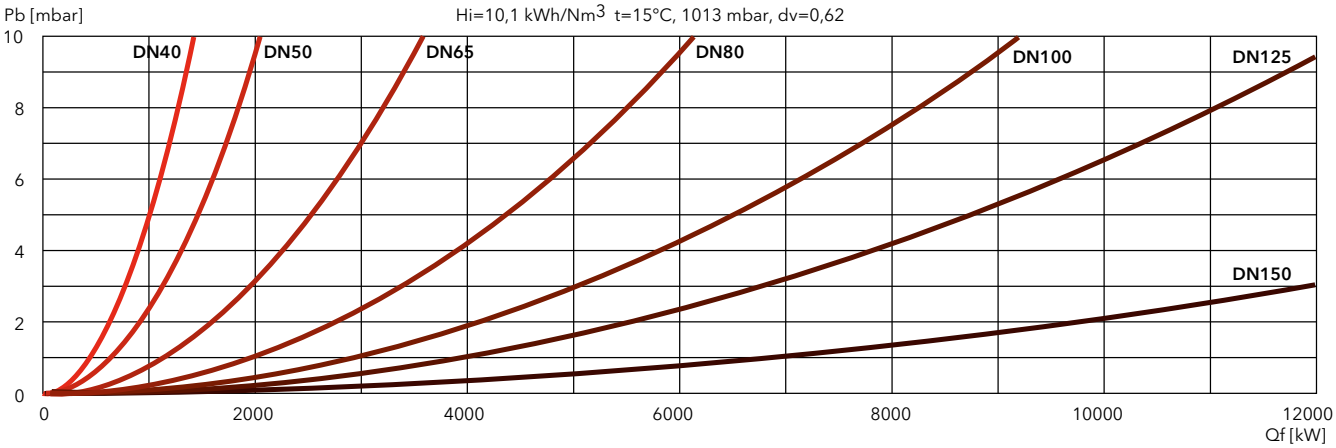

PRESSURE LOSS [BURNER HEAD + GAS TRAIN] (mbar)

EK EVO 9.10400 GL-EUF

DUNGS

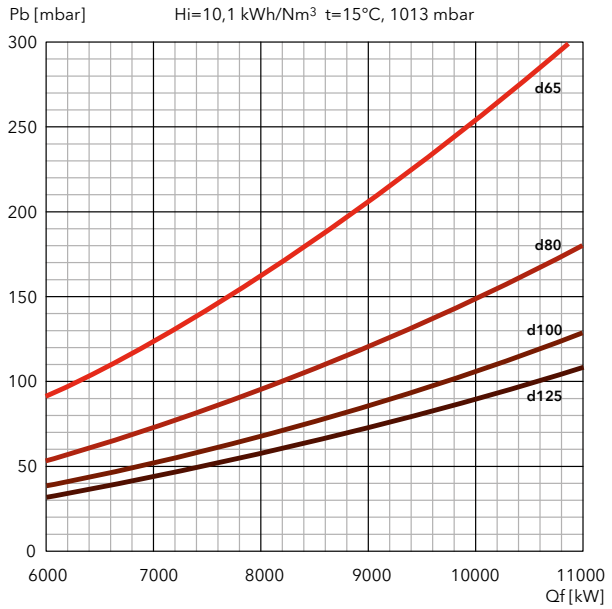

SIEMENS

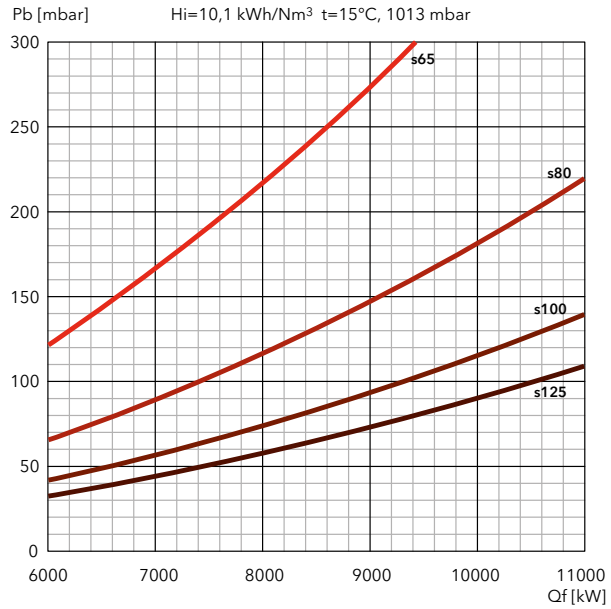

FILTERS

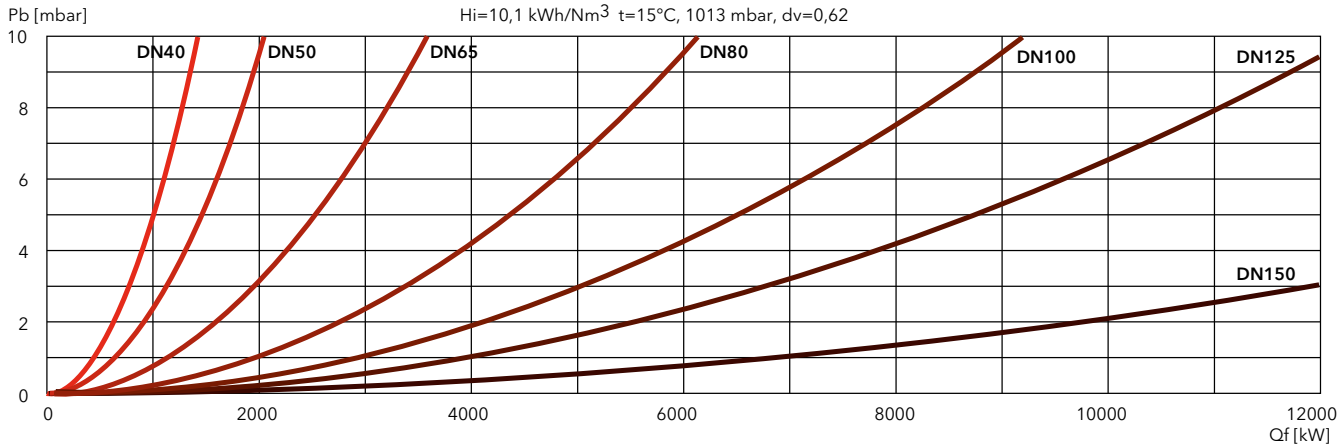

EK EVO

GAS / LIGHT OIL

Low NOx Class 2

EK EVO 6 GL-EZ3 / EK EVO 7 GL-EZ3

290 … 4740 kW

Two stage progressive/modulating electronic in gas / Three stages in light oil

- **Fuels:** natural gas, Hi = 6,99 … 11,39 kWh/Nm³;
  light oil, viscosity 6 mm²/s at 20°C, Hi = 11,86 kWh/kg
- **Emission class:** Low NOx class 2 (≤120 mg/kWh) according to EN676 in gas
  Low NOx class 2 (≤185 mg/kWh) according to EN267 in light oil
- **Protection level:** IP 41

TECHNICAL DATA

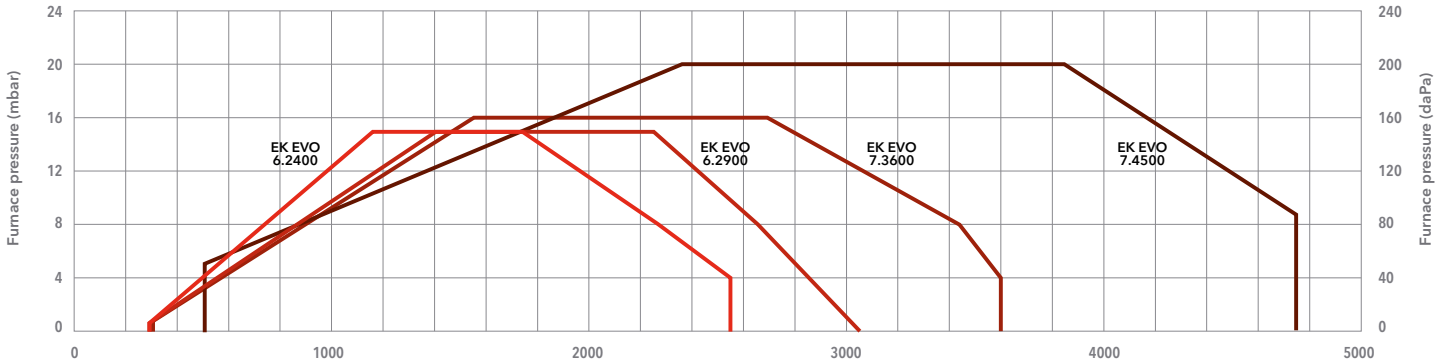

Test conditions conforming to EN676 and EN267 - Temperature: 20°C - Pressure: 1013,5 mbar - Altitude: 0 m a.s.l.

Power (kW)

		EK EVO 6.2400 GL-EZ3	EK EVO 6.2900 GL-EZ3	EK EVO 7.3600 GL-EZ3	EK EVO 7.4500 GL-EZ3
Operating range gas		290 – 2550 kW	290 – 3050 kW	300 – 3600 kW	510 – 4740 kW
Operating range oil		730 – 2470 kW	730 – 2790 kW	1090 – 3600 kW	1300 – 4740 kW
Gas pressure		50 – 500 mbar (50 – 360 mbar for d452 and d453)		50 – 500 mbar (50 – 360 mbar for d452 and d453)	
Gas connection		DN65	DN65	DN65	DN65
Control box / flame detector		BT300 / QRA2	BT300 / QRA2	BT300 / QRA2	BT300 / QRA2
Auxiliary voltage		1NPE AC 230 V – 50 Hz TN-S	1NPE AC 230 V – 50 Hz TN-S	1NPE AC 230 V – 50 Hz TN-S	1NPE AC 230 V – 50 Hz TN-S
Power supply		3PE AC 400 V – 50 Hz	3PE AC 400 V – 50 Hz	3PE AC 400 V – 50 Hz	3PE AC 400 V – 50 Hz
Fan motor		50 Hz – 3 kW	50 Hz – 4 kW	50 Hz – 5,5 kW	50 Hz – 7,5 kW
Acoustic level		<75 dB(A)	<77 dB(A)	<81 dB(A)	<82,5 dB(A)
CE certificate		0085CL0215	0085CL0215	0085CL0215	0085CL0215
Burner codes (body + head)	KN	**3760186**	**3760189**	**3760192**	**3760195**
	KM	**3760187**	**3760190**	**3760193**	**3760196**
	KL	**3760188**	**3760191**	**3760194**	**3760197**

GAS TRAINS

DUNGS

Model	Code
GT-d452-1"1/2 (*)	3750510
GT-d453-2" (*)	3750511
GT-d454-65	3750512
GT-d455-80	3750513
GT-d456-100	3750514

*: integrated filter

SIEMENS

Model	Code
GT-s451-1"1/2	3750525
GT-s452-2"	3750526
GT-s453-65	3750527
GT-s454-80	3750528
GT-s455-100	3750529
GT-s456-125	3750530

FILTERS

Model	Code
FG-Rp1"1/2	3757199
FG-Rp2"	3757200
FG-DN65	3757198
FG-DN80	3757201
FG-DN100	3757195
FG-DN125	3757209

Pressure drops graphs: see following pages
Dimensions of gas trains and gas filters: see page 310

DIMENSIONS (mm)

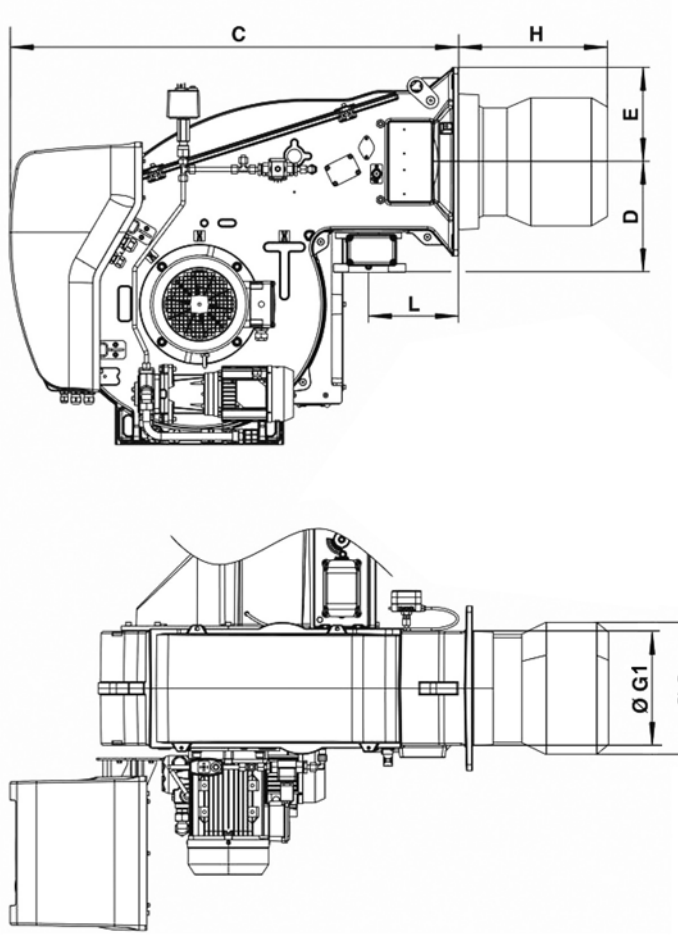

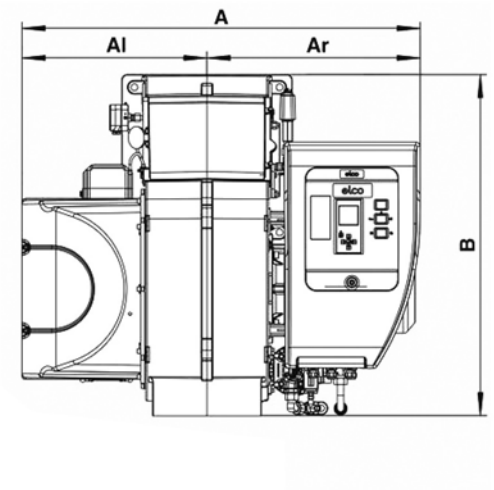

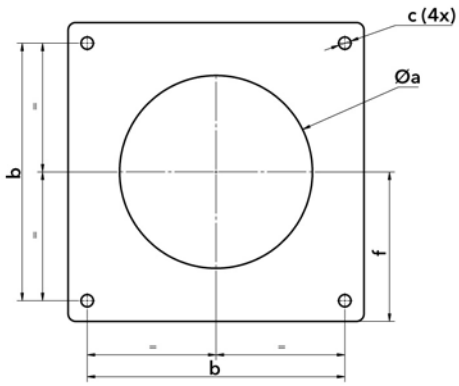

Model	A	Al	Ar	B	C	D	E	ØG	ØG1	H			L	Øa	b	c	f
										KN	KM	KL					
EK EVO 6.2400 GL-EZ3	1035	479	556	812	1050	245	200	320	277	330	450	570	215	330-340	340	M16	200
EK EVO 6.2900 GL-EZ3	1035	479	556	812	1050	245	200	320	277	330	450	570	215	330-340	340	M16	200
EK EVO 7.3600 GL-EZ3	1107	510	597	941	1130	276	235	320	339	370	500	630	225	330-400	400	M16	235
EK EVO 7.4500 GL-EZ3	1107	510	597	941	1130	276	235	370	339	370	500	630	225	380-400	400	M16	235

PACKAGING

The burner is delivered on a pallet with:
- burner body with mounted combustion head
- gas train and filter
- boiler fixing accessories
- technical documentation

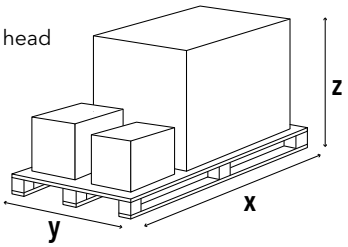

Model	Dimensions (mm)			Gross weight (kg)
	X	Y	Z	
EK EVO 6.2400 GL-EZ3	2046	1414	1233	300
EK EVO 6.2900 GL-EZ3	2046	1414	1233	300
EK EVO 7.3600 GL-EZ3	2046	1414	1233	350
EK EVO 7.4500 GL-EZ3	2046	1414	1233	350

EK EVO 6 GL-EZ3 / EK EVO 7 GL-EZ3

290 ... 4740 kW
Two stage progressive/modulating electronic in gas / Three stages in light oil

PRESSURE LOSS [BURNER HEAD + GAS TRAIN] (mbar)

EK EVO 6.2400 GL-EZ3

DUNGS

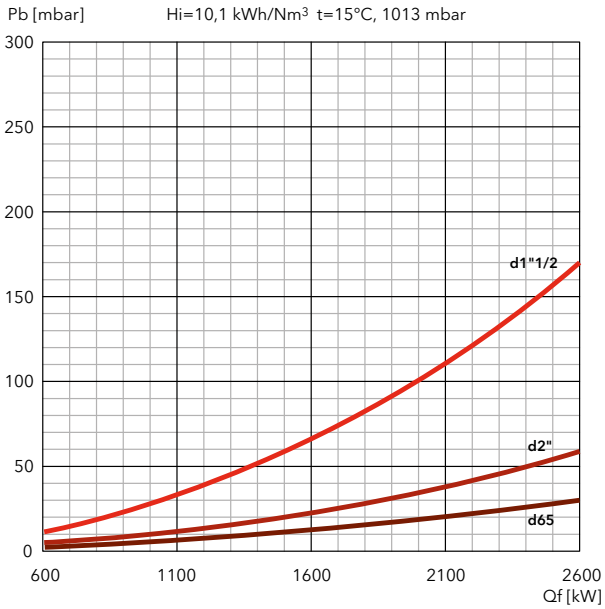

SIEMENS

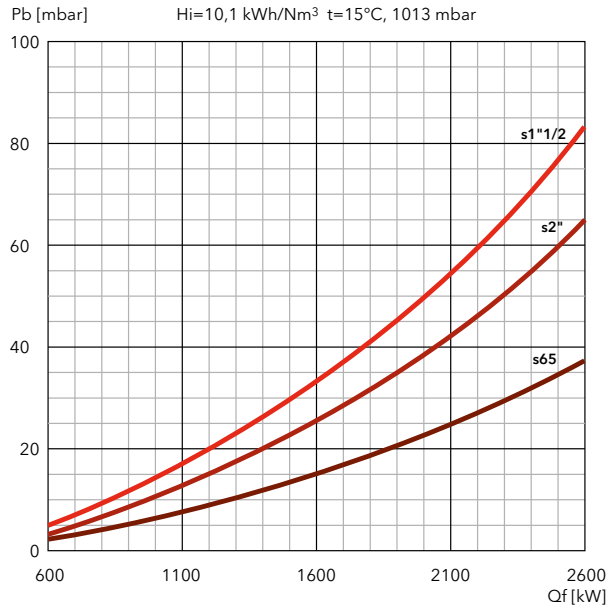

EK EVO 6.2900 GL-EZ3

DUNGS

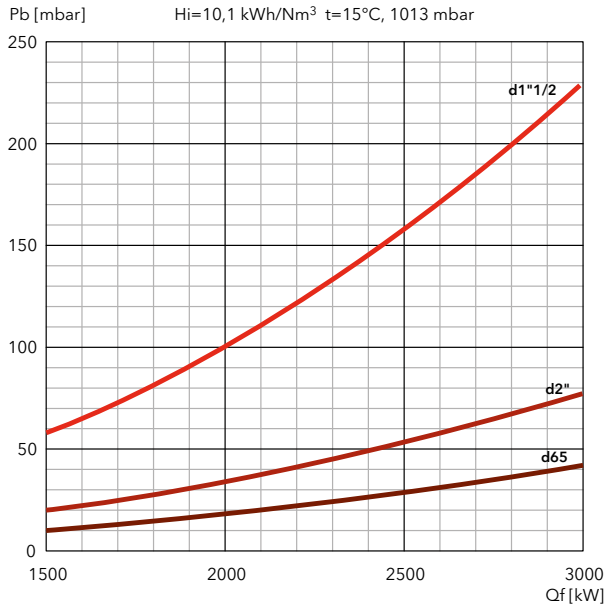

SIEMENS

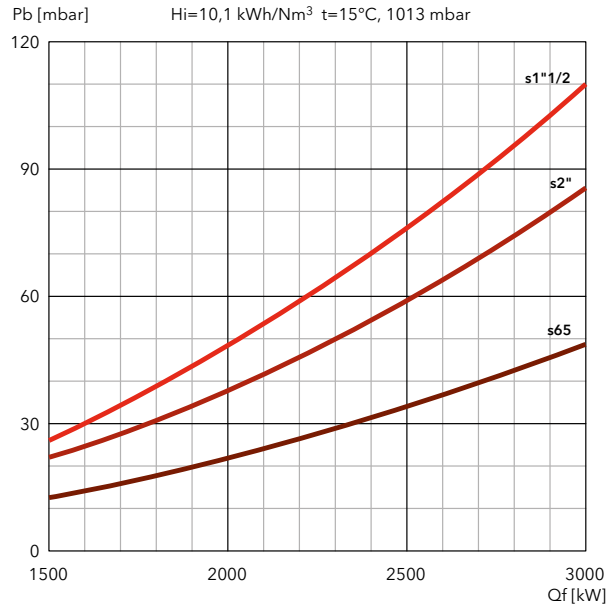

FILTERS

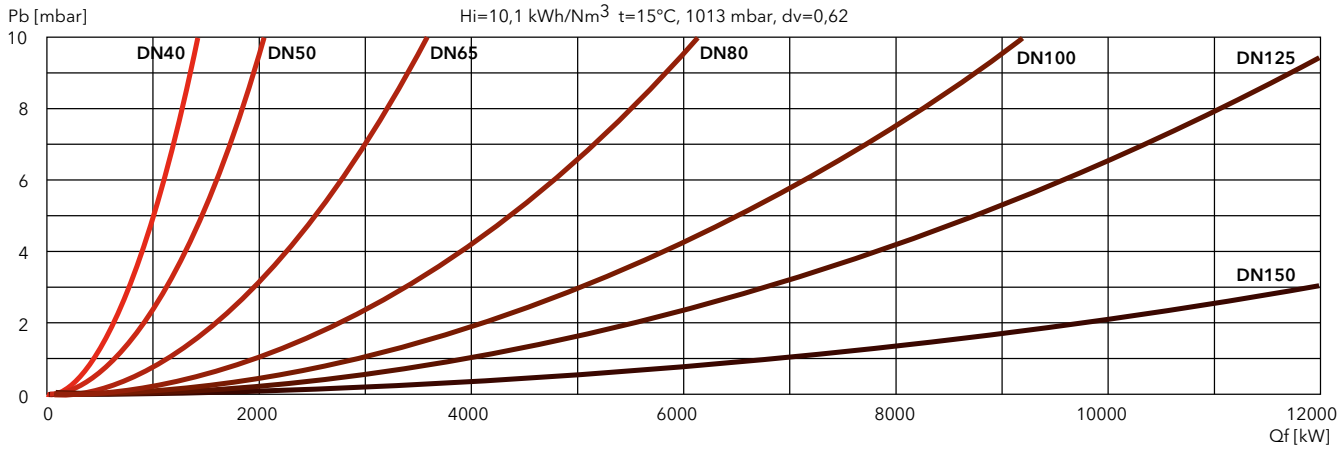

PRESSURE LOSS [BURNER HEAD + GAS TRAIN] (mbar)

EK EVO 7.3600 GL-EZ3

DUNGS

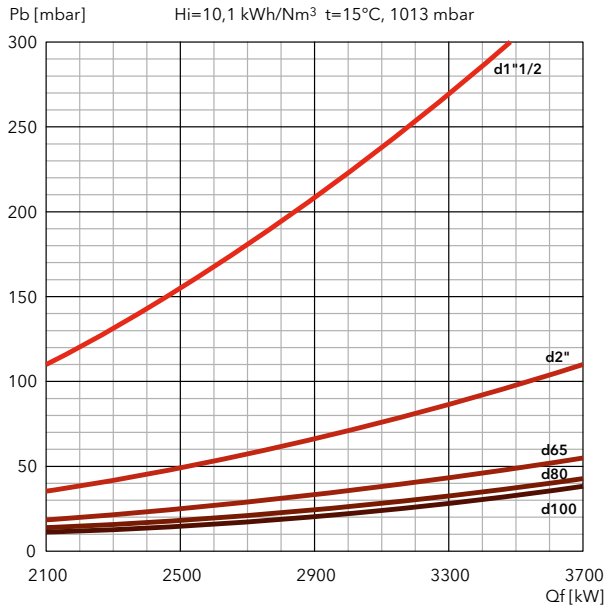

SIEMENS

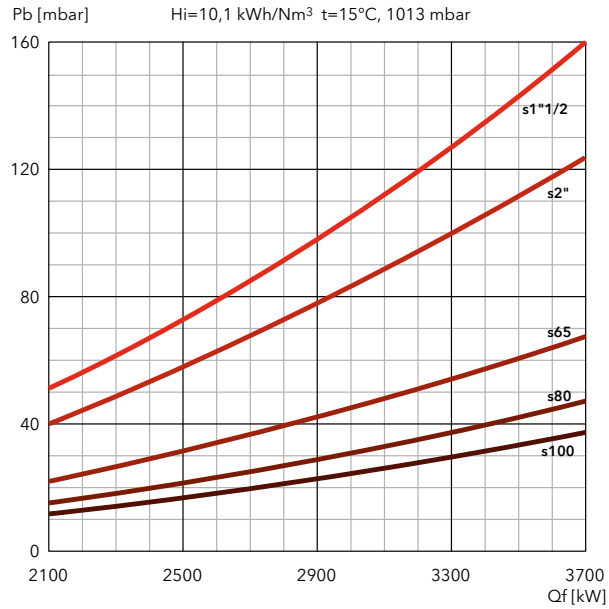

EK EVO 7.4500 GL-EZ3

DUNGS

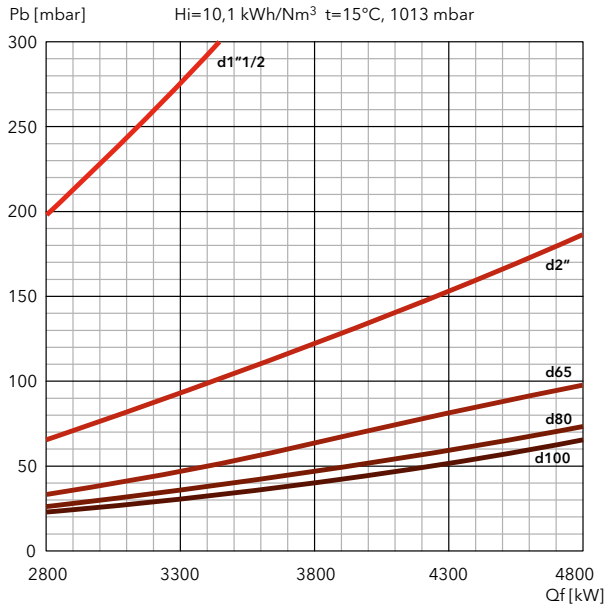

SIEMENS

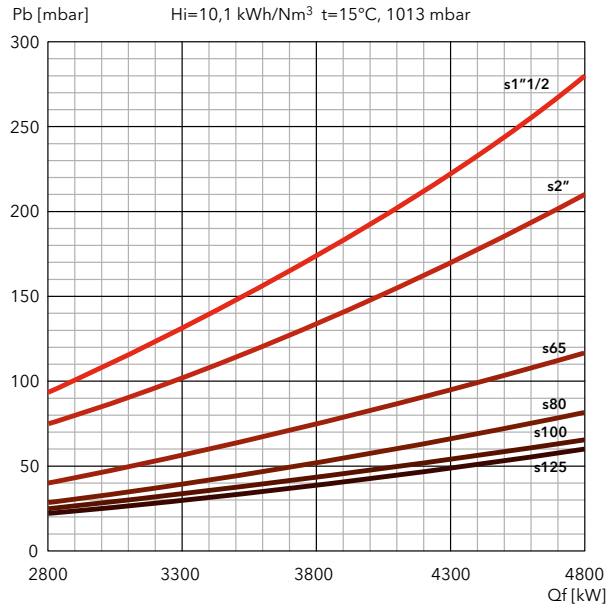

FILTERS

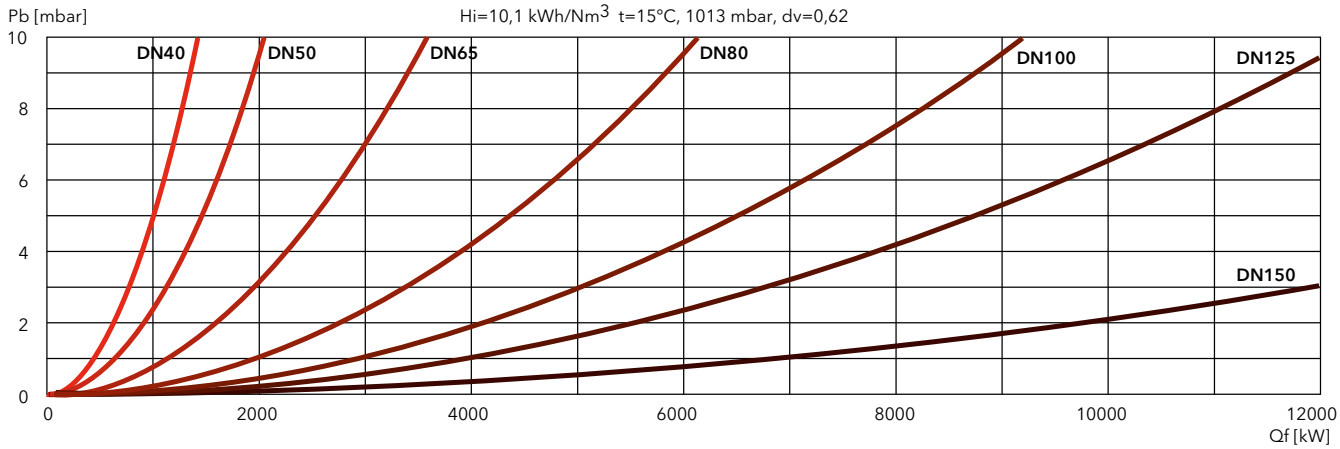

EK EVO

GAS / LIGHT OIL

Low NOx Class 2

EK EVO 6 GL-E / EK EVO 7 GL-E

250 … 4740 kW

Two stage progressive/modulating electronic in gas and in light oil

- **Fuels:** natural gas, Hi = 6,99 … 11,39 kWh/Nm³;
  light oil, viscosity 6 mm²/s at 20°C, Hi = 11,86 kWh/kg
- **Emission class:** Low NOx class 2 (≤120 mg/kWh) according to EN676 in gas
  Low NOx class 2 (≤185 mg/kWh) according to EN267 in light oil
- **Protection level:** IP 41

TECHNICAL DATA

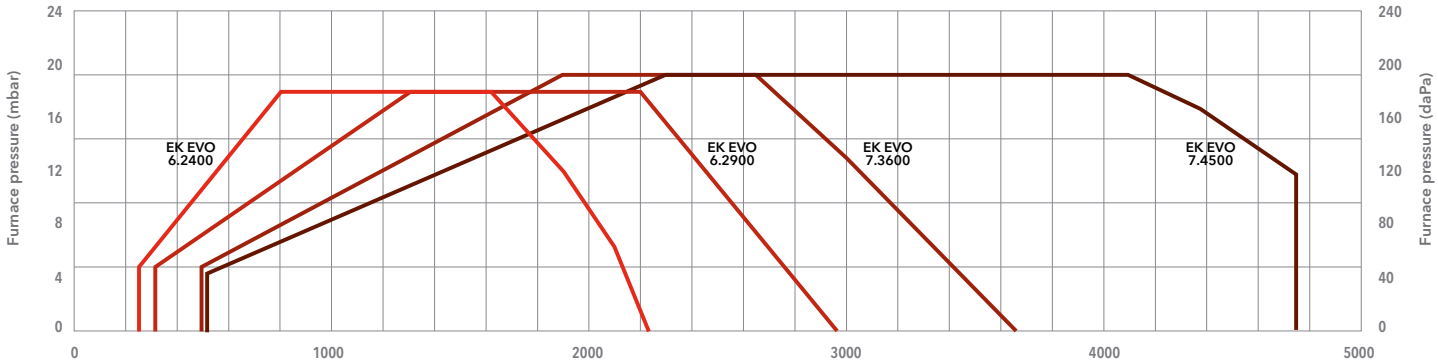

Test conditions conforming to EN676 and EN267 - Temperature: 20°C - Pressure: 1013,5 mbar - Altitude: 0 m a.s.l.

		EK EVO 6.2400 GL-E	EK EVO 6.2900 GL-E	EK EVO 7.3600 GL-E	EK EVO 7.4500 GL-E
Operating range gas		250 – 2230 kW	320 – 2970 kW	490 – 3650 kW	510 – 4740 kW
Operating range oil		510 – 2030 kW	650 – 2970 kW	900 – 3650 kW	1300 – 4740 kW
Gas pressure		50 – 500 mbar (50 – 360 mbar for d452 and d453)		50 – 500 mbar (50 – 360 mbar for d452 and d453)	
Gas connection		DN65	DN65	DN65	DN65
Control box / flame detector		BT300 / QRA2	BT300 / QRA2	BT300 / QRA2	BT300 / QRA2
Auxiliary voltage		1NPE AC 230 V – 50 Hz TN-S	1NPE AC 230 V – 50 Hz TN-S	1NPE AC 230 V – 50 Hz TN-S	1NPE AC 230 V – 50 Hz TN-S
Power supply		3PE AC 400 V – 50 Hz	3PE AC 400 V – 50 Hz	3PE AC 400 V – 50 Hz	3PE AC 400 V – 50 Hz
Fan motor		50 Hz – 3 kW	50 Hz – 4 kW	50 Hz – 5,5 kW	50 Hz – 7,5 kW
Acoustic level		<77 dB(A)	<77 dB(A)	<81 dB(A)	<82,5 dB(A)
CE certificate		0085CL0215	0085CL0215	0085CL0215	0085CL0215
Burner codes (body + head)	KN	**3754276**	**3754277**	**3754278**	**3754279**
	KM	**3754280**	**3754281**	**3754282**	**3754283**
	KL	**3754284**	**3754285**	**3754286**	**3754287**

GAS TRAINS

DUNGS

Model	Code
GT-d452-1"1/2 (*)	3750510
GT-d453-2" (*)	3750511
GT-d454-65	3750512
GT-d455-80	3750513
GT-d456-100	3750514

*: integrated filter

SIEMENS

Model	Code
GT-s451-1"1/2	3750525
GT-s452-2"	3750526
GT-s453-65	3750527
GT-s454-80	3750528
GT-s455-100	3750529
GT-s456-125	3750530

FILTERS

Model	Code
FG-Rp1"1/2	3757199
FG-Rp2"	3757200
FG-DN65	3757198
FG-DN80	3757201
FG-DN100	3757195
FG-DN125	3757209

Pressure drops graphs: see following pages
Dimensions of gas trains and gas filters: see page 310

DIMENSIONS (mm)

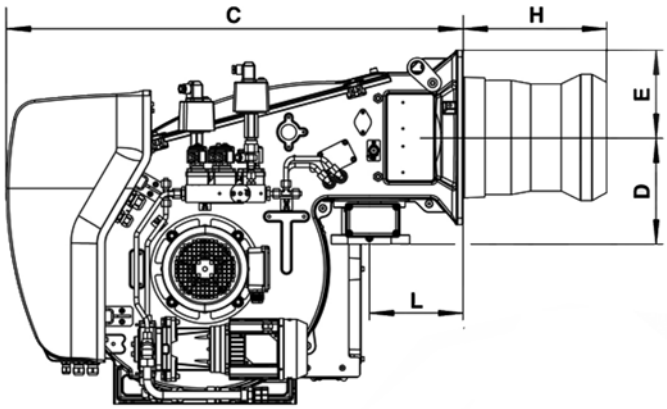

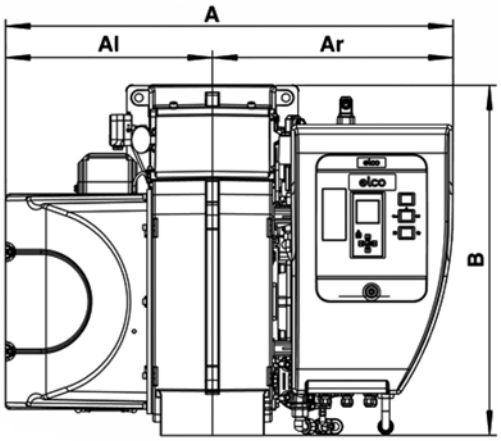

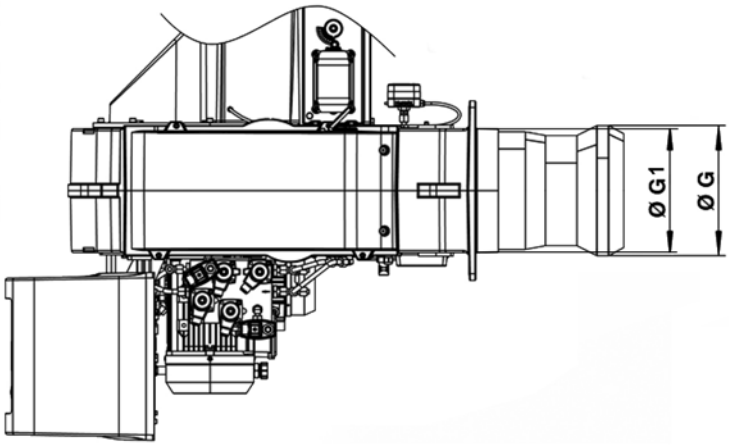

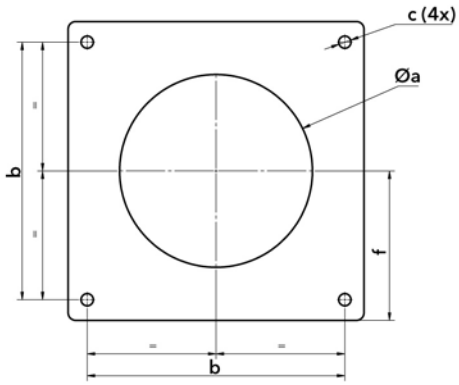

Model	A	Al	Ar	B	C	D	E	ØG	ØG1	H			L	Øa	b	c	f
										KN	KM	KL					
EK EVO 6.2400 GL-E	1035	479	556	812	1050	245	200	290	277	300	450	570	215	300-340	340	M16	200
EK EVO 6.2900 GL-E	1035	479	556	812	1050	245	200	310	277	300	450	570	215	320-340	340	M16	200
EK EVO 7.3600 GL-E	1107	510	597	941	1130	276	235	340	339	370	500	630	225	350-400	400	M16	235
EK EVO 7.4500 GL-E	1107	510	597	941	1130	276	235	370	339	370	500	630	225	380-400	400	M16	235

PACKAGING

The burner is delivered on a pallet with:
- burner body with mounted combustion head
- gas train and filter
- boiler fixing accessories
- technical documentation

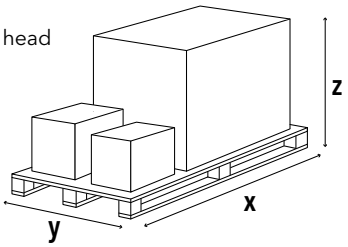

Model	Dimensions (mm)			Gross weight (kg)
	X	Y	Z	
EK EVO 6.2400 GL-E	2046	1414	1233	300
EK EVO 6.2900 GL-E	2046	1414	1233	300
EK EVO 7.3600 GL-E	2046	1414	1233	350
EK EVO 7.4500 GL-E	2046	1414	1233	350

EK EVO 6 GL-E / EK EVO 7 GL-E

250 ... 4740 kW
Two stage progressive/modulating electronic in gas and in light oil

PRESSURE LOSS [BURNER HEAD + GAS TRAIN] (mbar)

EK EVO 6.2400 GL-E

DUNGS

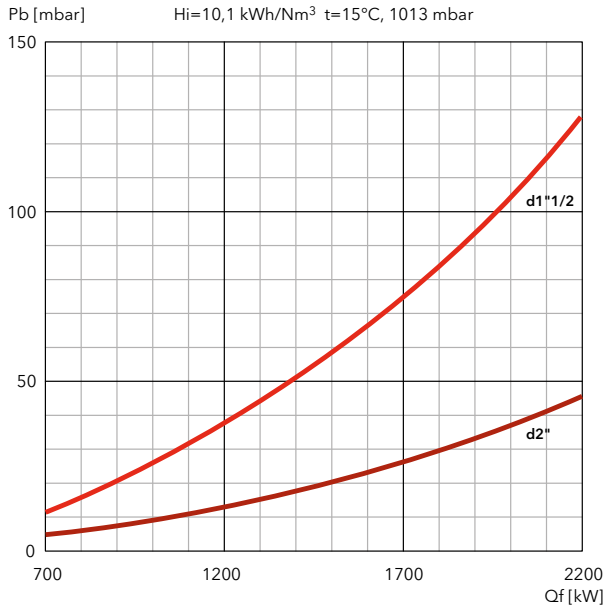

SIEMENS

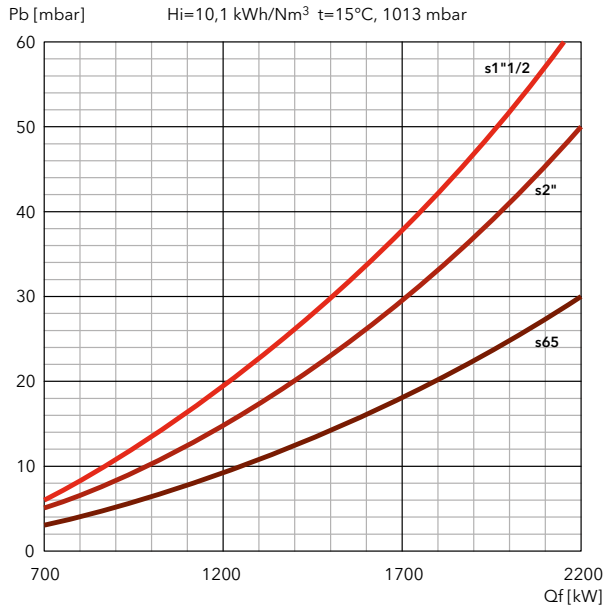

EK EVO 6.2900 GL-E

DUNGS

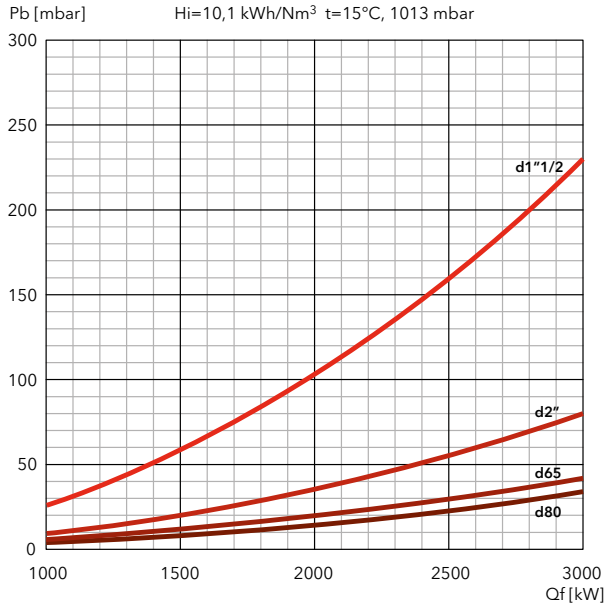

SIEMENS

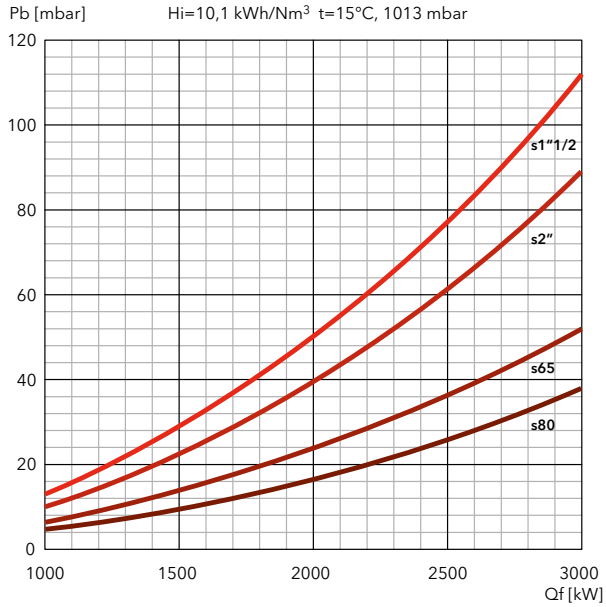

FILTERS

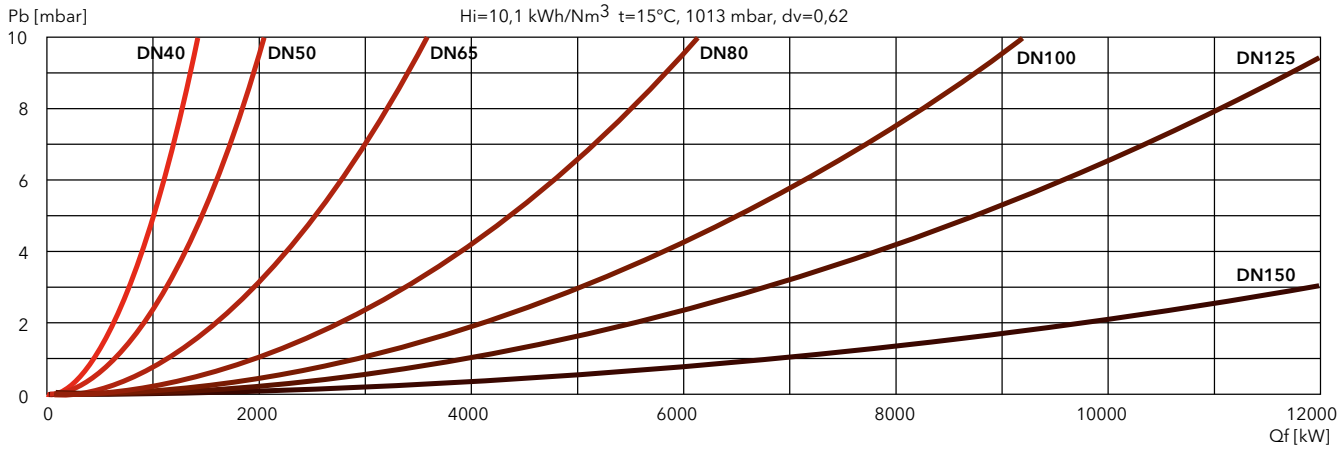

PRESSURE LOSS [BURNER HEAD + GAS TRAIN] (mbar)

EK EVO 7.3600 GL-E

DUNGS

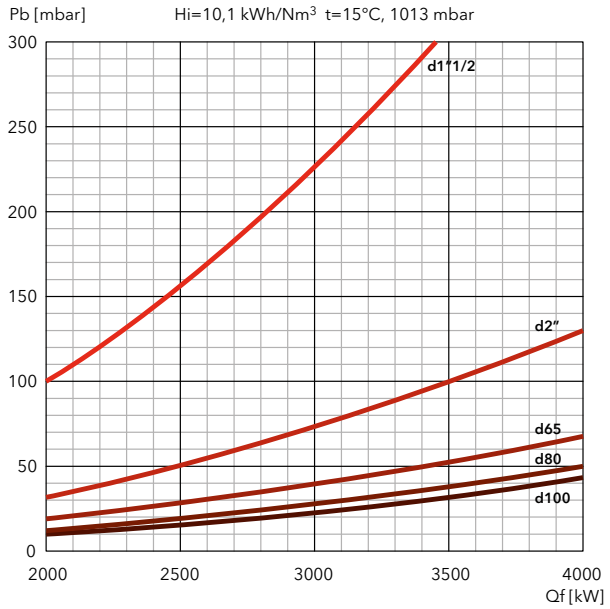

SIEMENS

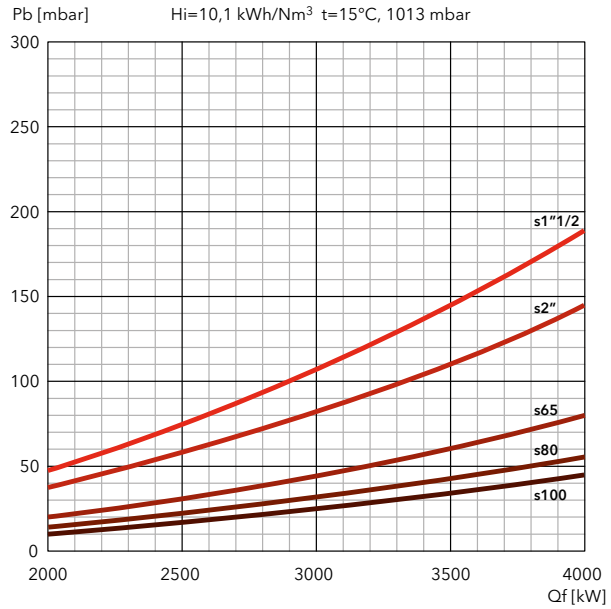

EK EVO 7.4500 GL-E

DUNGS

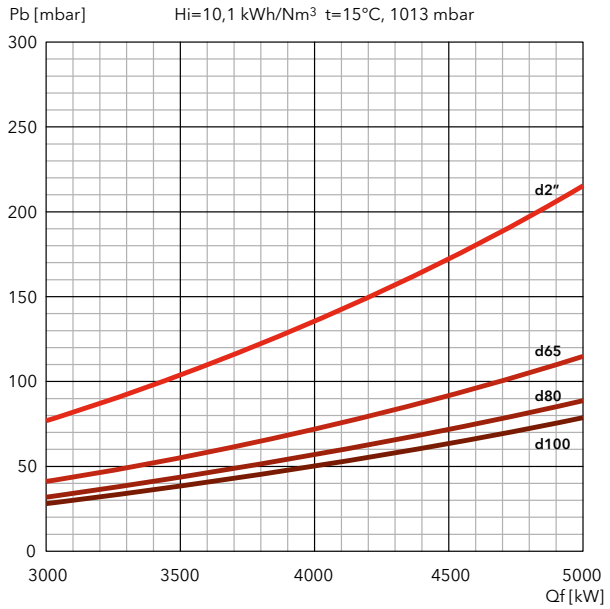

SIEMENS

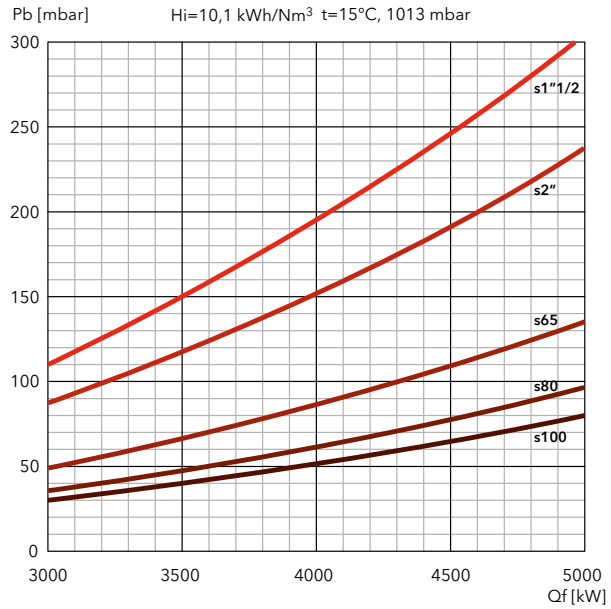

FILTERS

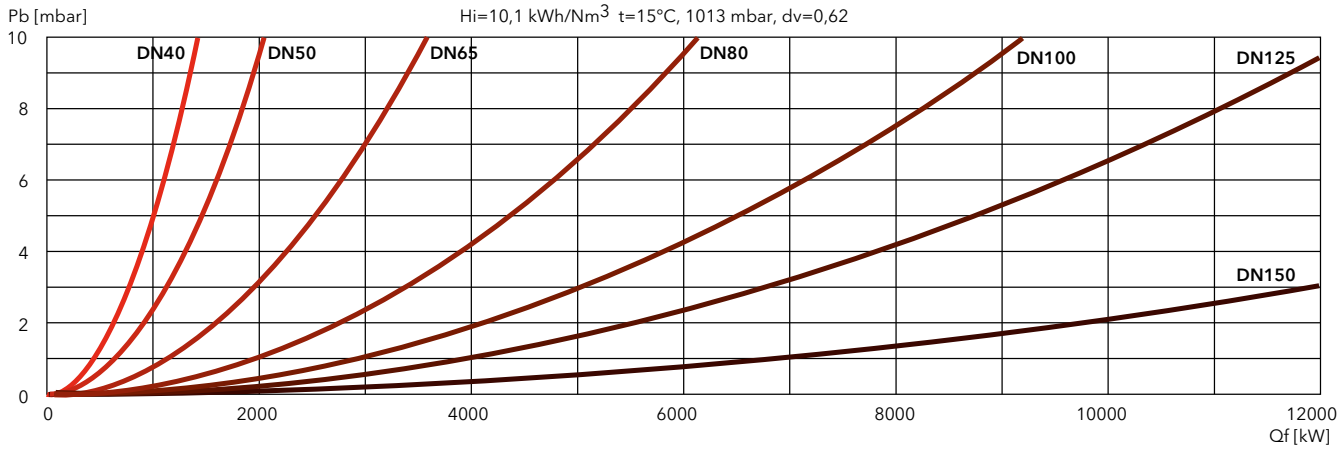

EK EVO

GAS / LIGHT OIL

Low NOx Class 2

EK EVO 8 GL-E / EK EVO 9 GL-E

790 … 10620 kW
Two stage progressive/modulating electronic in gas and in light oil

- **Fuels:** natural gas, Hi = 6,99 … 11,39 kWh/Nm³;
  light oil, viscosity 6 mm²/s at 20°C, Hi = 11,86 kWh/kg
- **Emission class:** Low NOx class 2 (≤120 mg/kWh) according to EN676 in gas
  Low NOx class 2 (≤185 mg/kWh) according to EN267 in light oil
- **Protection level:** IP 41

TECHNICAL DATA

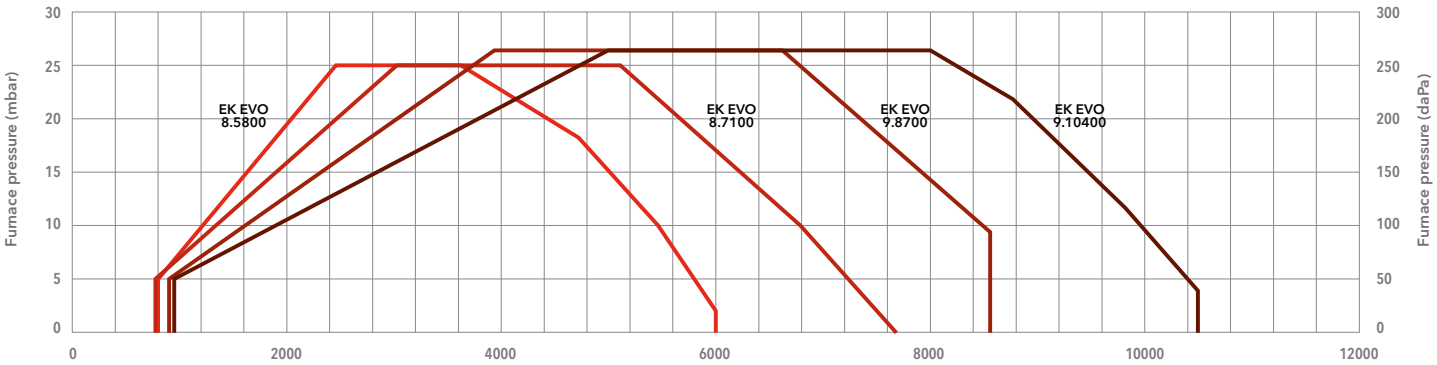

Test conditions conforming to EN676 and EN267 - Temperature: 20°C - Pressure: 1013,5 mbar - Altitude: 0 m a.s.l.

Power (kW)

		EK EVO 8.5800 GL-E	EK EVO 8.7100 GL-E	EK EVO 9.8700 GL-E	EK EVO 9.10400 GL-E
Operating range gas		800 – 6000 kW	790 – 7700 kW	880 – 8530 kW	910 – 10620 kW
Operating range oil		1210 – 6000 kW	1450 – 7700 kW	2400 – 8530 kW	2820 – 10620 kW
Gas pressure		100 – 500 mbar (100 – 360 mbar for d457)		100 – 500 mbar (100 – 360 mbar for d457)	
Gas connection		DN100	DN100	DN100	DN100
Control box / flame detector		BT300 / QRA2	BT300 / QRA2	BT300 / QRA2	BT300 / QRA2
Auxiliary voltage		1NPE AC 230 V – 50 Hz TN-S	1NPE AC 230 V – 50 Hz TN-S	1NPE AC 230 V – 50 Hz TN-S	1NPE AC 230 V – 50 Hz TN-S
Power supply		3PE AC 400 V – 50 Hz	3PE AC 400 V – 50 Hz	3PE AC 400 V – 50 Hz	3PE AC 400 V – 50 Hz
Fan motor		50 Hz – 11 kW	50 Hz – 15 kW	50 Hz – 18,5 kW	50 Hz – 22 kW
Acoustic level		<80,5 dB(A)	<82,6 dB(A)	<85,5 dB(A)	<86,2 dB(A)
CE certificate		0085CL0215	0085CL0215	0085CL0215	0085CL0215
Burner codes (body + head)	KN	**3754601**	**3754602**	**3754603**	**3754604**
	KM	**3754605**	**3754606**	**3754607**	**3754608**
	KL	**3754609**	**3754610**	**3754611**	**3754612**

GAS TRAINS

DUNGS

Model	Code
GT-d457-2" (*)	3750515
GT-d458-65	3750516
GT-d459-80	3750517
GT-d460-100	3750518
GT-d125	on request

*: integrated filter

SIEMENS

Model	Code
GT-s456-1"1/2	3750536
GT-s457-2"	3750537
GT-s458-65	3750538
GT-s459-80	3750539
GT-s460-100	3750540
GT-s461-125	3750541

FILTERS

Model	Code
FG-Rp1"1/2	3757199
FG-Rp2"	3757200
FG-DN65	3757198
FG-DN80	3757201
FG-DN100	3757195
FG-DN125	3757209

i **Pressure drops graphs**: see following pages
Dimensions of gas trains and gas filters: see page 311

DIMENSIONS (mm)

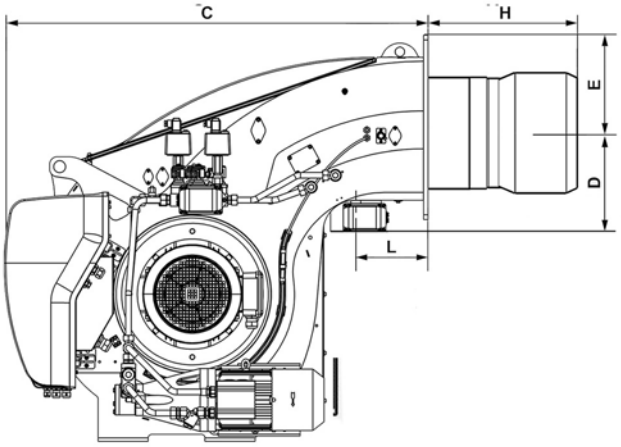

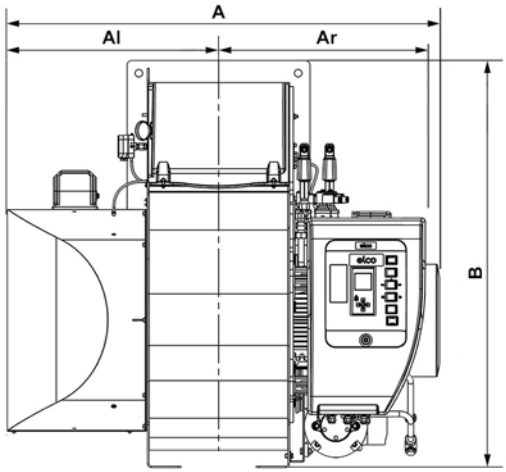

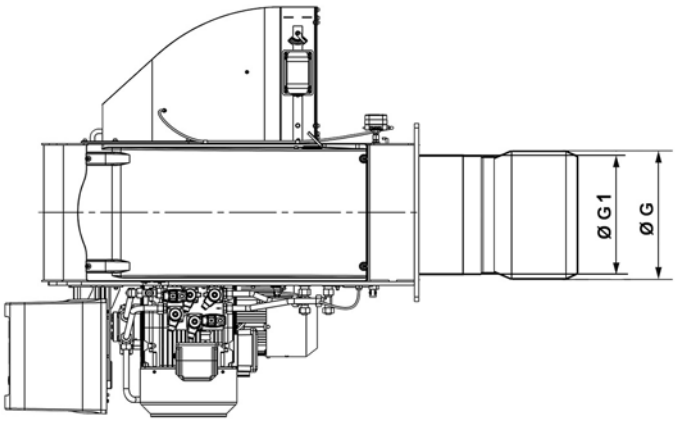

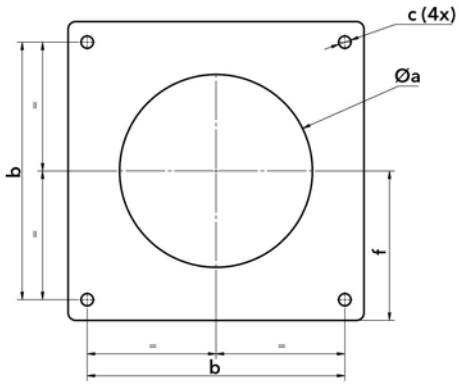

Model	A	Al	Ar	B	C	D	E	ØG	ØG1	H			L	Øa	b	c	f
										KN	KM	KL					
EK EVO 8.5800 GL-E	1325	670	655	1231	1351	391	307	400	369	562	702	842	230	430-480	505	M20	293
EK EVO 8.7100 GL-E	1325	670	655	1231	1351	391	307	415	369	583	723	863	230	445-480	505	M20	293
EK EVO 9.8700 GL-E	1336	670	666	1291	1348	332	288	431,5	438,5	353	503	653	230	445-480	505	M20	293
EK EVO 9.10400 GL-E	1400	670	731	1291	1348	332	293	431,5	438,5	353	503	653	230	445-480	505	M20	293

PACKAGING

The burner is delivered on a pallet with:
- burner body with mounted combustion head
- gas train and filter
- boiler fixing accessories
- technical documentation

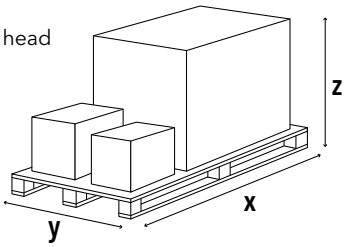

Model	Dimensions (mm)			Gross weight (kg)
	X	Y	Z	
EKEVO 8.5800 GL-E	2300	1500	1573	580
EKEVO 8.7100 GL-E	2300	1500	1573	580
EKEVO 9.8700 GL-E	2300	1500	1573	700
EKEVO 9.10400 GL-E	2300	1500	1573	700

EK EVO 8 GL-E / EK EVO 9 GL-E

790 ... 10620 kW
Two stage progressive/modulating electronic in gas and in light oil

PRESSURE LOSS [BURNER HEAD + GAS TRAIN] (mbar)

EK EVO 8.5800 GL-E

DUNGS

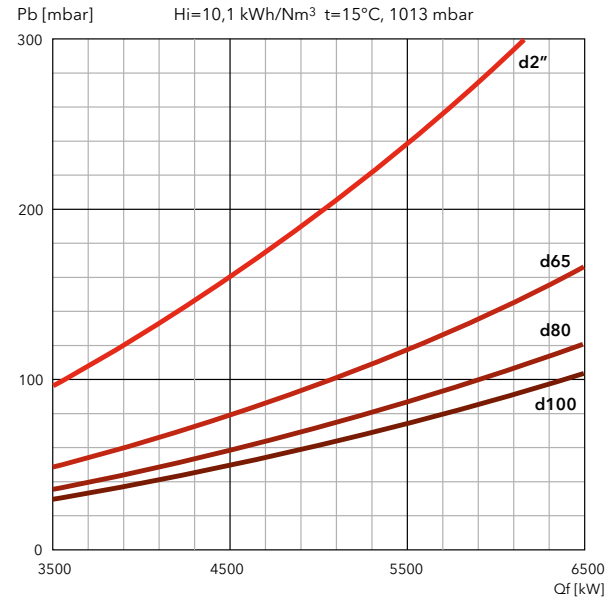

SIEMENS

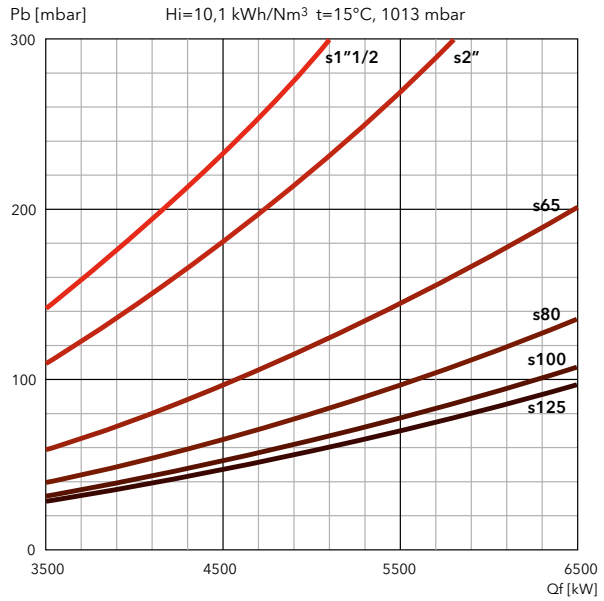

EK EVO 8.7100 GL-E

DUNGS

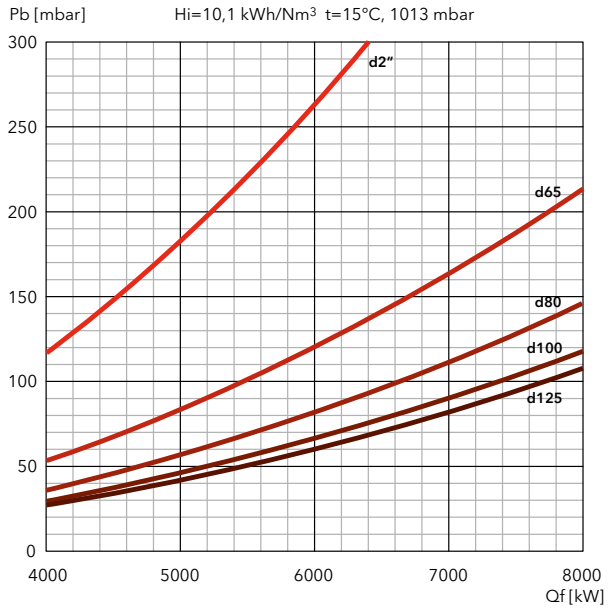

SIEMENS

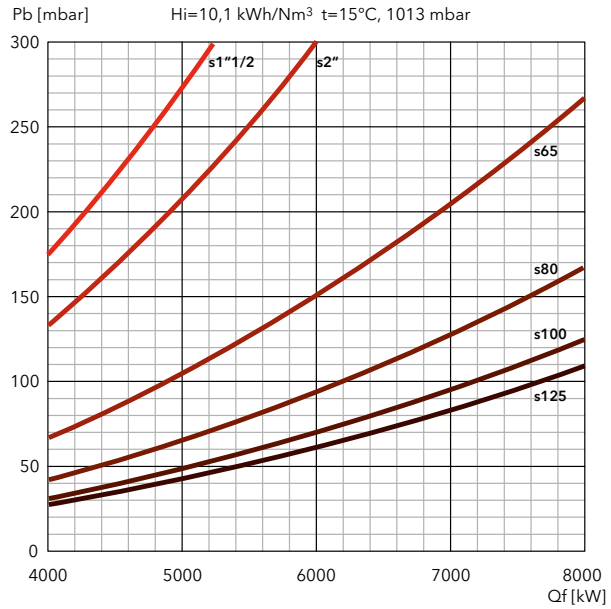

FILTERS

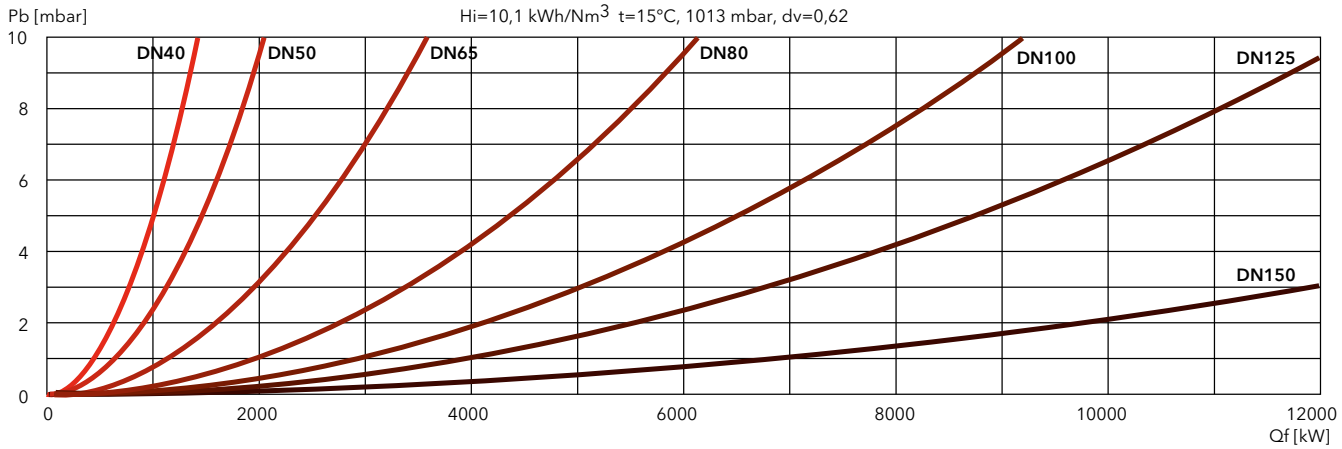

PRESSURE LOSS [BURNER HEAD + GAS TRAIN] (mbar)

EK EVO 9.8700 GL-E

DUNGS

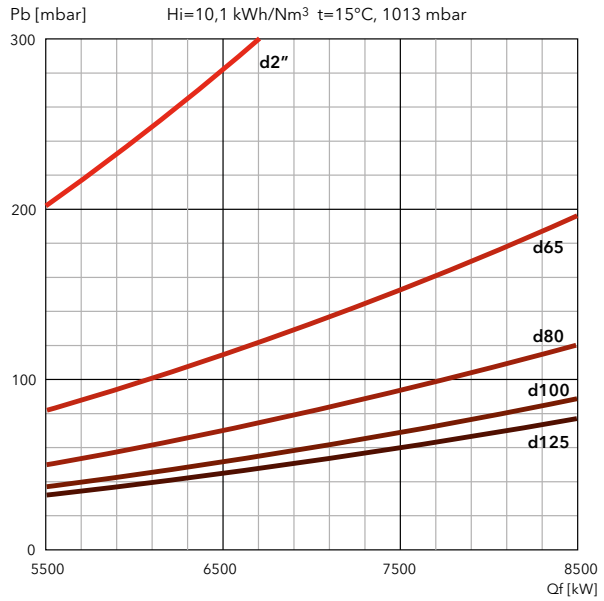

SIEMENS

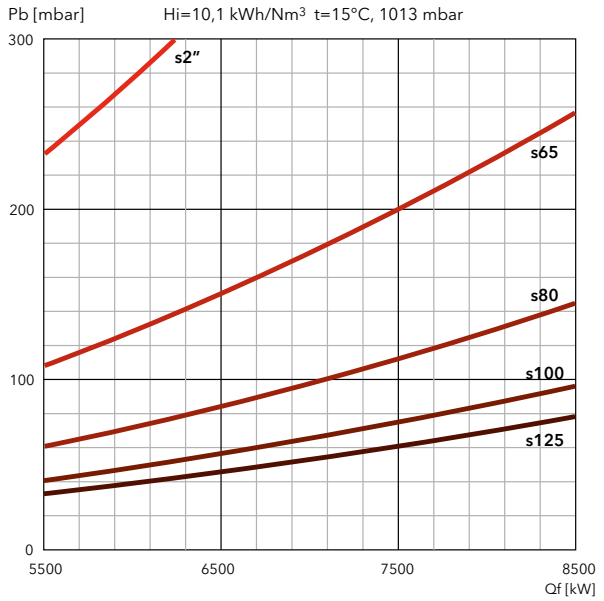

EK EVO 9.10400 GL-E

DUNGS

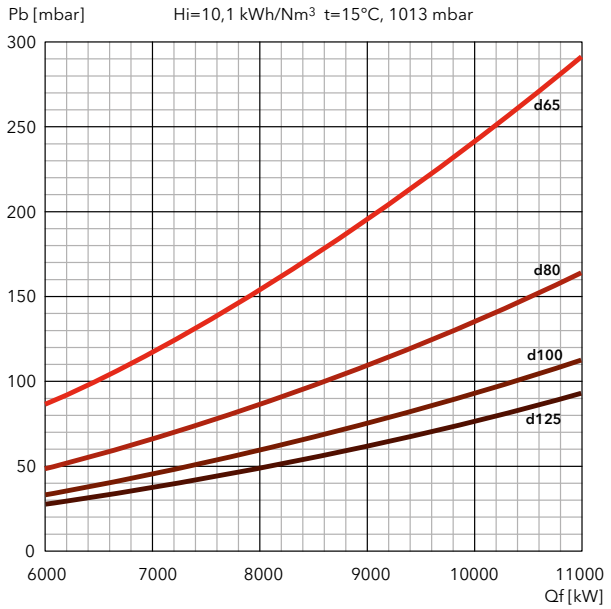

SIEMENS

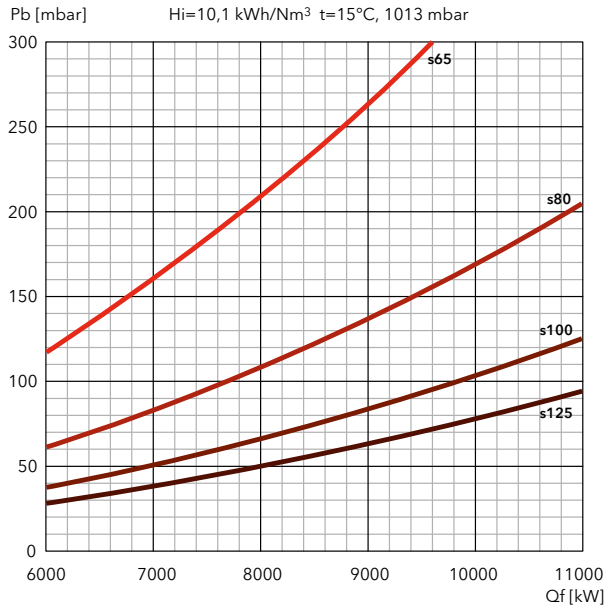

FILTERS

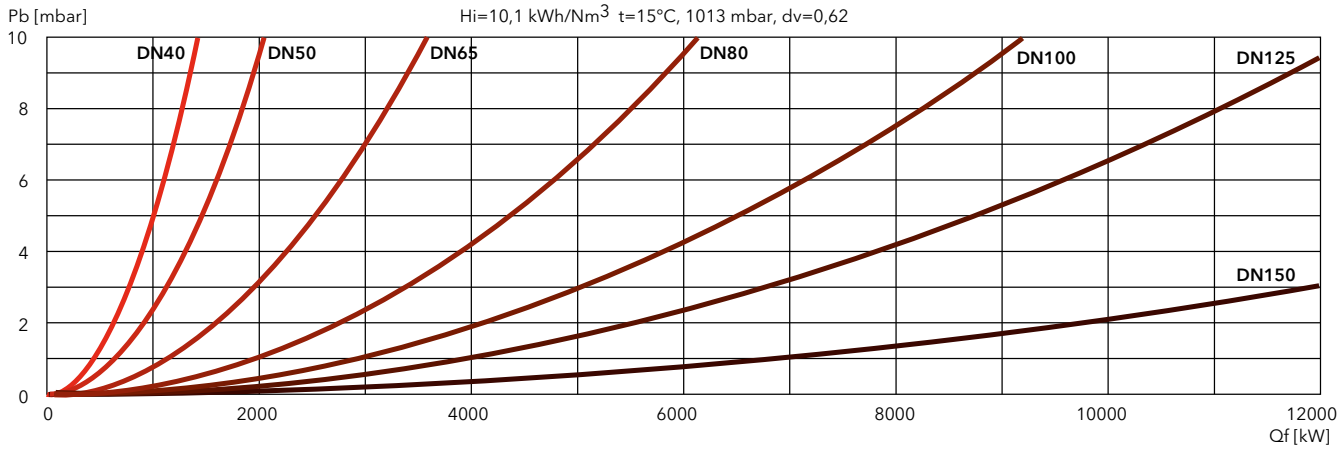

EK EVO

LIGHT OIL

Low NOx Class 3

EK EVO 6 L-EF3 / EK EVO 7 L-EF3

360 ... 4820 kW
Two stage progressive/modulating electronic

- **Fuels:** light oil, viscosity 6 mm²/s at 20°C, Hi = 11,86 kWh/kg
- **Emission class:** Low NOx class 3 (≤120 mg/kWh) according to EN267
- **Protection level:** IP 41

TECHNICAL DATA

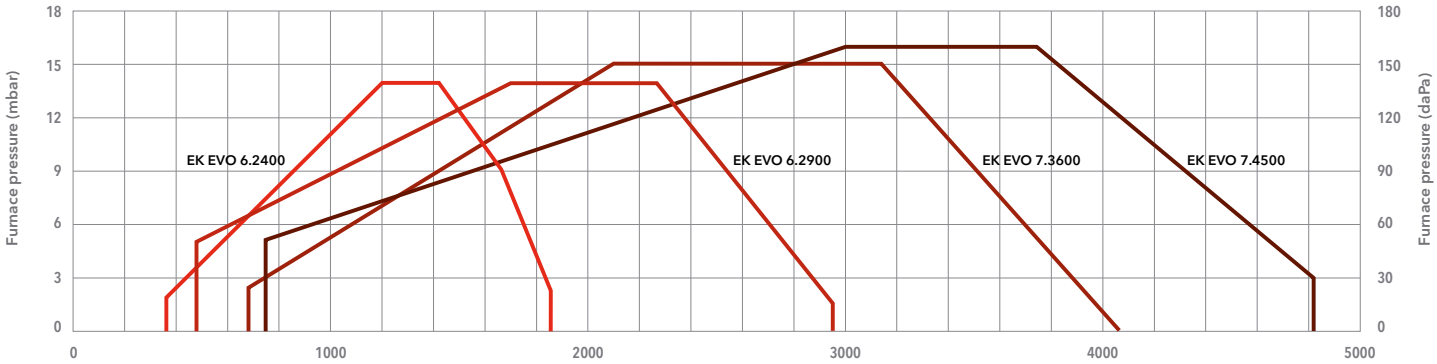

Test conditions conforming to EN267 - Temperature: 20°C - Pressure: 1013,5 mbar - Altitude: 0 m a.s.l.

Power (kW)

		EK EVO 6.2400 L-EF3	EK EVO 6.2900 L-EF3	EK EVO 7.3600 L-EF3	EK EVO 7.4500 L-EF3
Operating range		360 – 1850 kW	480 – 2950 kW	680 – 4070 kW	740 – 4820 kW
Fuel connection		DN20 x 1500 mm / R 1/2"	DN20 x 1500 mm / R 1/2"	DN20 x 1500 mm / R 3/4"	DN20 x 1500 mm / R 3/4"
Auxiliary voltage		1NPE AC 230 V – 50 Hz TN-S	1NPE AC 230 V – 50 Hz TN-S	1NPE AC 230 V – 50 Hz TN-S	1NPE AC 230 V – 50 Hz TN-S
Power supply		3PE AC 400 V – 50 Hz	3PE AC 400 V – 50 Hz	3PE AC 400 V – 50 Hz	3PE AC 400 V – 50 Hz
Control box / flame detector		BT300 / FFS08	BT300 / FFS08	BT300 / FFS08	BT300 / FFS08
Fan motor		50 Hz – 3 kW	50 Hz – 4 kW	50 Hz – 7,5 kW	50 Hz – 7,5 kW
Pump		SUNTEC TA3	SUNTEC TA3	SUNTEC TA4	SUNTEC TA5
Motor pump		50 Hz – 0,75 kW	50 Hz – 0,75 kW	50 Hz – 1,1 kW	50 Hz – 1,5 kW
Acoustic level		<76 dB(A)	<77 dB(A)	<83 dB(A)	<81 dB(A)
CE certificate		0085CL0215	0085CL0215	0085CL0215	0085CL0215
Burner codes (body + head)	**KN**	**3756774**	**3756775**	**3756776**	**3756777**
	KM	**3756779**	**3756780**	**3756781**	**3756782**
	KL	**3756783**	**3756784**	**3756785**	**3756786**

DIMENSIONS (mm)

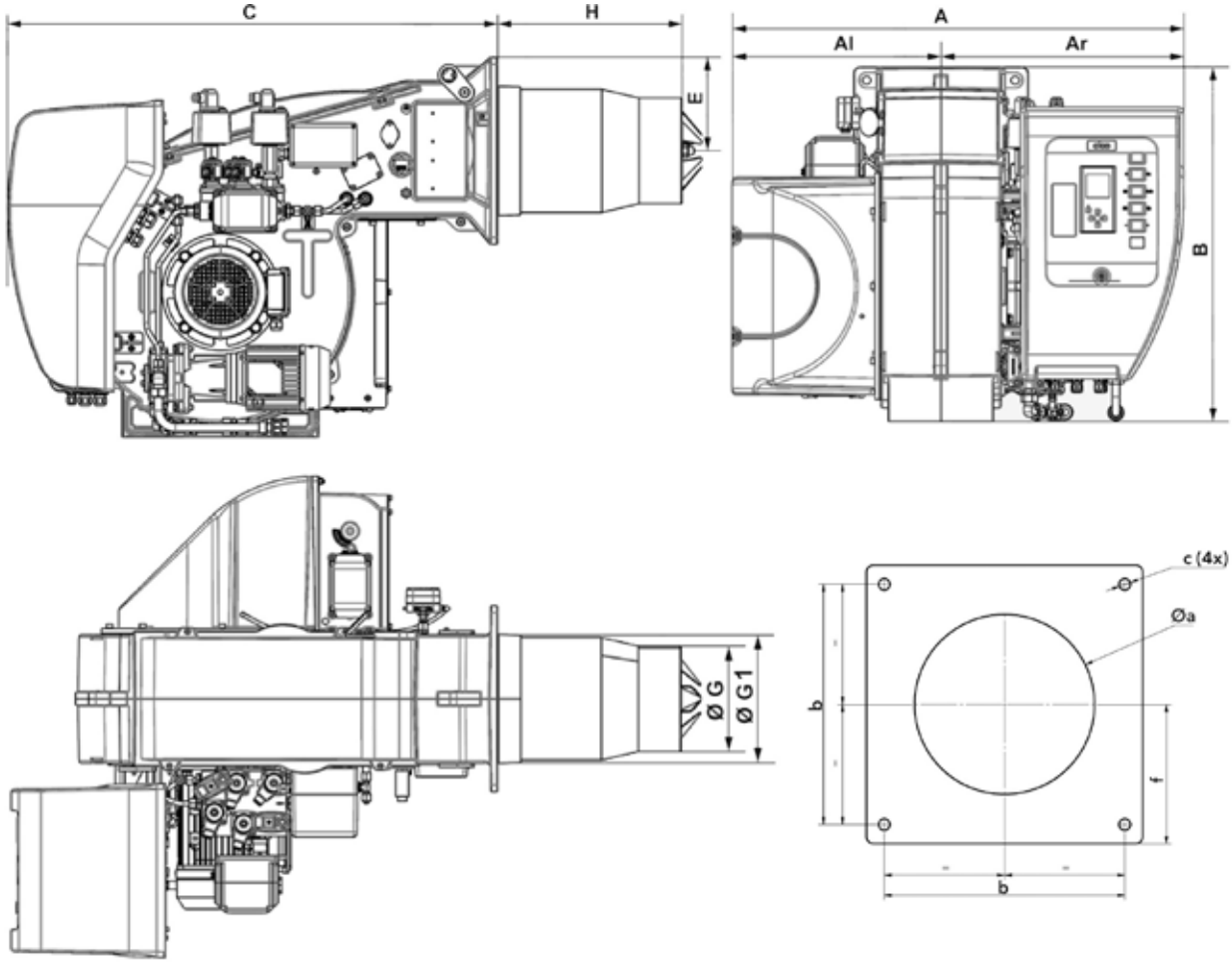

Model	A	Al	Ar	B	C	E	ØG	ØG1	H			Øa	b	c	f
									KN	KM	KL				
EK EVO 6.2400 L-EF3	1035	479	556	812	1046	200	227	290	400	520	640	300-340	340	M16	200
EK EVO 6.2900 L-EF3	1035	479	556	812	1046	200	263	290	400	520	640	300-340	340	M16	200
EK EVO 7... L-EF3	1107	510	597	941	1121	255	325	325	375	505	635	360-400	400	M16	235

PACKAGING

The burner is delivered on a pallet with:
- burner body with mounted combustion head
- boiler fixing accessories
- technical documentation

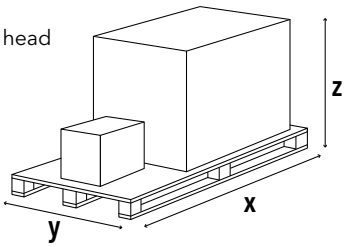

Model	Dimensions (mm)			Gross weight (kg)
	X	Y	Z	
EK EVO 6.2400 L-EF3	2046	1414	1233	300
EK EVO 6.2900 L-EF3	2046	1414	1233	300
EK EVO 7.3600 L-EF3	2046	1414	1233	350
EK EVO 7.4500 L-EF3	2046	1414	1233	350

EK EVO

LIGHT OIL

Low NOx Class 3

EK EVO 8 L-EF3 / EK EVO 9 L-EF3

1100 … 6600 kW
Two stage progressive/modulating electronic

- **Fuels:** light oil, viscosity 6 mm²/s at 20°C, Hi = 11,86 kWh/kg
- **Emission class:** Low NOx class 3 (≤120 mg/kWh) according to EN267
- **Protection level:** IP 41

TECHNICAL DATA

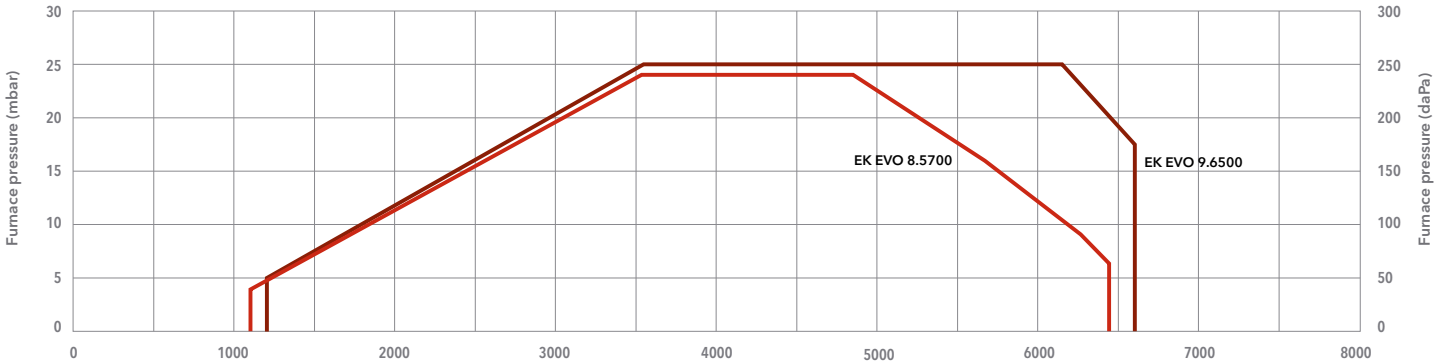

Test conditions conforming to EN267 - Temperature: 20°C - Pressure: 1013,5 mbar - Altitude: 0 m a.s.l.

Power (kW)

		EK EVO 8.5700 L-EF3	EK EVO 9.6500 L-EF3
Operating range		1100 – 6450 kW	1200 – 6600 kW
Fuel connection		DN20 x 1500 mm / R 3/4"	DN20 x 1500 mm / R 3/4"
Auxiliary voltage		1NPE AC 230 V – 50 Hz TN-S	1NPE AC 230 V – 50 Hz TN-S
Power supply		3PE AC 400 V – 50 Hz	3PE AC 400 V – 50 Hz
Control box / flame detector		BT300 / FFS08	BT300 / FFS08
Fan motor		50 Hz – 15 kW	50 Hz – 22 kW
Pump		SMG1630 – 1700 l/h	SMG1630 – 1700 l/h
Motor pump		50 Hz – 3 kW	50 Hz – 3 kW
Acoustic level		<83,9 dB(A)	<87,9 dB(A)
CE certificate		0085CL0215	0085CL0215
Burner codes (body + head)	KN	**3756799**	**3756800**
	KM	**3756803**	**3756804**
	KL	**3756807**	**3756808**

DIMENSIONS (mm)

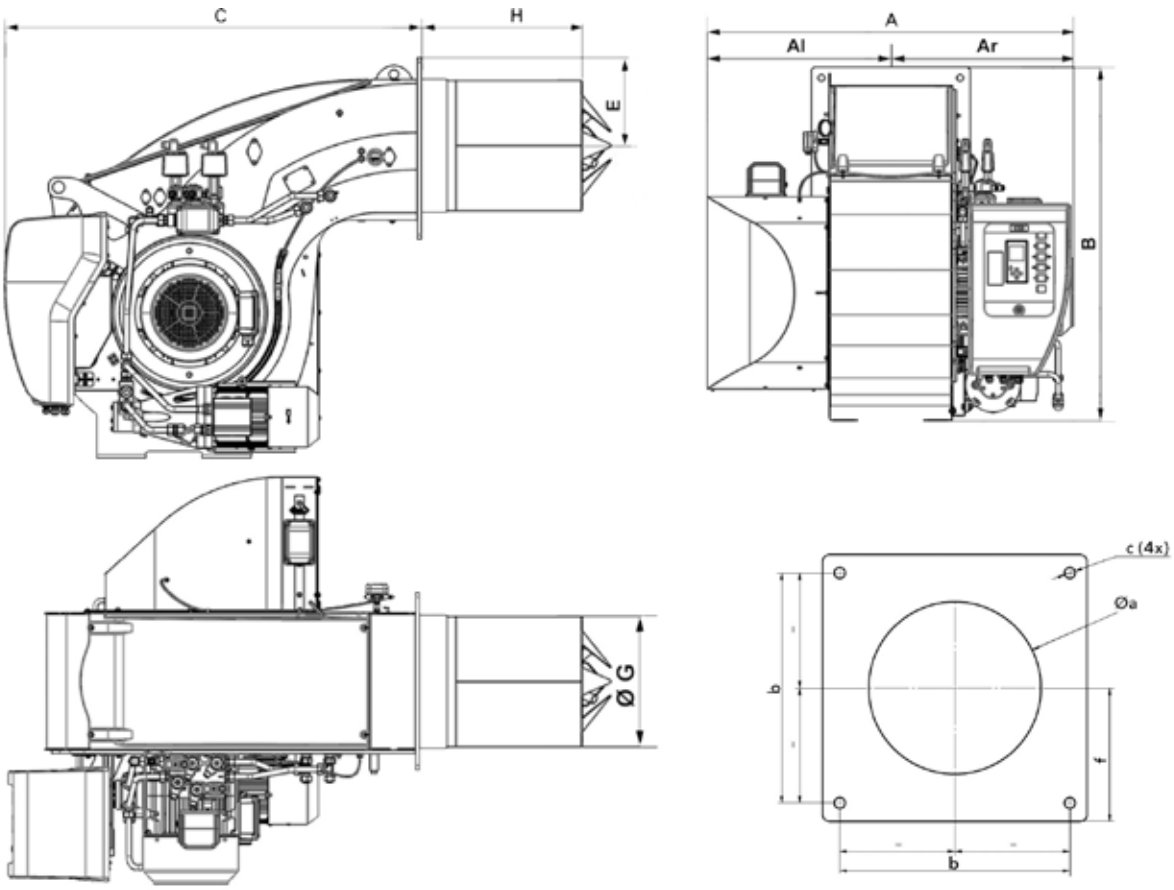

Model	A	Al	Ar	B	C	E	ØG	H			Øa	b	c	f
								KN	KM	KL				
EK EVO 8.5700 L-EF3	1325	670	655	1231	1351	293	369	528	668	808	380-410	505	M20	293
EK EVO 9.6500 L-EF3	1400	670	730	1291	1348	293	431,5	543	693	843	445-480	505	M20	293

PACKAGING

The burner is delivered on a pallet with:
- burner body with mounted combustion head
- boiler fixing accessories
- technical documentation

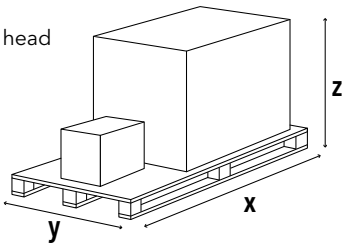

Model	Dimensions (mm)			Gross weight (kg)
	X	Y	Z	
EK EVO 8.5700 L-EF3	2300	1500	1573	580
EK EVO 9.6500 L-EF3	2300	1500	1573	700

EK EVO

LIGHT OIL

Low NOx Class 3

EK EVO 9 L-EUF

1800 … 9570 kW
Two stage progressive/modulating electronic

- **Fuels:** light oil, viscosity 6 mm²/s at 20°C, Hi = 11,86 kWh/kg
- **Emission class:** Low NOx class 3 (≤120 mg/kWh) according to EN267
- **Protection level:** IP 41

TECHNICAL DATA

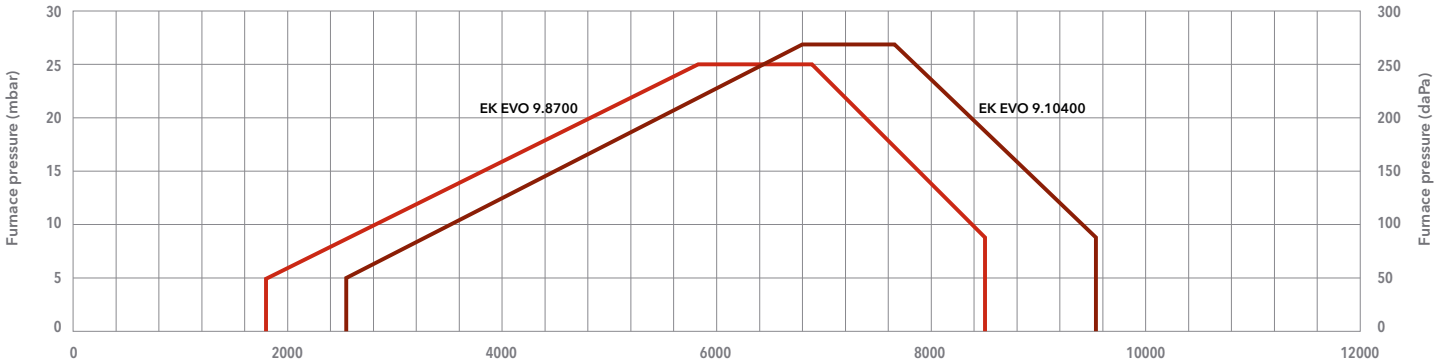

Test conditions conforming to EN267 - Temperature: 20°C - Pressure: 1013,5 mbar - Altitude: 0 m a.s.l.

Power (kW)

		EK EVO 9.8700 L-EUF	EK EVO 9.10400 L-EUF
Operating range		1800 – 8500 kW	2550 – 9570 kW
Fuel connection		DN20 x 1500 mm / R 3/4"	DN25 x 1500 mm / R 1"
Auxiliary voltage		1NPE AC 230 V – 50 Hz TN-S	1NPE AC 230 V – 50 Hz TN-S
Power supply		3PE AC 400 V – 50 Hz	3PE AC 400 V – 50 Hz
Control box / flame detector		BT300 / FFS08	BT300 / FFS08
Fan motor		50 Hz – 18,5 kW	50 Hz – 22 kW
Pump		SMG1630 – 1700 l/h	SMG1631 – 2200 l/h
Motor pump		50 Hz – 3 kW	50 Hz – 4 kW
Acoustic level		<85,9 dB(A)	<86,6 dB(A)
CE certificate		0085CL0215	0085CL0215
Burner codes (body + head)	KN	**3756801**	**3756802**
	KM	**3756805**	**3756806**
	KL	**3756809**	**3756810**

DIMENSIONS (mm)

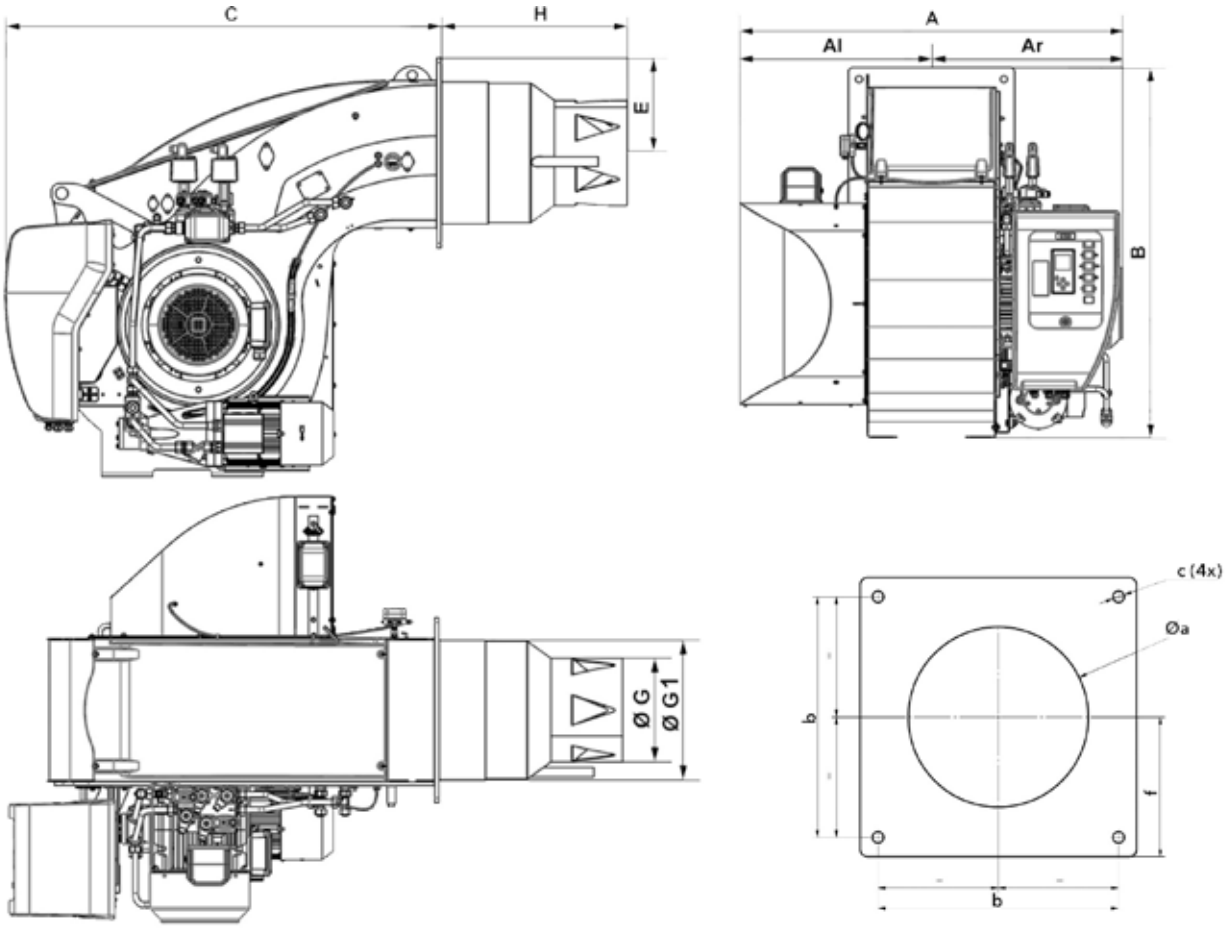

Model	A	Al	Ar	B	C	E	ØG	ØG1	H			Øa	b	c	f
									KN	KM	KL				
EK EVO 9.8700 L-EUF	1336	670	666	1291	1348	293	320	431,5	575	725	875	445-480	505	M20	293
EK EVO 9.10400 L-EUF	1400	670	730	1291	1348	293	330	431,5	575	725	875	445-480	505	M20	293

PACKAGING

The burner is delivered on a pallet with:
- burner body with mounted combustion head
- boiler fixing accessories
- technical documentation

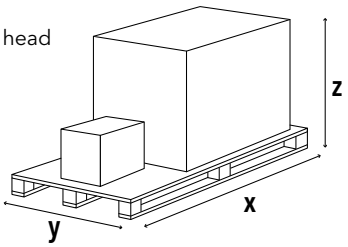

Model	Dimensions (mm)			Gross weight (kg)
	X	Y	Z	
EK EVO 9.8700 L-EUF	2300	1500	1573	700
EK EVO 9.10400 L-EUF	2300	1500	1573	700

EK EVO

LIGHT OIL

Low NOx Class 2

EK EVO 6 L-E / EK EVO 7 L-E

510 ... 4900 kW
Two stage progressive/modulating electronic

- **Fuels:** light oil, viscosity 6 mm²/s at 20°C, Hi = 11,86 kWh/kg
- **Emission class:** Low NOx class 2 (≤185 mg/kWh) according to EN267
- **Protection level:** IP 41

TECHNICAL DATA

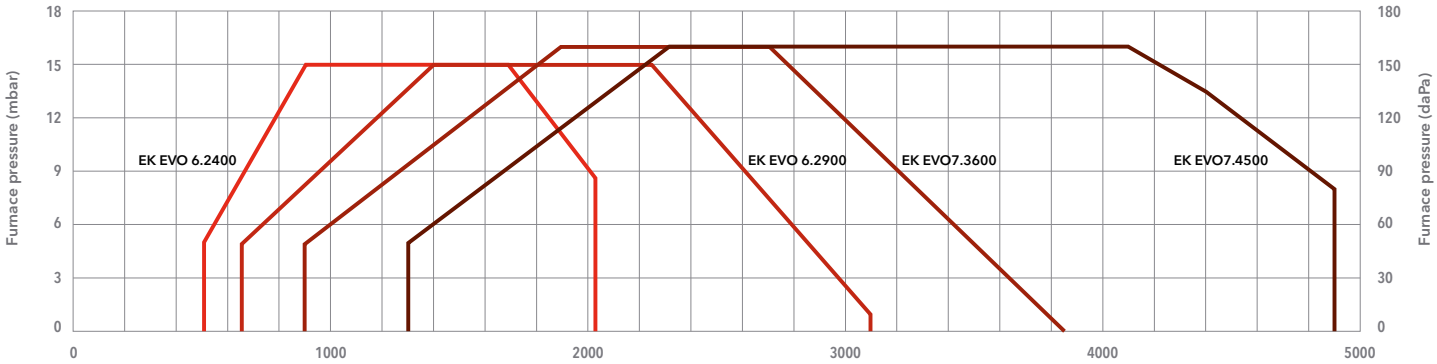

Test conditions conforming to EN267 - Temperature: 20°C - Pressure: 1013,5 mbar - Altitude: 0 m a.s.l.

		EK EVO 6.2400 L-E	EK EVO 6.2900 L-E	EK EVO 7.3600 L-E	EK EVO 7.4500 L-E
Operating range		510 – 2030 kW	650 – 3100 kW	900 – 3850 kW	1300 – 4900 kW
Fuel connection		DN20 x 1500 mm / R 1/2"	DN20 x 1500 mm / R 1/2"	DN20 x 1500 mm / R 3/4"	DN20 x 1500 mm / R 3/4"
Auxiliary voltage		1NPE AC 230 V – 50 Hz TN-S	1NPE AC 230 V – 50 Hz TN-S	1NPE AC 230 V – 50 Hz TN-S	1NPE AC 230 V – 50 Hz TN-S
Power supply		3PE AC 400 V – 50 Hz	3PE AC 400 V – 50 Hz	3PE AC 400 V – 50 Hz	3PE AC 400 V – 50 Hz
Control box / flame detector		BT300 / KLC20	BT300 / KLC20	BT300 / KLC20	BT300 / KLC20
Fan motor		50 Hz – 3 kW	50 Hz – 4 kW	50 Hz – 5,5 kW	50 Hz – 7,5 kW
Pump		SUNTEC TA3	SUNTEC TA3	SUNTEC TA4	SUNTEC TA5
Motor pump		50 Hz – 0,75 kW	50 Hz – 0,75 kW	50 Hz – 1,1 kW	50 Hz – 1,5 kW
Acoustic level		<77 dB(A)	<77 dB(A)	<81 dB(A)	<82,5 dB(A)
CE certificate		0085CL0215	0085CL0215	0085CL0215	0085CL0215
Burner codes (body + head)	**KN**	**3756752**	**3756755**	**3756758**	**3756761**
	KM	**3756751**	**3756754**	**3756757**	**3756760**
	KL	**3756750**	**3756753**	**3756756**	**3756759**

DIMENSIONS (mm)

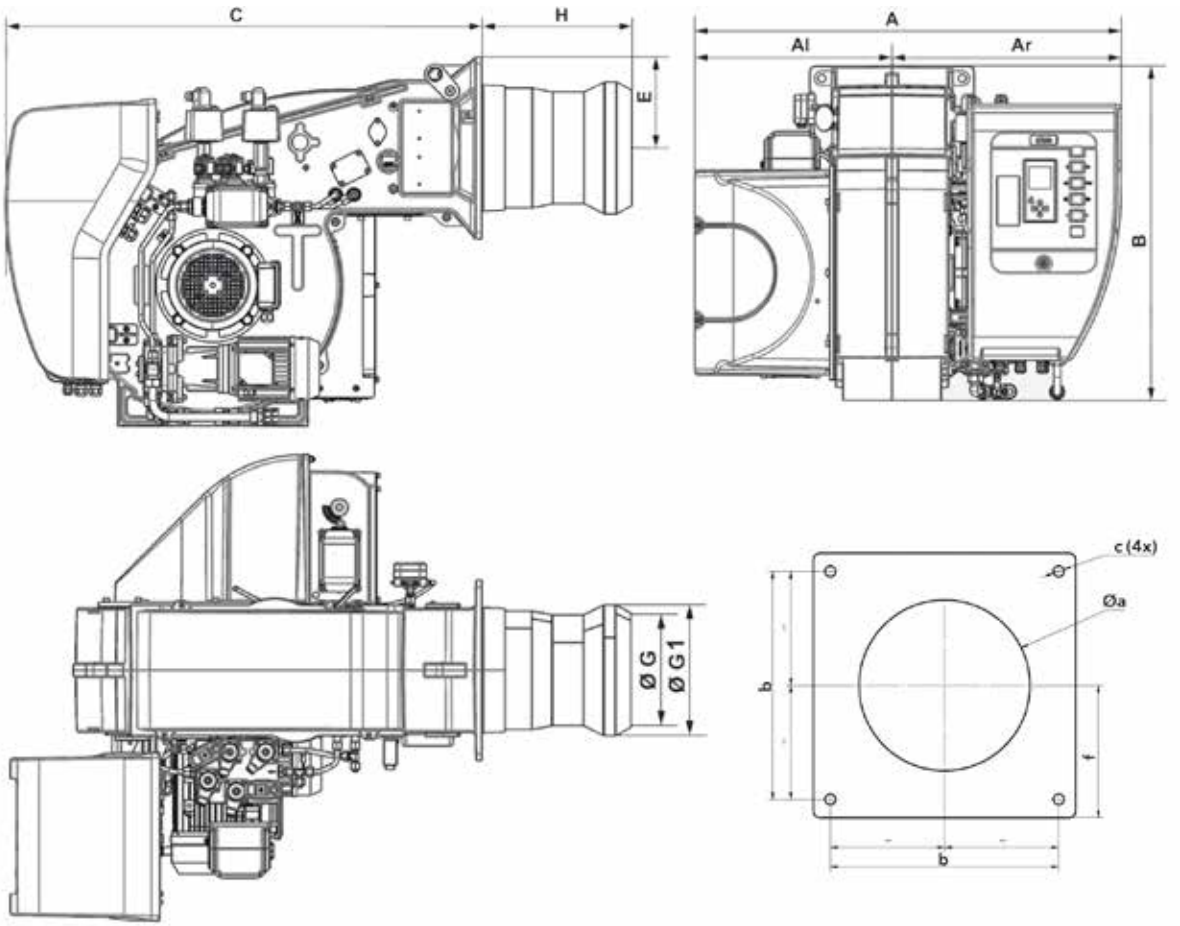

Model	A	Al	Ar	B	C	E	ØG	ØG1	H			Øa	b	c	f
									KN	KM	KL				
EK EVO 6.2400 L-E	1035	479	556	812	1046	200	250	290	330	450	570	300-340	340	M16	200
EK EVO 6.2900 L-E	1035	479	556	812	1046	200	265	310	330	450	570	320-340	340	M16	200
EK EVO 7.3600 L-E	1107	510	597	941	1121	235	280	340	375	505	635	340-400	400	M16	235
EK EVO 7.4500 L-E	1107	510	597	941	1121	235	310	370	375	505	635	380-400	400	M16	235

PACKAGING

The burner is delivered on a pallet with:
- burner body with mounted combustion head
- boiler fixing accessories
- technical documentation

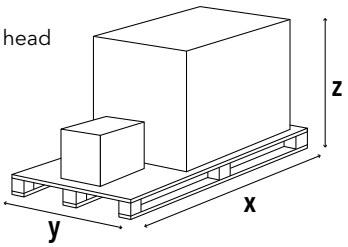

Model	Dimensions (mm)			Gross weight (kg)
	X	Y	Z	
EK EVO 6.2400 L-E	2046	1414	1233	300
EK EVO 6.2900 L-E	2046	1414	1233	300
EK EVO 7.3600 L-E	2046	1414	1233	350
EK EVO 7.4500 L-E	2046	1414	1233	350

EK EVO 8 L-E / EK EVO 9 L-E

1210 … 10620 kW
Two stage progressive/modulating electronic

- **Fuels:** light oil, viscosity 6 mm²/s at 20°C, Hi = 11,86 kWh/kg
- **Emission class:** Low NOx class 2 (≤185 mg/kWh) according to EN267
- **Protection level:** IP 41

TECHNICAL DATA

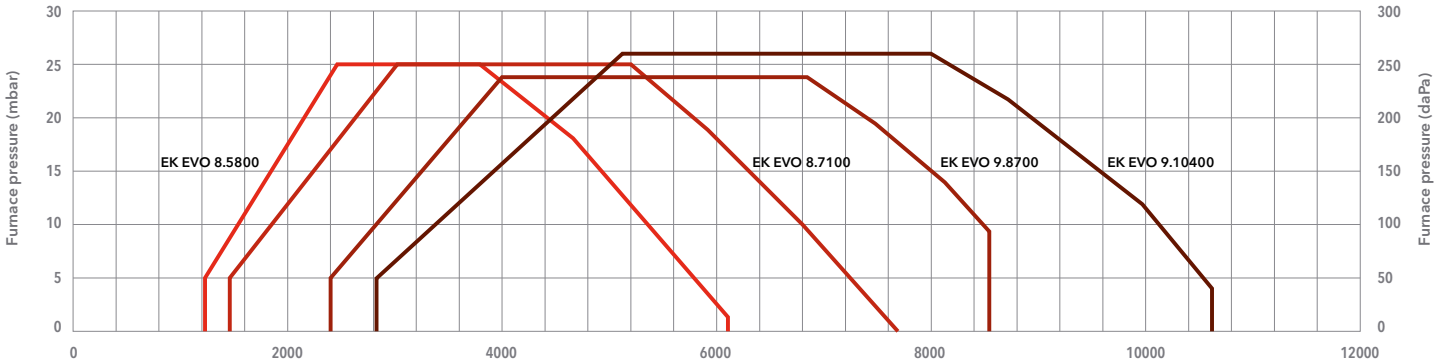

Test conditions conforming to EN267 - Temperature: 20°C - Pressure: 1013,5 mbar - Altitude: 0 m a.s.l.

Power (kW)

		EK EVO 8.5800 L-E	EK EVO 8.7100 L-E	EK EVO 9.8700 L-E	EK EVO 9.10400 L-E
Operating range		1210 – 6100 kW	1450 – 7700 kW	2400 – 8530 kW	2820 – 10620 kW
Fuel connection		DN20 x 1500 mm / R 3/4"	DN20 x 1500 mm / R 3/4"	DN20 x 1500 mm / R 3/4"	DN25 x 1500 mm / R 1"
Auxiliary voltage		1NPE AC 230 V – 50 Hz TN-S	1NPE AC 230 V – 50 Hz TN-S	1NPE AC 230 V – 50 Hz TN-S	1NPE AC 230 V – 50 Hz TN-S
Power supply		3PE AC 400 V – 50 Hz	3PE AC 400 V – 50 Hz	3PE AC 400 V – 50 Hz	3PE AC 400 V – 50 Hz
Control box / flame detector		BT300 / KLC20	BT300 / KLC20	BT300 / KLC20	BT300 / KLC20
Fan motor		50 Hz – 11 kW	50 Hz – 15 kW	50 Hz – 18,5 kW	50 Hz – 22 kW
Pump		SMG1630 – 1700 l/h	SMG1630 – 1700 l/h	SMG1630 – 1700 l/h	SMG1631 – 2200 l/h
Motor pump		50 Hz – 3 kW	50 Hz – 3 kW	50 Hz – 3 kW	50 Hz – 4 kW
Acoustic level		<80,5 dB(A)	<82,6 dB(A)	<85,5 dB(A)	<86,2 dB(A)
CE certificate		0085CL0215	0085CL0215	0085CL0215	0085CL0215
Burner codes (body + head)	**KN**	**3756764**	**3756767**	**3756770**	**3756773**
	KM	**3756763**	**3756766**	**3756769**	**3756772**
	KL	**3756762**	**3756765**	**3756768**	**3756771**

DIMENSIONS (mm)

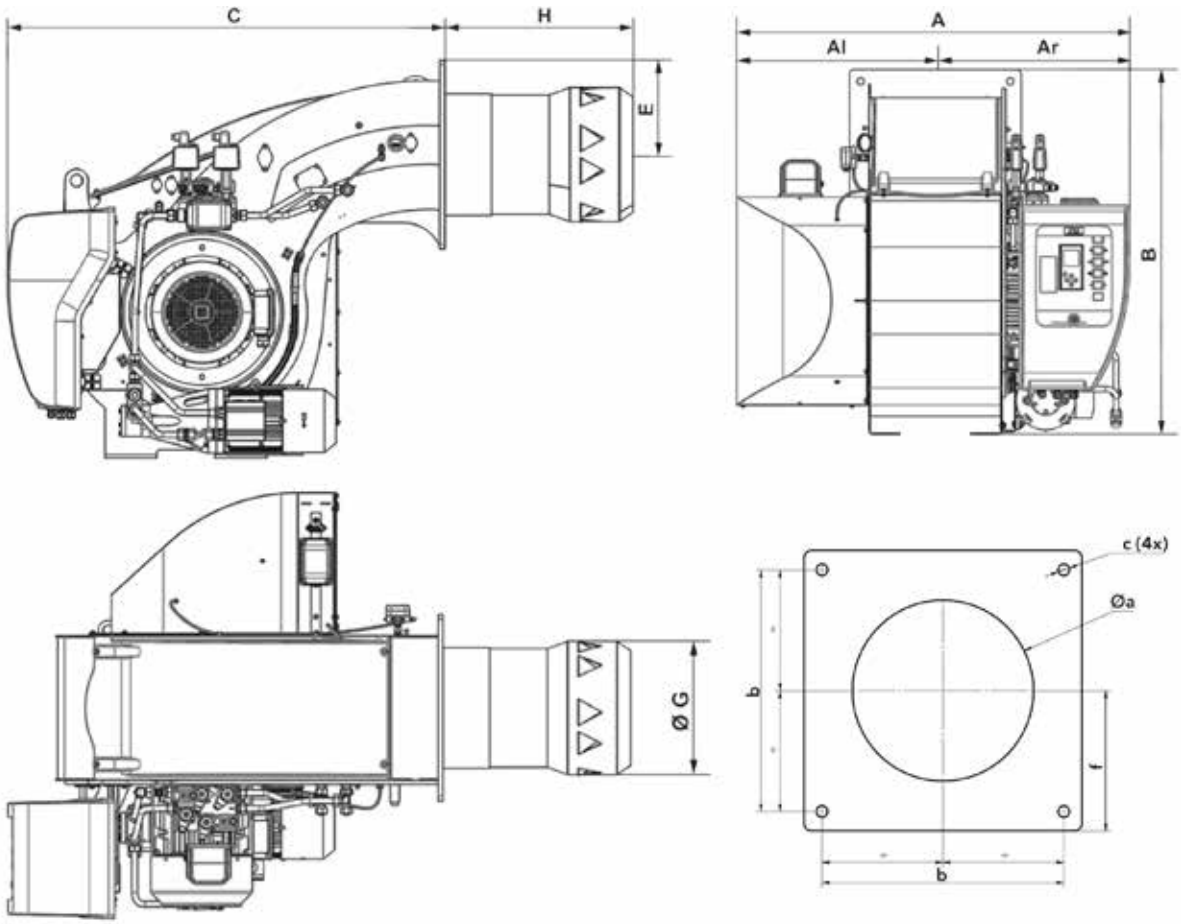

Model	A	Al	Ar	B	C	E	ØG	H			Øa	b	c	f
								KN	KM	KL				
EK EVO 8.5800 L-E	1325	670	655	1231	1351	293	400	562	702	842	430-480	505	M20	293
EK EVO 8.7100 L-E	1325	670	655	1231	1351	293	415	583	723	863	445-480	505	M20	293
EK EVO 9.8700 L-E	1325	670	655	1291	1348	293	431,5	355	505	655	445-480	505	M20	293
EK EVO 9.10400 L-E	1400	670	730	1291	1348	293	431,5	355	505	655	445-480	505	M20	293

PACKAGING

The burner is delivered on a pallet with:
- burner body with mounted combustion head
- boiler fixing accessories
- technical documentation

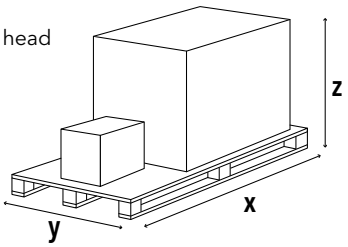

Model	Dimensions (mm)			Gross weight (kg)
	X	Y	Z	
EK EVO 8.5800 L-E	2300	1500	1573	580
EK EVO 8.7100 L-E	2300	1500	1573	580
EK EVO 9.8700 L-E	2300	1500	1573	700
EK EVO 9.10400 L-E	2300	1500	1573	700

LCM MODULE (for communication, O_2 control, frequency converter)

Module mounted in factory, requested for O_2 control, Variatron and communication buses connections (the module is available also on request as a separate kit) Note: only one LCM module is necessary for these 3 options For all dual fuel models the LCM module is already included	**3751645**

MODULATING OPERATION

RS55 (Regulator RWF55 + instruction manual), mounted in factory on the switch cabinet – to be connected to the appropriate probe (see "BURNER KITS" session)	for all models except EK EVO 6/7 GL-EZ3	**3751646**
	for EK EVO 6/7 GL-EZ3	**3751647**

FREQUENCY CONVERTER ARRANGEMENT

Burner prepared to be connected to an external frequency converter; this variant includes the VSM module to control the frequency converter.
NOTE: one LCM module is required and <u>must be ordered separately</u>

EK EVO 6.2400 G-E/G-EF3/G-EU2 prepared for an external frequency converter of **3 kW**	**3751673**
EK EVO 6.2900 G-E/G-EF3/G-EU2 and EK EVO 6.2200 G-EU2N prepared for an external frequency converter of **4 kW**	**3751674**
EK EVO 7.3600 G-E/G-EU2 prepared for an external frequency converter of **5,5 kW**	**3751675**
EK EVO 7.3600 G-EF3, EK EVO 7.4500 G-E/G-EF3/G-EU2, EK EVO 7.3400 G-EU2N and EK EVO 7.4000 G-EFX prepared for an external frequency converter of **7,5 kW**	**3751676**
EK EVO 7.5800 G-EF3 prepared for an external frequency converter of **11 kW**	**3757370**
EK EVO 7.5800 G-EU2 and EK EVO 7.7000 G-EU2/G-EU3 prepared for an external frequency converter of **15 kW**	**3756304**
EK EVO 8.5800 G-E/G-EU3 prepared for an external frequency converter of **11 kW**	**3754025**
EK EVO 8.7100 G-E/G-EU3 and EK EVO 8.6600 G-EFX prepared for an external frequency converter of **15 kW**	**3754026**
EK EVO 9.8700 G-E/G-EU3 prepared for an external frequency converter of **18,5 kW**	**3754027**
EK EVO 9.10400 G-E/G-EU3, EK EVO 9.7200/7500 G-EU2N and EK EVO 9.7200/7400 G-EFX prepared for an external frequency converter of **22 kW**	**3754028**
EK EVO 9.13000 G-EU2/G-EU3 and EK EVO 9.11300 G-EFX prepared for an external frequency converter of **37 kW**	**3756303**
EK EVO 6.2400 GL-... prepared for an external frequency converter of **3 kW**	**3751677**
EK EVO 6.2900 GL-... prepared for an external frequency converter of **4 kW**	**3751678**
EK EVO 7.3600 GL-E/GL-EZ3 prepared for an external frequency converter of **5,5 kW**	**3751679**
EK EVO 7.4500 GL-E/GL-EZ3 and EKEVO 7.3600/4500 GL-EF3 prepared for an external frequency converter of **7,5 kW**	**3751680**
EK EVO 8.5800 GL-E prepared for an external frequency converter of **11 kW**	**3755057**
EK EVO 8.7100 GL-E and EK EVO 8.5700 GL-EF3 prepared for an external frequency converter of **15 kW**	**3755058**
EK EVO 9.8700 GL-E/GL-EUF prepared for an external frequency converter of **18,5 kW**	**3755059**
EK EVO 9.10400 GL-E/GL-EUF and EK EVO 9.6500 GL-EF3 prepared for an external frequency converter of **22 kW**	**3755060**

MAX GAS PRESSURE SWITCH (mounted on the gas train)

EK EVO 6/7	with Siemens threaded gas trains	**3751669**
	with Siemens flanged gas trains	**3751670**
	with Dungs threaded gas trains	**3751671**
	with Dungs flanged gas trains	**3751672**
EK EVO 8/9	with Siemens threaded gas trains	**3754021**
	with Siemens flanged gas trains	**3754022**
	with Dungs threaded gas trains	**3754023**
	with Dungs flanged gas trains	**3754024**

STAR/DELTA MOTOR STARTER

Star/Delta 4,0 G/BT3 for EK EVO 6.2200 G-EU2N and EK EVO 6.2900 G-.../GL-.../L-...	**3751650**
Star/Delta 5,5 G/BT3 for EK EVO 7.3600 G-E, GL-EZ3, GL-E and L-E	**3751651**
Star/Delta 7,5 G/BT3 for EK EVO 7.3400 G-EU2N, EK EVO 7.3600 G-EF3, GL-EF3, L-EF3 and EK EVO 7.4500 G-.../GL-.../L-...	**3751652**

PED EQUIPMENT

Equipment of the gas train and the burner body for continuous operation (PED):
- controller and flame sensor approved for continuous operation,
- maximum gas pressure switch on the gas train,
- test burner (to bleed the gas train),
- PED Conformity Declaration.

Note: if required, the antivibrating coupling (to avoid mechanical tension) has to be selected as option

PED for EK EVO 6/7 G-E	with Siemens threaded gas trains	**3751653**
	with Siemens flanged gas trains	**3751654**
	with Dungs threaded gas trains	**3751655**
	with Dungs flanged gas trains	**3751656**
PED for EK EVO 6/7 G-EF3	with Siemens threaded gas trains	**3751665**
	with Siemens flanged gas trains	**3751666**
	with Dungs threaded gas trains	**3751667**
	with Dungs flanged gas trains	**3751668**
PED for EK EVO 8/9 G-E and EK EVO 8/9 G-EU3 (except for model 9.13000)	with Siemens threaded gas trains	**3754010**
	with Siemens flanged gas trains	**3754011**
	with Dungs threaded gas trains	**3754019**
	with Dungs flanged gas trains	**3754020**
PED for EK EVO 6...9 G-EU2/-EU2N and EK EVO 9.13000 G-EU2/-EU3	with Siemens threaded gas trains	**3756265**
	with Siemens flanged gas trains	**3756264**
	with Dungs threaded gas trains	**3756263**
	with Dungs flanged gas trains	**3756262**
PED for EK EVO 6/7 GL-EZ3 and EK EVO 6/7 GL-E	with Siemens threaded gas trains	**3751657**
	with Siemens flanged gas trains	**3751658**
	with Dungs threaded gas trains	**3751659**
	with Dungs flanged gas trains	**3751660**
PED for EK EVO 8/9 GL-E	with Siemens threaded gas trains	**3755055**
	with Siemens flanged gas trains	**3755056**
	with Dungs threaded gas trains	**3755053**
	with Dungs flanged gas trains	**3755054**
PED for EK EVO 6/7 GL-EF3	with Siemens threaded gas trains	**3755067**
	with Siemens flanged gas trains	**3755068**
	with Dungs threaded gas trains	**3755065**
	with Dungs flanged gas trains	**3755066**
PED for EK EVO 8/9 GL-EF3/GL-EUF	with Siemens threaded gas trains	**3755063**
	with Siemens flanged gas trains	**3755064**
	with Dungs threaded gas trains	**3755061**
	with Dungs flanged gas trains	**3755062**
PED for EK EVO 6...9 L-E		**3757269**
PED for EK EVO 6...9 L-EU3/L-EUF		**3757270**
PED for EK EVO 6...9 G-... equipped with FGR System	with Siemens threaded gas trains	**3756269**
	with Siemens flanged gas trains	**3756268**
	with Dungs threaded gas trains	**3756267**
	with Dungs flanged gas trains	**3756266**

O_2 TRIM FOR BT300, ETAMATIC AND ETAMATIC OEM, FMS/VMS

This kit is used to optimize the combustion in order to keep the air excess as much stable as possible irrespective of the changes that can occur during operations, for instance slight calorific value variations, combustion air temperature and pressure. This improves the seasonal efficiency and therefore reduces the fuel consumption.

The kit includes the following components:
- Lambda transmitter LT3
- Lambda probe LS2
- Probe installation fitting (PIF)
- Gas extraction device (GED)

The control unit has to be installed close to the probe (max 10 m of cable)
The probe needs a calibration but no reference gas is necessary.
The display shows the O_2 content.
Maximum distance between the LT3 and the burner control panel is 500 m.

	Additional LSB modules installed at LT3	GED length	Code
Kit for O_2 trim (LT3 + LS2) **Flue temp max 300 °C – Display for O_2 visualization** (Note: for models equipped with BT3 this kit needs a LCM module installed in the burner control panel)	none	150 mm	**3759296**
		300 mm	**3759297**
		450 mm	**3759298**
	4x 0/4-20 mA output	150 mm	**3759299**
		300 mm	**3759300**
		450 mm	**3759301**
	4x 0/4-20 mA output + 4x digital output	150 mm	**3759302**
		300 mm	**3759303**
		450 mm	**3759304**

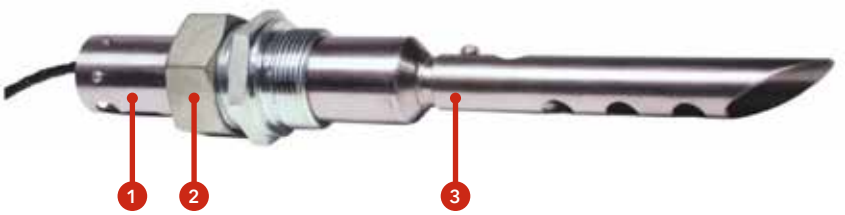

1. Lambda Probe LS2 in standard housing up to 300°C (572°F); default cable length is 2 m (6.5 ft), FEP, with connecting plug
2. Probe installation fitting (PIF)
3. Gas extraction device (GED)

The LS2 lambda probe is equipped with a 2 meter long connection cable that connects the sensor to the transmitter (LT3). It is possible to extend the connection up to a maximum distance of 10 meters (for greater lengths the conformity expires) with a ready-made cable and a probe connection box (PCB).

Description		Code
Extension for LS2	5m ready-made cable	**3759318**
	PCB (probe connection box)*	**3759319**

The PCB is a small terminal box that is connected to the 2 meter long cable already existing on the probe. The wiring between the PCB and the transmitter must be carried out on the construction site with suitable cables and trained personnel.

*: the PCB is mandatory if the end user chooses to use his own connecting cable and not one of those proposed (max total length remains 10m)

O_2/CO_e TRIM FOR BT300, ETAMATIC AND ETAMATIC OEM, FMS/VMS

This kit is used for optimizing the combustion in order to keep the air excess as low as possible in order to maximize the seasonal efficiency and therefore minimize the fuel consumption.
In addition to the features of the O_2 trim only, this kit reduces the air excess to its minimum because this system continuously measures the content of unburned fuel (CO_e) in the flue: should the air excess be reduced too much, the CO_e raises and the system reacts by increasing the air excess in order to keep firing in safe conditions.

The kit includes the following components:
- Lambda transmitter LT3-F
- Lambda probe KS1D
- Probe installation fitting (PIF)
- Gas extraction device (GED)

The control unit has to be installed close to the probe (max 10 m of cable).
The probe needs a calibration but no reference gas is necessary.
The display shows the O_2 and CO_e content.
Maximum distance between the LT3-F and the burner control panel is 500 m.

	Additional LSB modules installed at LT3-F	GED length	Code
Kit for O_2 trim and CO control (LT3-F + KS1D) **Flue temp max 300 °C** (Note: for models equipped with BT3 this kit needs a LCM module installed in the burner control panel)	none	150 mm	**3759305**
		300 mm	**3759306**
		450 mm	**3759307**
	4x 0/4-20 mA output	150 mm	**3759308**
		300 mm	**3759309**
		450 mm	**3759310**
	4x 0/4-20 mA output + 4x digital output	150 mm	**3759311**
		300 mm	**3759312**
		450 mm	**3759313**

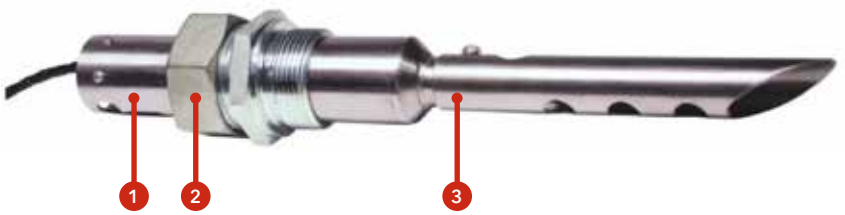

1. Lambda Probe KS1D in standard housing up to 300°C (572°F); default cable length is 2 m (6.5 ft), FEP, with connecting plug
2. Probe installation fitting (PIF)
3. Gas extraction device (GED)

The KS1D lambda probe is equipped with a 2 meter long connection cable that connects the sensor to the transmitter (LT3-F). It is possible to extend the connection up to a maximum distance of 10 meters (for greater lengths the conformity expires) with a ready-made cable and a probe connection box (PCB).

Description		Code
Extension for KS1D	5m ready-made cable	**3759318**
	PCB (probe connection box)*	**3759319**

The PCB is a small terminal box that is connected to the 2 meter long cable already existing on the probe. The wiring between the PCB and the transmitter must be carried out on the construction site with suitable cables and trained personnel.

*: the PCB is mandatory if the end user chooses to use his own connecting cable and not one of those proposed (max total length remains 10m)

REMOTE SOFTWARE

Kit to connect a PC laptop to the BT300 for its parametrization	LSA100 + USB/CAN + CD-Rom	**3751130**

COMMUNICATION MODULES

Modules for external installation Note: LCM module is required	ModBus/BT3 (EBM100)	**3754456**
	ProfiBus/BT3 (PBM100)	**3752986**
	Profinet/BT3 (EBM112)	**3758317**
	Ethernet/BT3	**on request**

POWER REGULATOR

Power regulator RWF55 stand-alone and kit wiring	**3753358**

PROBES

Immersion probes	PT 100: –50°/+400°C (100 mm) + pocket tube (76 mm)	**3750070**
	PT 100: 400°C (160 mm)	**1758574269**
	PT 100: 480°C (250 mm)	**3751009**
Pressure probes	0…1,6 bar	**3752217**
	0…2,5 bar	**1758713722**
	0…6 bar	**1758640660**
	0…10 bar	**1758577280**
	0…16 bar	**1758577291**
	0…25 bar	**3751015**

EXTERNAL AIR INLET CONNECTION KIT

Connection for external air channel for EK EVO 6/7	**3752987**
Connection for external air channel for EK EVO 8/9	**3754031**

MAX GAS PRESSURE SWITCH KIT

Kit for EK EVO 6/7	with Siemens threaded gas trains	**3754457**
	with Siemens flanged gas trains	**3754458**
	with Dungs threaded gas trains	**3754457**
	with Dungs flanged gas trains	**3754458**
Kit for EK EVO 8/9	with Siemens threaded gas trains	**3755095**
	with Siemens flanged gas trains	**3755096**
	with Dungs threaded gas trains	**3755095**
	with Dungs flanged gas trains	**3755096**

HYDRAULIC MANOMETER KIT

Kit for EK EVO 6/7 GL-EZ3	**3754440**
Kit for EK EVO 6/7 GL-E/-EF3 and L-E/-EF3	**3754634**
Kit for EK EVO 8/9 GL-.../L-...	**3754613**

SPECIAL PACKAGING KIT (WOODEN BOX)

Wooden Box for EK EVO 6/7	3755020
Wooden Box for EK EVO 8	3754029
Wooden Box for EK EVO 9	on request

ACOUSTIC SHROUDS

See page 321 for sizes and information

- Equipment according EN746-2
- Permanent ventilation
- 60 Hz versions
- Remote display (BT3)
- Separate switch box / terminal strip version (Etamatic OEM)
- LPG firing
- Hinge flange
- "Burner ON" feedback signal

Other special requests can be submitted to your Sales Reference for feasibility evaluation

NEXTRON

MONOBLOCK BURNERS
FROM 250 TO 11200 kW
GAS, LIGHT OIL AND DUAL FUEL

DESIGN: SMOOTH AND INTEGRAL

The original design of NEXTRON range is the result of a successful integration between burner and ELCO technologies.
NEXTRON burners are able to perfectly integrate themselves in any installation and professionals will appreciate the innovative construction structure that ease maintenance.

HIGH ACOUSTIC COMFORT

The NEXTRON burner range offers a high acoustic comfort thanks to the Low Noise System.
The unique air intake channel is carefully designed to achieve an acoustic level significantly lower than 80 dB(A) up to 10 MW.
This integrated and patented system on all NEXTRON burners is definitely a good replacement of the traditional bulky sound proofing box.

UNIQUE LOW NOx PERFORMANCE

Developed and improved by ELCO R&D department, the Free Flame and the Diamond Head technologies are unique combustion processes; the new Blue Triple Head allows you to reach even lower NOx levels, guaranteeing values below 60 mg/kWh.
These ELCO technologies are capable to reach the NOx levels required by the most severe standards for all types of combustion chambers, whether they are 3-pass or reverse pass boilers.

BUILT-IN AND MODULAR SWITCH CABINET

All the NEXTRON burners feature integrated switch cabinet, the ISC System, with modular concept for control devices and accessories:
- adjusting and safety control box;
- EMC protected power circuit of fan motor;
- display with keyboard in front of the control panel.

The ISC System houses options and accessories, such as the power regulator and the frequency inverter Variatron, and customizes each burner according to the installation needs.

RANGE OVERVIEW

/ **GAS RANGE**
340 / 11200 kW

/ **DUAL FUEL RANGE**
250 / 10620 kW

/ **LIGHT OIL RANGE**
360 / 10620 kW

/ **LOW NOx** / **ULTRA LOW NOx**
up to 10200 kW

MAIN TECHNICAL FEATURES

- Two stage progressive/modulating forced draught burner
- Fuels:
  - natural gas, Hi = 6,99 … 11,39 kWh/Nm^3
  - LPG, Hi = 25,89 kWh/Nm^3
  - light oil, viscosity 6 mm^2/s at 20°C, Hi = 11,86 kWh/kg
- Combustion technology:
  - Low NOx class 4 (≤60 mg/kWh), class 3 (≤80 mg/kWh) and class 2 (≤120 mg/kWh) in gas operation, acccording to EN676
  - Low NOx class 3 (≤120 mg/kWh) and class 2 (≤185 mg/kWh) in light oil operation, according to EN267
- Integrated switch cabinet (ISC System) with modular concept complete for an easy installation with:
  - BT300 control box (MDE2 System and display);
  - fan motor direct start-up;
  - enumarated connection terminals;
  - power regulator (option);
  - speed controller Variatron (option);
  - O_2 control (option);
  - Bus interface (option)
- Innovative design allowing easy access to burner components for fast start-up and reduced maintenance time and space
- Three flame tube lengths available
- Secured burner head adjustments during maintenance (RTC System)
- Unique air intake channel design (patented) to reduce acoustic levels (Low Noise System)
- Closing of the air damper on burner shut-down
- Multiple gas train matching according to the inlet gas pressure
- Gas train factory assembled and tested for tightness and electrical security
- Products are in compliance with EN676 and EN267 European standards and with the following directives:
  - 2014/35/UE Low Voltage Directive
  - 2014/30/UE EMC Directive
  - 2016/426/UE Gas Appliances Regulation
  - 2006/42/EC Machinery Directive
  - 2011/65/EU RoHS2 Directive

PRODUCT LIST

	Gas	Dual fuel	Light oil
N6.2200	●		
N6.2400	● ○	● ○	● ○
N6.2900	● ○	● ○	● ○
N7.3400	●		
N7.3600	● ○	● ○	● ○
N7.4000	●		
N7.4500	● ○	● ○	● ○
N8.5700		●	●
N8.5800	● ○	○	○
N8.6600	●		
N8.7100	● ○	○	○
N9.6500		●	●
N9.7200	●		
N9.7500	●		
N9.8700	● ○	● ○	● ○
N9.9400	●		
N9.10400	● ○	● ○	● ○

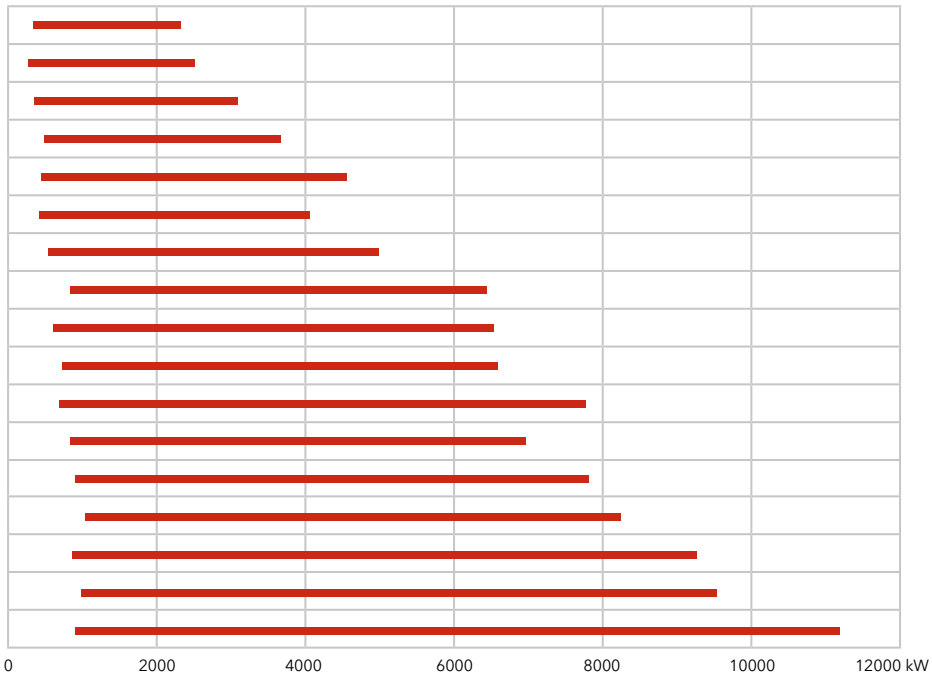

● Class 4 ● Class 3 ○ Class 2

NEXTRON

GAS

ULTRA Low NOx

N7 G-EFX / N8 G-EFX

440 … 6610 kW
Two stage progressive/modulating electronic

NOx <50 mg/kWh

- **Fuels:** natural gas, Hi = 6,99 … 11,39 kWh/Nm³;
  LPG, Hi = 25,89 kWh/Nm³
- **Emission class:** Low NOx class 4 (≤60 mg/kWh) according to EN676
- **Protection level:** IP 41

TECHNICAL DATA

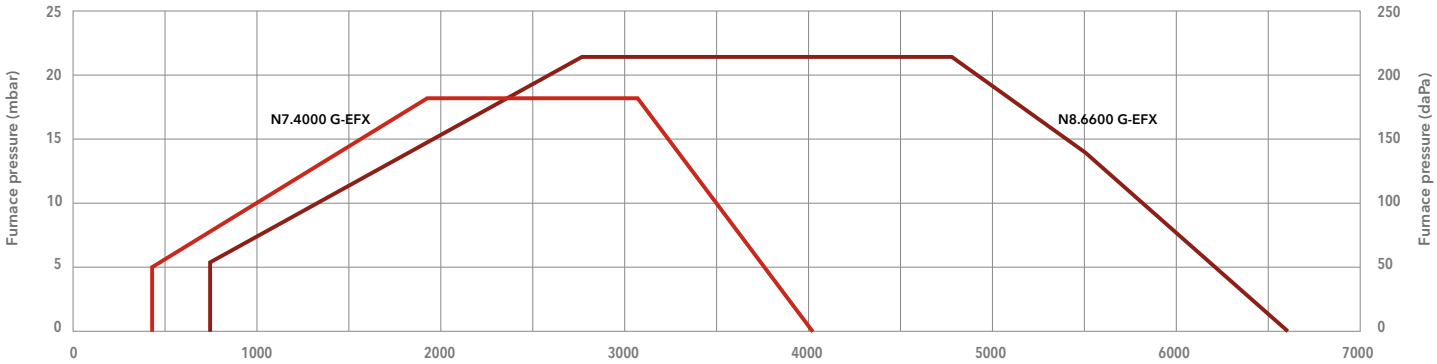

Test conditions conforming to EN676 - Temperature: 20°C - Pressure: 1013,5 mbar - Altitude: 0 m a.s.l.

Power (kW)

		N7.4000 G-EFX	N8.6600 G-EFX
Operating range		440 – 4040 kW	730 – 6610 kW
Gas pressure		100 – 500 mbar (100 – 360 mbar for d705)	135 – 500 mbar
Gas connection		DN65	DN100
Control box / flame detector		BT300 / KLC	BT300 / KLC
Auxiliary voltage		1NPE AC 230 V – 50 Hz TN-S	1NPE AC 230 V – 50 Hz TN-S
Power supply		3PE AC 400 V – 50 Hz	3PE AC 400 V – 50 Hz
Fan motor		50 Hz – 7,5 kW	50 Hz – 15 kW
Acoustic level		<78 dB(A)	<83,7 dB(A)
CE certificate		0085CL0215	0085CL0215
Burner codes (body + head)	KN	on request	on request
	KM	on request	on request
	KL	on request	on request

GAS TRAINS

DUNGS

Models for N7	Code
GT-d705-2" (*)	3759628
GT-d701-65	3759625
GT-d702-80	3759626
GT-d703-100	3759627

Models for N8	Code
GT-d901-65	3759630
GT-d902-80	3759631
GT-d903-100	3759632

*: integrated filter

SIEMENS

Model for N7	Code
GT-s705-2"	3759284
GT-s701-65	3759280
GT-s702-80	3759281
GT-s703-100	3759282
GT-s704-125	3759283

Models for N8	Code
GT-s901-65	3759286
GT-s902-80	3759287
GT-s903-100	3759288
GT-s904-125	3759289

FILTERS

Model	Code
FG-Rp2"	3757200
FG-DN65	3757198
FG-DN80	3757201
FG-DN100	3757195
FG-DN125	3757209

Pressure drops graphs: see following pages
Dimensions of gas trains and gas filters: see page 308

DIMENSIONS (mm)

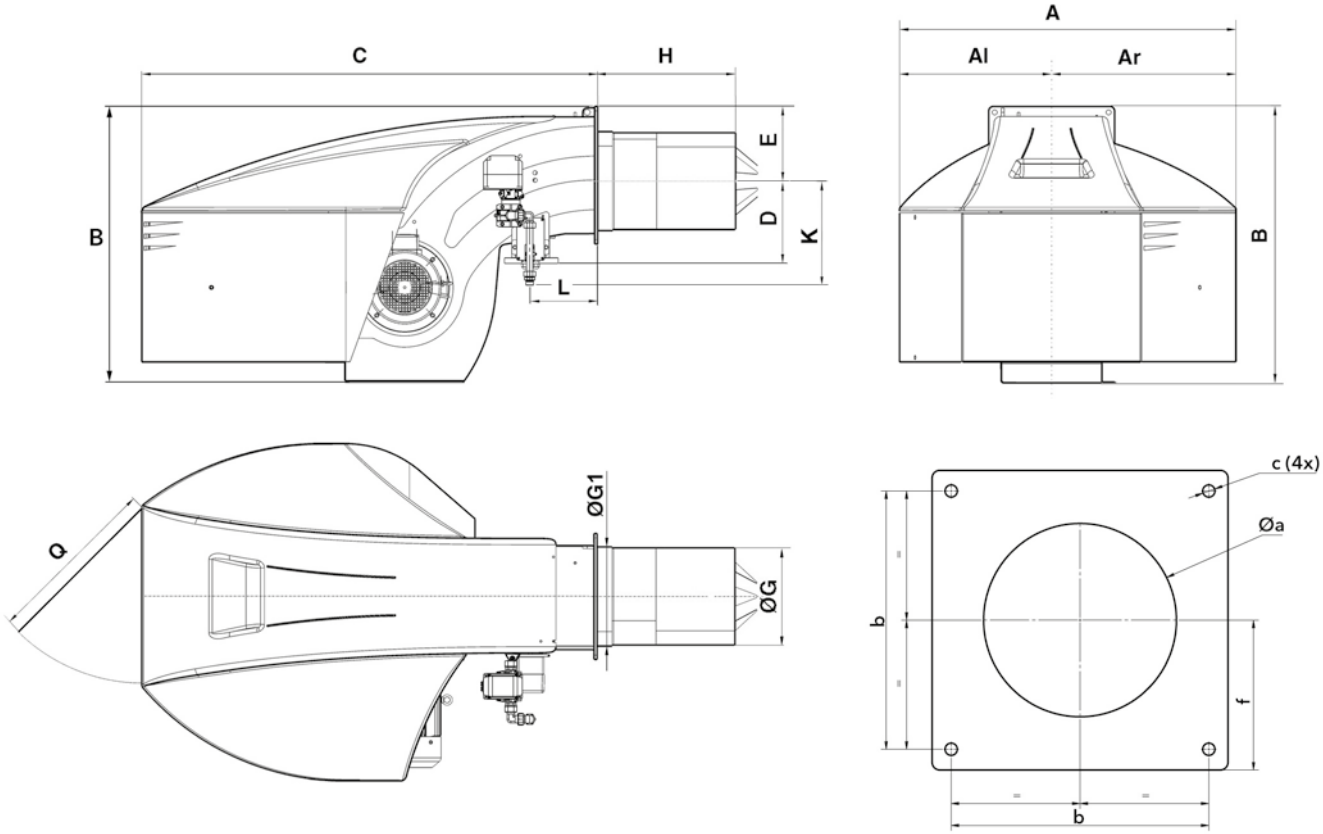

Model	A	Al	Ar	B	C	D	E	ØG	ØG1	H			K	L	Q
										KN	KM	KL			
N7.4000 G-EFX	1128	510	618	961	1529	276	255	325	338	420	550	680	320	233	600
N8.6600 G-EFX	1414	669	745	1231	1930	391	293	369	376	575	725	875	377*/366**	230	800

Øa	b	c	f
360-400	400	M16	235
380-410	505	M20	293

*: applies to gas connectors DN100/65 and DN100/85
**: applies to gas connectors DN100/100 and DN100/125

PACKAGING

The burner is delivered on a pallet with:
- burner body with mounted combustion head
- gas train and filter
- boiler fixing accessories
- technical documentation

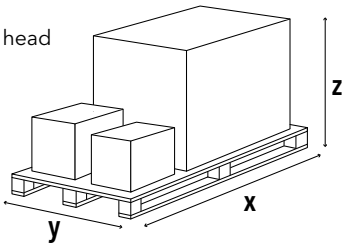

Model	Dimensions (mm)			Gross weight (kg)
	X	Y	Z	
N7.4000 G-EFX	2300	1600	1573	450
N8.6600 G-EFX	2300	1600	1573	700

N6 G-EFX / N7 G-EFX

440 … 6610 kW
Two stage progressive/modulating electronic

PRESSURE LOSS [BURNER HEAD + GAS TRAIN] (mbar)

N7.4000 G-EFX

DUNGS

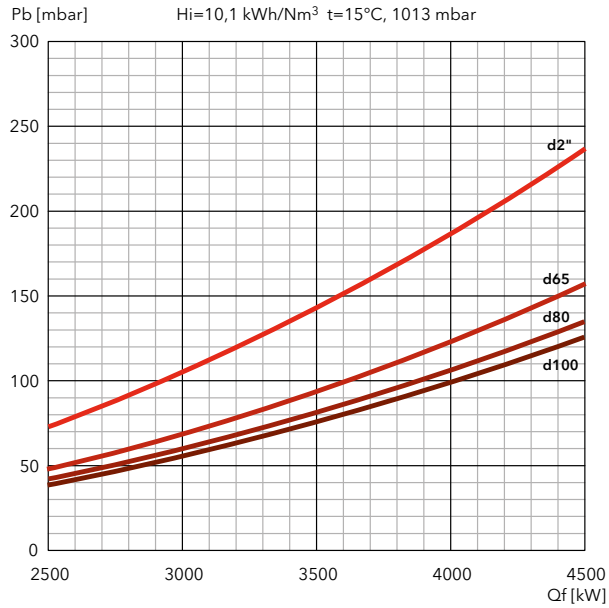

SIEMENS

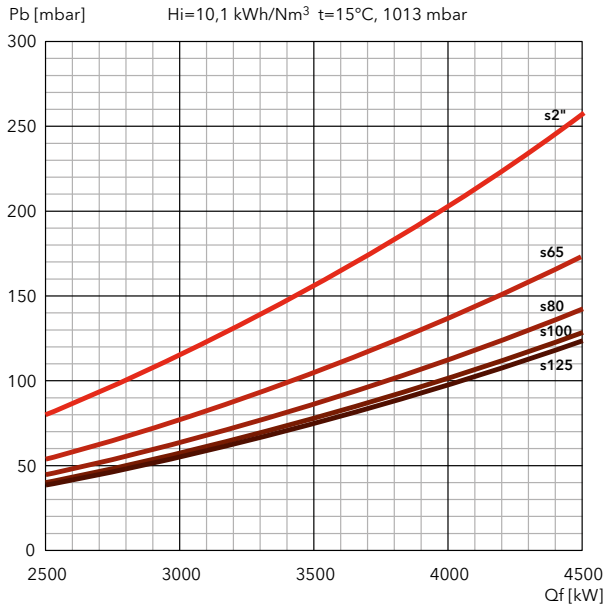

FILTERS

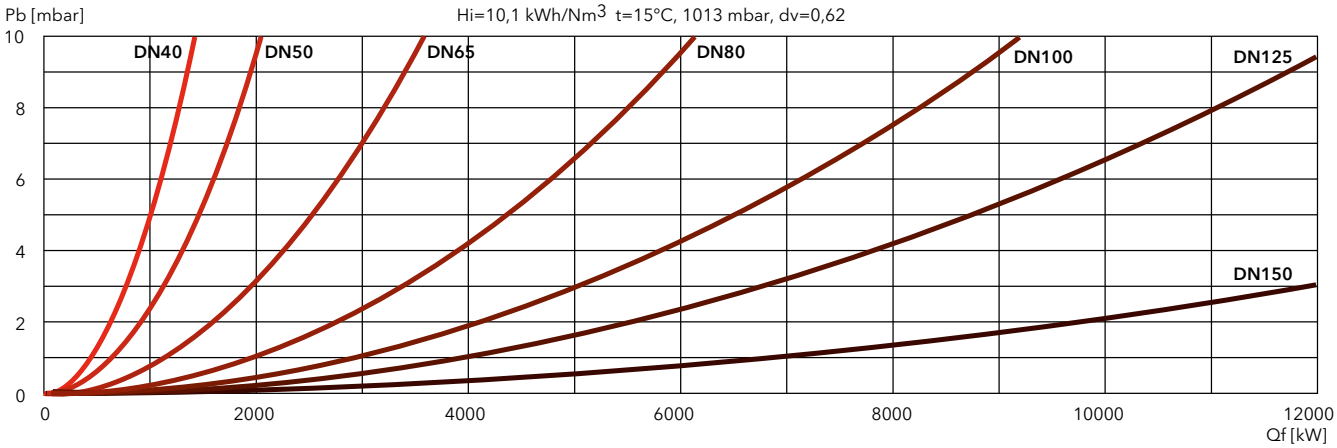

PRESSURE LOSS [BURNER HEAD + GAS TRAIN] (mbar)

N8.6600 G-EFX

DUNGS

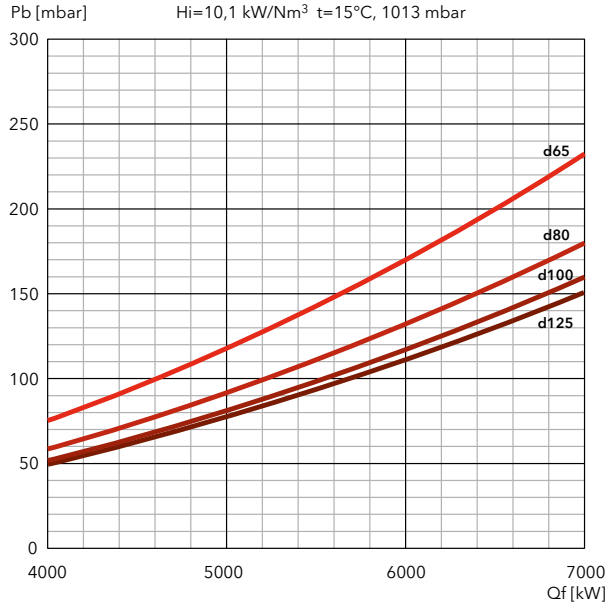

SIEMENS

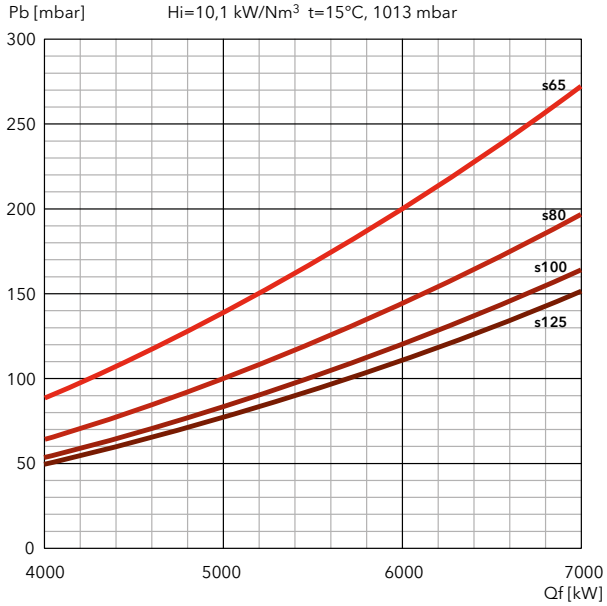

FILTERS

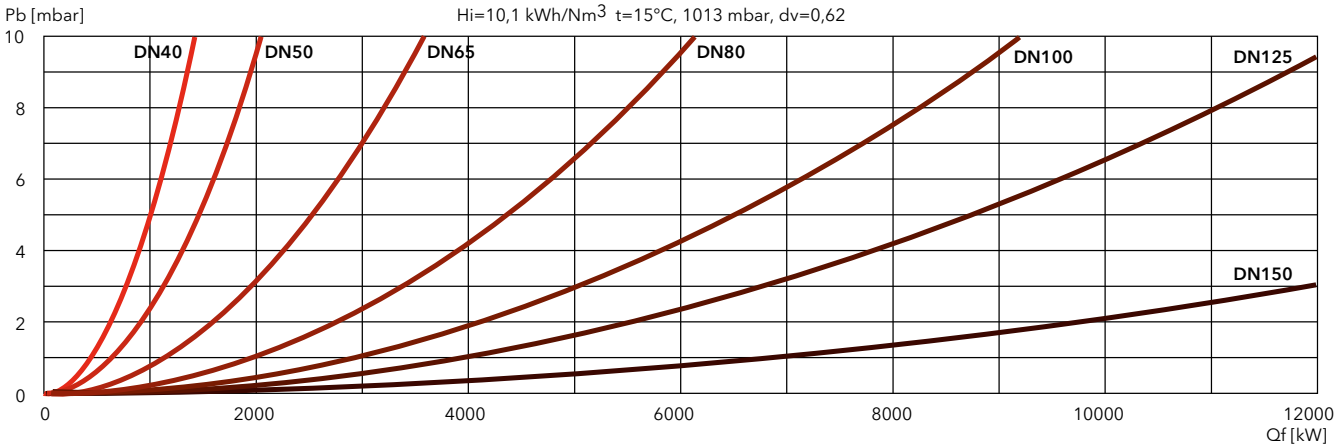

NEXTRON

GAS

ULTRA Low NOx

N9 G-EFX

890 … 9940 kW
Two stage progressive/modulating electronic

NOx <50 mg/kWh

- **Fuels:** natural gas, Hi = 6,99 … 11,39 kWh/Nm³;
  LPG, Hi = 25,89 kWh/Nm³
- **Emission class:** Low NOx class 4 (≤60 mg/kWh) according to EN676
- **Protection level:** IP 41

TECHNICAL DATA

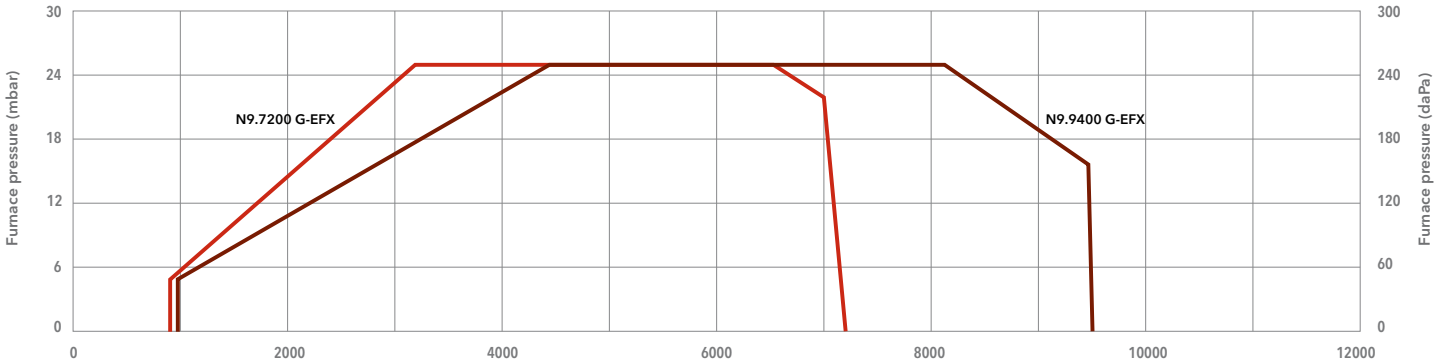

Test conditions conforming to EN676 - Temperature: 20°C - Pressure: 1013,5 mbar - Altitude: 0 m a.s.l.

Power (kW)

		N9.7200 G-EFX	N9.9400 G-EFX
Operating range		890 – 7200 kW	980 – 9440 kW
Gas pressure		150 – 500 mbar	175 – 500 mbar
Gas connection		DN100	DN100
Control box / flame detector		BT300 / KLC	BT300 / KLC
Auxiliary voltage		1NPE AC 230 V – 50 Hz TN-S	1NPE AC 230 V – 50 Hz TN-S
Power supply		3PE AC 400 V – 50 Hz	3PE AC 400 V – 50 Hz
Fan motor		50 Hz – 22 kW	50 Hz – 22 kW
Acoustic level		<79,5 dB(A)	<82,3 dB(A)
CE certificate		0085CL0215	0085CL0215
Burner codes (body + head)	KN	on request	on request
	KM	on request	on request
	KL	on request	on request

GAS TRAINS

DUNGS

Model	Code
GT-d901-65	3759630
GT-d902-80	3759631
GT-d903-100	3759632

SIEMENS

Model	Code
GT-s901-65	3759286
GT-s902-80	3759287
GT-s903-100	3759288
GT-s904-125	3759289

FILTERS

Model	Code
FG-DN65	3757198
FG-DN80	3757201
FG-DN100	3757195
FG-DN125	3757209

i **Pressure drops graphs**: see following pages
Dimensions of gas trains and gas filters: see page 309

DIMENSIONS (mm)

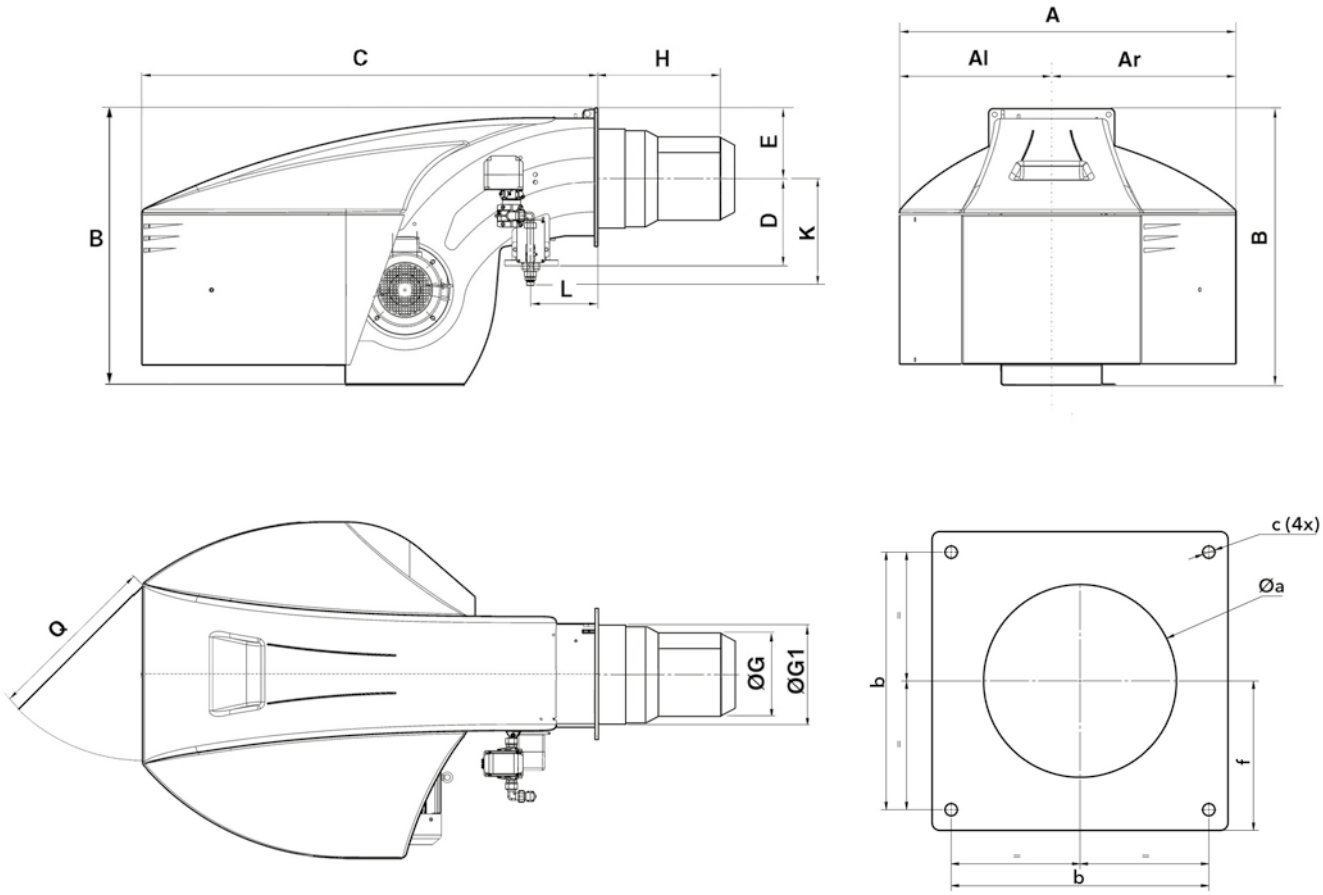

Model	A	Al	Ar	B	C	D	E	ØG	ØG1	H			L	Q	Øa	b	c	f
										KN	KM	KL						
N9.7200 G-EFX	1414	669	745	1291	1928	416	293	385	438,5	649	799	949	230	800	460-480	505	M20	293
N9.9400 G-EFX	1414	669	745	1291	1928	416	293	395	438,5	629	779	929	230	800	460-480	505	M20	293

PACKAGING

The burner is delivered on a pallet with:
- burner body with mounted combustion head
- gas train and filter
- boiler fixing accessories
- technical documentation

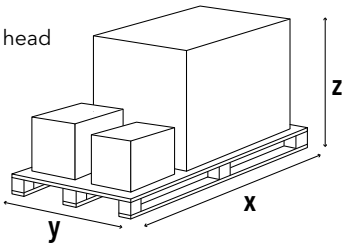

Model	Dimensions (mm)			Gross weight (kg)
	X	Y	Z	
N9.7200 G-EFX	2900	1600	1573	760
N9.9400 G-EFX	2900	1600	1573	760

N9 G-EFX

890 ... 9940 kW
Two stage progressive/modulating electronic

PRESSURE LOSS [BURNER HEAD + GAS TRAIN] (mbar)

N9.7200 G-EFX

DUNGS

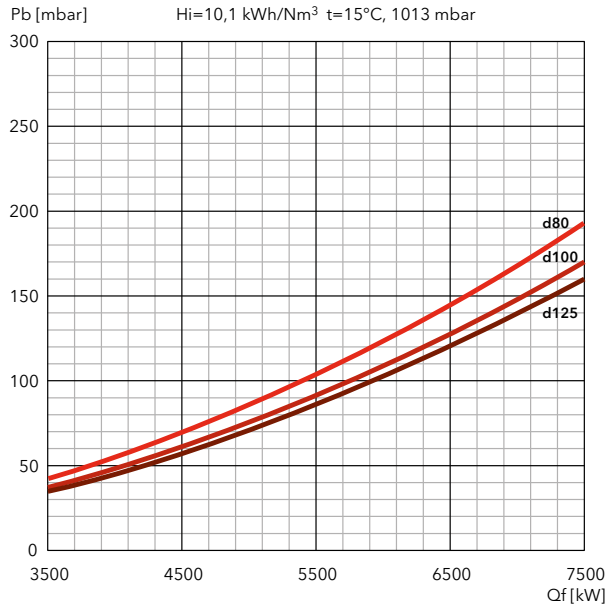

SIEMENS

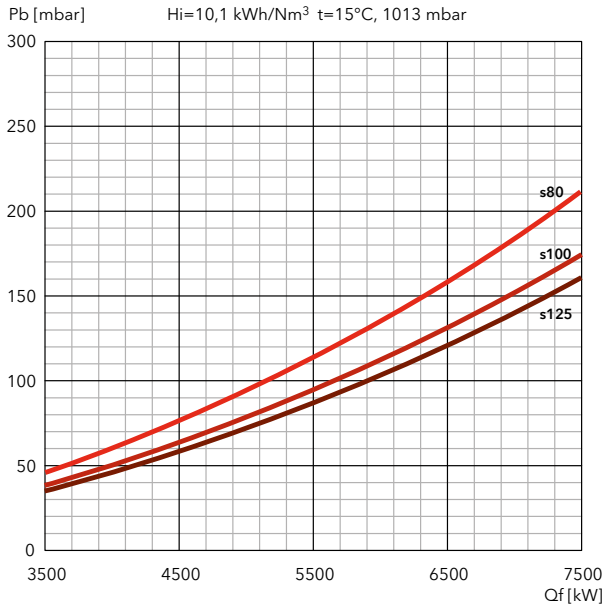

FILTERS

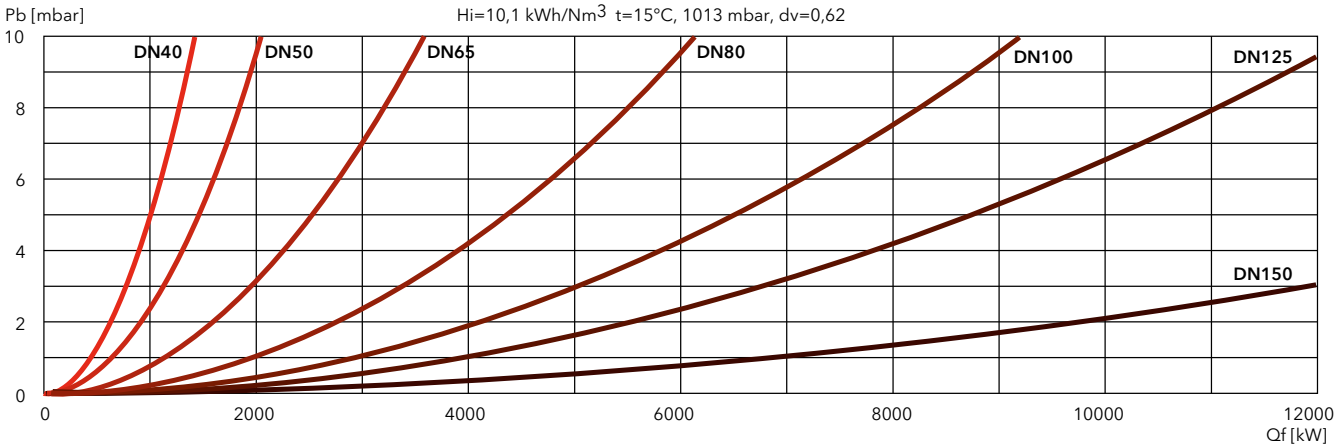

PRESSURE LOSS [BURNER HEAD + GAS TRAIN] (mbar)

N9.9400 G-EFX

DUNGS

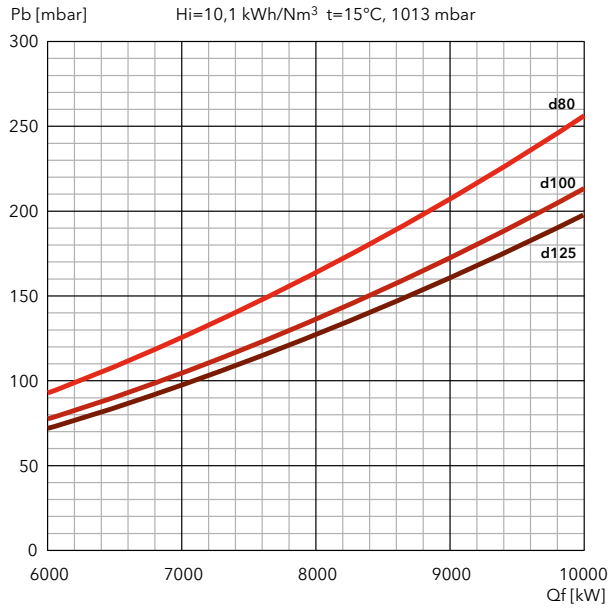

SIEMENS

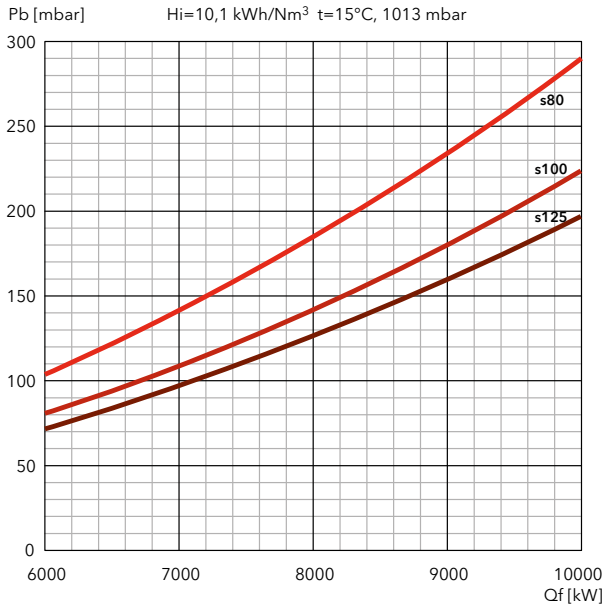

FILTERS

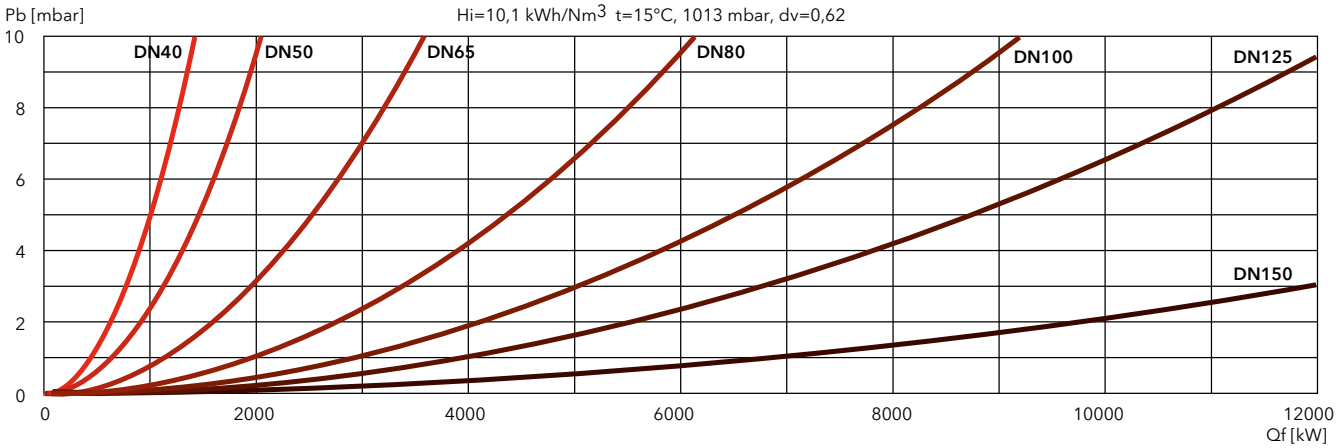

NEXTRON

GAS

Low NOx Class 3

N6 G-EF3 / N7 G-EF3

340 … 4200 kW
Two stage progressive/modulating electronic

- **Fuels:** natural gas, Hi = 6,99 … 11,39 kWh/Nm³;
  LPG, Hi = 25,89 kWh/Nm³
- **Emission class:** Low NOx class 3 (≤80 mg/kWh) according to EN676
- **Protection level:** IP 41

TECHNICAL DATA

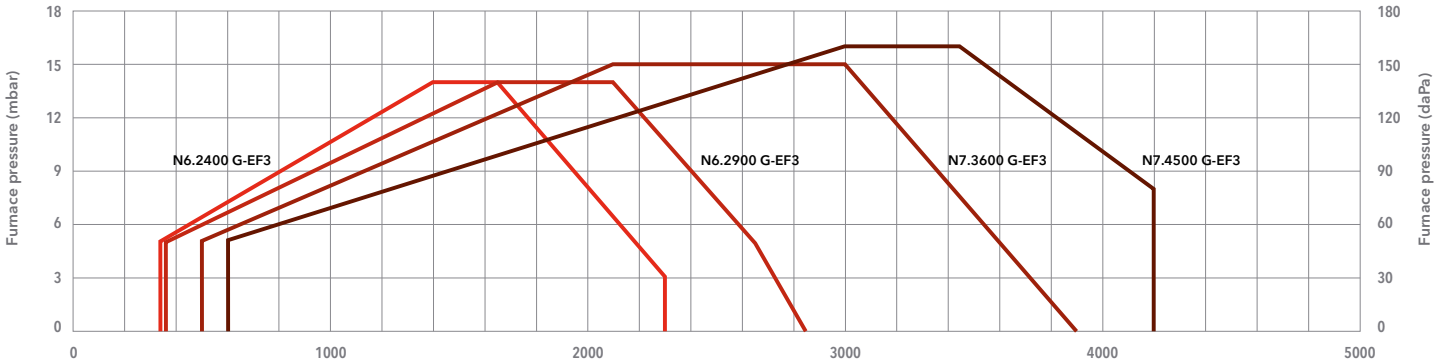

Test conditions conforming to EN676 - Temperature: 20°C - Pressure: 1013,5 mbar - Altitude: 0 m a.s.l.

Power (kW)

	N6.2400 G-EF3	N6.2900 G-EF3	N7.3600 G-EF3	N7.4500 G-EF3
Operating range	340 – 2300 kW	360 – 2850 kW	500 – 3900 kW	600 – 4200 kW
Gas pressure	50 – 500 mbar (50 – 360 mbar for d452 and d453 gas train)		50 – 500 mbar (50 – 360 mbar for d452 and d453 gas train)	
Gas connection	DN65	DN65	DN65	DN65
Control box / flame detector	BT300 / QRA2	BT300 / QRA2	BT300 / QRA2	BT300 / QRA2
Auxiliary voltage	1NPE AC 230 V – 50 Hz TN-S	1NPE AC 230 V – 50 Hz TN-S	1NPE AC 230 V – 50 Hz TN-S	1NPE AC 230 V – 50 Hz TN-S
Power supply	3PE AC 400 V – 50 Hz	3PE AC 400 V – 50 Hz	3PE AC 400 V – 50 Hz	3PE AC 400 V – 50 Hz
Fan motor	50 Hz – 3 kW	50 Hz – 4 kW	50 Hz – 7,5 kW	50 Hz – 7,5 kW
Acoustic level	<70 dB(A)	<71 dB(A)	<74 dB(A)	<75 dB(A)
CE certificate	0085CL0215	0085CL0215	0085CL0215	0085CL0215
Complete burner codes	**on request**	**on request**	**on request**	**on request**

GAS TRAINS

DUNGS

Model	Code
GT-d452-1"1/2 (*)	3750510
GT-d453-2" (*)	3750511
GT-d454-65	3750512
GT-d455-80	3750513
GT-d456-100	3750514

*: integrated filter

SIEMENS

Model	Code
GT-s451-1"1/2	3750525
GT-s452-2"	3750526
GT-s453-65	3750527
GT-s454-80	3750528
GT-s455-100	3750529
GT-s456-125	3750530

FILTERS

Model	Code
FG-Rp1"1/2	3757199
FG-Rp2"	3757200
FG-DN65	3757198
FG-DN80	3757201
FG-DN100	3757195
FG-DN125	3757209

Pressure drops graphs: see following pages
Dimensions of gas trains and gas filters: see page 310

DIMENSIONS (mm)

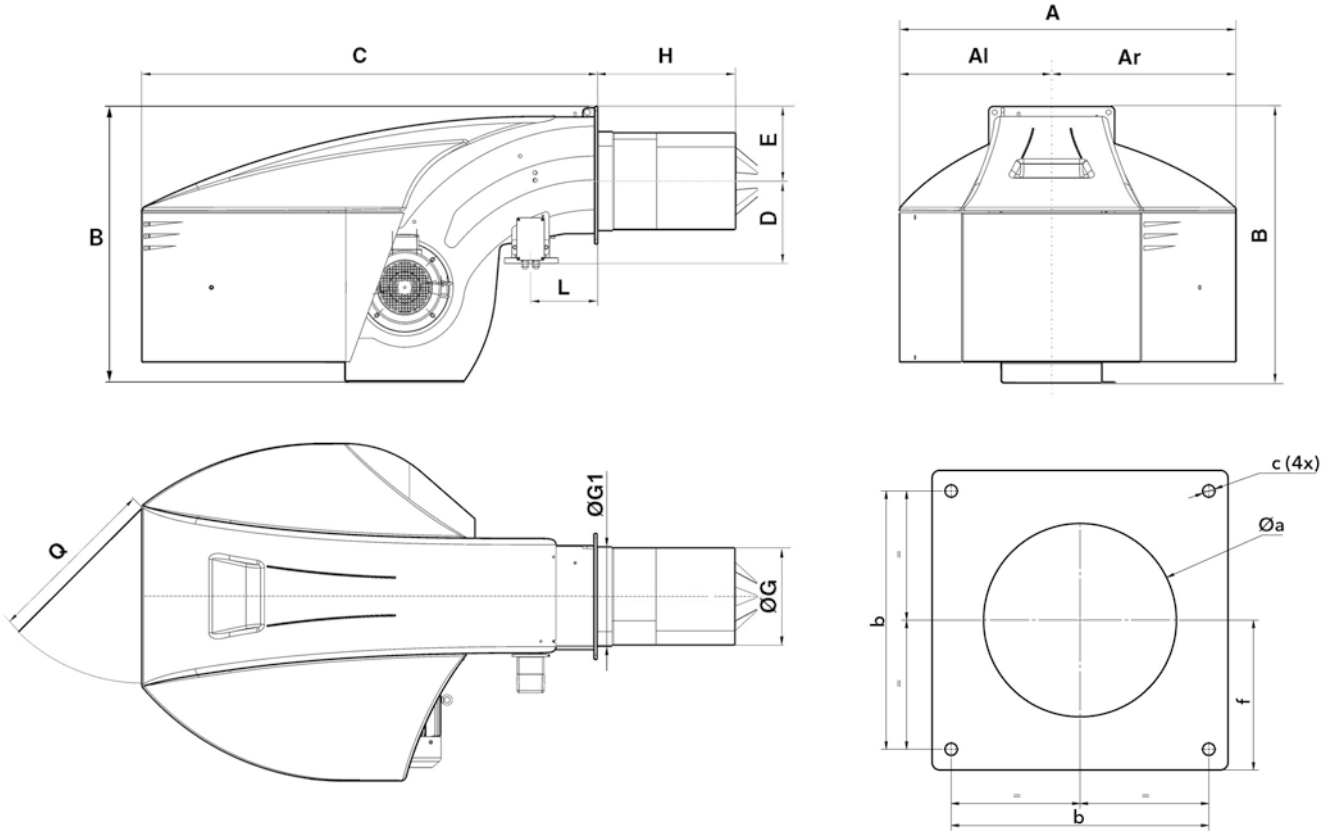

Model	A	Al	Ar	B	C	D	E	ØG	ØG1	H			L	Q
										KN	KM	KL		
N6... G-EF3	989	479	510	837	1361	245	225	263	270	400	520	640	215	600
N7... G-EF3	1128	511	618	961	1529	276	255	325	332	420	550	680	225	600

Øa	b	c	f
330-340	340	M16	200
380-400	400	M16	235

PACKAGING

The burner is delivered on a pallet with:
- burner body with mounted combustion head
- gas train and filter
- boiler fixing accessories
- technical documentation

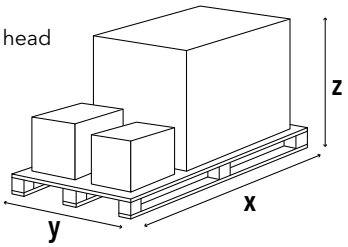

Model	Dimensions (mm)			Gross weight (kg)
	X	Y	Z	
N6.2400 G-EF3	2300	1500	1573	360
N6.2900 G-EF3	2300	1500	1573	360
N7.3600 G-EF3	2300	1500	1573	450
N7.4500 G-EF3	2300	1500	1573	450

N6 G-EF3 / N7 G-EF3

340 ... 4200 kW
Two stage progressive/modulating electronic

PRESSURE LOSS [BURNER HEAD + GAS TRAIN] (mbar)

N6.2400 G-EF3

DUNGS

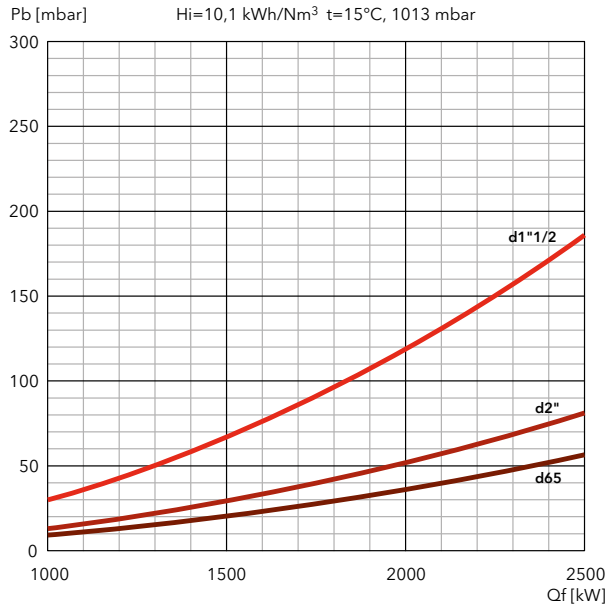

SIEMENS

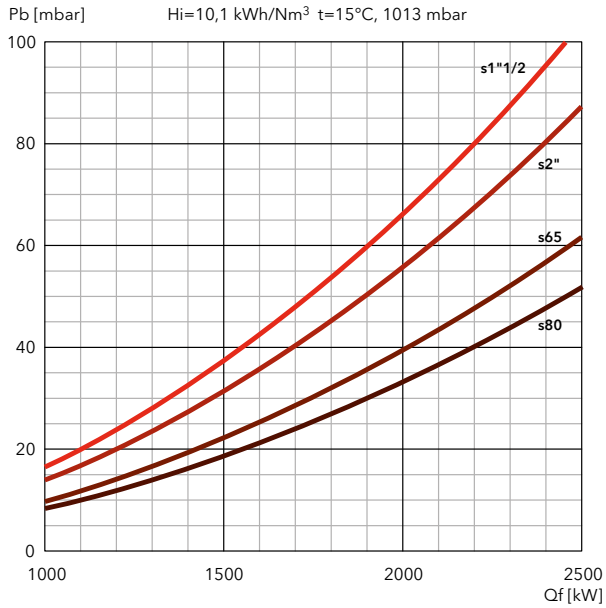

N6.2900 G-EF3

DUNGS

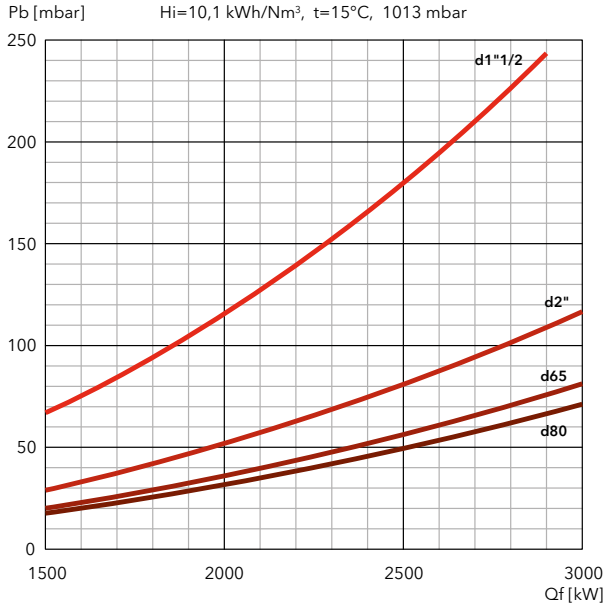

SIEMENS

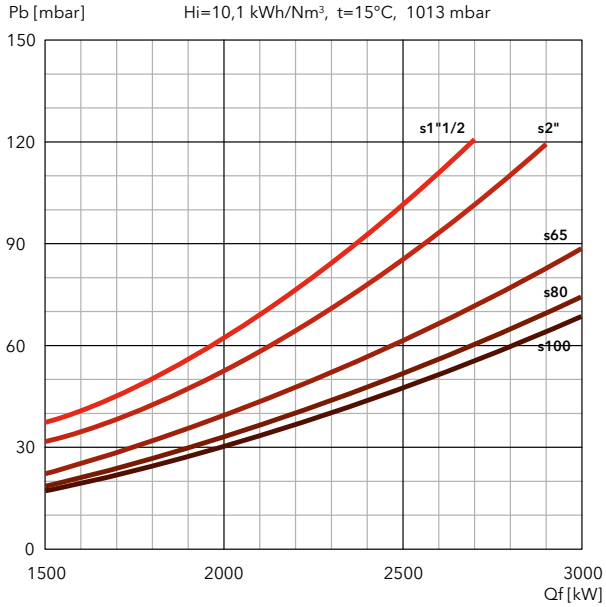

FILTERS

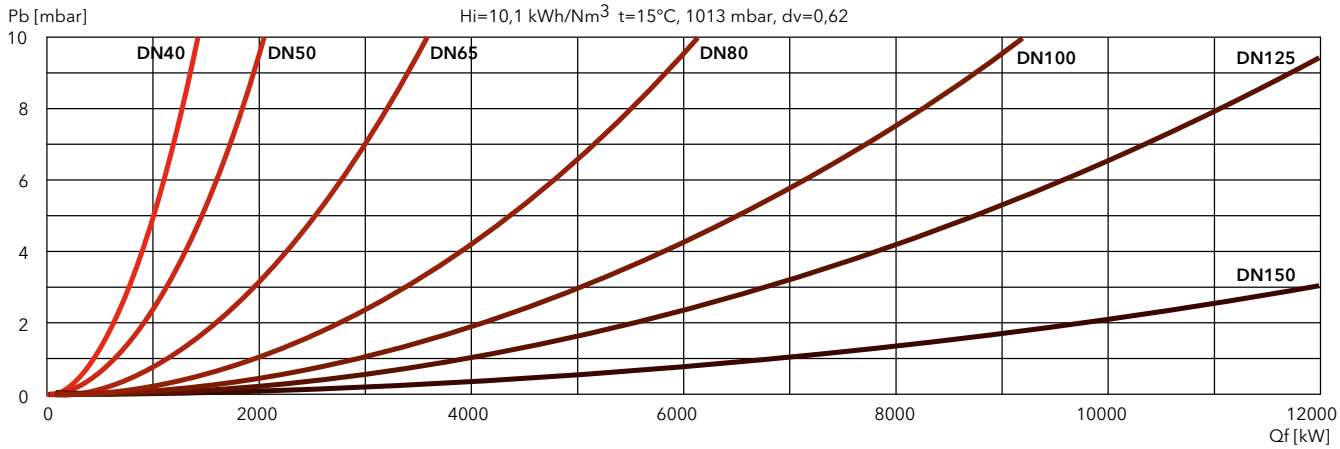

PRESSURE LOSS [BURNER HEAD + GAS TRAIN] (mbar)

N7.3600 G-EF3

DUNGS

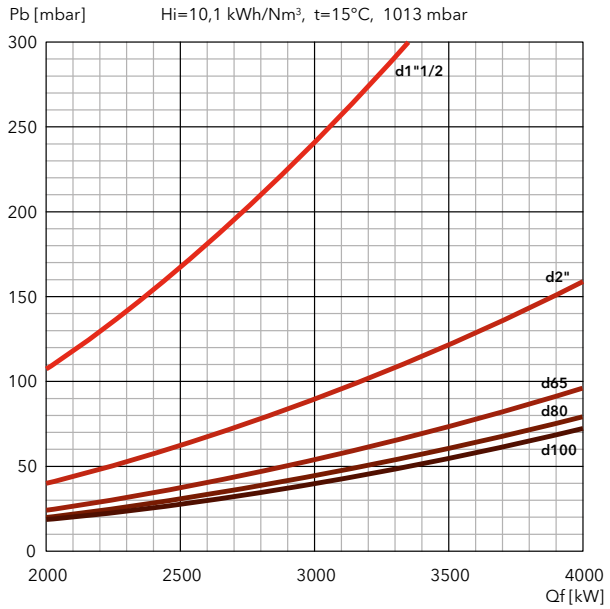

SIEMENS

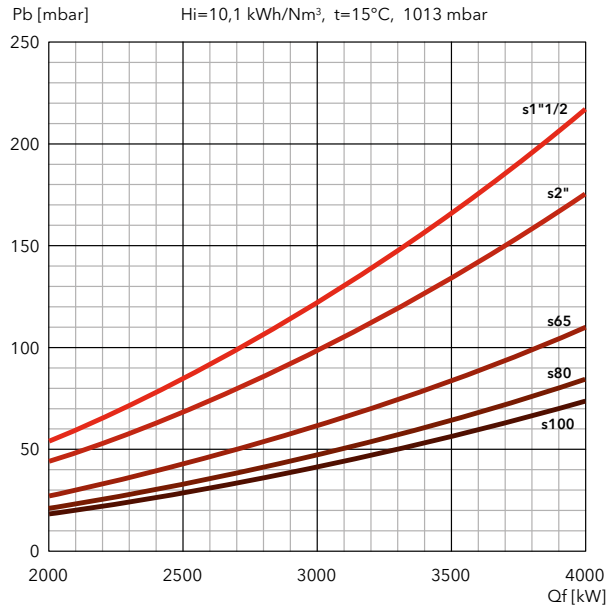

N7.4500 G-EF3

DUNGS

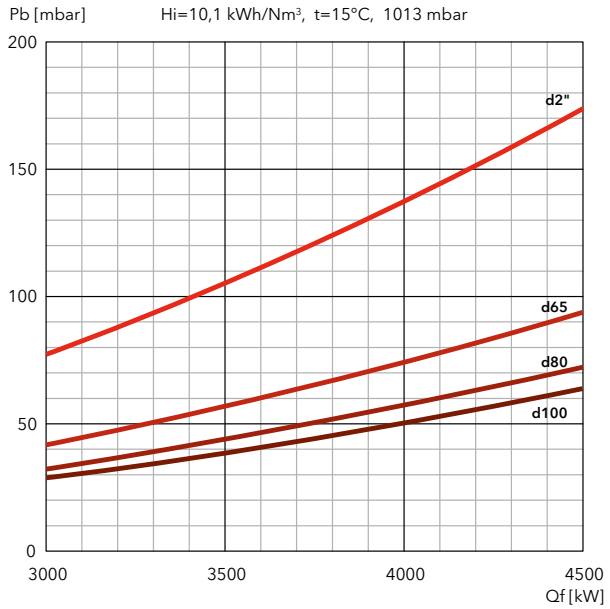

SIEMENS

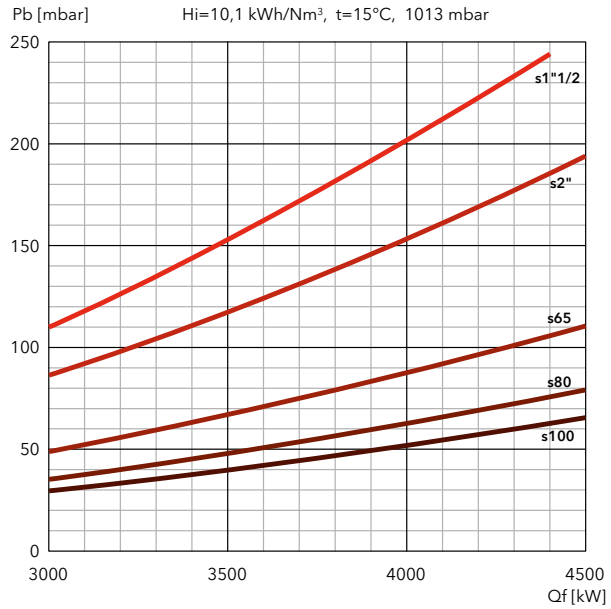

FILTERS

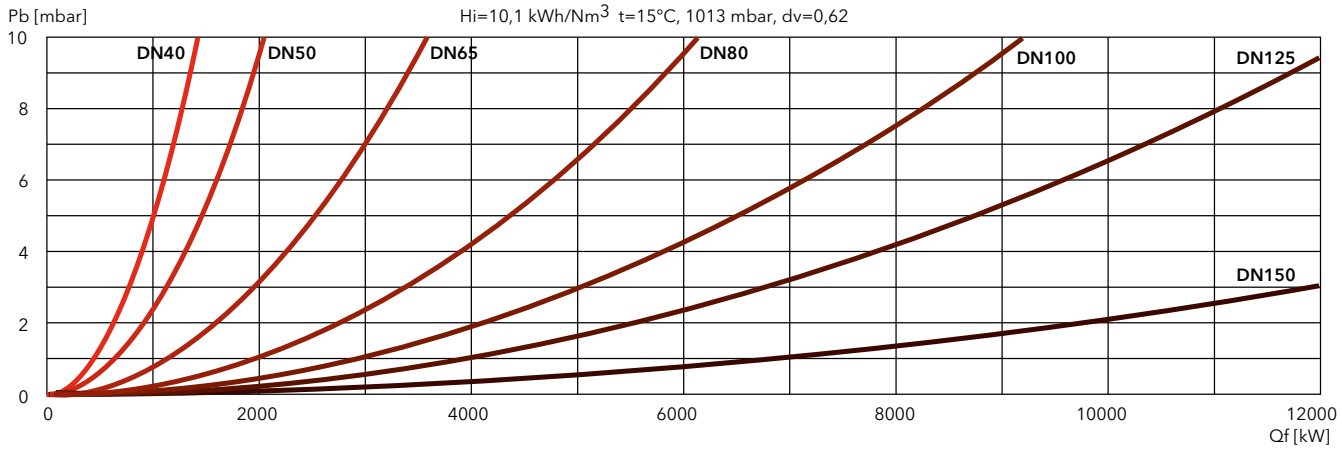

NEXTRON

GAS

Low NOx Class 3

N8 G-EU3 / N9 G-EU3

640 … 10200 kW
Two stage progressive/modulating electronic

- **Fuels:** natural gas, Hi = 6,99 … 11,39 kWh/Nm³;
  LPG, Hi = 25,89 kWh/Nm³
- **Emission class:** Low NOx class 3 (≤80 mg/kWh) according to EN676
- **Protection level:** IP 41

TECHNICAL DATA

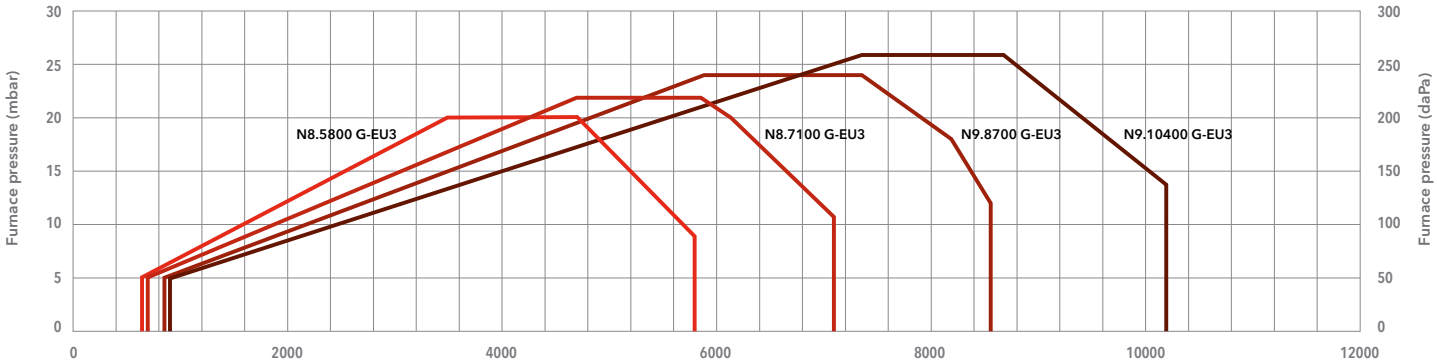

Test conditions conforming to EN676 - Temperature: 20°C - Pressure: 1013,5 mbar - Altitude: 0 m a.s.l.

Power (kW)

	N8.5800 G-EU3	N8.7100 G-EU3	N9.8700 G-EU3	N9.10400 G-EU3
Operating range	640 – 5800 kW	700 – 7100 kW	850 – 8530 kW	900 – 10200 kW
Gas pressure	70 – 500 mbar (70 – 360 mbar for d457 gas train)		80 – 500 mbar (80 – 360 mbar for d457 gas train)	
Gas connection	DN100	DN100	DN100	DN100
Control box / flame detector	BT300 / Ionisation	BT300 / Ionisation	BT300 / Ionisation	BT300 / Ionisation
Auxiliary voltage	1NPE AC 230 V – 50 Hz TN-S	1NPE AC 230 V – 50 Hz TN-S	1NPE AC 230 V – 50 Hz TN-S	1NPE AC 230 V – 50 Hz TN-S
Power supply	3PE AC 400 V – 50 Hz	3PE AC 400 V – 50 Hz	3PE AC 400 V – 50 Hz	3PE AC 400 V – 50 Hz
Fan motor	50 Hz – 11 kW	50 Hz – 15 kW	50 Hz – 18,5 kW	50 Hz – 22 kW
Acoustic level	<78 dB(A)	<78 dB(A)	<80 dB(A)	<81 dB(A)
CE certificate	0085CL0215	0085CL0215	0085CL0215	0085CL0215
Complete burner codes	**on request**	**on request**	**on request**	**on request**

GAS TRAINS

DUNGS

Model	Code
GT-d457-2" (*)	3750515
GT-d458-65	3750516
GT-d459-80	3750517
GT-d460-100	3750518

*: integrated filter

SIEMENS

Model	Code
GT-s457-2"	3750537
GT-s458-65	3750538
GT-s459-80	3750539
GT-s460-100	3750540
GT-s461-125	3750541

FILTERS

Model	Code
FG-Rp2"	3757200
FG-DN65	3757198
FG-DN80	3757201
FG-DN100	3757195
FG-DN125	3757209

i **Pressure drops graphs**: see following pages
Dimensions of gas trains and gas filters: see page 311

DIMENSIONS (mm)

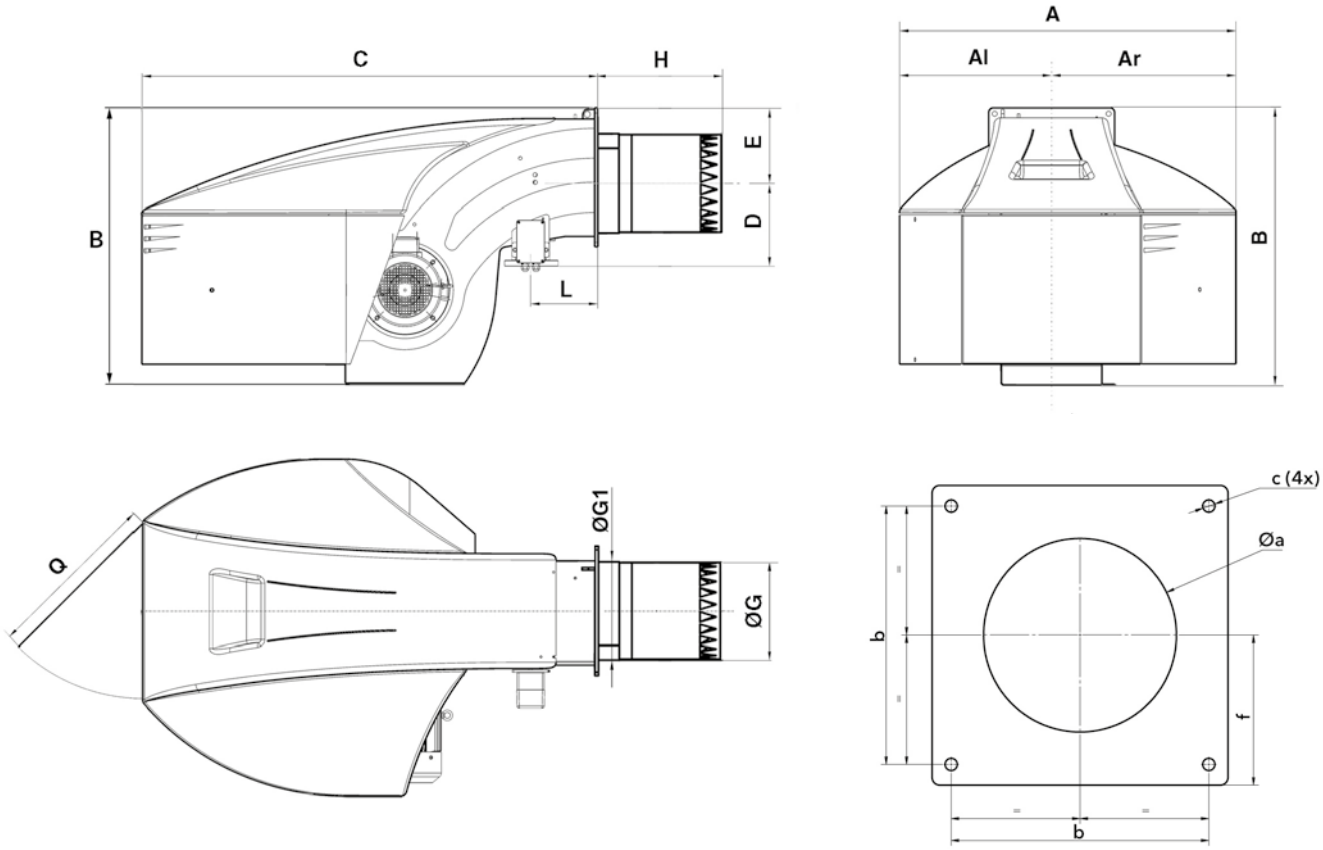

Model	A	Al	Ar	B	C	D	E	ØG	ØG1	H			L	Q
										KN	KM	KL		
N8... G-EU3	1414	669	745	1231	1930	344	293	369	377	500	640	780	230	800
N9... G-EU3	1414	669	745	1291	1930	372	293	431,5	439,5	550	700	850	230	800

Øa	b	c	f
390-410	505	M20	293
460-480	505	M20	293

PACKAGING

The burner is delivered on a pallet with:
- burner body with mounted combustion head
- gas train and filter
- boiler fixing accessories
- technical documentation

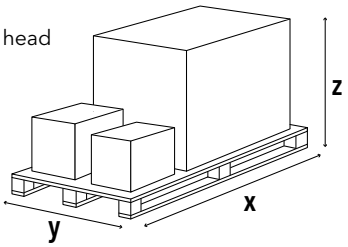

Model	Dimensions (mm)			Gross weight (kg)
	X	Y	Z	
N8.5800 G-EU3	2900	1600	1573	700
N8.7100 G-EU3	2900	1600	1573	700
N9.8700 G-EU3	2900	1600	1573	760
N9.10400 G-EU3	2900	1600	1573	760

N8 G-EU3 / N9 G-EU3

640 ... 10200 kW
Two stage progressive/modulating electronic

PRESSURE LOSS [BURNER HEAD + GAS TRAIN] (mbar)

N8.5800 G-EU3

DUNGS

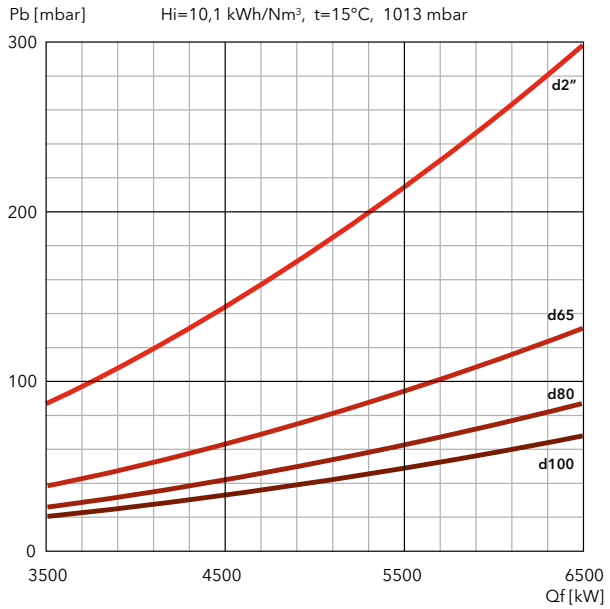

SIEMENS

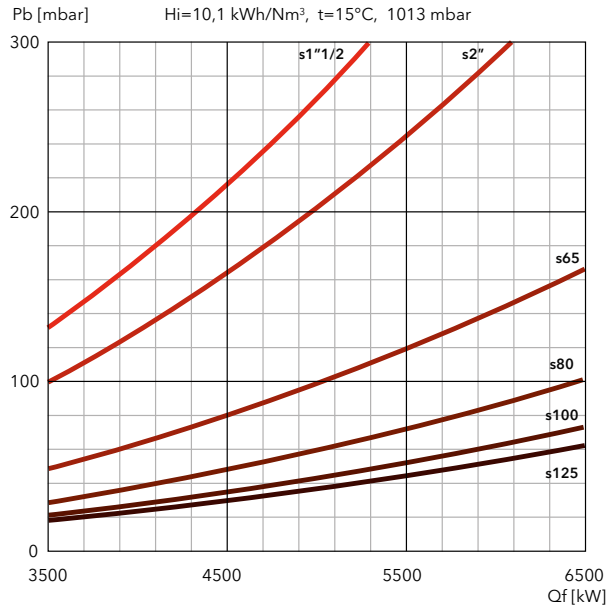

N8.7100 G-EU3

DUNGS

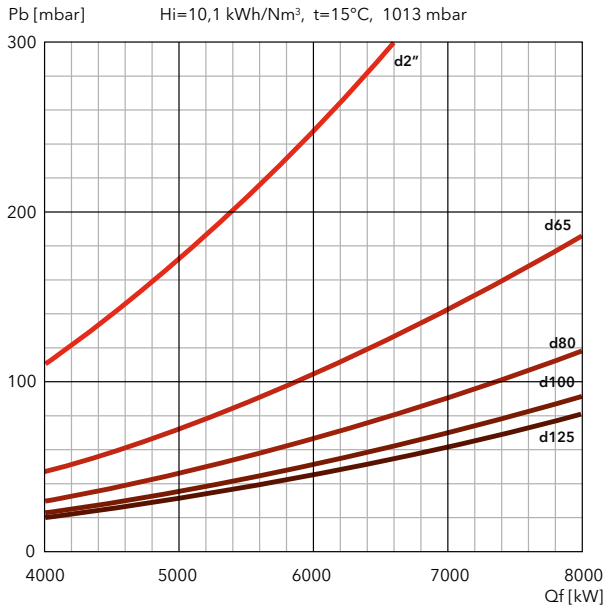

SIEMENS

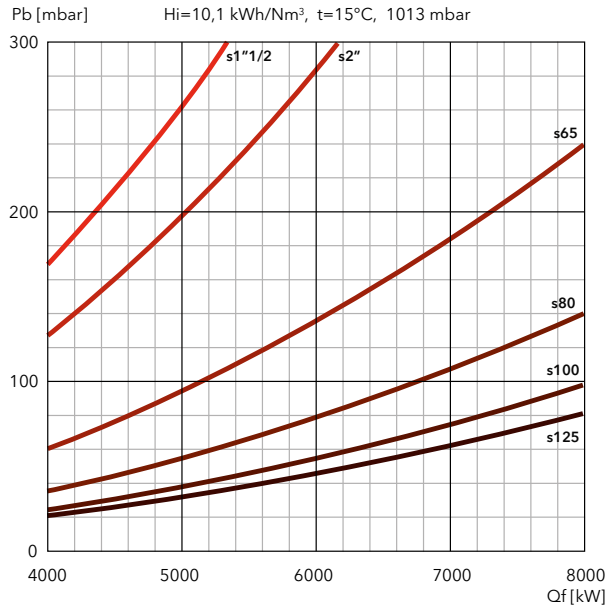

FILTERS

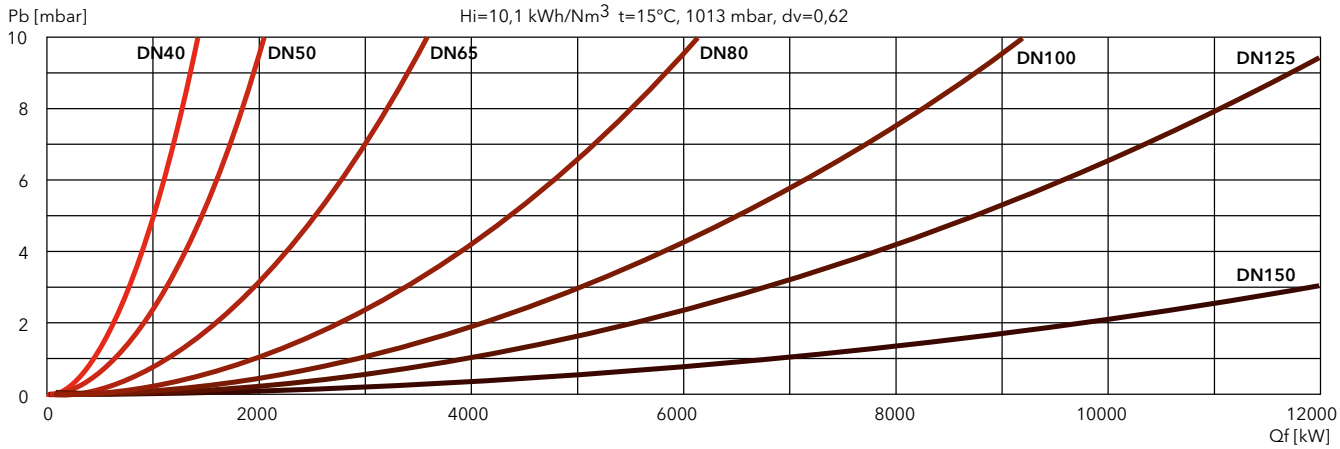

PRESSURE LOSS [BURNER HEAD + GAS TRAIN] (mbar)

N9.8700 G-EU3

DUNGS

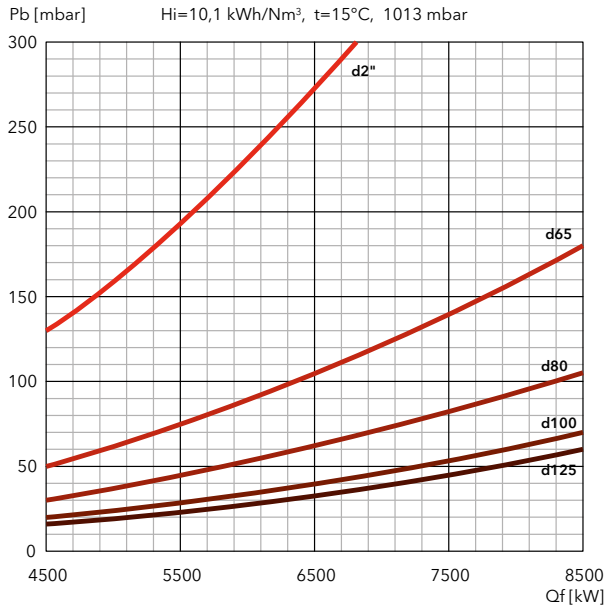

SIEMENS

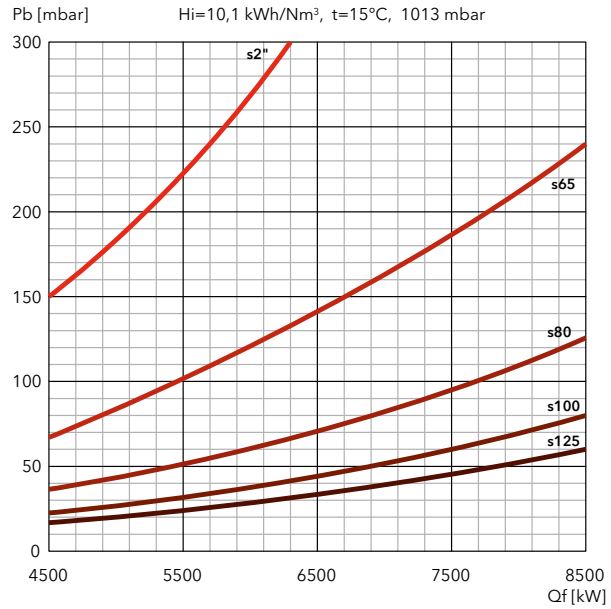

N9.10400 G-EU3

DUNGS

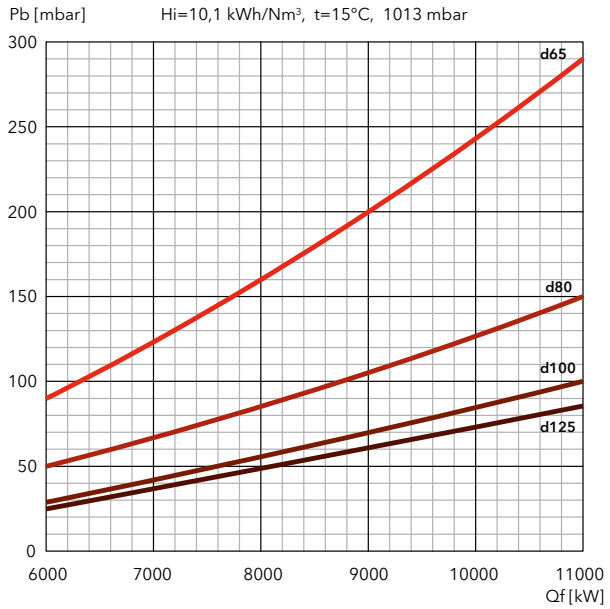

SIEMENS

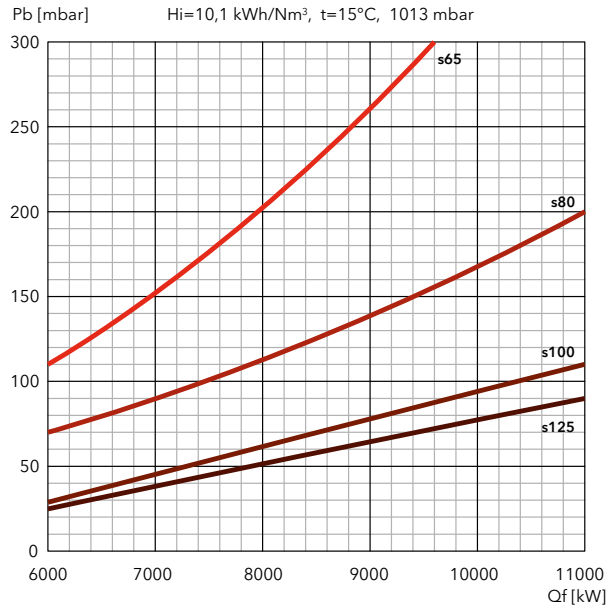

FILTERS

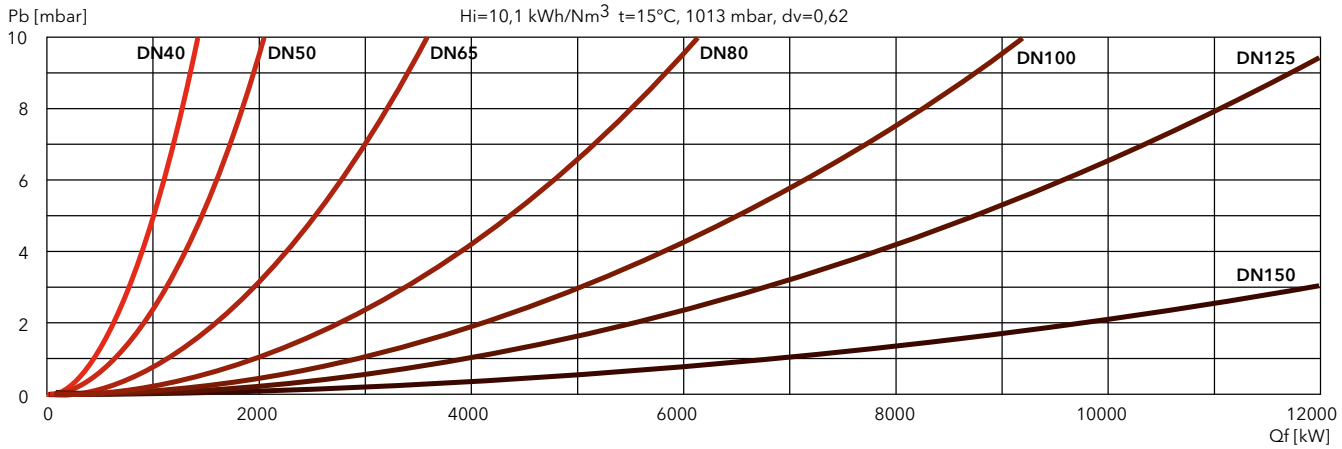

NEXTRON

GAS

Low NOx Class 3

N6 G-EU2N / N7 G-EU2N

350 … 3700 kW
Two stage progressive/modulating electronic

- **Fuels:** natural gas, Hi = 6,99 … 11,39 kWh/Nm³;
  LPG, Hi = 25,89 kWh/Nm³
- **Emission class:** Low NOx class 3 (≤80 mg/kWh) according to EN676
- **Protection level:** IP 41

TECHNICAL DATA

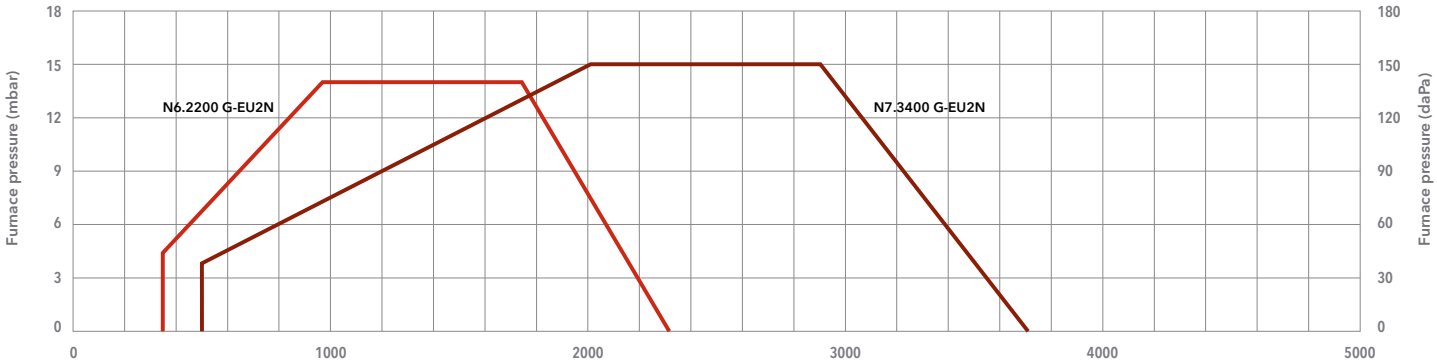

Test conditions conforming to EN676 - Temperature: 20°C - Pressure: 1013,5 mbar - Altitude: 0 m a.s.l.

Power (kW)

	N6.2200 G-EU2N	N7.3400 G-EU2N
Operating range	350 – 2300 kW	490 – 3700 kW
Gas pressure	75 – 500 mbar (75 – 360 mbar for d452 and d453 gas train)	80 – 500 mbar (80 – 360 mbar for d452 and d453 gas train)
Gas connection	DN65	DN65
Control box / flame detector	BT300 / QRA2	BT300 / QRA2
Auxiliary voltage	1NPE AC 230 V – 50 Hz TN-S	1NPE AC 230 V – 50 Hz TN-S
Power supply	3PE AC 400 V – 50 Hz	3PE AC 400 V – 50 Hz
Fan motor	50 Hz – 4 kW	50 Hz – 7,5 kW
Acoustic level	<71 dB(A)	<76 dB(A)
CE certificate	0085CL0215	0085CL0215
Complete burner codes	**on request**	**on request**

GAS TRAINS

DUNGS

Model	Code
GT-d452-1"1/2 (*)	3750510
GT-d453-2" (*)	3750511
GT-d454-65	3750512
GT-d455-80	3750513
GT-d456-100	3750514

SIEMENS

Model	Code
GT-s451-1"1/2	3750525
GT-s452-2"	3750526
GT-s453-65	3750527
GT-s454-80	3750528
GT-s455-100	3750529

FILTERS

Model	Code
FG-Rp1"1/2	3757199
FG-Rp2"	3757200
FG-DN65	3757198
FG-DN80	3757201
FG-DN100	3757195

*: integrated filter

Pressure drops graphs: see following pages
Dimensions of gas trains and gas filters: see page 310

DIMENSIONS (mm)

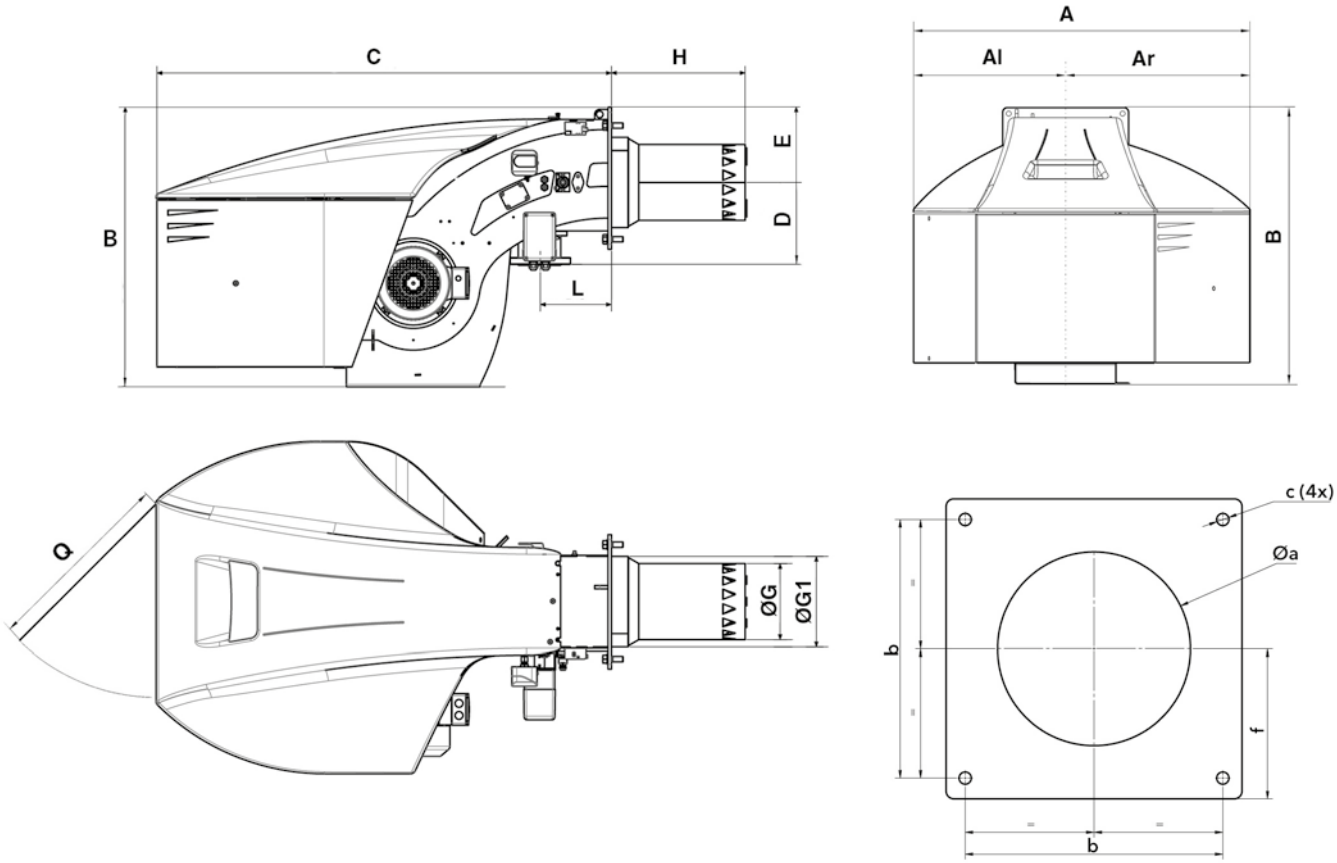

Model	A	Al	Ar	B	C	D	E	ØG	ØG1	H			L	Q	Øa	b	c	f
										KN	KM	KL						
N6.2200 G-EU2N	990	479	511	837	1358	245	225	227	270	400	520	640	215	600	300-340	340	M16	200
N7.3400 G-EU2N	1127	509	618	961	1527	276	255	263	332	420	550	680	225	600	370-400	400	M16	235

PACKAGING

The burner is delivered on a pallet with:
- burner body with mounted combustion head
- gas train and filter
- boiler fixing accessories
- technical documentation

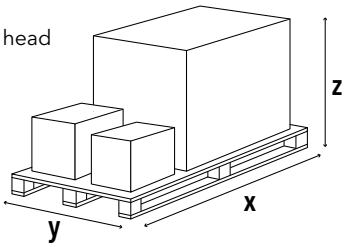

Model	Dimensions (mm)			Gross weight (kg)
	X	Y	Z	
N6.2200 G-EU2N	2300	1500	1573	360
N7.3400 G-EU2N	2300	1500	1573	450

N6 G-EU2N / N7 G-EU2N

350 ... 3700 kW
Two stage progressive/modulating electronic

PRESSURE LOSS [BURNER HEAD + GAS TRAIN] (mbar)

N6.2200 G-EU2N

DUNGS

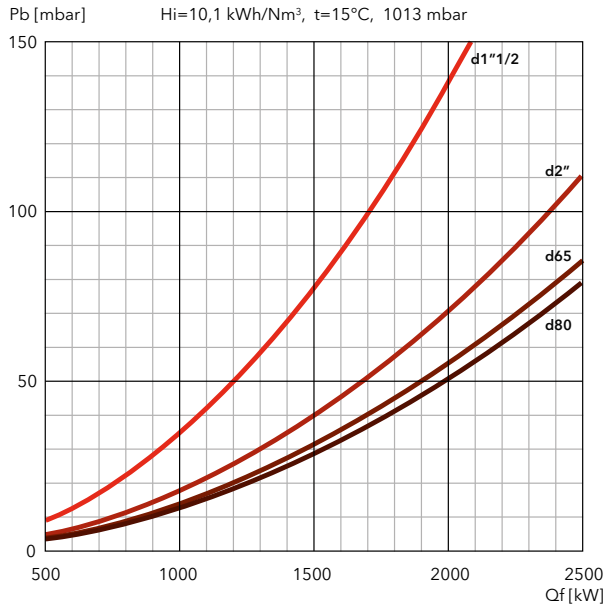

SIEMENS

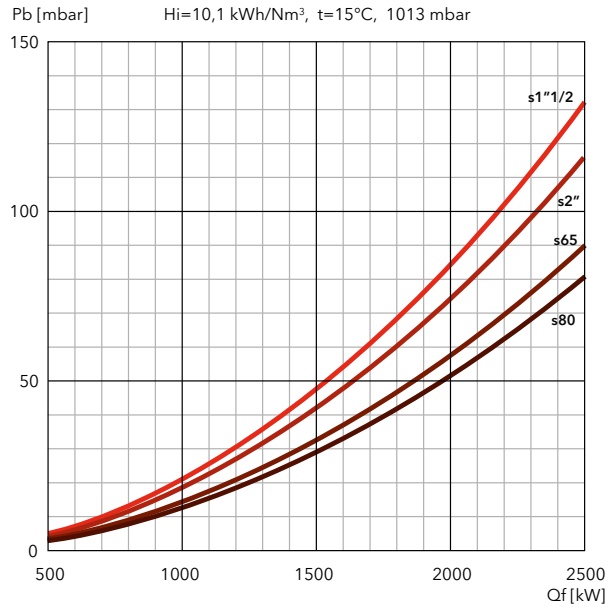

FILTERS

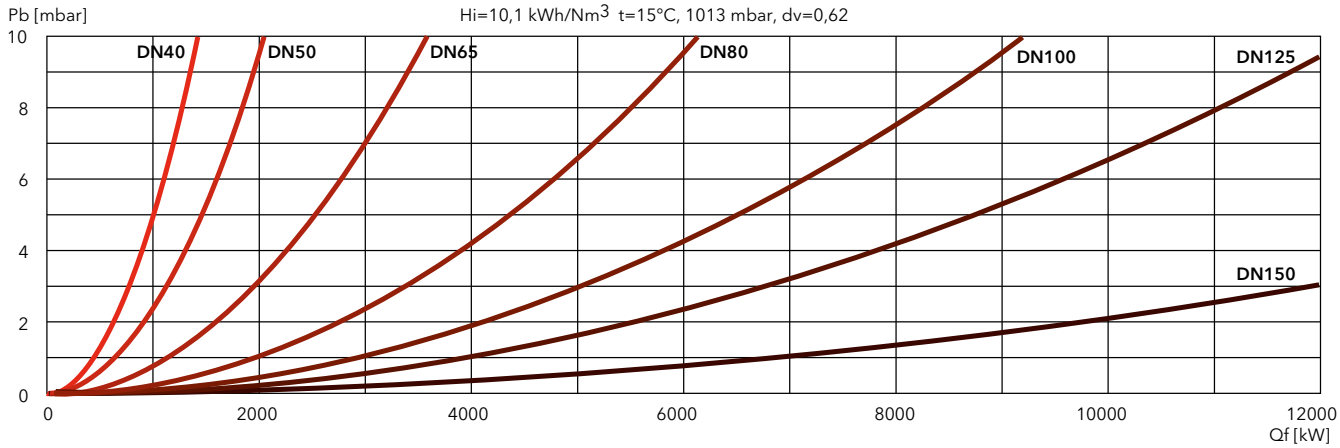

PRESSURE LOSS [BURNER HEAD + GAS TRAIN] (mbar)

N7.3400 G-EU2N

DUNGS

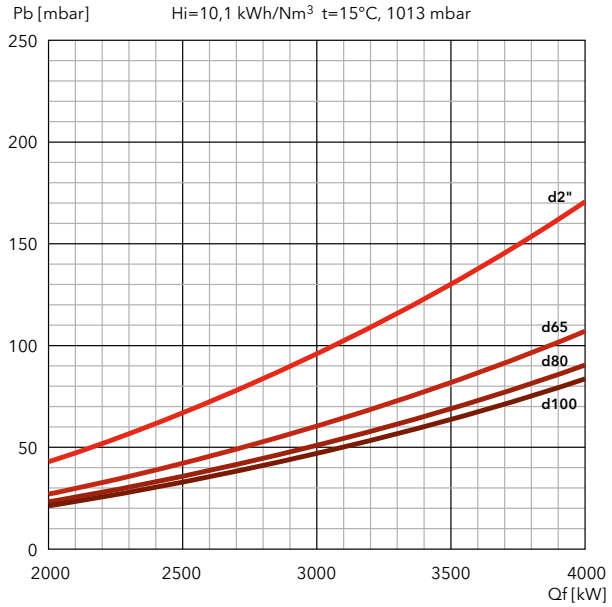

SIEMENS

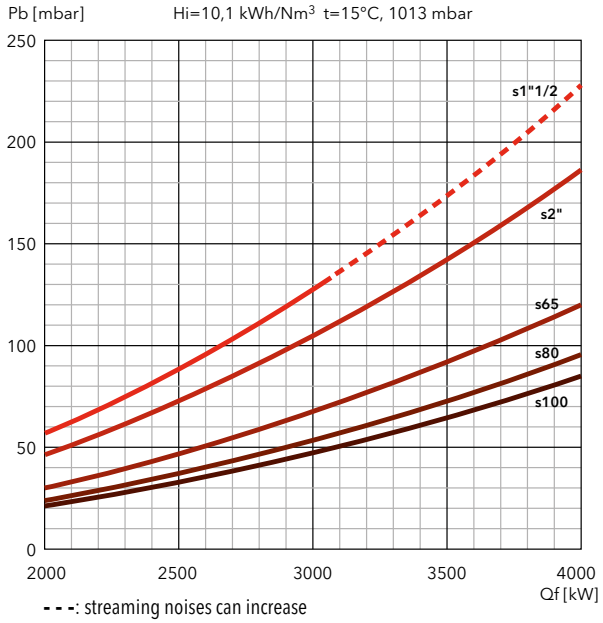

- - -: streaming noises can increase

FILTERS

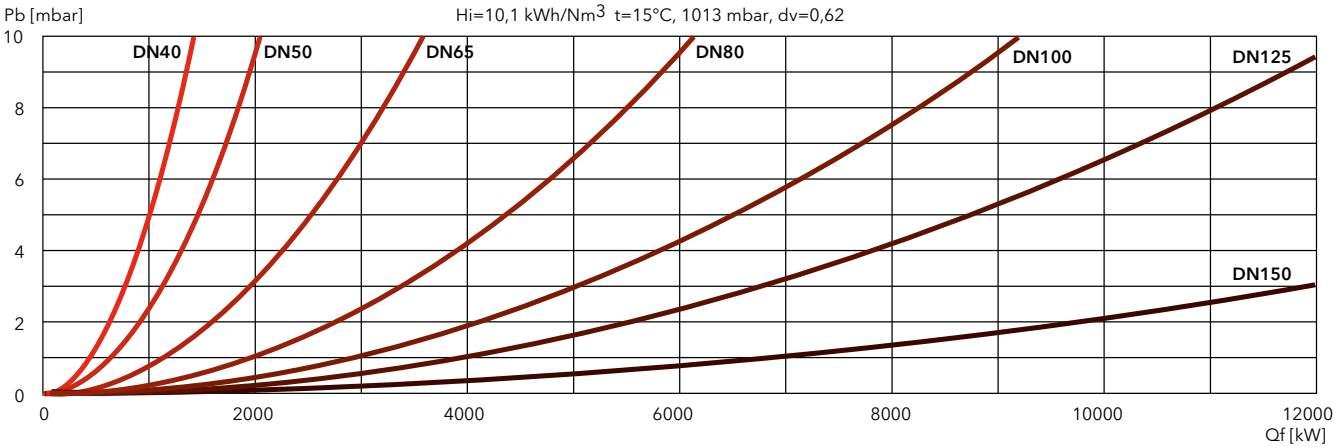

NEXTRON

GAS

Low NOx Class 3

N6 G-EU2 / N7 G-EU2

340 … 4290 kW
Two stage progressive/modulating electronic

- **Fuels:** natural gas, Hi = 6,99 … 11,39 kWh/Nm³;
  LPG, Hi = 25,89 kWh/Nm³
- **Emission class:** Low NOx class 3 (≤80 mg/kWh) according to EN676
- **Protection level:** IP 41

TECHNICAL DATA

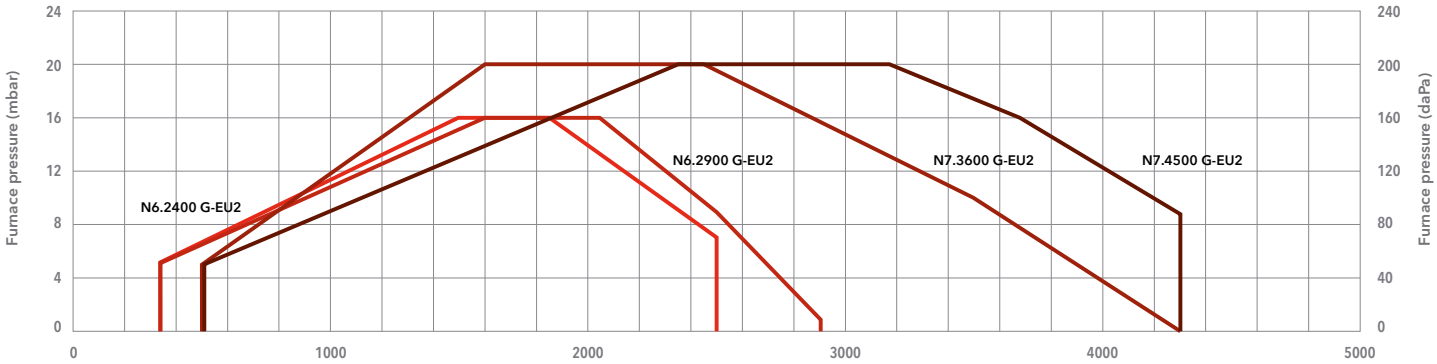

Test conditions conforming to EN676 - Temperature: 20°C - Pressure: 1013,5 mbar - Altitude: 0 m a.s.l.

Power (kW)

	N6.2400 G-EU2	N6.2900 G-EU2	N7.3600 G-EU2	N7.4500 G-EU2
Operating range	340 – 2500 kW	360 – 2900 kW	490 – 4290 kW	510 – 4290 kW
Gas pressure	55 – 500 mbar (55 – 360 mbar for d452 and d453 gas train)	75 – 500 mbar (75 – 360 mbar for d452 and d453 gas train)	75 – 500 mbar (75 – 360 mbar for d452 and d453 gas train)	75 – 500 mbar (75 – 360 mbar for d452 and d453 gas train)
Gas connection	DN65	DN65	DN65	DN65
Control box / flame detector	BT300 / QRA2	BT300 / QRA2	BT300 / QRA2	BT300 / QRA2
Auxiliary voltage	1NPE AC 230 V – 50 Hz TN-S	1NPE AC 230 V – 50 Hz TN-S	1NPE AC 230 V – 50 Hz TN-S	1NPE AC 230 V – 50 Hz TN-S
Power supply	3PE AC 400 V – 50 Hz	3PE AC 400 V – 50 Hz	3PE AC 400 V – 50 Hz	3PE AC 400 V – 50 Hz
Fan motor	50 Hz – 3 kW	50 Hz – 4 kW	50 Hz – 5,5 kW	50 Hz – 7,5 kW
Acoustic level	<80 dB(A)	<80,5 dB(A)	<81,5 dB(A)	<84 dB(A)
CE certificate	0085CL0215	0085CL0215	0085CL0215	0085CL0215
Complete burner codes	**on request**	**on request**	**on request**	**on request**

GAS TRAINS

DUNGS

Model	Code
GT-d452-1"1/2 (*)	3750510
GT-d453-2" (*)	3750511
GT-d454-65	3750512
GT-d455-80	3750513
GT-d456-100	3750514

*: integrated filter

SIEMENS

Model	Code
GT-s451-1"1/2	3750525
GT-s452-2"	3750526
GT-s453-65	3750527
GT-s454-80	3750528
GT-s455-100	3750529
GT-s456-125	3750530

FILTERS

Model	Code
FG-Rp1"1/2	3757199
FG-Rp2"	3757200
FG-DN65	3757198
FG-DN80	3757201
FG-DN100	3757195
FG-DN125	3757209

Pressure drops graphs: see following pages
Dimensions of gas trains and gas filters: see page 310

DIMENSIONS (mm)

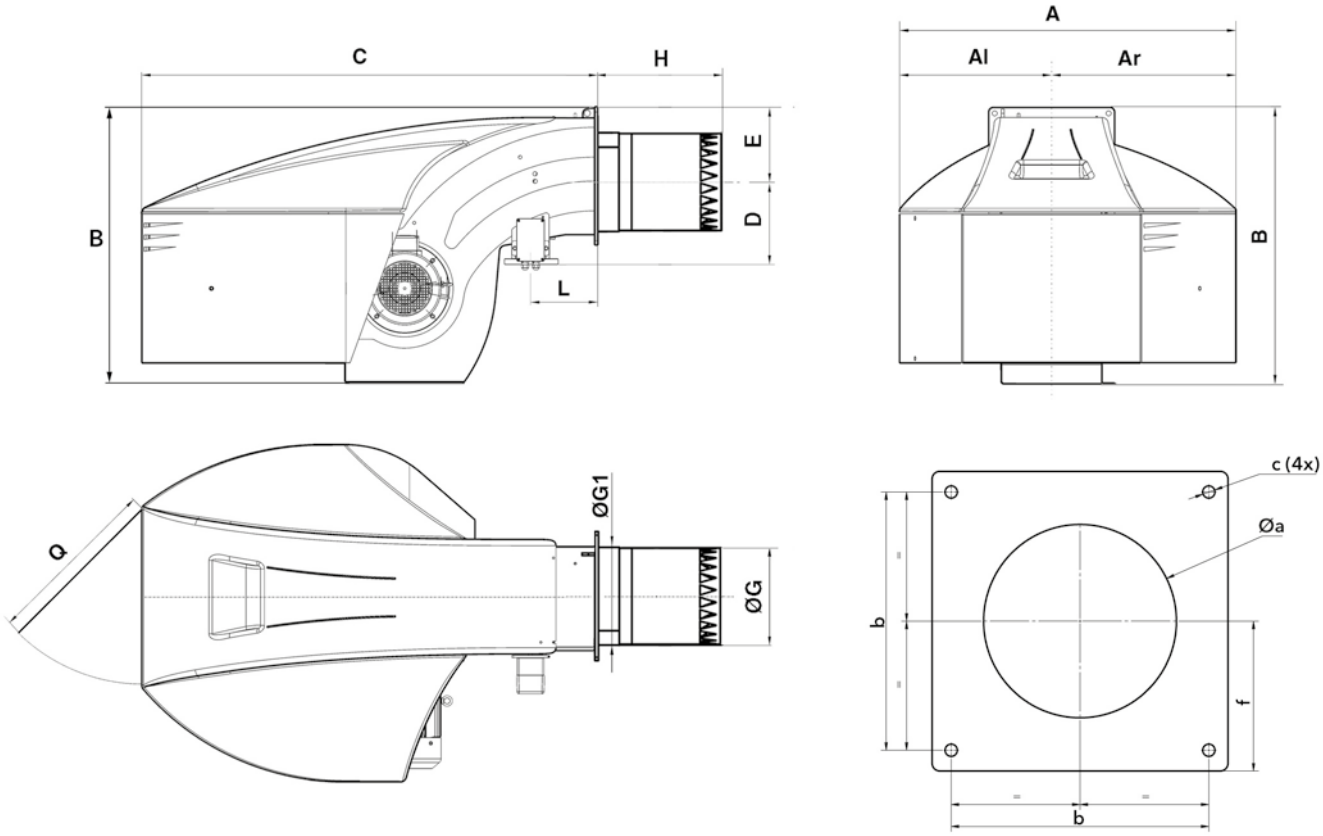

Model	A	Al	Ar	B	C	D	E	ØG	ØG1	H			L	Q	Øa	b	c	f
										KN	KM	KL						
N6... G-EU2	990	479	511	837	1358	245	225	263	277	400	520	640	215	600	330-340	340	M16	200
N7... G-EU2	1127	509	618	961	1527	276	255	325	343	420	550	680	225	600	360-400	400	M16	235

PACKAGING

The burner is delivered on a pallet with:
- burner body with mounted combustion head
- gas train and filter
- boiler fixing accessories
- technical documentation

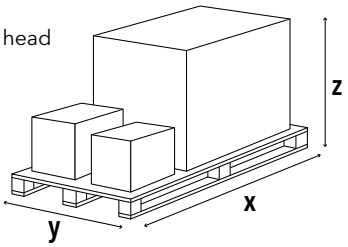

Model	Dimensions (mm)			Gross weight (kg)
	X	Y	Z	
N6.2400 G-EU2	2300	1500	1573	360
N6.2900 G-EU2	2300	1500	1573	360
N7.3600 G-EU2	2300	1500	1573	450
N7.4500 G-EU2	2300	1500	1573	450

N6 G-EU2 / N7 G-EU2

340 ... 4290 kW
Two stage progressive/modulating electronic

PRESSURE LOSS [BURNER HEAD + GAS TRAIN] (mbar)

N6.2400 G-EU2

DUNGS

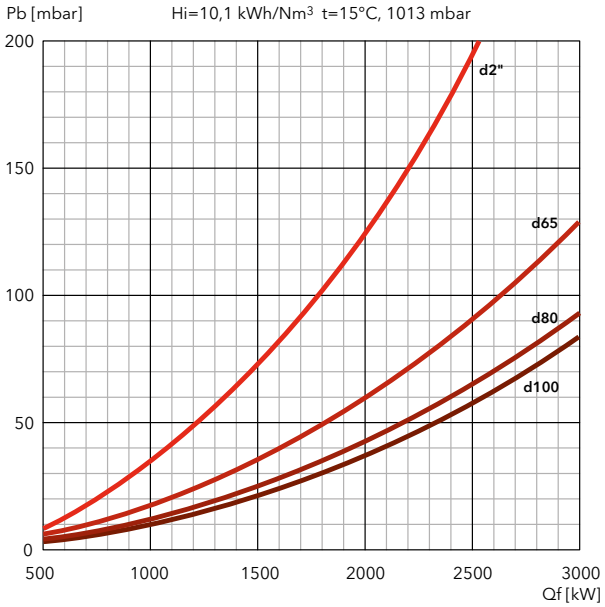

SIEMENS

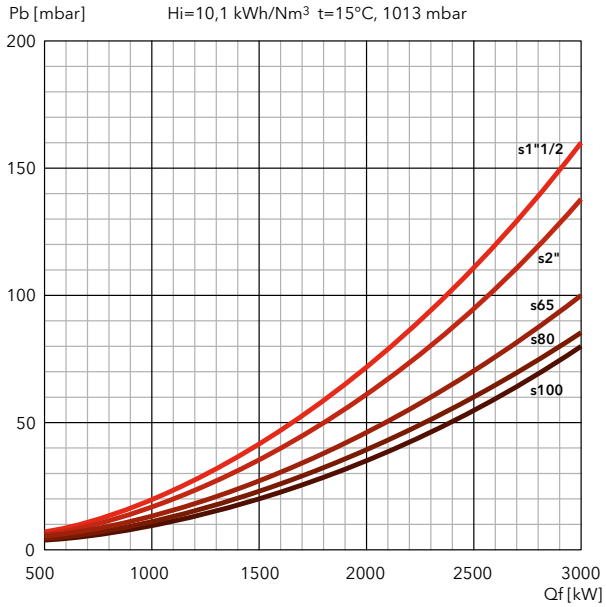

N6.2900 G-EU2

DUNGS

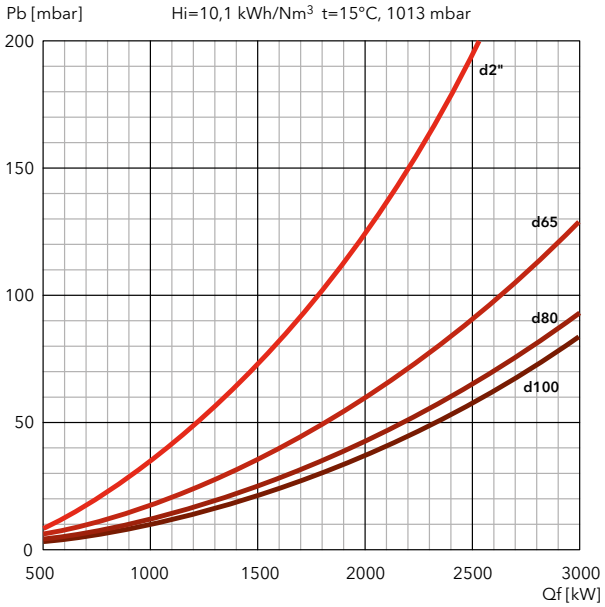

SIEMENS

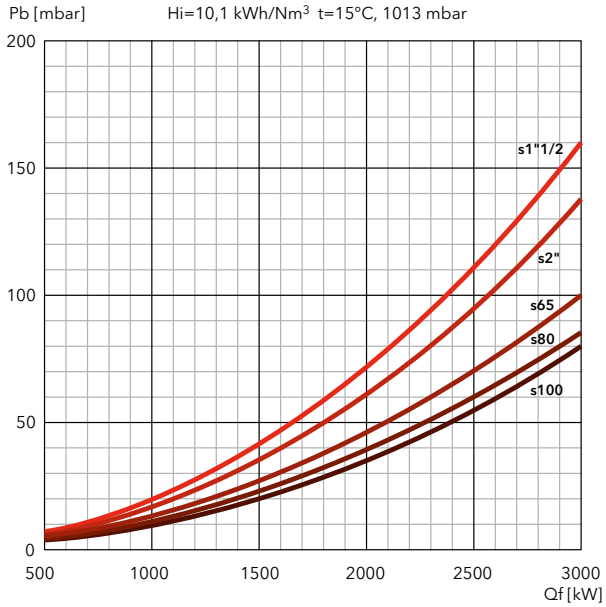

FILTERS

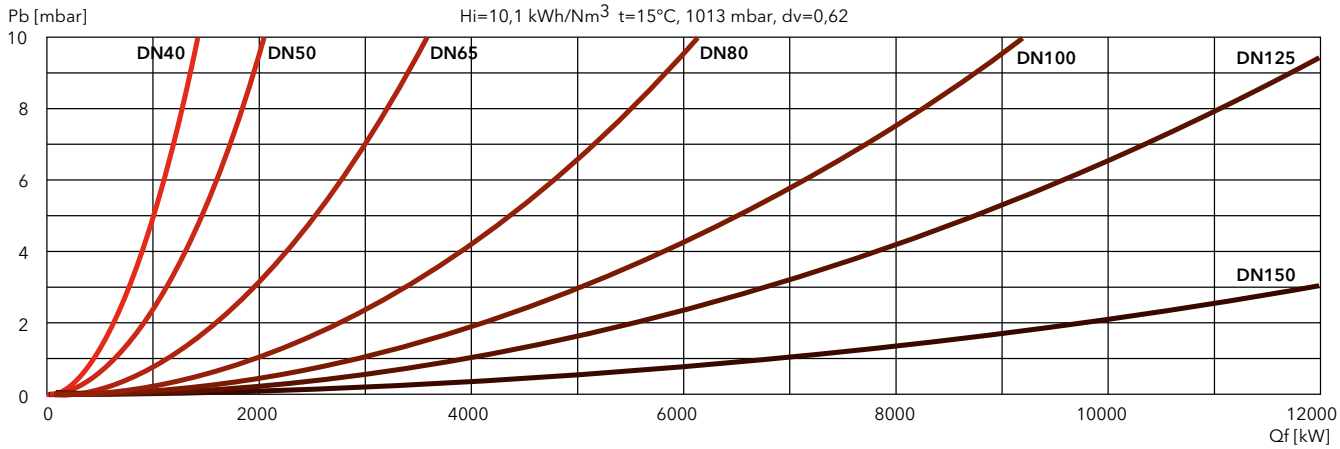

PRESSURE LOSS [BURNER HEAD + GAS TRAIN] (mbar)

N7.3600 G-EU2

DUNGS

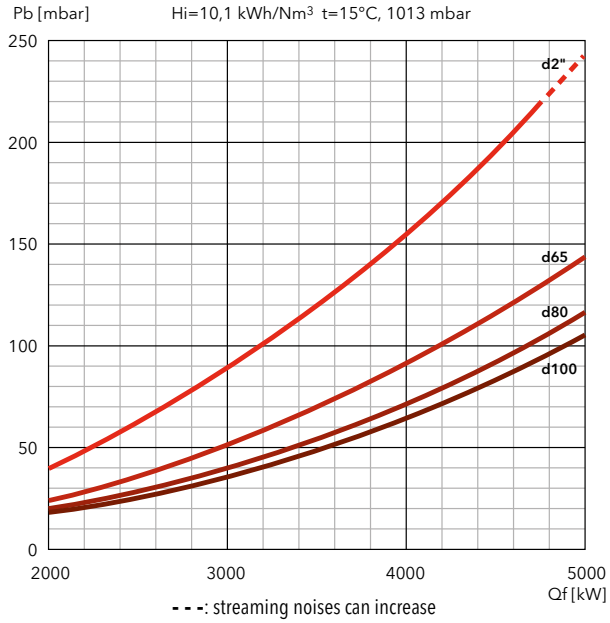

- - -: streaming noises can increase

SIEMENS

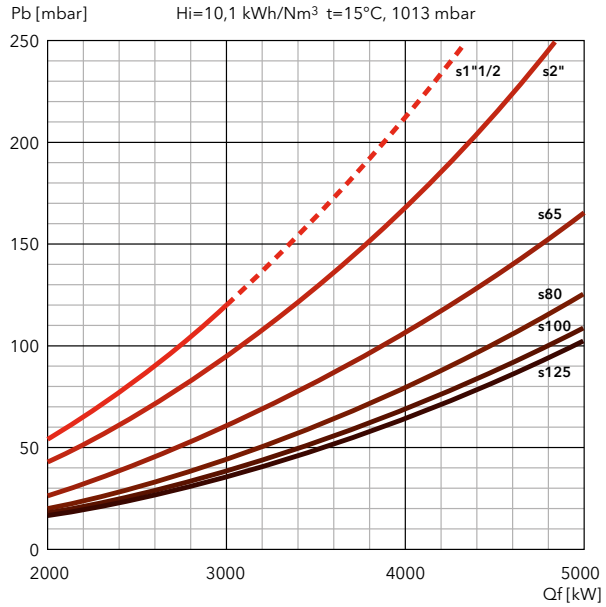

N7.4500 G-EU2

DUNGS

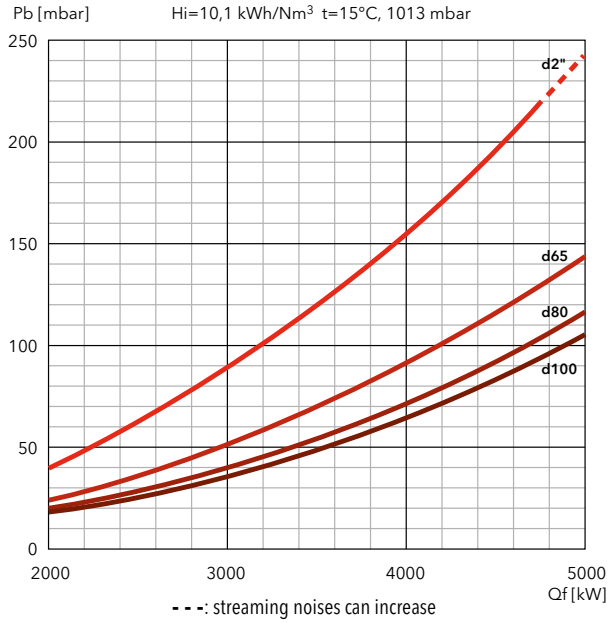

- - -: streaming noises can increase

SIEMENS

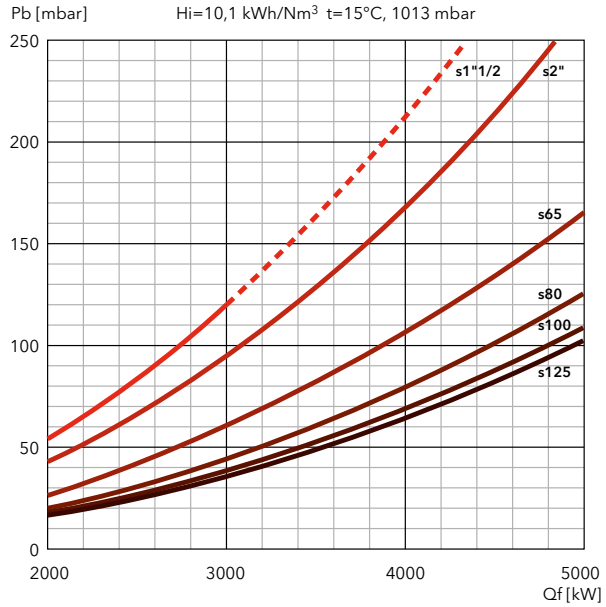

FILTERS

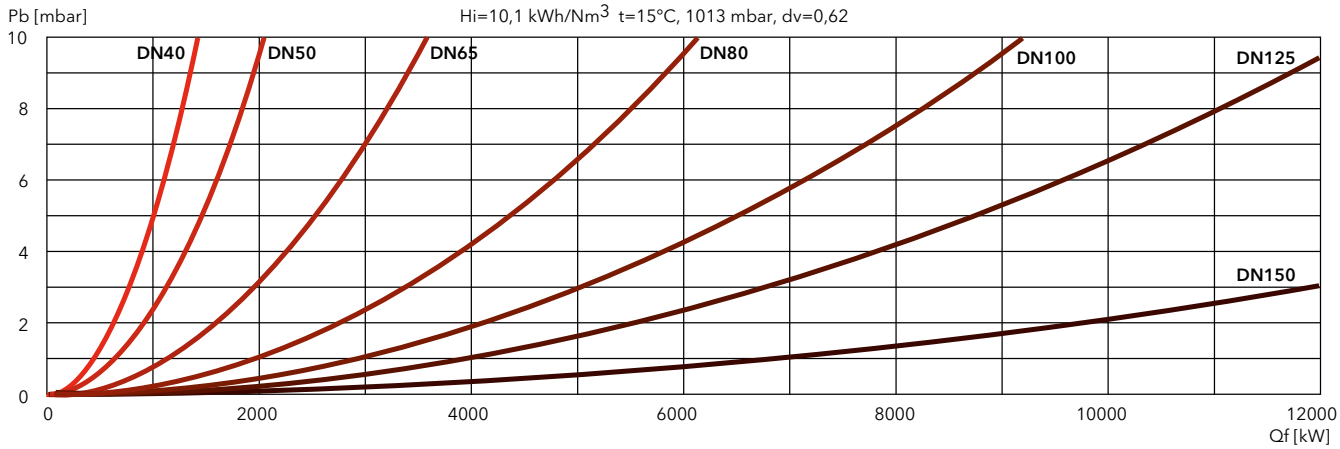

NEXTRON

GAS

Low NOx Class 3

N9 G-EU2N

970 … 8250 kW
Two stage progressive/modulating electronic

- **Fuels:** natural gas, Hi = 6,99 … 11,39 kWh/Nm³;
  LPG, Hi = 25,89 kWh/Nm³
- **Emission class:** Low NOx class 3 (≤80 mg/kWh) according to EN676
- **Protection level:** IP 41

TECHNICAL DATA

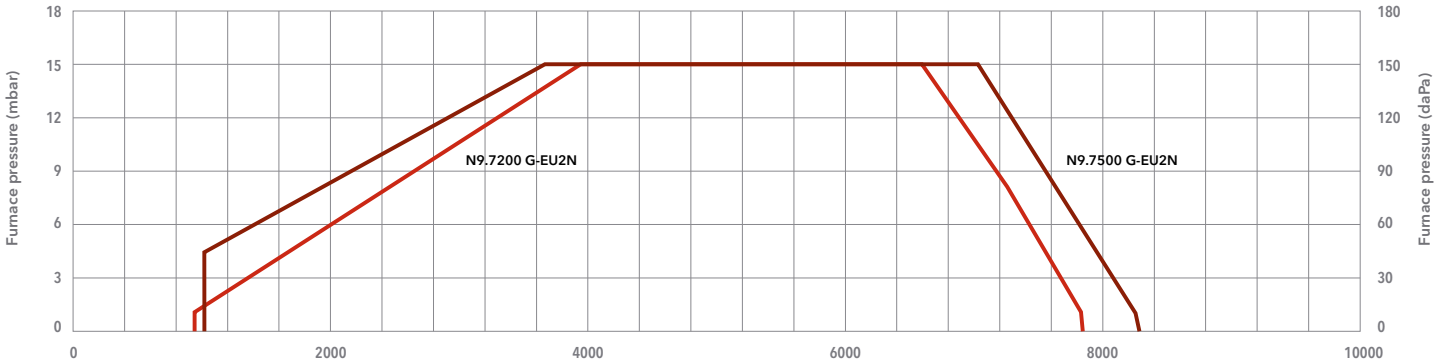

Test conditions conforming to EN676 - Temperature: 20°C - Pressure: 1013,5 mbar - Altitude: 0 m a.s.l.

	N9.7200 G-EU2N	N9.7500 G-EU2N
Operating range	970 – 7840 kW	1020 – 8250 kW
Gas pressure	150 – 500 mbar (150 – 360 mbar for d457 gas train)	120 – 500 mbar (120 – 360 mbar for d457 gas train)
Gas connection	DN100	DN100
Control box / flame detector	BT300 / QRA2	BT300 / QRA2
Auxiliary voltage	1NPE AC 230 V – 50 Hz TN-S	1NPE AC 230 V – 50 Hz TN-S
Power supply	3PE AC 400 V – 50 Hz	3PE AC 400 V – 50 Hz
Fan motor	50 Hz – 22 kW	50 Hz – 22 kW
Acoustic level	<81,7 dB(A)	<81,7 dB(A)
CE certificate	0085CL0215	0085CL0215
Complete burner codes	**on request**	**on request**

GAS TRAINS

DUNGS

Model	Code
GT-d457-2" (*)	3750515
GT-d458-65	3750516
GT-d459-80	3750517
GT-d460-100	3750518

SIEMENS

Model	Code
GT-s458-65	3750538
GT-s459-80	3750539
GT-s460-100	3750540
GT-s461-125	3750541

FILTERS

Model	Code
FG-DN65	3757198
FG-DN80	3757201
FG-DN100	3757195
FG-DN125	3757209

*: integrated filter

Pressure drops graphs: see following pages
Dimensions of gas trains and gas filters: see page 311

DIMENSIONS (mm)

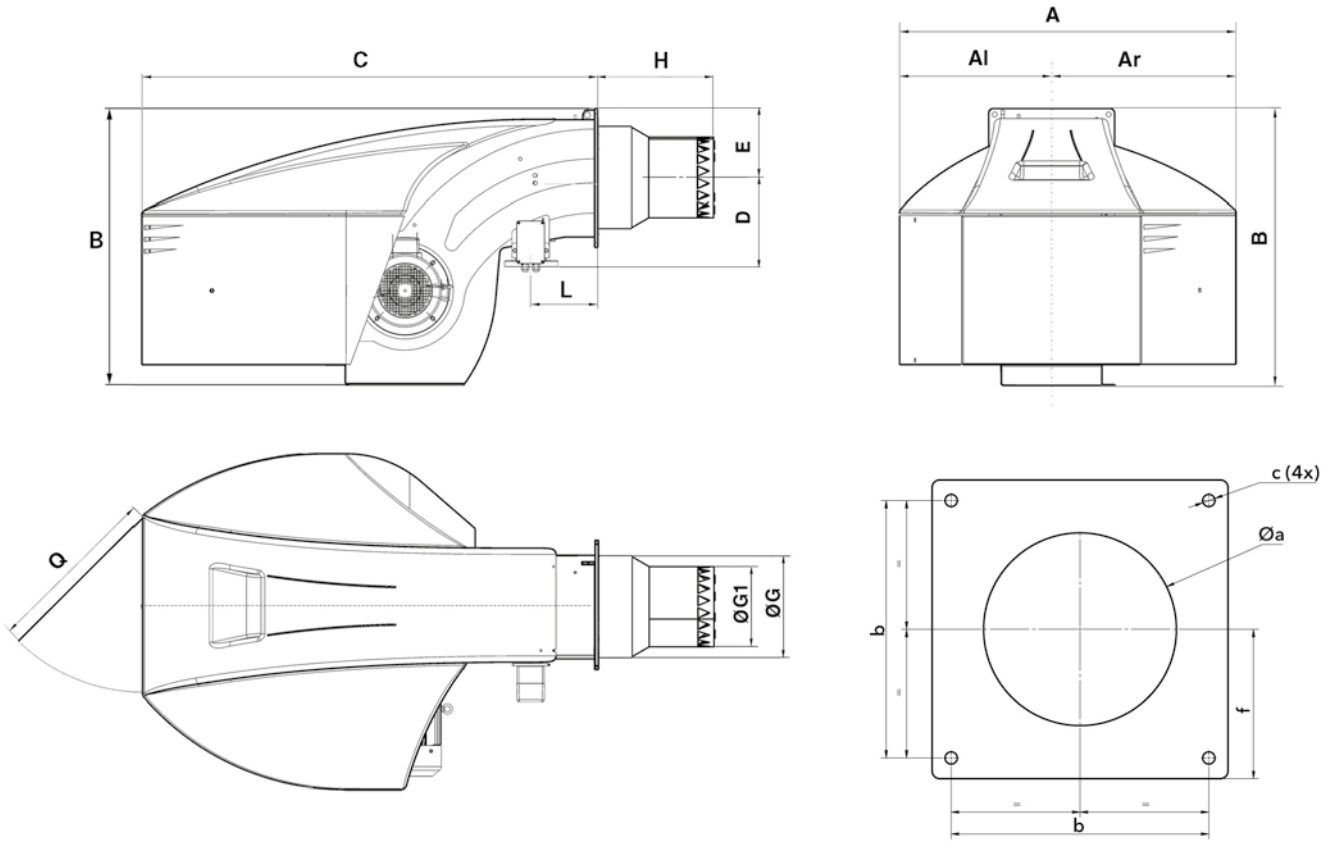

Model	A	Al	Ar	B	C	D	E	ØG	ØG1	H			L	Q	Øa	b	c	f
										KN	KM	KL						
N9.7200 G-EU2N	1414	669	745	1291	1928	369	293	439	346	500	640	780	230	800	460-480	505	M20	293
N9.7500 G-EU2N	1414	669	745	1291	1928	369	293	439	369	550	700	850	230	800	460-480	505	M20	293

PACKAGING

The burner is delivered on a pallet with:
- burner body with mounted combustion head
- gas train and filter
- boiler fixing accessories
- technical documentation

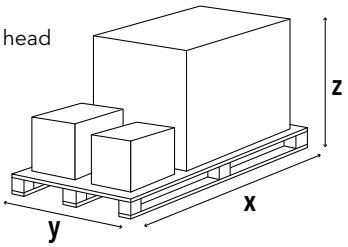

Model	Dimensions (mm)			Gross weight (kg)
	X	Y	Z	
N9.7200 G-EU2N	2900	1600	1573	760
N9.7500 G-EU2N	2900	1600	1573	760

N9 G-EU2N

970 ... 8250 kW
Two stage progressive/modulating electronic

PRESSURE LOSS [BURNER HEAD + GAS TRAIN] (mbar)

N9.7200 G-EU2N

DUNGS

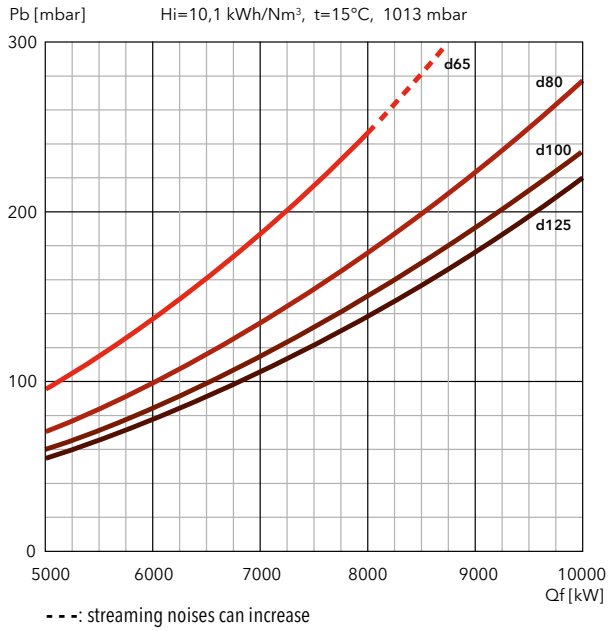

- - -: streaming noises can increase

SIEMENS

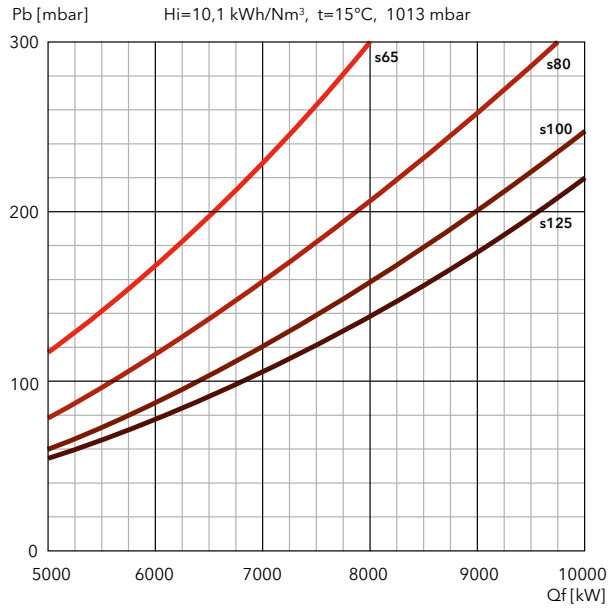

FILTERS

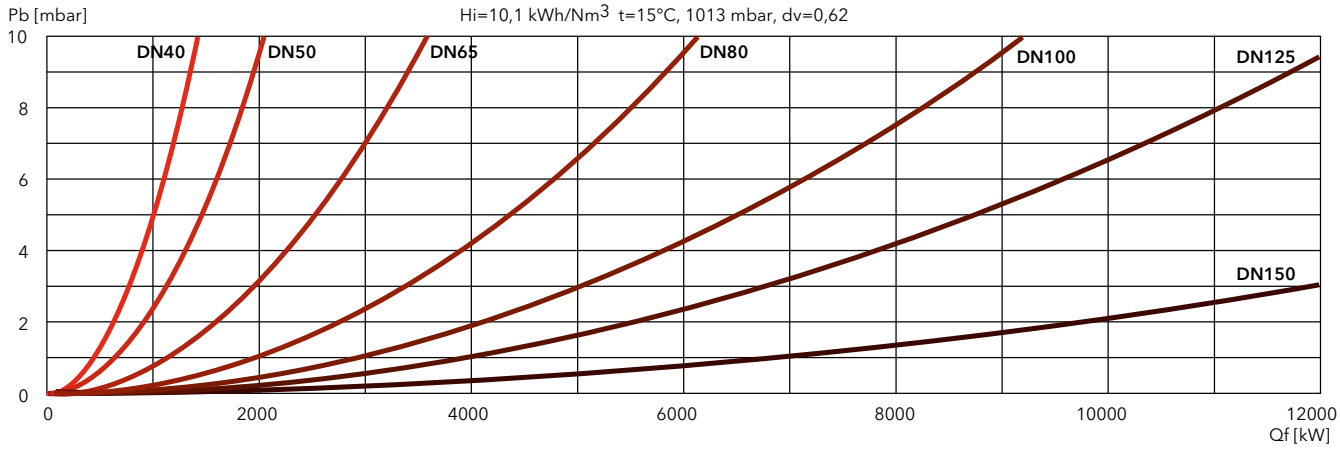

PRESSURE LOSS [BURNER HEAD + GAS TRAIN] (mbar)

N9.7500 G-EU2N

DUNGS

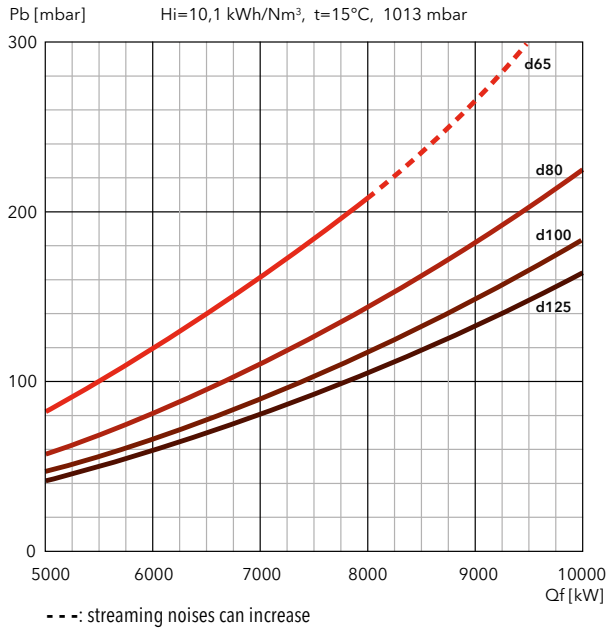

SIEMENS

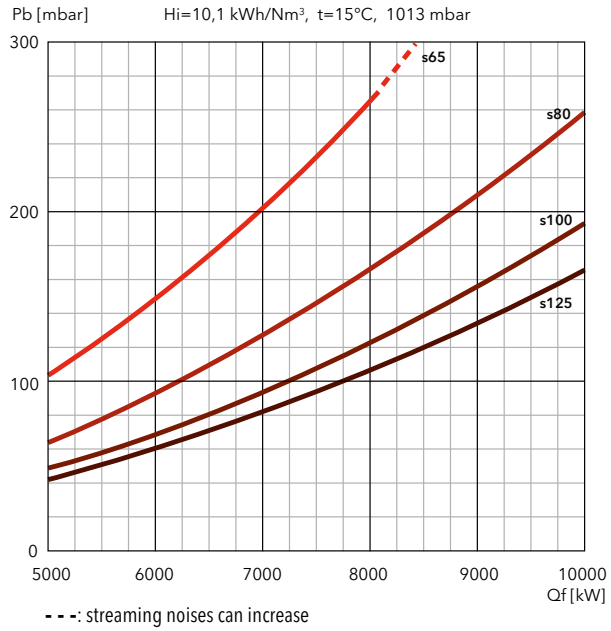

FILTERS

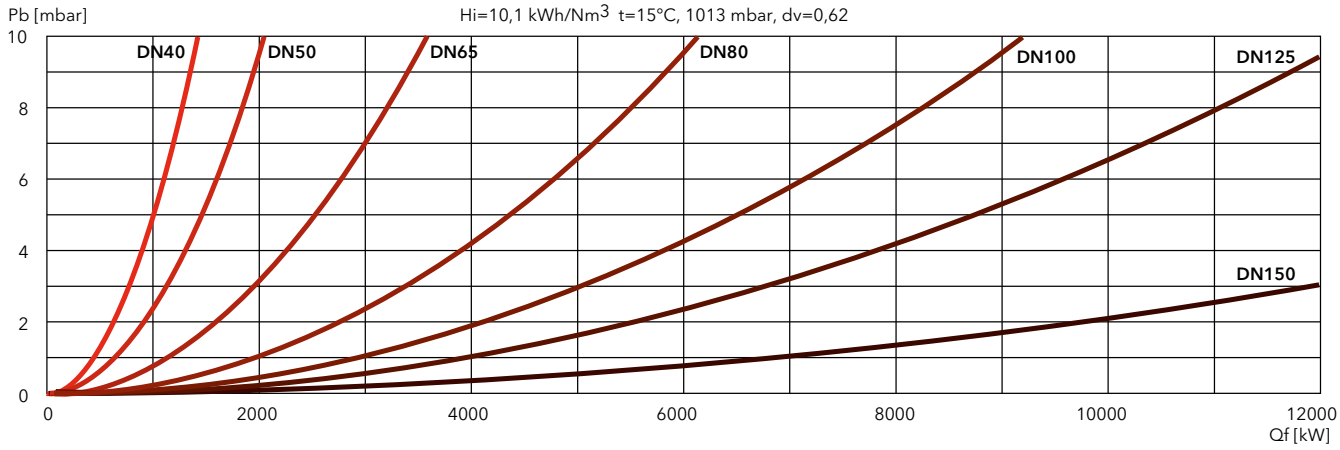

NEXTRON

GAS

Low NOx Class 2

N6 G-E / N7 G-E

390 … 5000 kW
Two stage progressive/modulating electronic

- **Fuels:** natural gas, Hi = 6,99 … 11,39 kWh/Nm³;
  LPG, Hi = 25,89 kWh/Nm³
- **Emission class:** Low NOx class 2 (≤120 mg/kWh) according to EN676
- **Protection level:** IP 41

TECHNICAL DATA

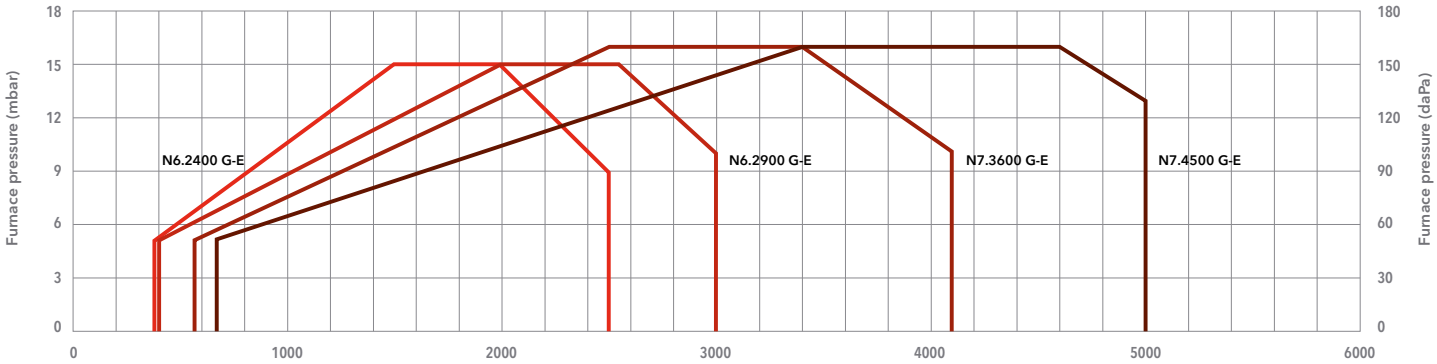

Test conditions conforming to EN676 - Temperature: 20°C - Pressure: 1013,5 mbar - Altitude: 0 m a.s.l.

Power (kW)

	N6.2400 G-E	N6.2900 G-E	N7.3600 G-E	N7.4500 G-E
Operating range	390 – 2500 kW	400 – 3000 kW	580 – 4100 kW	680 – 5000 kW
Gas pressure	50 – 500 mbar (50 – 360 mbar for d452 and d453 gas train)		50 – 500 mbar (50 – 360 mbar for d452 and d453 gas train)	
Gas connection	DN65	DN65	DN65	DN65
Control box / flame detector	BT300 / Ionisation	BT300 / Ionisation	BT300 / Ionisation	BT300 / Ionisation
Auxiliary voltage	1NPE AC 230 V – 50 Hz TN-S	1NPE AC 230 V – 50 Hz TN-S	1NPE AC 230 V – 50 Hz TN-S	1NPE AC 230 V – 50 Hz TN-S
Power supply	3PE AC 400 V – 50 Hz	3PE AC 400 V – 50 Hz	3PE AC 400 V – 50 Hz	3PE AC 400 V – 50 Hz
Fan motor	50 Hz – 3 kW	50 Hz – 4 kW	50 Hz – 5,5 kW	50 Hz – 7,5 kW
Acoustic level	<70 dB(A)	<71 dB(A)	<74 dB(A)	<75 dB(A)
CE certificate	0085CL0215	0085CL0215	0085CL0215	0085CL0215
Complete burner codes	**on request**	**on request**	**on request**	**on request**

GAS TRAINS

DUNGS

Model	Code
GT-d452-1"1/2 (*)	3750510
GT-d453-2" (*)	3750511
GT-d454-65	3750512
GT-d455-80	3750513
GT-d456-100	3750514

*: integrated filter

SIEMENS

Model	Code
GT-s451-1"1/2	3750525
GT-s452-2"	3750526
GT-s453-65	3750527
GT-s454-80	3750528
GT-s455-100	3750529
GT-s456-125	3750530

FILTERS

Model	Code
FG-Rp1"1/2	3757199
FG-Rp2"	3757200
FG-DN65	3757198
FG-DN80	3757201
FG-DN100	3757195
FG-DN125	3757209

Pressure drops graphs: see following pages
Dimensions of gas trains and gas filters: see page 310

DIMENSIONS (mm)

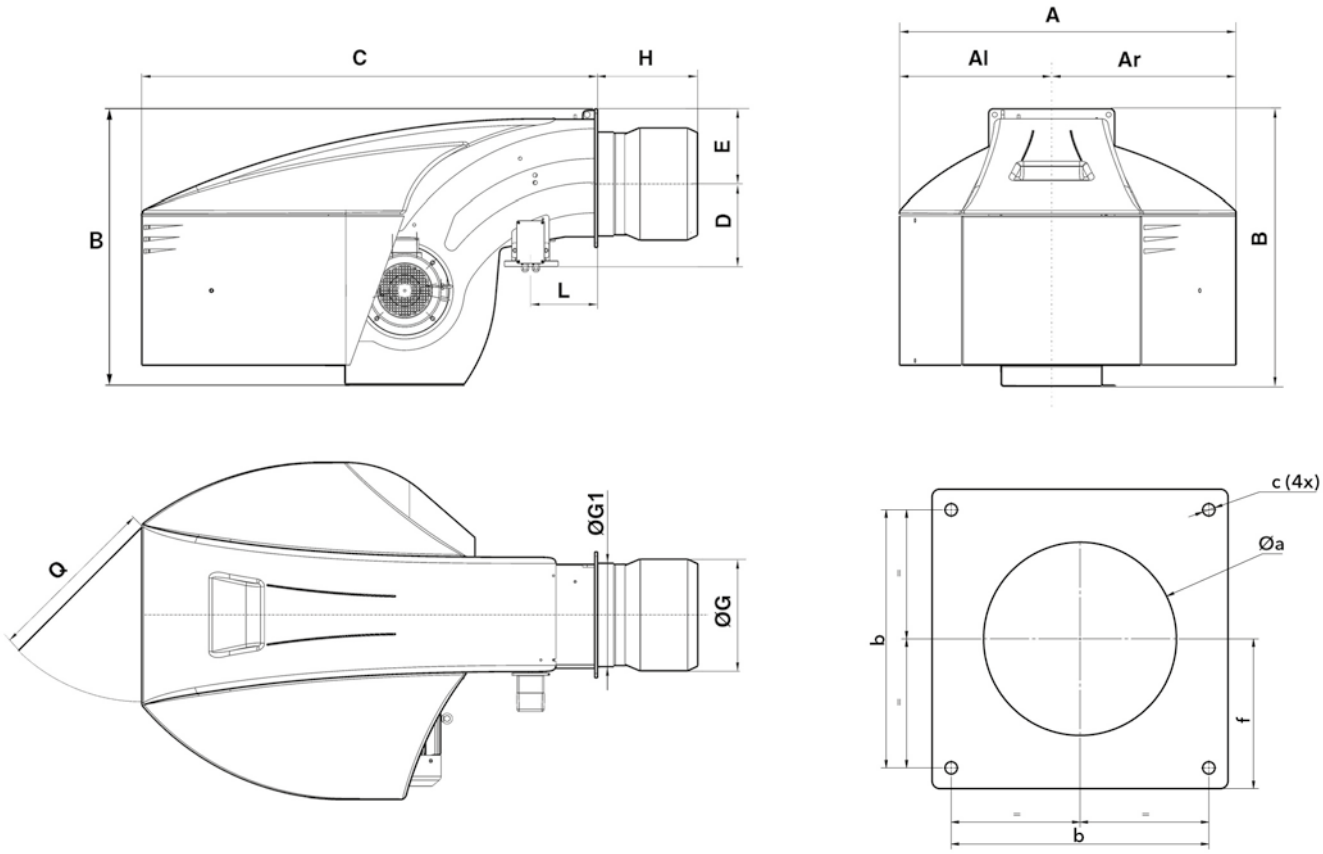

Model	A	Al	Ar	B	C	D	E	ØG	ØG1	H			L	Q
										KN	KM	KL		
N6... G-E	989	479	510	837	1361	245	225	320	270	330	450	570	215	600
N7... G-E	1128	511	618	961	1529	276	255	370	332	375	505	635	225	600

Øa	b	c	f
330-340	340	M16	200
380-400	400	M16	235

PACKAGING

The burner is delivered on a pallet with:
- burner body with mounted combustion head
- gas train and filter
- boiler fixing accessories
- technical documentation

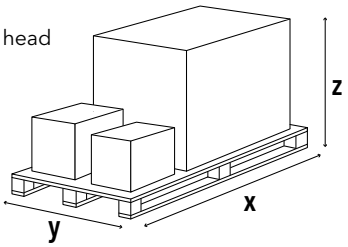

Model	Dimensions (mm)			Gross weight (kg)
	X	Y	Z	
N6.2400 G-E	2300	1500	1573	360
N6.2900 G-E	2300	1500	1573	360
N7.3600 G-E	2300	1500	1573	450
N7.4500 G-E	2300	1500	1573	450

N6 G-E / N7 G-E

390 ... 5000 kW
Two stage progressive/modulating electronic

PRESSURE LOSS [BURNER HEAD + GAS TRAIN] (mbar)

N6.2400 G-E

DUNGS

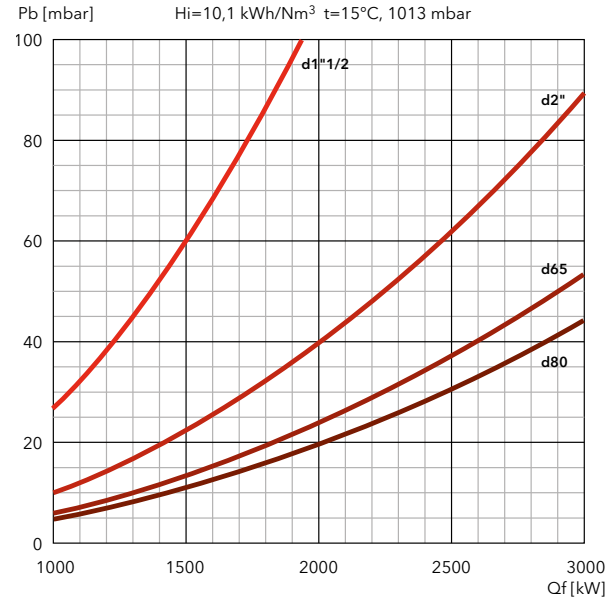

SIEMENS

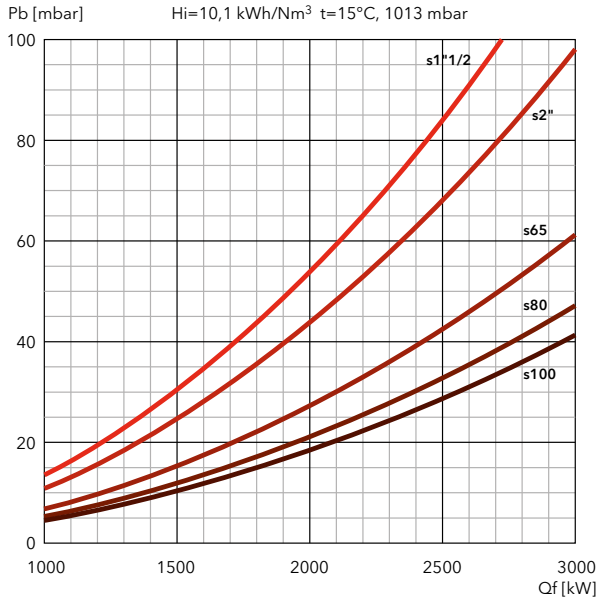

N6.2900 G-E

DUNGS

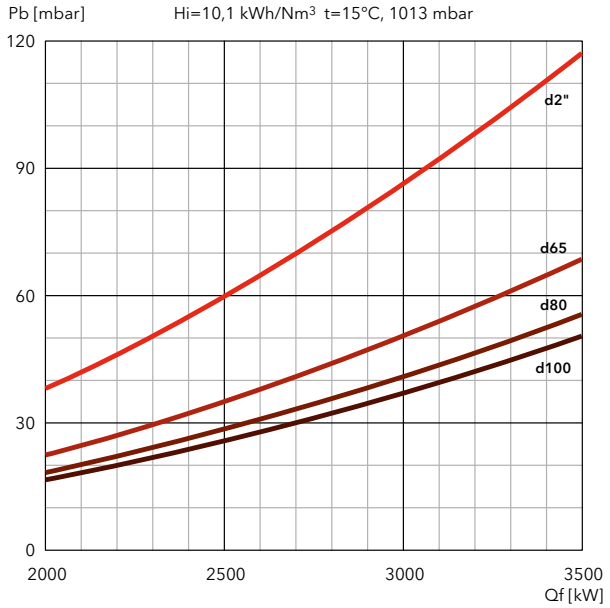

SIEMENS

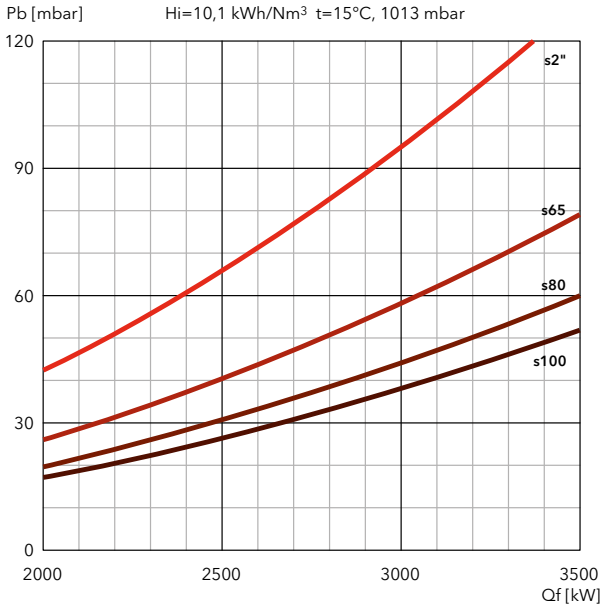

FILTERS

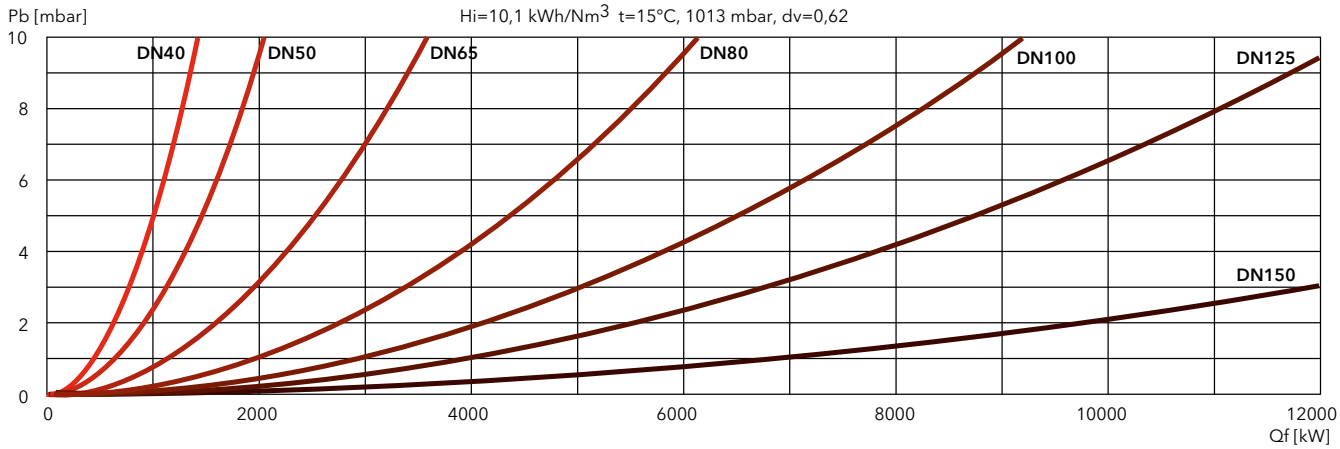

PRESSURE LOSS [BURNER HEAD + GAS TRAIN] (mbar)

N7.3600 G-E

DUNGS

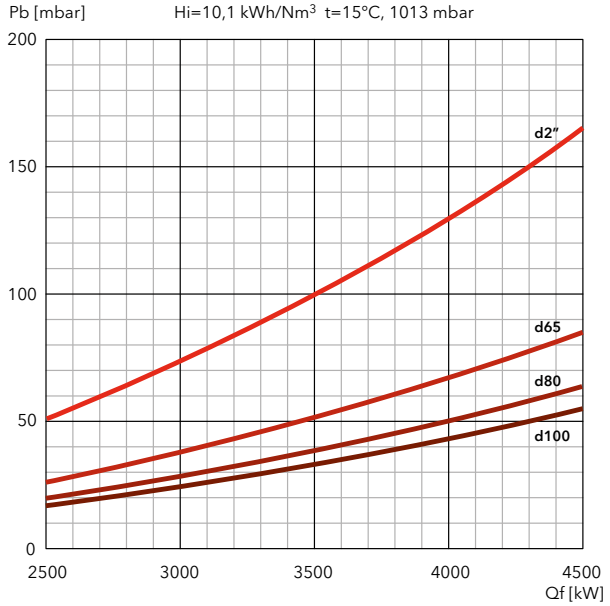

SIEMENS

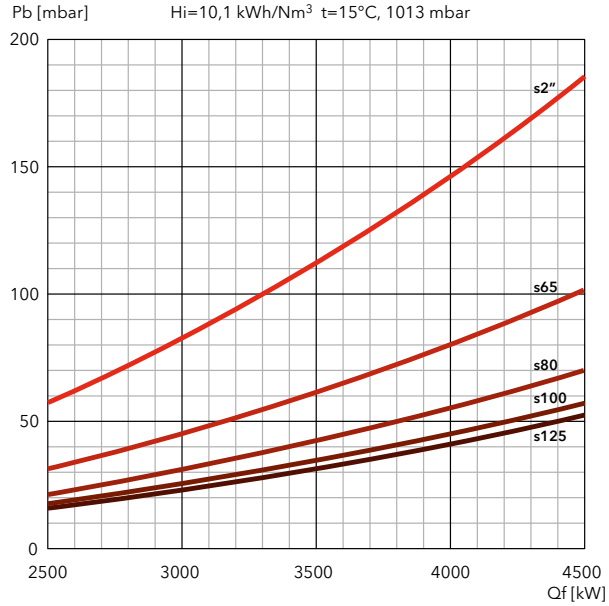

N7.4500 G-E

DUNGS

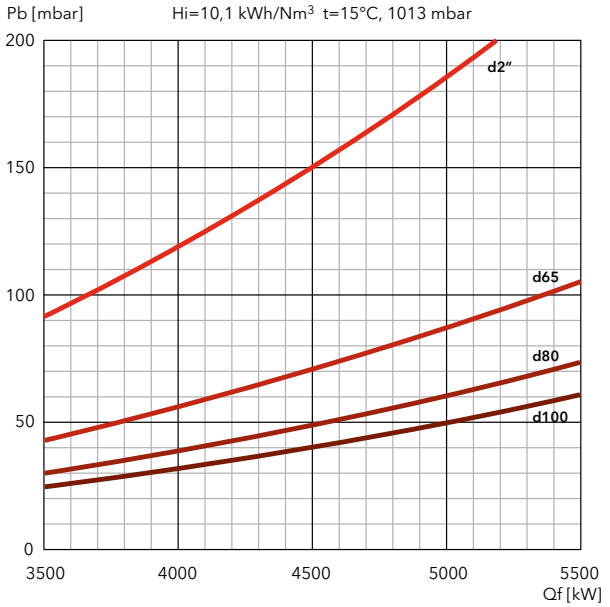

SIEMENS

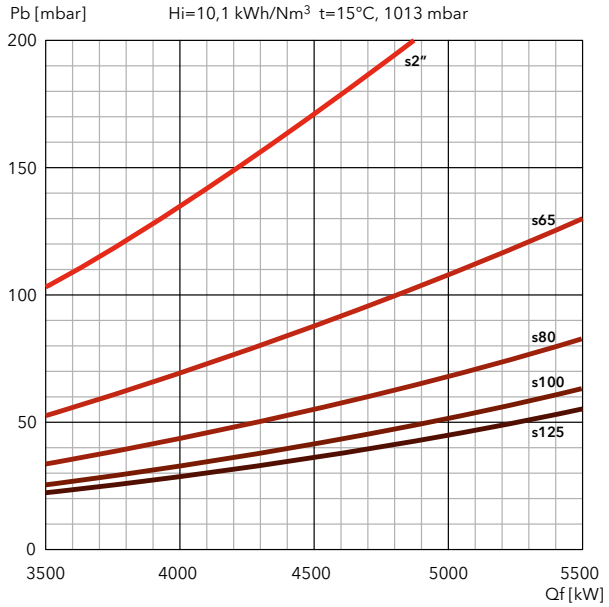

FILTERS

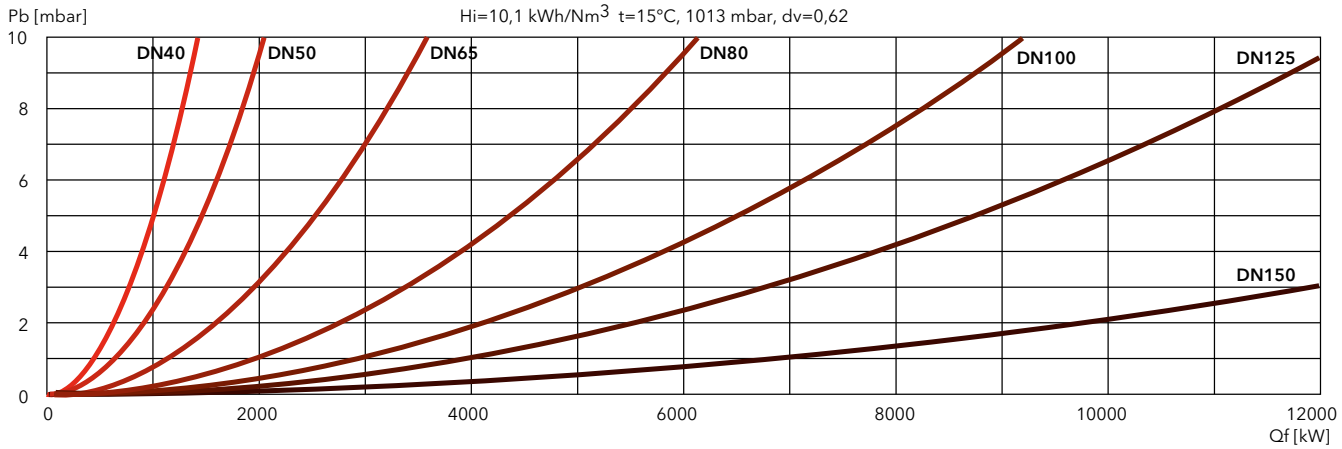

NEXTRON

GAS

Low NOx Class 2

N8 G-E / N9 G-E

740 … 11200 kW
Two stage progressive/modulating electronic

- **Fuels:** natural gas, Hi = 6,99 … 11,39 kWh/Nm³;
  LPG, Hi = 25,89 kWh/Nm³
- **Emission class:** Low NOx class 2 (≤120 mg/kWh) according to EN676
- **Modulating ratio:** 1:10
- **Protection level:** IP 41

TECHNICAL DATA

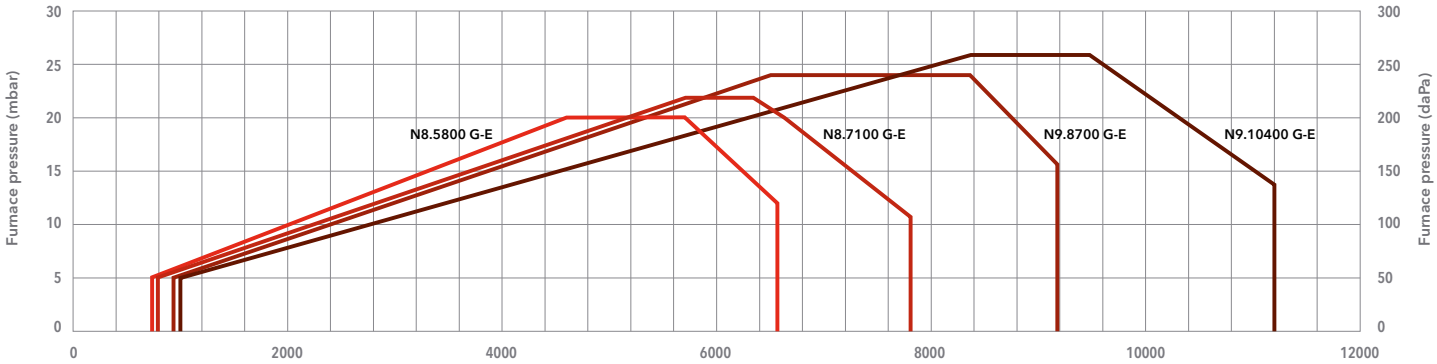

Test conditions conforming to EN676 - Temperature: 20°C - Pressure: 1013,5 mbar - Altitude: 0 m a.s.l.

Power (kW)

	N8.5800 G-E	N8.7100 G-E	N9.8700 G-E	N9.10400 G-E
Operating range	740 – 6570 kW	800 – 7800 kW	880 – 9200 kW	960 – 11200 kW
Gas pressure	60 – 500 mbar (60 – 360 mbar for d457 gas train)		70 – 500 mbar (70 – 360 mbar for d457 gas train)	
Gas connection	DN100	DN100	DN100	DN100
Control box / flame detector	BT300 / Ionisation	BT300 / Ionisation	BT300 / Ionisation	BT300 / Ionisation
Auxiliary voltage	1NPE AC 230 V – 50 Hz TN-S	1NPE AC 230 V – 50 Hz TN-S	1NPE AC 230 V – 50 Hz TN-S	1NPE AC 230 V – 50 Hz TN-S
Power supply	3PE AC 400 V – 50 Hz	3PE AC 400 V – 50 Hz	3PE AC 400 V – 50 Hz	3PE AC 400 V – 50 Hz
Fan motor	50 Hz – 11 kW	50 Hz – 15 kW	50 Hz – 18,5 kW	50 Hz – 22 kW
Acoustic level	<78 dB(A)	<78 dB(A)	<80 dB(A)	<81 dB(A)
CE certificate	0085CL0215	0085CL0215	0085CL0215	0085CL0215
Complete burner codes	**on request**	**on request**	**on request**	**on request**

GAS TRAINS

DUNGS

Model	Code
GT-d457-2" (*)	3750515
GT-d458-65	3750516
GT-d459-80	3750517
GT-d460-100	3750518

*: integrated filter

SIEMENS

Model	Code
GT-s457-2"	3750537
GT-s458-65	3750538
GT-s459-80	3750539
GT-s460-100	3750540
GT-s461-125	3750541

FILTERS

Model	Code
FG-Rp2"	3757200
FG-DN65	3757198
FG-DN80	3757201
FG-DN100	3757195
FG-DN125	3757209

i **Pressure drops graphs**: see following pages
Dimensions of gas trains and gas filters: see page 311

DIMENSIONS (mm)

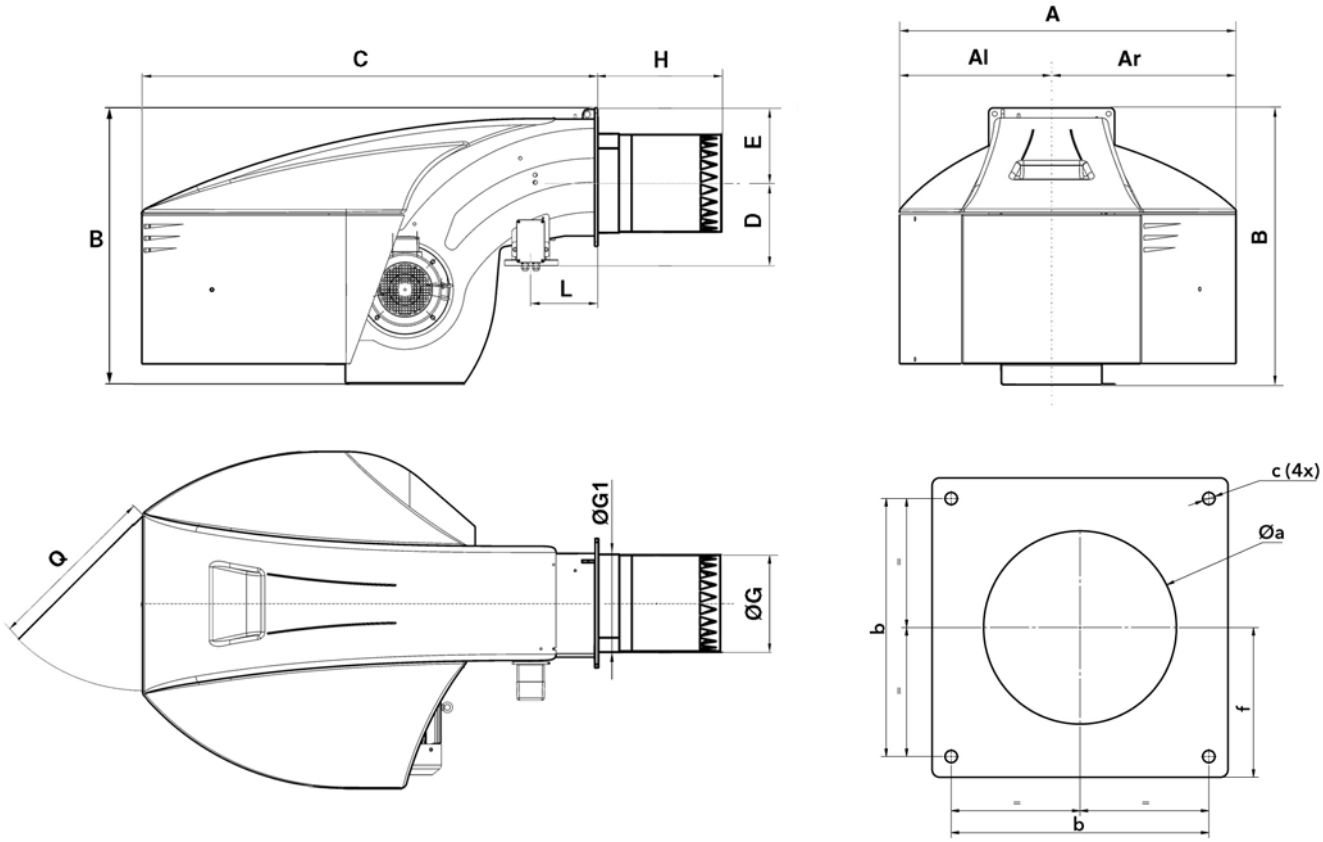

Model	A	Al	Ar	B	C	D	E	ØG	ØG1	H			L	Q
										KN	KM	KL		
N8... G-E	1414	669	745	1231	1930	344	293	369	377	500	640	780	230	800
N9... G-E	1414	669	745	1291	1930	372	293	431,5	439,5	550	700	850	230	800

Øa	b	c	f
390-410	505	M20	293
460-480	505	M20	293

PACKAGING

The burner is delivered on a pallet with:
- burner body with mounted combustion head
- gas train and filter
- boiler fixing accessories
- technical documentation

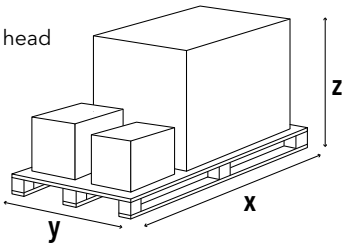

Model	Dimensions (mm)			Gross weight (kg)
	X	Y	Z	
N8.5800 G-E	2900	1600	1573	700
N8.7100 G-E	2900	1600	1573	700
N9.8700 G-E	2900	1600	1573	760
N9.10400 G-E	2900	1600	1573	760

N8 G-E / N9 G-E

740 ... 11200 kW
Two stage progressive/modulating electronic

PRESSURE LOSS [BURNER HEAD + GAS TRAIN] (mbar)

N8.5800 G-E

DUNGS

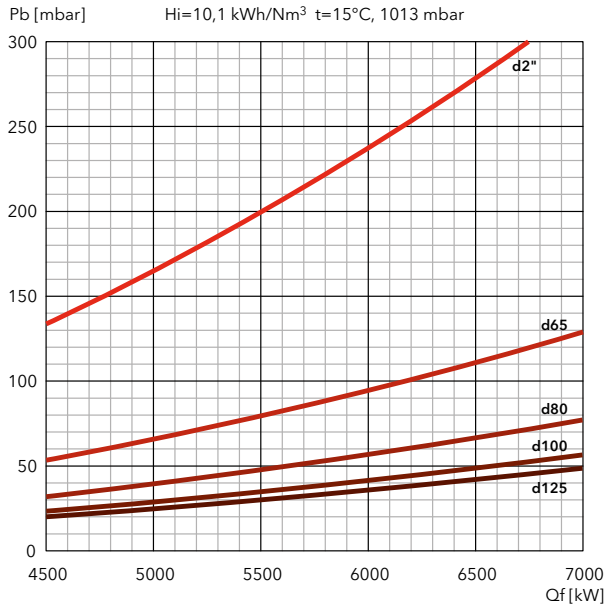

SIEMENS

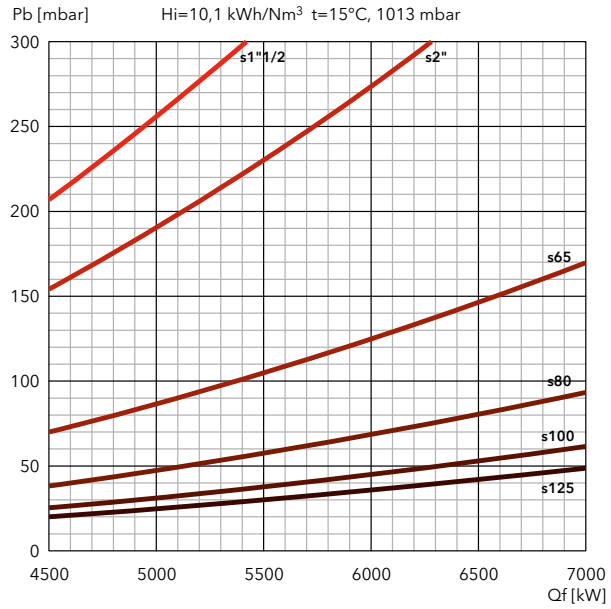

N8.7100 G-E

DUNGS

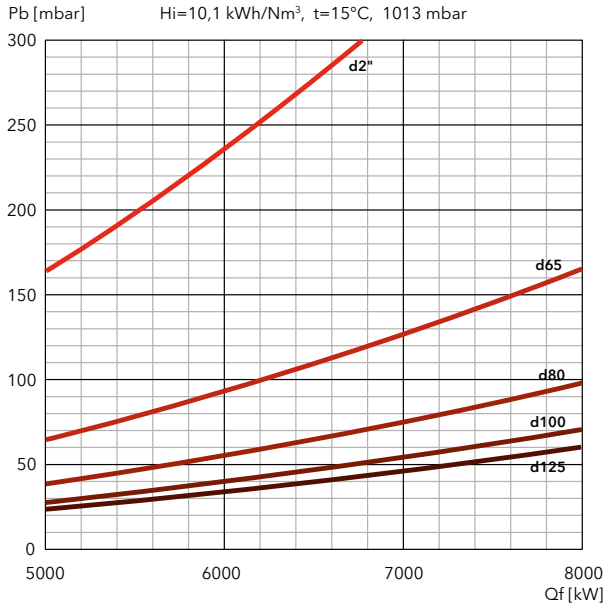

SIEMENS

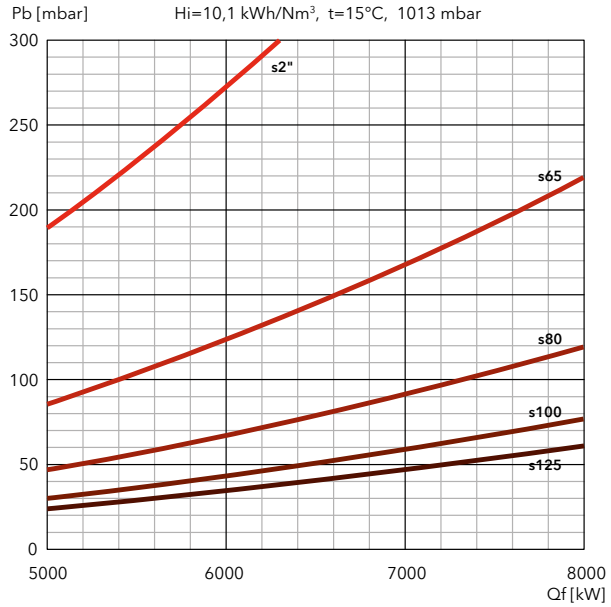

FILTERS

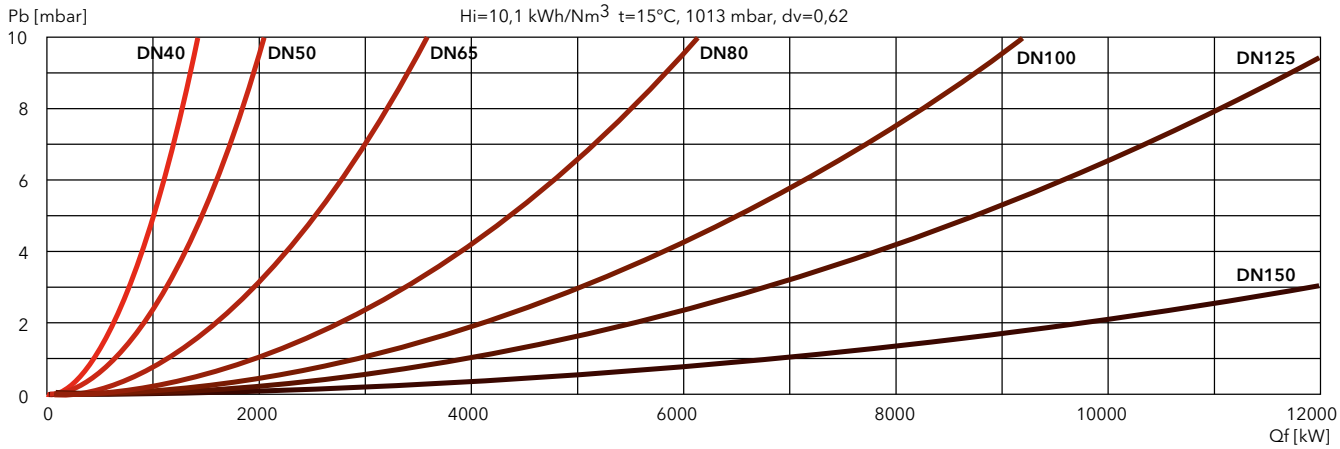

PRESSURE LOSS [BURNER HEAD + GAS TRAIN] (mbar)

N9.8700 G-E

DUNGS

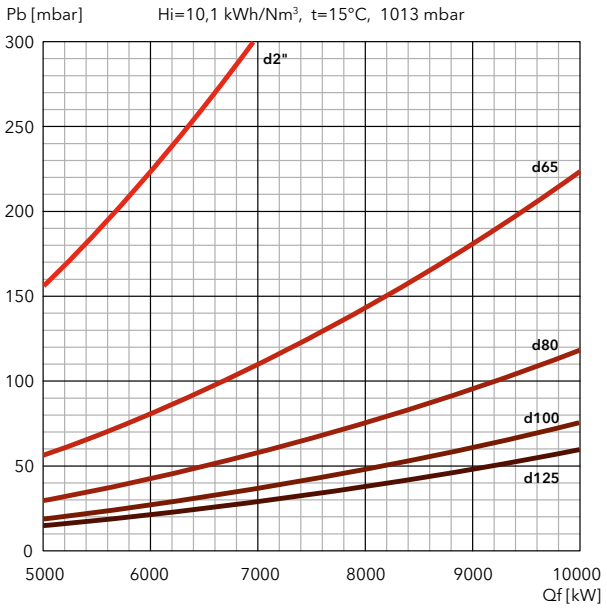

SIEMENS

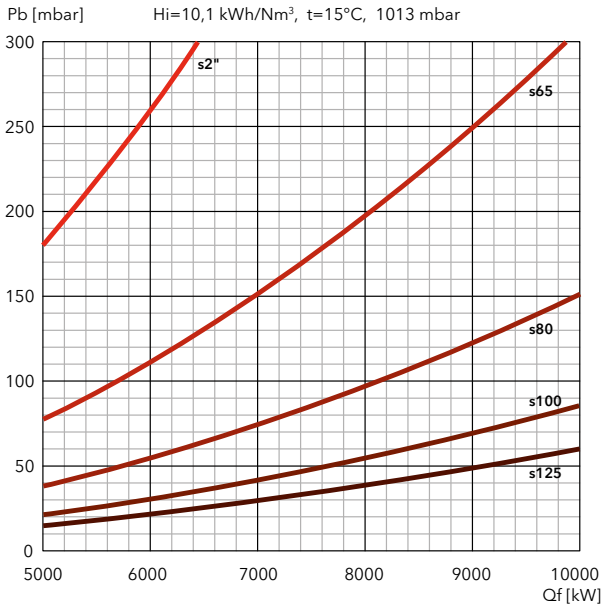

N9.10400 G-E

DUNGS

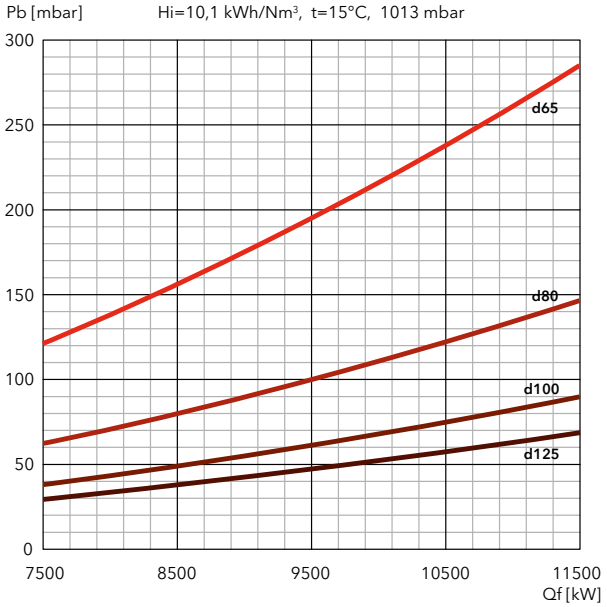

SIEMENS

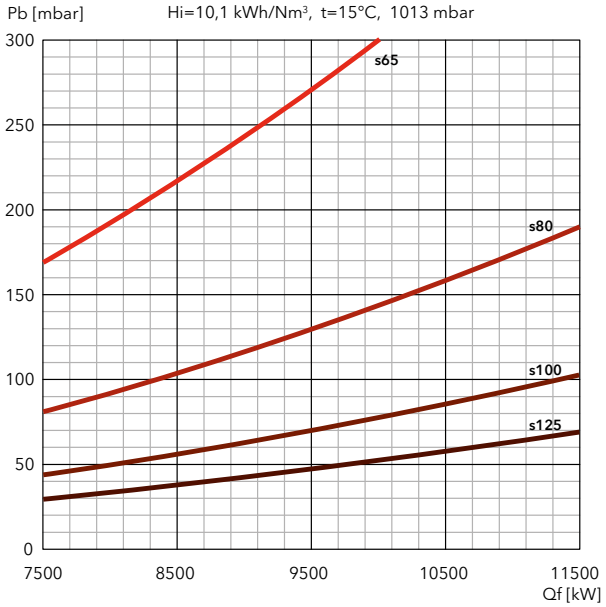

FILTERS

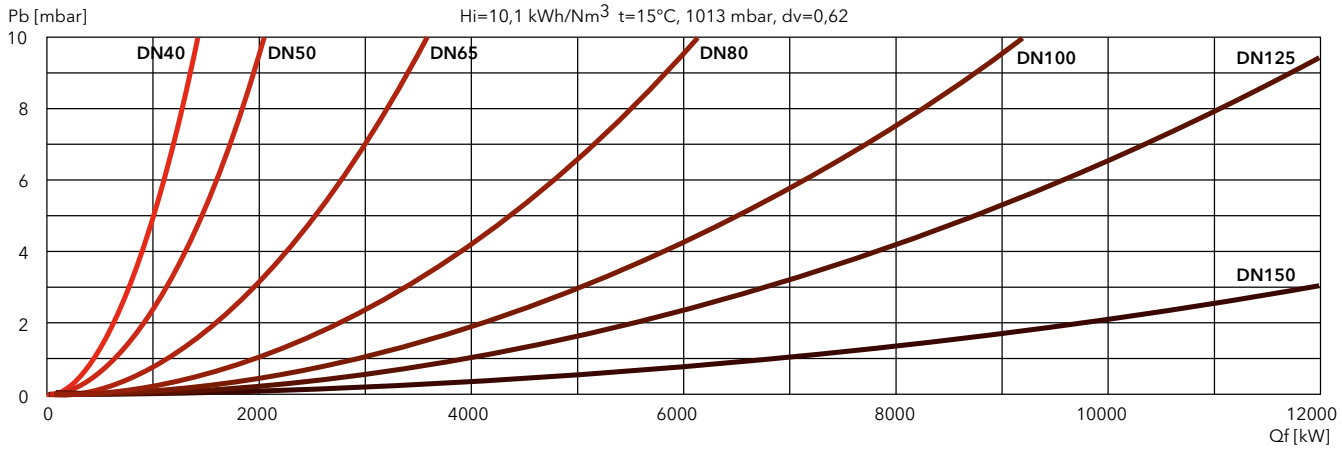

NEXTRON

GAS / LIGHT OIL

Low NOx Class 3

N6 GL-EF3 / N7 GL-EF3

280 … 4500 kW

Two stage progressive/modulating electronic in gas and in light oil

- **Fuels:** natural gas, Hi = 6,99 … 11,39 kWh/Nm³;
  light oil, viscosity 6 mm²/s at 20°C, Hi = 11,86 kWh/kg
- **Emission class:** Low NOx class 3 (≤80 mg/kWh) according to EN676 in gas
  Low NOx class 3 (≤120 mg/kWh) according to EN267 in light oil
- **Protection level:** IP 41

TECHNICAL DATA

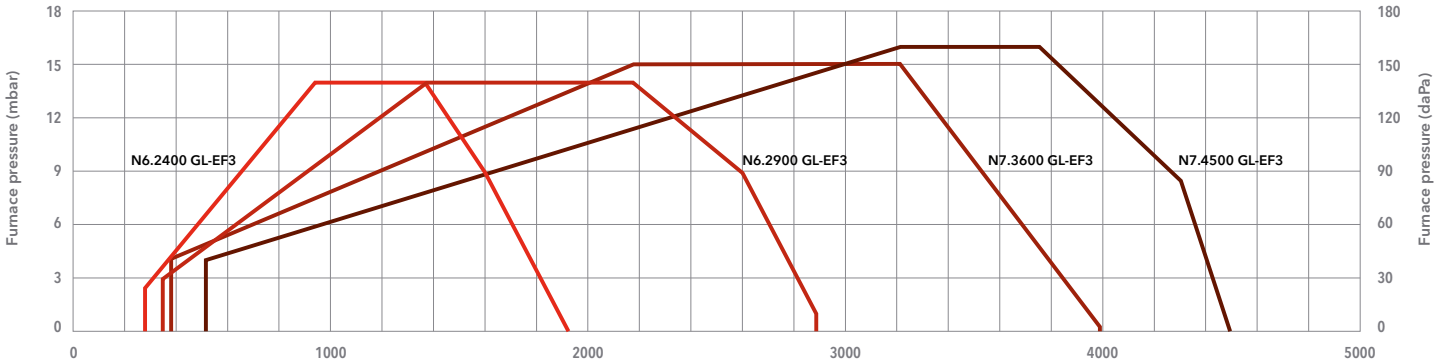

Test conditions conforming to EN676 and EN267 - Temperature: 20°C - Pressure: 1013,5 mbar - Altitude: 0 m a.s.l.

Power (kW)

	N6.2400 GL-EF3	N6.2900 GL-EF3	N7.3600 GL-EF3	N7.4500 GL-EF3
Operating range gas	280 – 1920 kW	340 – 2890 kW	470 – 3980 kW	510 – 4500 kW
Operating range oil	360 – 1920 kW	740 – 2890 kW	680 – 3980 kW	740 – 4500 kW
Gas pressure	50 – 500 mbar (50 – 360 mbar for d452 and d453 gas train)		50 – 500 mbar (50 – 360 mbar for d452 and d453 gas train)	
Gas connection	DN65	DN65	DN65	DN65
Auxiliary voltage	1NPE AC 230 V – 50 Hz TN-S	1NPE AC 230 V – 50 Hz TN-S	1NPE AC 230 V – 50 Hz TN-S	1NPE AC 230 V – 50 Hz TN-S
Power supply	3PE AC 400 V – 50 Hz	3PE AC 400 V – 50 Hz	3PE AC 400 V – 50 Hz	3PE AC 400 V – 50 Hz
Control box / flame detector	BT300 / FFS08	BT300 / FFS08	BT300 / FFS08	BT300 / FFS08
Fan motor	50 Hz – 3 kW	50 Hz – 4 kW	50 Hz – 7,5 kW	50 Hz – 7,5 kW
Pump	SUNTEC TA3	SUNTEC TA3	SUNTEC TA4	SUNTEC TA4
Motor pump	50 Hz – 0,74 kW	50 Hz – 0,74 kW	50 Hz – 1,1 kW	50 Hz – 1,5 kW
Acoustic level	<71 dB(A)	<71 dB(A)	<76 dB(A)	<74 dB(A)
CE certificate	0085CL0215	0085CL0215	0085CL0215	0085CL0215
Complete burner codes	**on request**	**on request**	**on request**	**on request**

GAS TRAINS

DUNGS

Model	Code
GT-d452-1"1/2 (*)	3750510
GT-d453-2" (*)	3750511
GT-d454-65	3750512
GT-d455-80	3750513
GT-d456-100	3750514

*: integrated filter

SIEMENS

Model	Code
GT-s451-1"1/2	3750525
GT-s452-2"	3750526
GT-s453-65	3750527
GT-s454-80	3750528
GT-s455-100	3750529
GT-s456-125	3750530

FILTERS

Model	Code
FG-Rp1"1/2	3757199
FG-Rp2"	3757200
FG-DN65	3757198
FG-DN80	3757201
FG-DN100	3757195
FG-DN125	3757209

Pressure drops graphs: see following pages
Dimensions of gas trains and gas filters: see page 310

DIMENSIONS (mm)

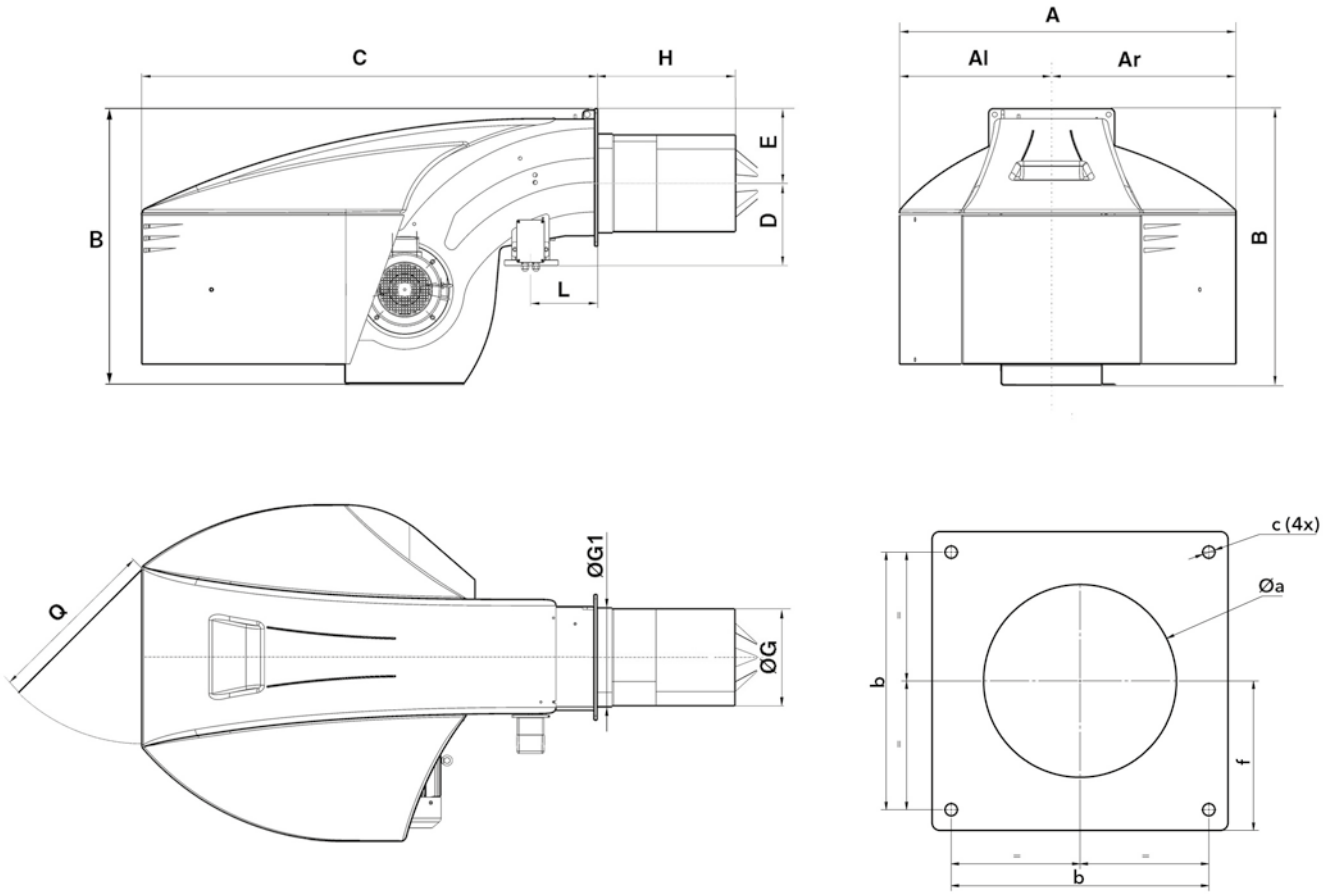

Model	A	Al	Ar	B	C	D	E	ØG	ØG1	H			L	Q
										KN	KM	KL		
N6.2400 GL-EF3	989	479	510	837	1361	245	225	227	270	400	520	640	215	600
N6.2900 GL-EF3	989	479	510	837	1361	245	225	263,5	270	400	520	640	215	600
N7.3600 GL-EF3	1128	510	618	961	1529	276	255	325	332	420	550	680	225	600
N7.4500 GL-EF3	1128	510	618	961	1529	276	255	325	332	420	550	680	225	600

Øa	b	c	f
300-340	340	M16	200
300-340	340	M16	200
360-400	400	M16	235
360-400	400	M16	235

PACKAGING

The burner is delivered on a pallet with:
- burner body with mounted combustion head
- gas train and filter
- boiler fixing accessories
- technical documentation

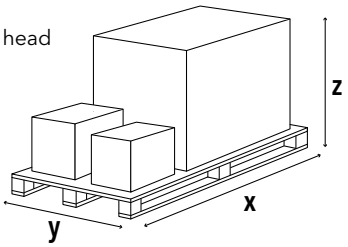

Model	Dimensions (mm)			Gross weight (kg)
	X	Y	Z	
N6.2400 GL-EF3	2300	1500	1573	360
N6.2900 GL-EF3	2300	1500	1573	360
N7.3600 GL-EF3	2300	1500	1573	450
N7.4500 GL-EF3	2300	1500	1573	450

N6 GL-EF3 / N7 GL-EF3

280 ... 4500 kW
Two stage progressive/modulating electronic in gas and in light oil

PRESSURE LOSS [BURNER HEAD + GAS TRAIN] (mbar)

N6.2400 GL-EF3

DUNGS

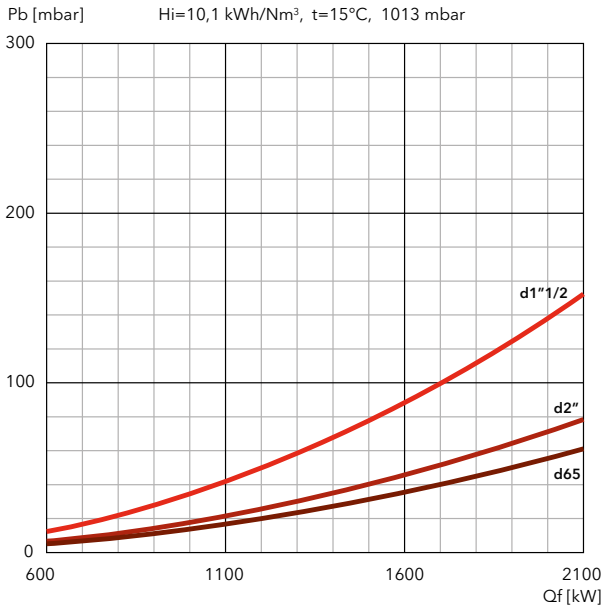

SIEMENS

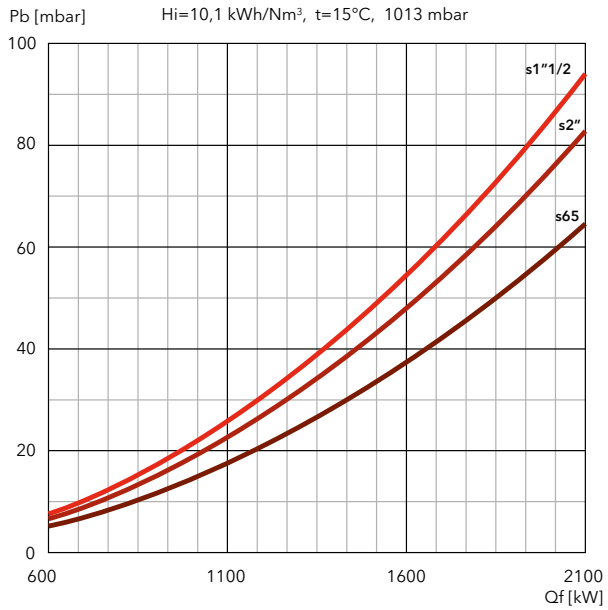

N6.2900 GL-EF3

DUNGS

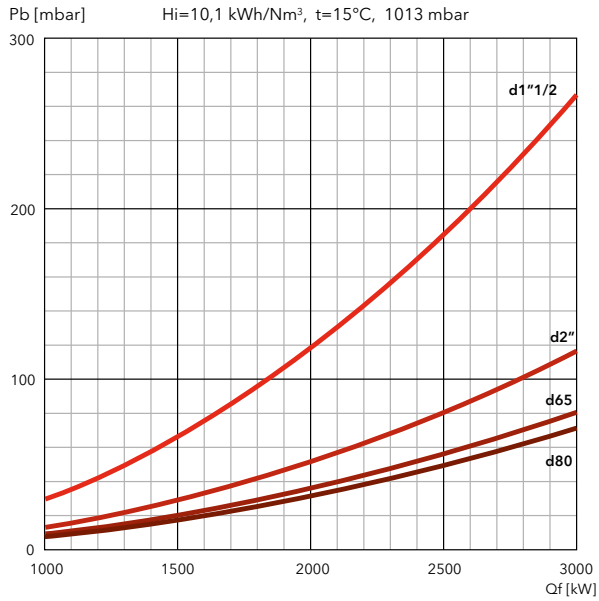

SIEMENS

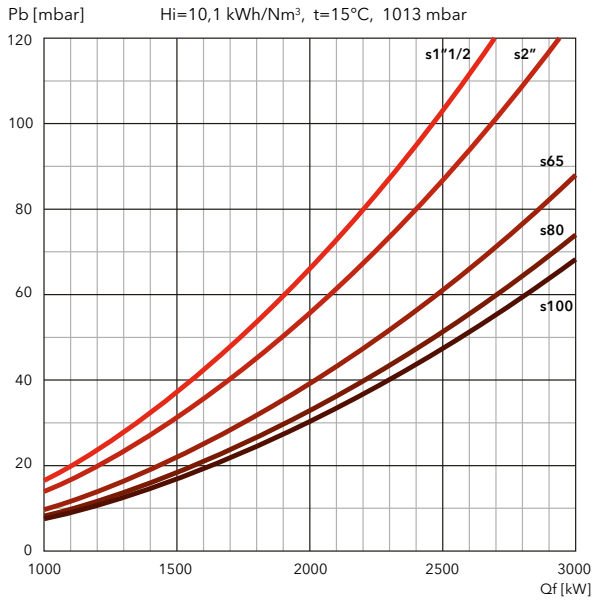

FILTERS

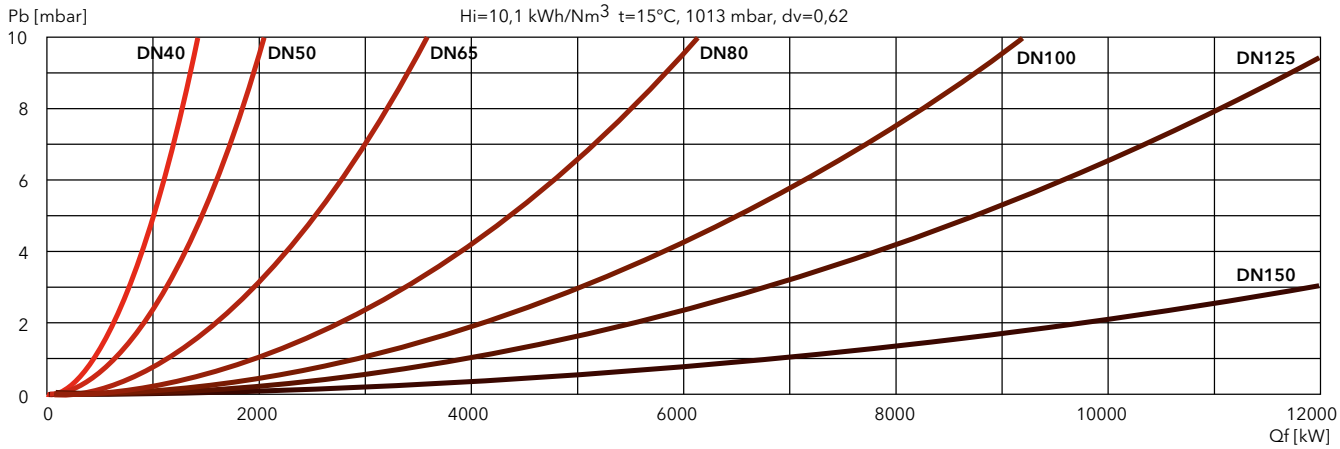

PRESSURE LOSS [BURNER HEAD + GAS TRAIN] (mbar)

N7.3600 GL-EF3

DUNGS

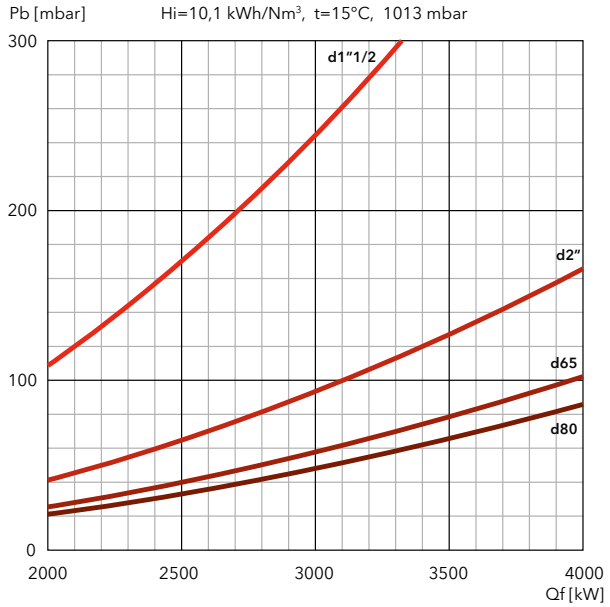

SIEMENS

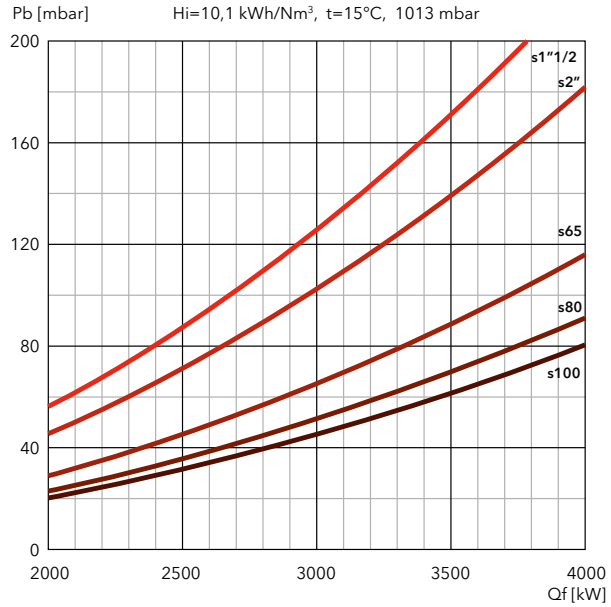

N7.4500 GL-EF3

DUNGS

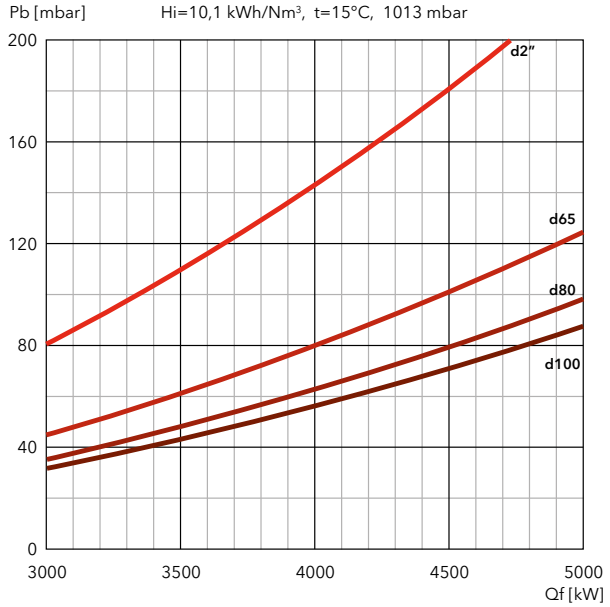

SIEMENS

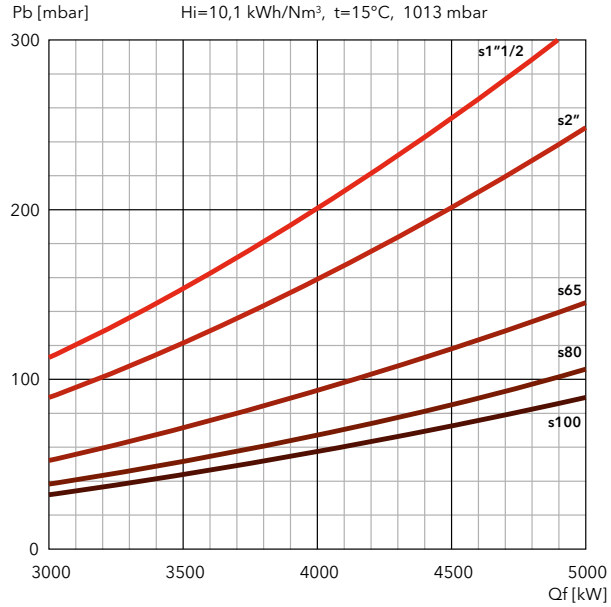

FILTERS

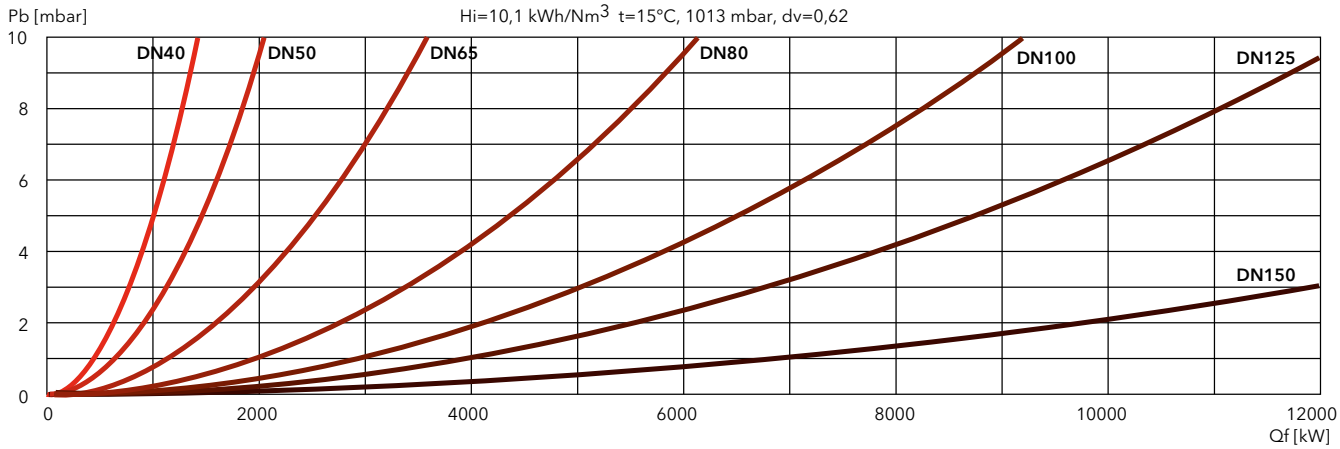

NEXTRON

GAS / LIGHT OIL

Low NOx Class 3

N8 GL-EF3 / N9 GL-EF3 / N9 GL-EUF

830 … 9570 kW

Two stage progressive/modulating electronic in gas and in light oil

- **Fuels:** natural gas, Hi = 6,99 … 11,39 kWh/Nm³;
  light oil, viscosity 6 mm²/s at 20°C, Hi = 11,86 kWh/kg
- **Emission class:** Low NOx class 3 (≤80 mg/kWh) according to EN676 in gas
  Low NOx class 3 (≤120 mg/kWh) according to EN267 in light oil
- **Protection level:** IP 41

TECHNICAL DATA

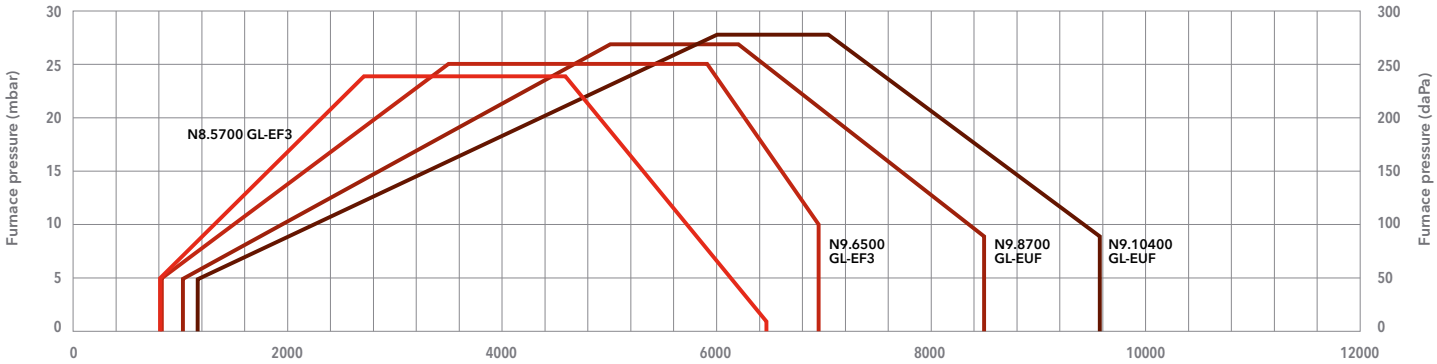

Test conditions conforming to EN676 and EN267 - Temperature: 20°C - Pressure: 1013,5 mbar - Altitude: 0 m a.s.l.

Power (kW)

	N8.5700 GL-EF3	N9.6500 GL-EF3	N9.8700 GL-EUF	N9.10400 GL-EUF
Operating range gas	830 – 6450 kW	830 – 6950 kW	1040 – 8500 kW	1160 – 9570 kW
Operating range oil	1030 – 6450 kW	1030 – 6600 kW	1800 – 8500 kW	2550 – 9570 kW
Gas pressure	100 – 500 mbar (100 – 360 mbar for d457 gas train)		100 – 500 mbar (100 – 360 mbar for d457 gas train)	
Gas connection	DN100	DN100	DN100	DN100
Auxiliary voltage	1NPE AC 230 V – 50 Hz TN-S	1NPE AC 230 V – 50 Hz TN-S	1NPE AC 230 V – 50 Hz TN-S	1NPE AC 230 V – 50 Hz TN-S
Power supply	3PE AC 400 V – 50 Hz	3PE AC 400 V – 50 Hz	3PE AC 400 V – 50 Hz	3PE AC 400 V – 50 Hz
Control box / flame detector	BT300 / FFS08	BT300 / FFS08	BT300 / FFS08	BT300 / FFS08
Fan motor	50 Hz – 15 kW	50 Hz – 22 kW	50 Hz – 18,5 kW	50 Hz – 22 kW
Pump	SMG1630 – 1700 l/h	SMG1630 – 1700 l/h	SMG1630 – 1700 l/h	SMG1631 – 2200 l/h
Motor pump	50 Hz – 3 kW	50 Hz – 3 kW	50 Hz – 3 kW	50 Hz – 4 kW
Acoustic level	<80 dB(A)	<83 dB(A)	<81 dB(A)	<81,7 dB(A)
CE certificate	0085CL0215	0085CL0215	0085CL0215	0085CL0215
Complete burner codes	on request	on request	on request	on request

GAS TRAINS

DUNGS

Model	Code
GT-d457-2" (*)	3750515
GT-d458-65	3750516
GT-d459-80	3750517
GT-d460-100	3750518

*: integrated filter

SIEMENS

Model	Code
GT-s457-2"	3750537
GT-s458-65	3750538
GT-s459-80	3750539
GT-s460-100	3750540
GT-s461-125	3750541

FILTERS

Model	Code
FG-Rp2"	3757200
FG-DN65	3757198
FG-DN80	3757201
FG-DN100	3757195
FG-DN125	3757209

Pressure drops graphs: see following pages
Dimensions of gas trains and gas filters: see page 311

DIMENSIONS (mm)

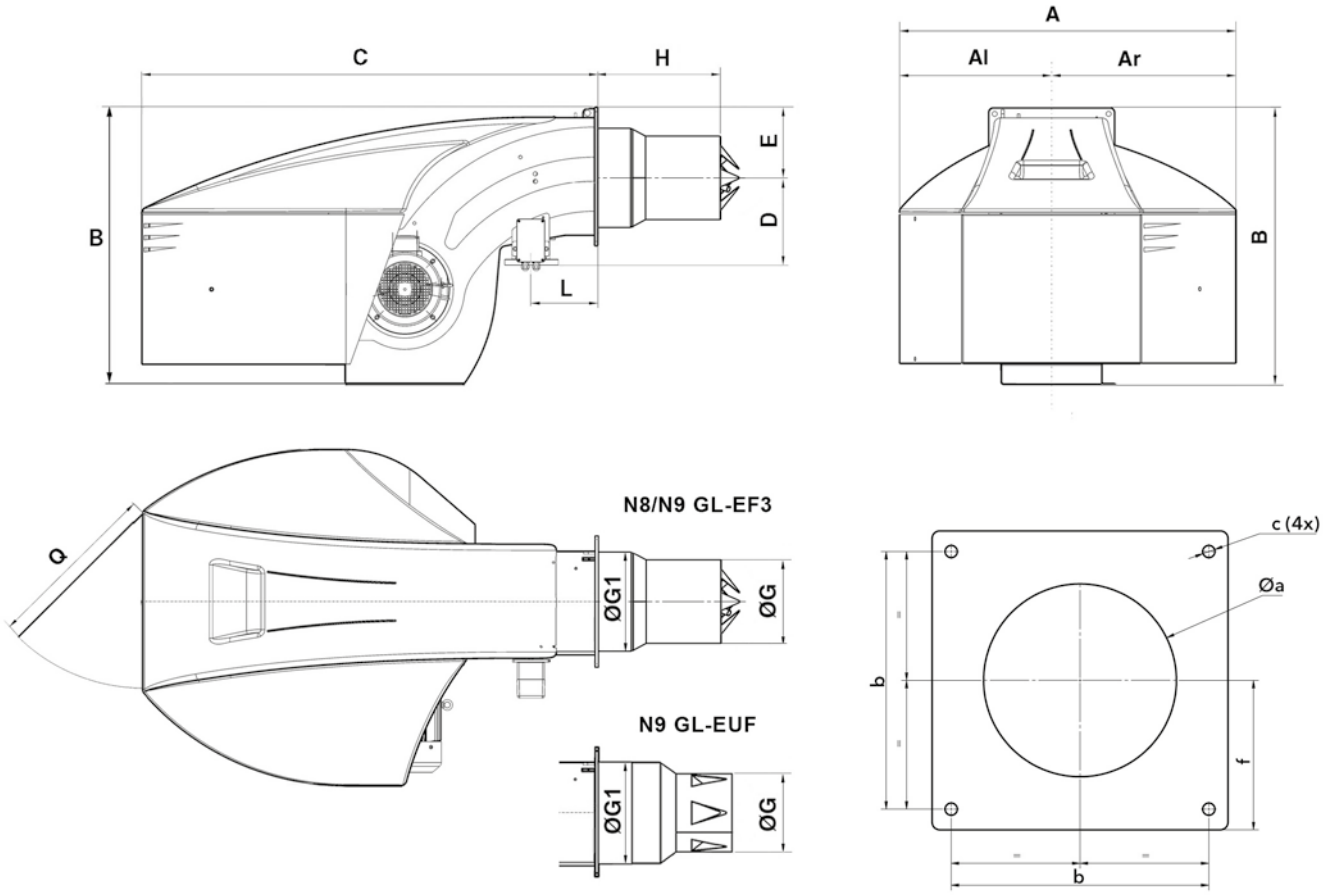

Model	A	Al	Ar	B	C	D	E	ØG	ØG1	H			L	Q	Øa	b	c	f
										KN	KM	KL						
N8.5700 GL-EF3	1414	669	745	1231	1930	391	293	369	376	528	668	808	230	800	380-410	505	M20	293
N9.6500 GL-EF3	1414	669	745	1291	1930	416	293	369	438,5	543	693	843	230	800	445-480	505	M20	293
N9.8700 GL-EUF	1414	669	745	1291	1930	416	293	325	438,5	575	725	875	230	800	445-480	505	M20	293
N9.10400 GL-EUF	1414	669	745	1291	1930	416	293	335	438,5	575	725	875	230	800	445-480	505	M20	293

PACKAGING

The burner is delivered on a pallet with:
- burner body with mounted combustion head
- gas train and filter
- boiler fixing accessories
- technical documentation

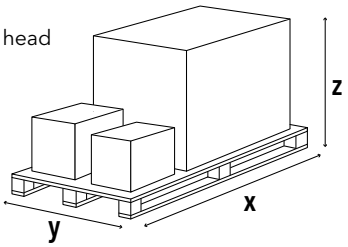

Model	Dimensions (mm)			Gross weight (kg)
	X	Y	Z	
N8.5700 GL-EF3	2900	1600	1573	700
N9.6500 GL-EF3	2900	1600	1573	760
N9.8700 GL-EUF	2900	1600	1573	760
N9.10400 GL-EUF	2900	1600	1573	760

NEXTRON

GAS / LIGHT OIL

Low NOx Class 3

N8 GL-EF3 / N9 GL-EF3 / N9 GL-EUF

830 ... 9570 kW

Two stage progressive/modulating electronic in gas and in light oil

PRESSURE LOSS [BURNER HEAD + GAS TRAIN] (mbar)

N8.5700 GL-EF3

DUNGS

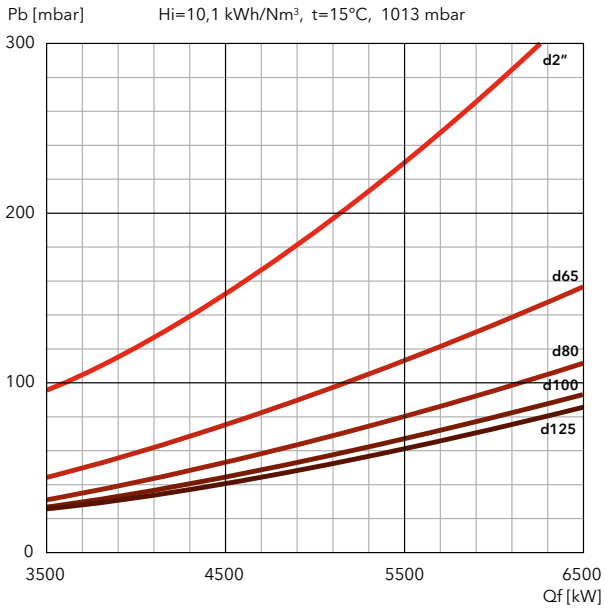

SIEMENS

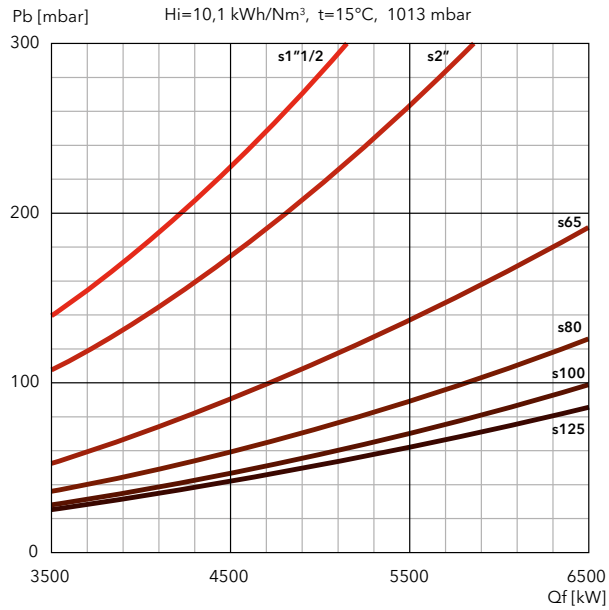

N9.6500 GL-EF3

DUNGS

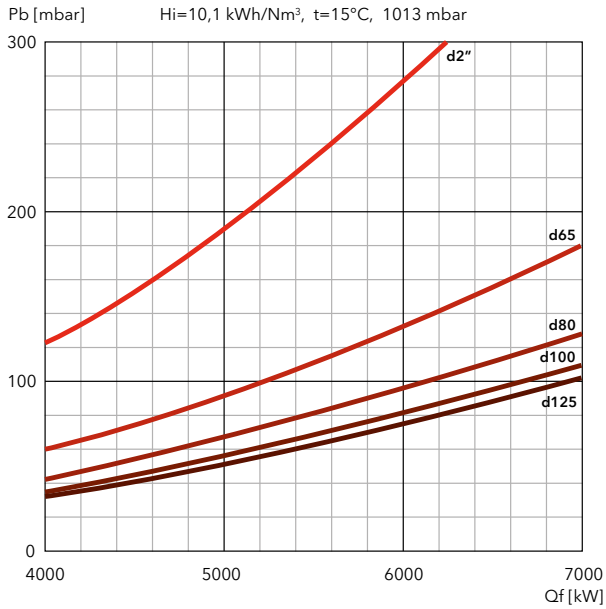

SIEMENS

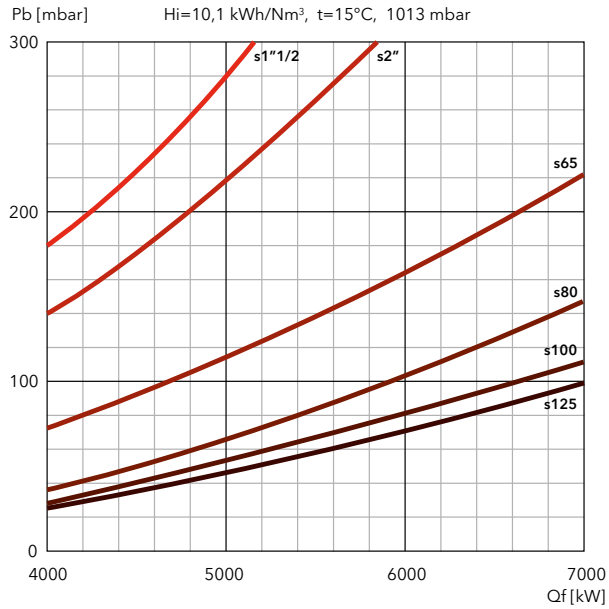

FILTERS

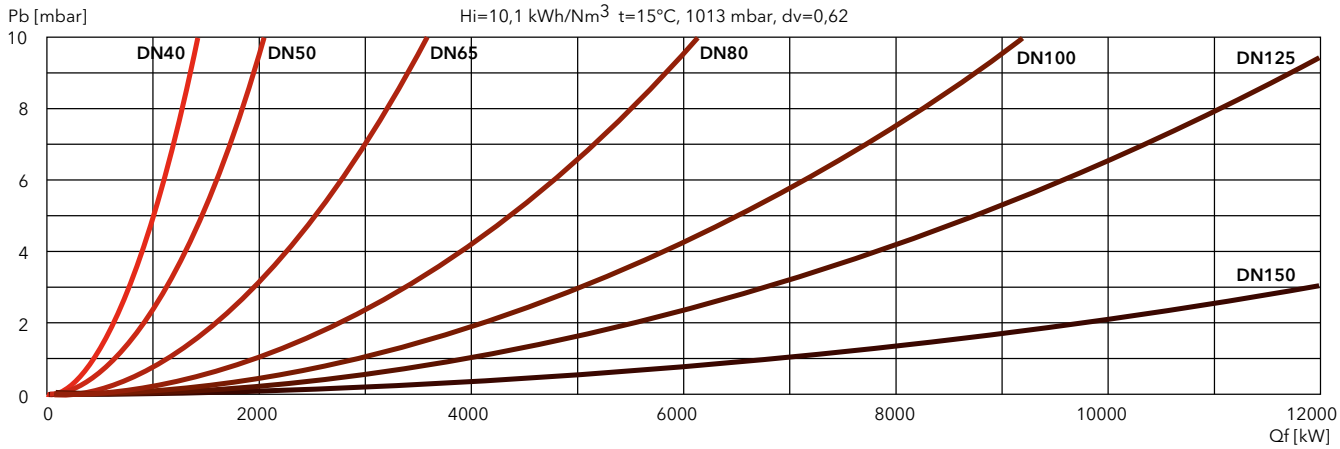

PRESSURE LOSS [BURNER HEAD + GAS TRAIN] (mbar)

N9.8700 GL-EUF

DUNGS

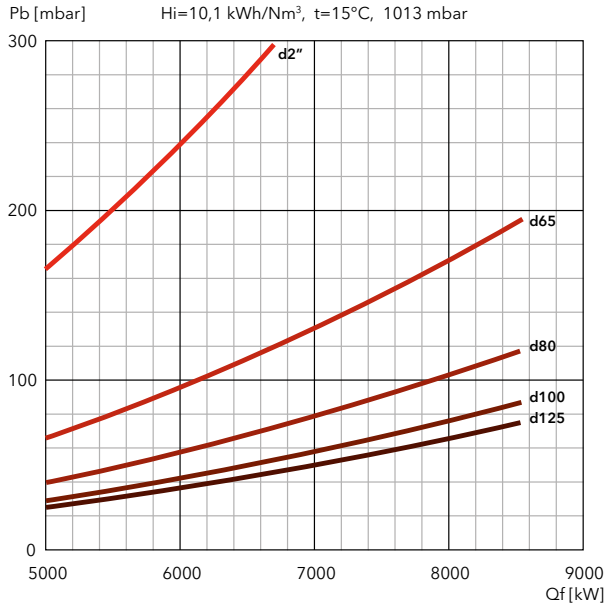

SIEMENS

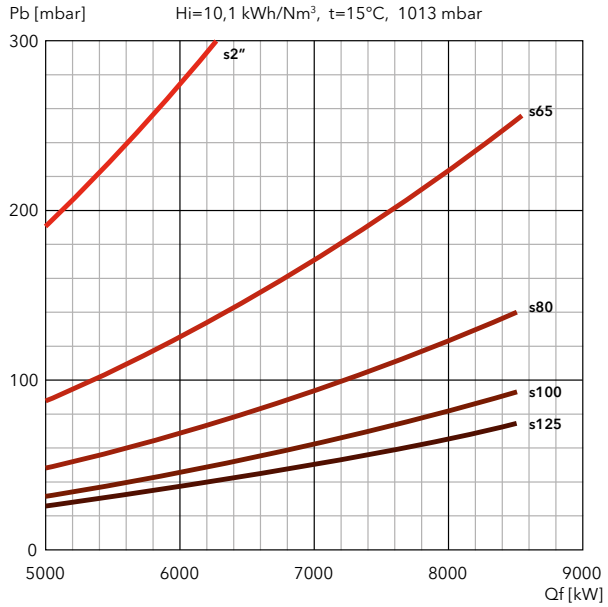

N9.10400 GL-EUF

DUNGS

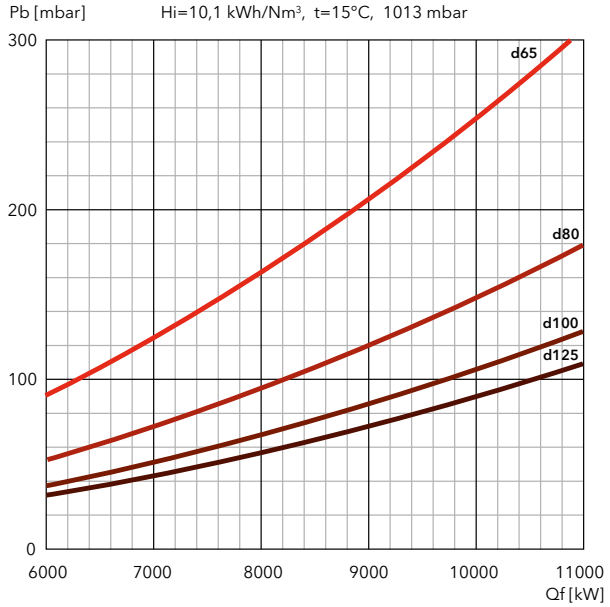

SIEMENS

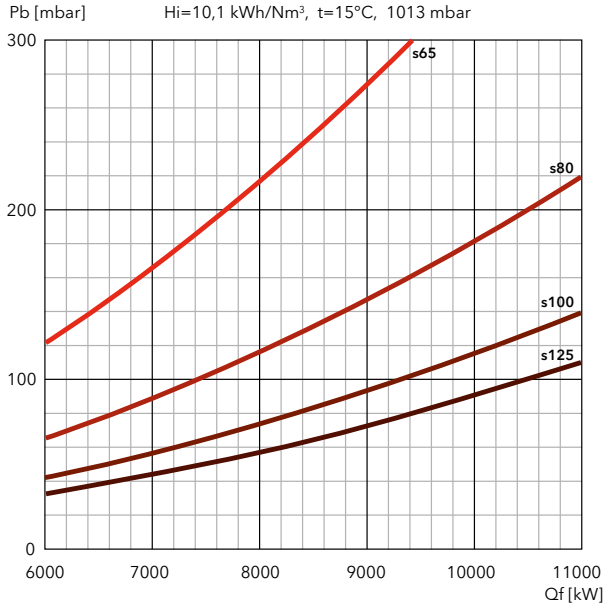

FILTERS

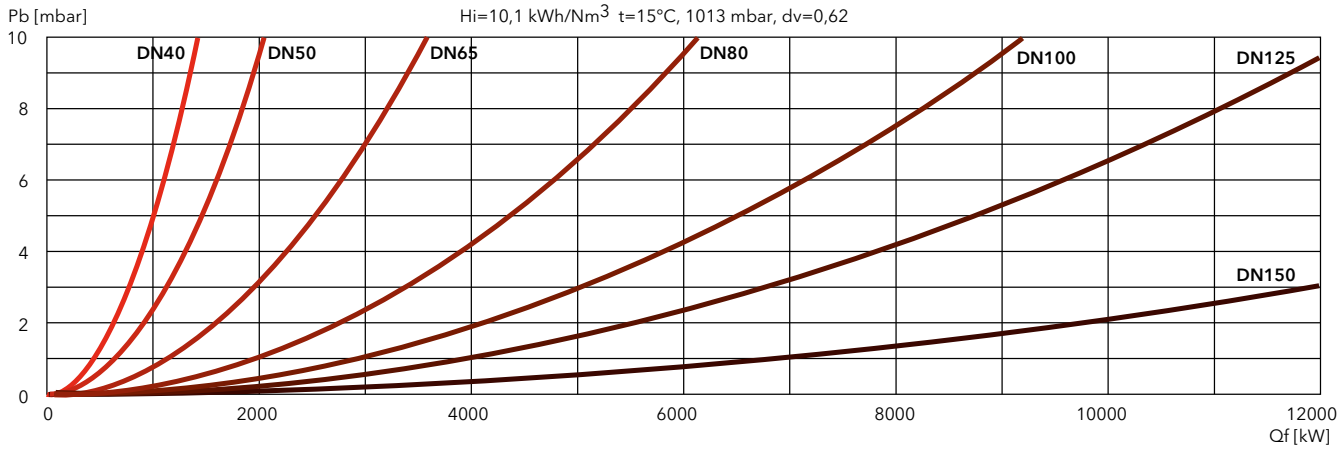

NEXTRON

GAS / LIGHT OIL

Low NOx Class 2

N6 GL-E / N7 GL-E

250 … 4750 kW

Two stage progressive/modulating electronic in gas and in light oil

- **Fuels:** natural gas, Hi = 6,99 … 11,39 kWh/Nm³;
  light oil, viscosity 6 mm²/s at 20°C, Hi = 11,86 kWh/kg
- **Emission class:** Low NOx class 2 (≤120 mg/kWh) according to EN676 in gas
  Low NOx class 2 (≤185 mg/kWh) according to EN267 in light oil
- **Protection level:** IP 41

TECHNICAL DATA

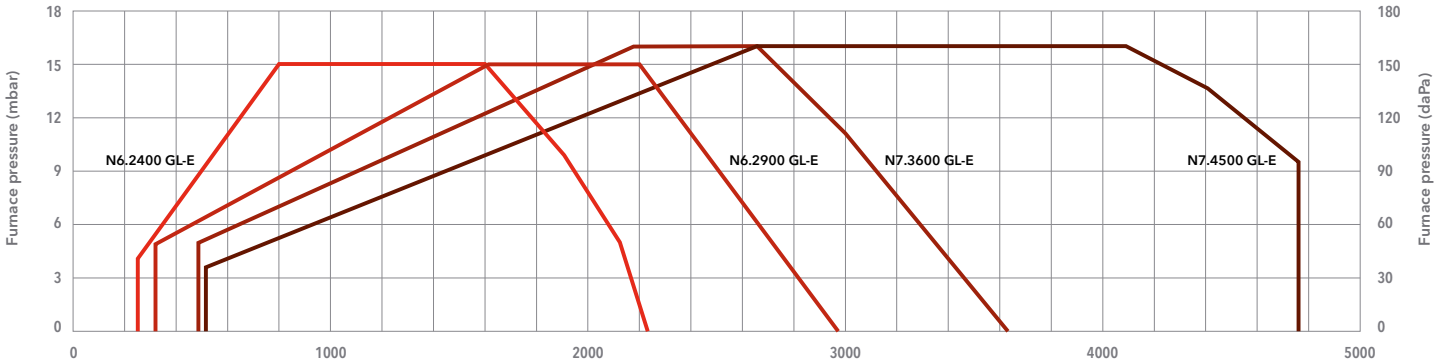

Test conditions conforming to EN676 and EN267 - Temperature: 20°C - Pressure: 1013,5 mbar - Altitude: 0 m a.s.l.

	N6.2400 GL-E	N6.2900 GL-E	N7.3600 GL-E	N7.4500 GL-E
Operating range gas	250 – 2230 kW	320 – 2970 kW	490 – 3650 kW	510 – 4750 kW
Operating range oil	510 – 2030 kW	650 – 2970 kW	900 – 3650 kW	1300 – 4750 kW
Gas pressure	50 – 500 mbar (50 – 360 mbar for d452 and d453 gas train)		50 – 500 mbar (50 – 360 mbar for d452 and d453 gas train)	
Gas connection	DN65	DN65	DN65	DN65
Auxiliary voltage	1NPE AC 230 V – 50 Hz TN-S	1NPE AC 230 V – 50 Hz TN-S	1NPE AC 230 V – 50 Hz TN-S	1NPE AC 230 V – 50 Hz TN-S
Power supply	3PE AC 400 V – 50 Hz	3PE AC 400 V – 50 Hz	3PE AC 400 V – 50 Hz	3PE AC 400 V – 50 Hz
Control box / flame detector	BT300 / QRA2	BT300 / QRA2	BT300 / QRA2	BT300 / QRA2
Fan motor	50 Hz – 3 kW	50 Hz – 4 kW	50 Hz – 5,5 kW	50 Hz – 7,5 kW
Pump	SUNTEC TA3	SUNTEC TA3	SUNTEC TA4	SUNTEC TA4
Motor pump	50 Hz – 0,74 kW	50 Hz – 0,74 kW	50 Hz – 1,1 kW	50 Hz – 1,5 kW
Acoustic level	<70 dB(A)	<71 dB(A)	<74 dB(A)	<74 dB(A)
CE certificate	0085CL0215	0085CL0215	0085CL0215	0085CL0215
Complete burner codes	**on request**	**on request**	**on request**	**on request**

GAS TRAINS

DUNGS

Model	Code
GT-d452-1"1/2 (*)	3750510
GT-d453-2" (*)	3750511
GT-d454-65	3750512
GT-d455-80	3750513
GT-d456-100	3750514

*: integrated filter

SIEMENS

Model	Code
GT-s451-1"1/2	3750525
GT-s452-2"	3750526
GT-s453-65	3750527
GT-s454-80	3750528
GT-s455-100	3750529
GT-s456-125	3750530

FILTERS

Model	Code
FG-Rp1"1/2	3757199
FG-Rp2"	3757200
FG-DN65	3757198
FG-DN80	3757201
FG-DN100	3757195
FG-DN125	3757209

Pressure drops graphs: see following pages
Dimensions of gas trains and gas filters: see page 310

DIMENSIONS (mm)

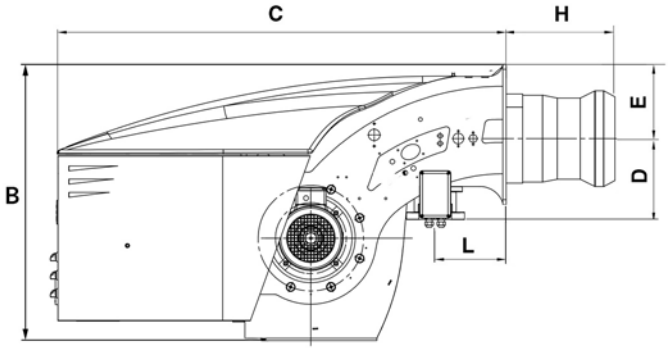

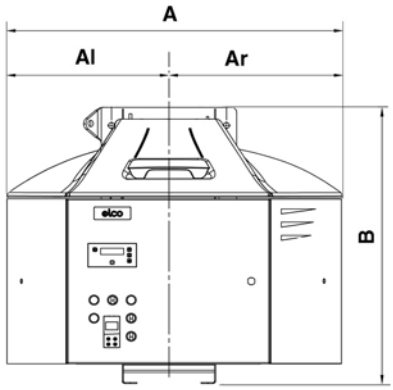

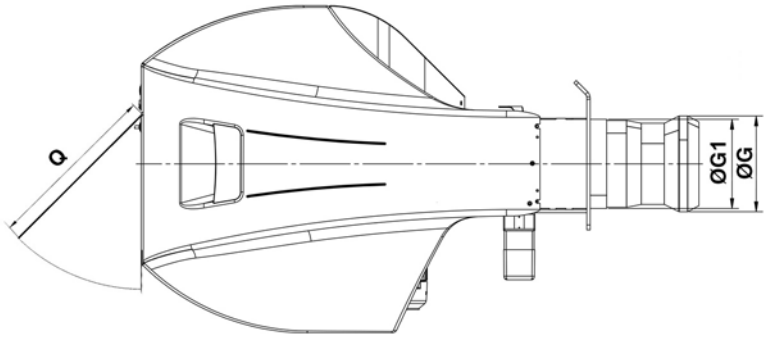

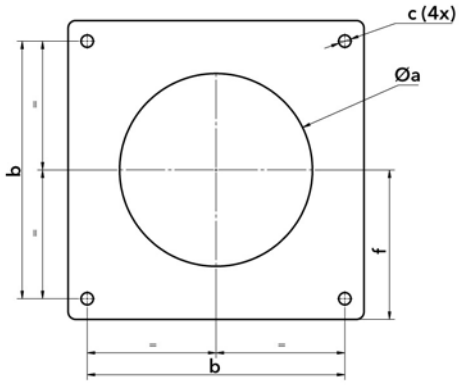

Model	A	Al	Ar	B	C	D	E	ØG	ØG1	H			L	Q
										KN	KM	KL		
N6.2400 GL-E	989	479	510	837	1369	245	225	290	270	330	450	570	215	600
N6.2900 GL-E	989	479	510	837	1369	245	225	310	270	330	450	570	215	600
N7.3600 GL-E	1128	510	618	961	1529	276	255	340	332	375	505	635	225	600
N7.4500 GL-E	1128	510	618	961	1537	276	255	370	332	375	505	635	225	600

Øa	b	c	f
300-340	340	M16	200
320-340	340	M16	200
350-400	400	M16	235
380-400	400	M16	235

PACKAGING

The burner is delivered on a pallet with:
- burner body with mounted combustion head
- gas train and filter
- boiler fixing accessories
- technical documentation

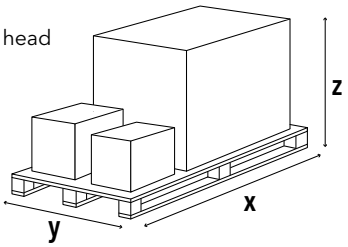

Model	Dimensions (mm)			Gross weight (kg)
	X	Y	Z	
N6.2400 GL-E	2300	1500	1573	360
N6.2900 GL-E	2300	1500	1573	360
N7.3600 GL-E	2300	1500	1573	450
N7.4500 GL-E	2300	1500	1573	450

N6 GL-E / N7 GL-E

250 ... 4750 kW
Two stage progressive/modulating electronic in gas and in light oil

PRESSURE LOSS [BURNER HEAD + GAS TRAIN] (mbar)

N6.2400 GL-E

DUNGS

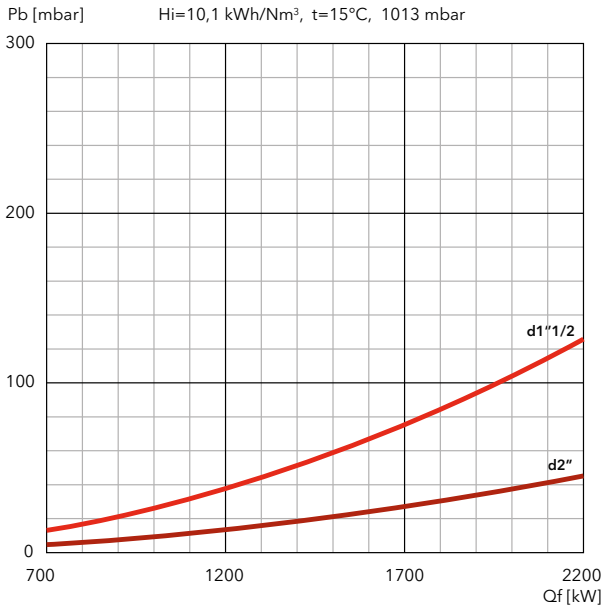

SIEMENS

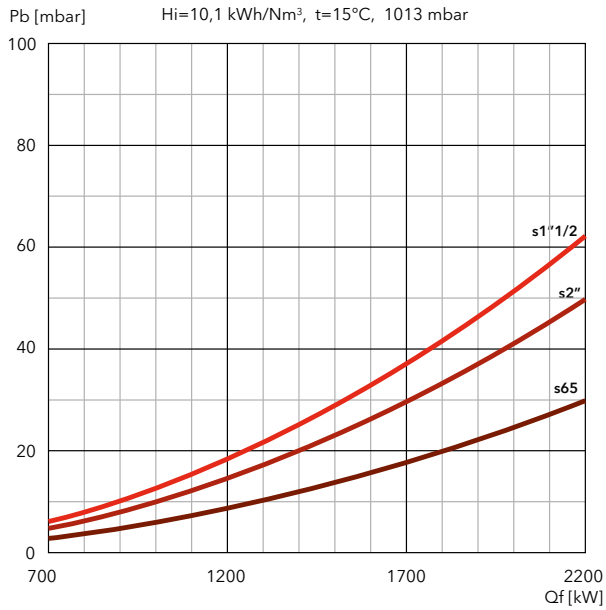

N6.2900 GL-E

DUNGS

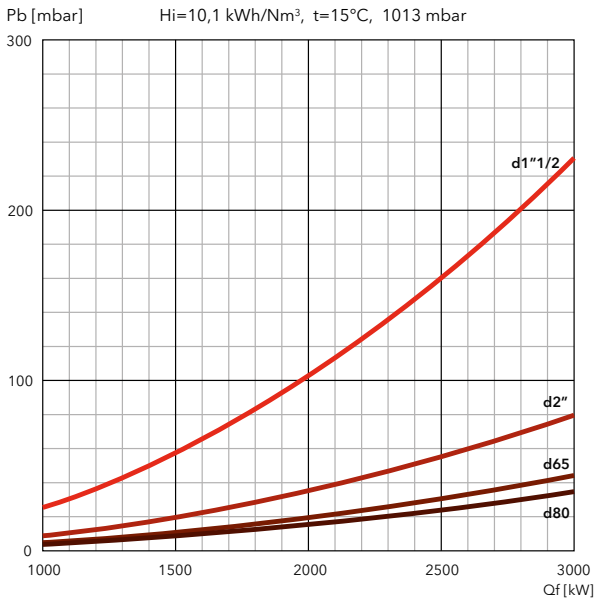

SIEMENS

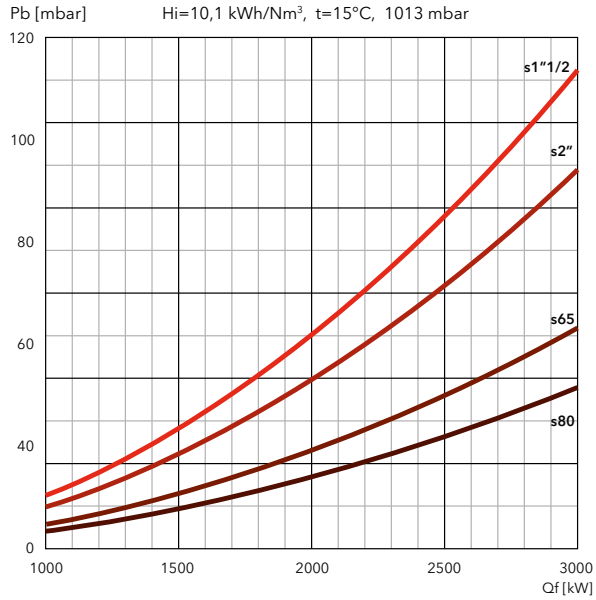

FILTERS

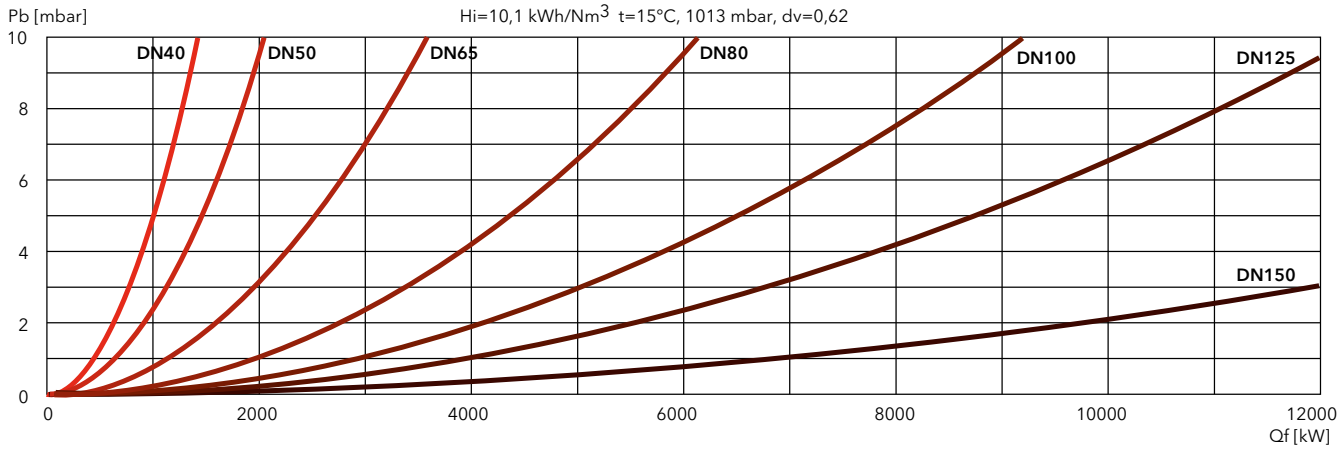

PRESSURE LOSS [BURNER HEAD + GAS TRAIN] (mbar)

N7.3600 GL-E

DUNGS

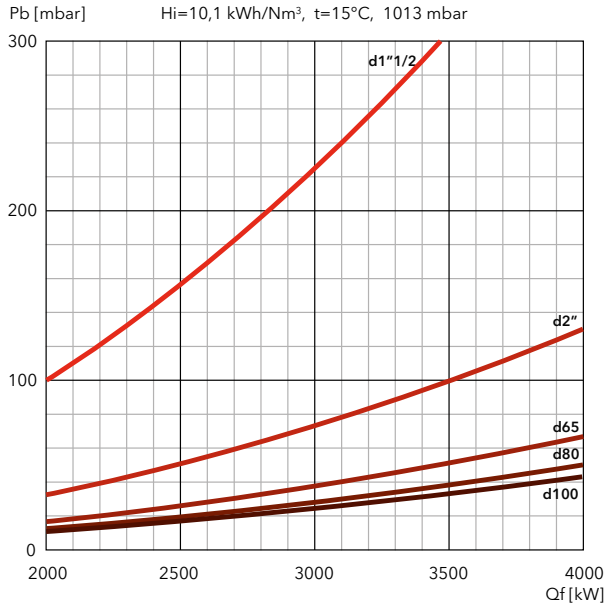

SIEMENS

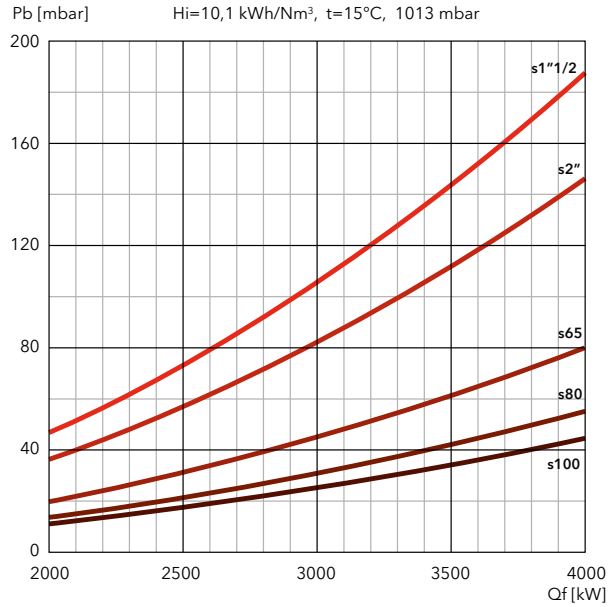

N7.4500 GL-E

DUNGS

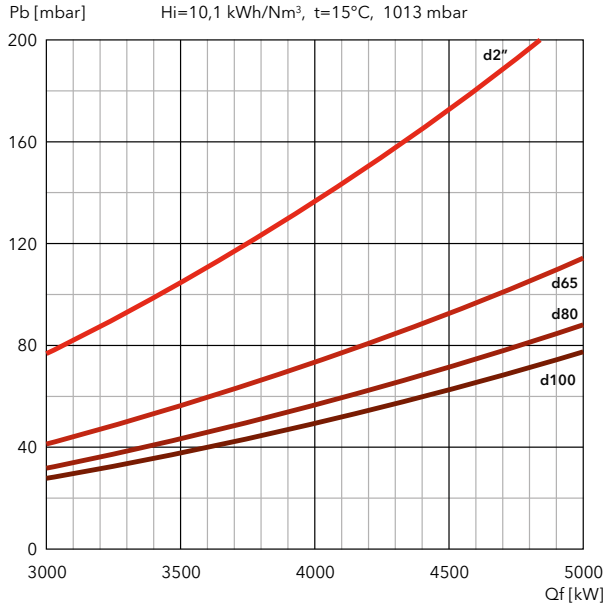

SIEMENS

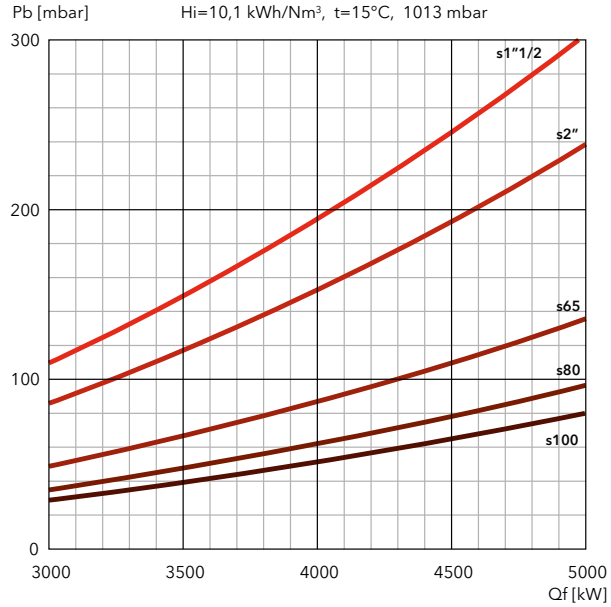

FILTERS

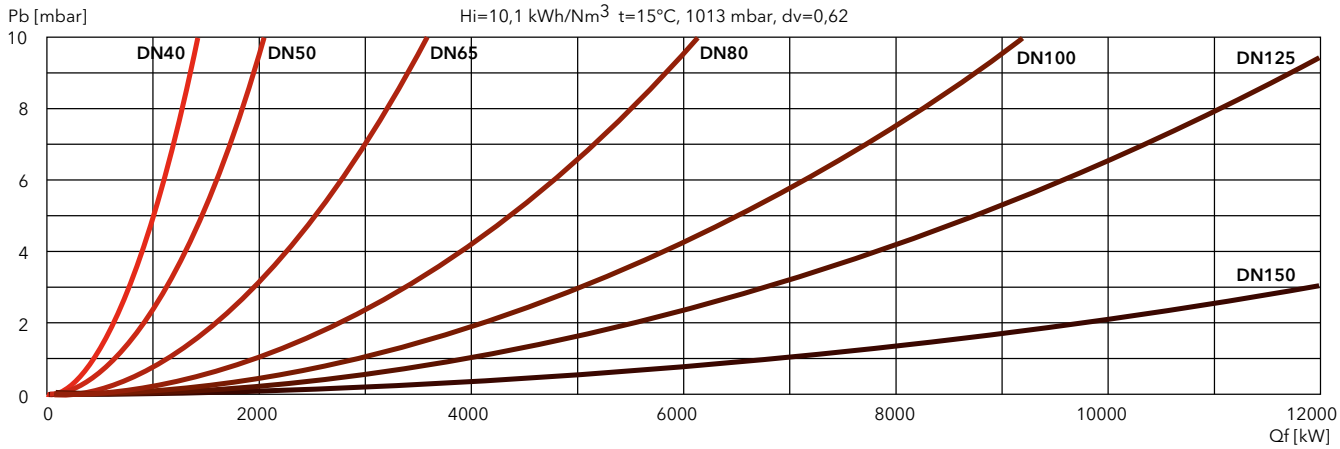

NEXTRON

GAS / LIGHT OIL

Low NOx Class 2

N8 GL-E / N9 GL-E

800 … 10620 kW
Two stage progressive/modulating electronic in gas and in light oil

- **Fuels:** natural gas, Hi = 6,99 … 11,39 kWh/Nm³;
  light oil, viscosity 6 mm²/s at 20°C, Hi = 11,86 kWh/kg
- **Emission class:** Low NOx class 2 (≤120 mg/kWh) according to EN676 in gas
  Low NOx class 2 (≤185 mg/kWh) according to EN267 in light oil
- **Protection level:** IP 41

TECHNICAL DATA

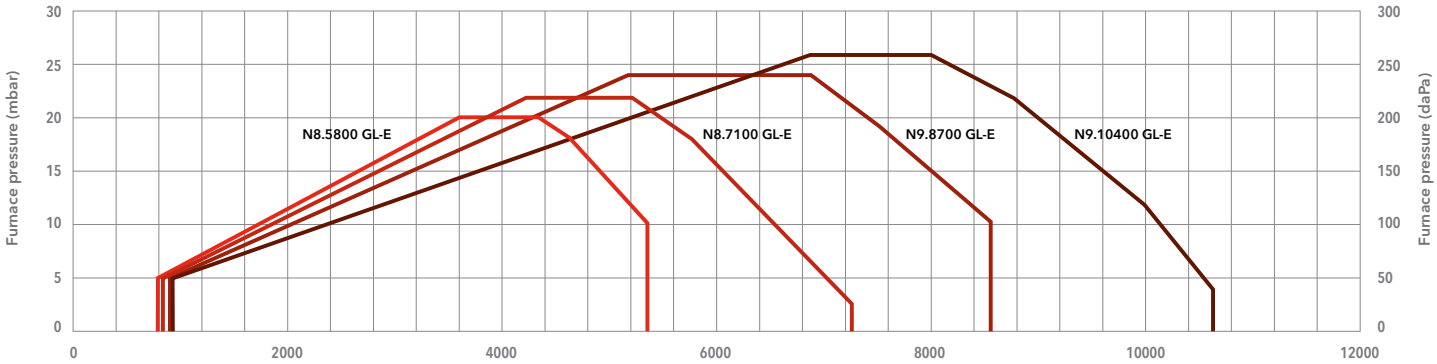

Test conditions conforming to EN676 and EN267 - Temperature: 20°C - Pressure: 1013,5 mbar - Altitude: 0 m a.s.l.

Power (kW)

	N8.5800 GL-E	N8.7100 GL-E	N9.8700 GL-E	N9.10400 GL-E
Operating range gas	800 – 5350 kW	820 – 7340 kW	880 – 8530 kW	910 – 10620 kW
Operating range oil	1210 – 5350 kW	1470 – 7340 kW	2400 – 8530 kW	2820 – 10620 kW
Gas pressure	100 – 500 mbar (100 – 360 mbar for d457 gas train)		100 – 500 mbar (100 – 360 mbar for d457 gas train)	
Gas connection	DN100	DN100	DN100	DN100
Auxiliary voltage	1NPE AC 230 V – 50 Hz TN-S	1NPE AC 230 V – 50 Hz TN-S	1NPE AC 230 V – 50 Hz TN-S	1NPE AC 230 V – 50 Hz TN-S
Power supply	3PE AC 400 V – 50 Hz	3PE AC 400 V – 50 Hz	3PE AC 400 V – 50 Hz	3PE AC 400 V – 50 Hz
Control box / flame detector	BT300 / QRA2	BT300 / QRA2	BT300 / QRA2	BT300 / QRA2
Fan motor	50 Hz – 11 kW	50 Hz – 15 kW	50 Hz – 18,5 kW	50 Hz – 22 kW
Pump	SMG1630 – 1700 l/h	SMG1630 – 1700 l/h	SMG1630 – 1700 l/h	SMG1631 – 2200 l/h
Motor pump	50 Hz – 3 kW	50 Hz – 3 kW	50 Hz – 3 kW	50 Hz – 4 kW
Acoustic level	<77,4 dB(A)	<79,5 dB(A)	<81 dB(A)	<81,7 dB(A)
CE certificate	0085CL0215	0085CL0215	0085CL0215	0085CL0215
Complete burner codes	**on request**	**on request**	**on request**	**on request**

GAS TRAINS

DUNGS

Model	Code
GT-d457-2" (*)	3750515
GT-d458-65	3750516
GT-d459-80	3750517
GT-d460-100	3750518
GT-d125	on request

*: integrated filter

SIEMENS

Model	Code
GT-s456-1"1/2	3750536
GT-s457-2"	3750537
GT-s458-65	3750538
GT-s459-80	3750539
GT-s460-100	3750540
GT-s461-125	3750541

FILTERS

Model	Code
FG-Rp1"1/2	3757199
FG-Rp2"	3757200
FG-DN65	3757198
FG-DN80	3757201
FG-DN100	3757195
FG-DN125	3757209

i **Pressure drops graphs**: see following pages
Dimensions of gas trains and gas filters: see page 311

DIMENSIONS (mm)

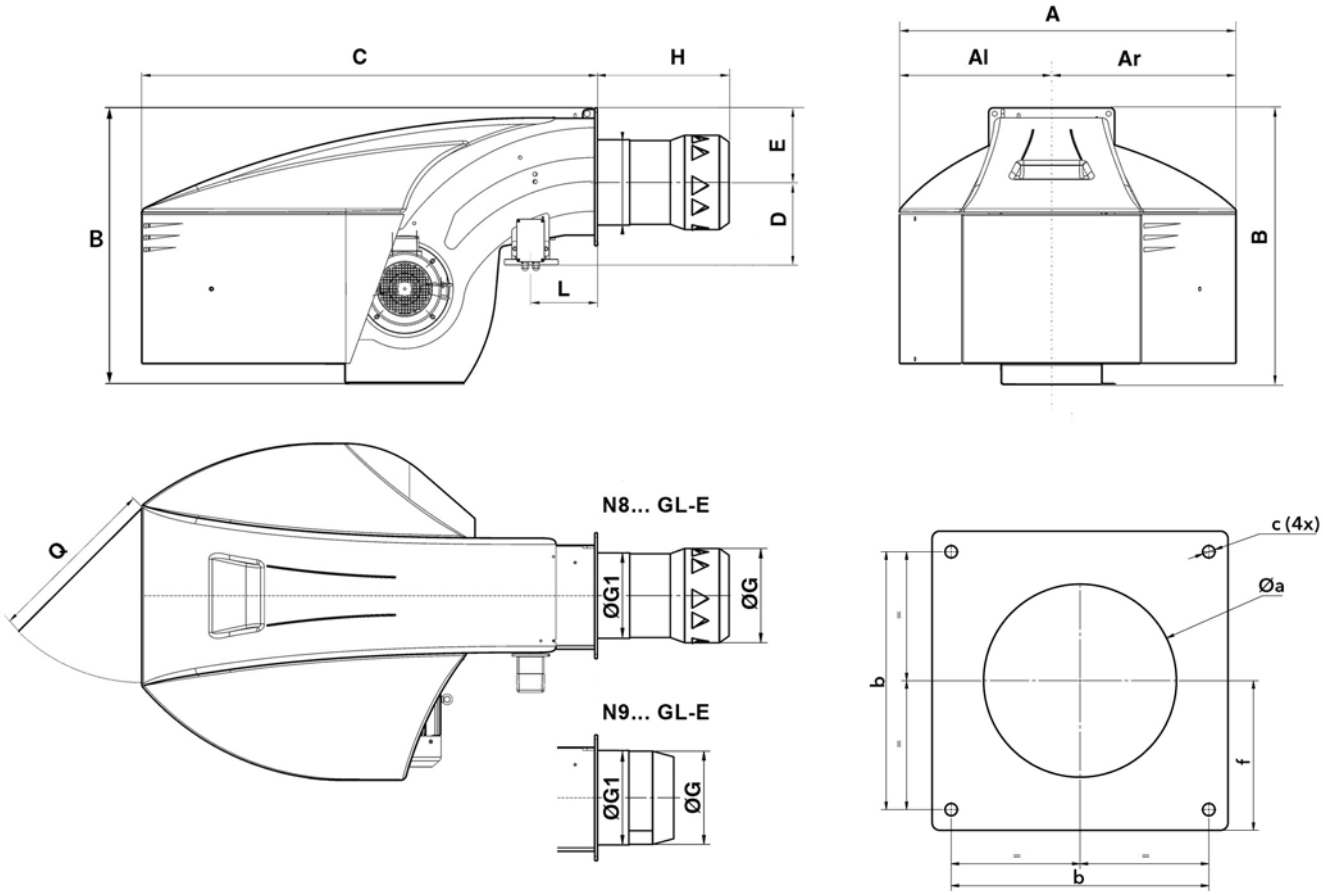

Model	A	Al	Ar	B	C	D	E	ØG	ØG1	H			L	Q
										KN	KM	KL		
N8.5800 GL-E	1325	670	655	1231	1930	307	293	400	376	562	702	842	230	800
N8.7100 GL-E	1325	670	655	1231	1930	307	293	415	376	583	723	863	230	800
N9.8700 GL-E	1414	669	745	1291	1928	416	293	431,5	438,5	355	505	655	230	800
N9.10400 GL-E	1414	669	745	1291	1928	416	293	431,5	438,5	355	505	655	230	800

Øa	b	c	f
415-480	505	M20	293
430-480	505	M20	293
450-480	505	M20	293
450-480	505	M20	293

PACKAGING

The burner is delivered on a pallet with:
- burner body with mounted combustion head
- gas train and filter
- boiler fixing accessories
- technical documentation

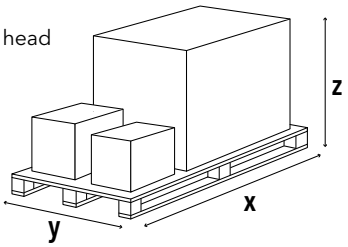

Model	Dimensions (mm)			Gross weight (kg)
	X	Y	Z	
N8.5800 GL-E	2900	1600	1573	700
N8.7100 GL-E	2900	1600	1573	700
N9.8700 GL-E	2900	1600	1573	760
N9.10400 GL-E	2900	1600	1573	760

N8 GL-E / N9 GL-E

800 ... 10620 kW
Two stage progressive/modulating electronic in gas and in light oil

PRESSURE LOSS [BURNER HEAD + GAS TRAIN] (mbar)

N8.5800 GL-E

DUNGS

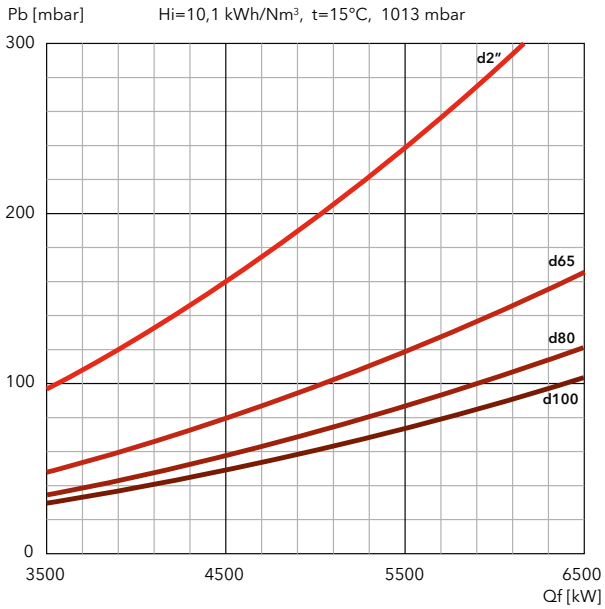

SIEMENS

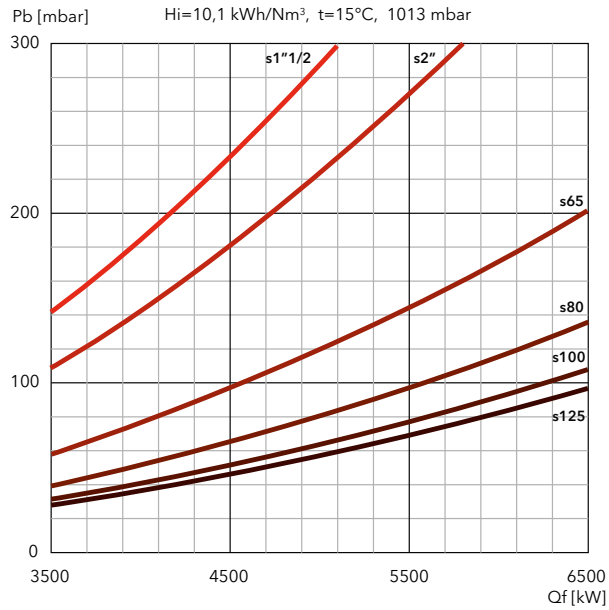

N8.7100 GL-E

DUNGS

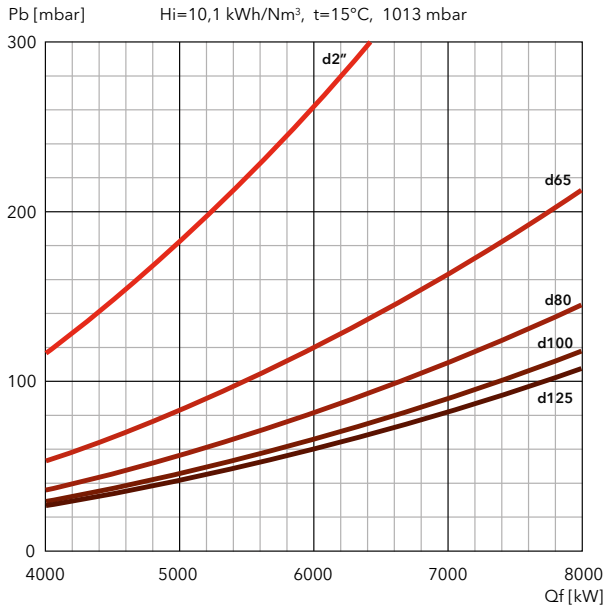

SIEMENS

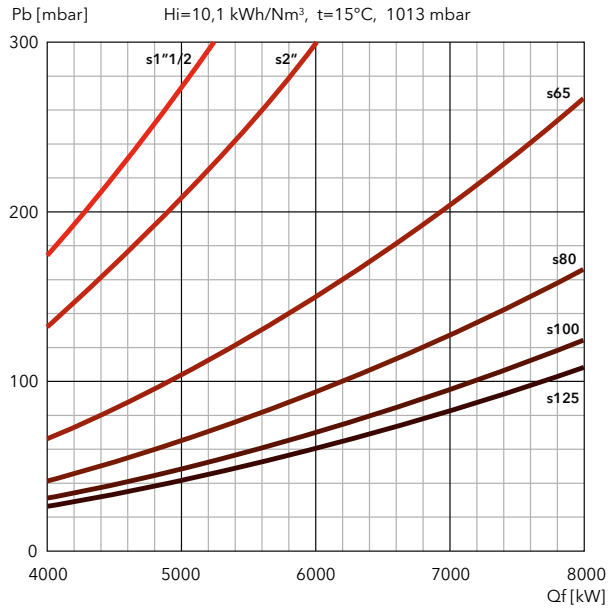

FILTERS

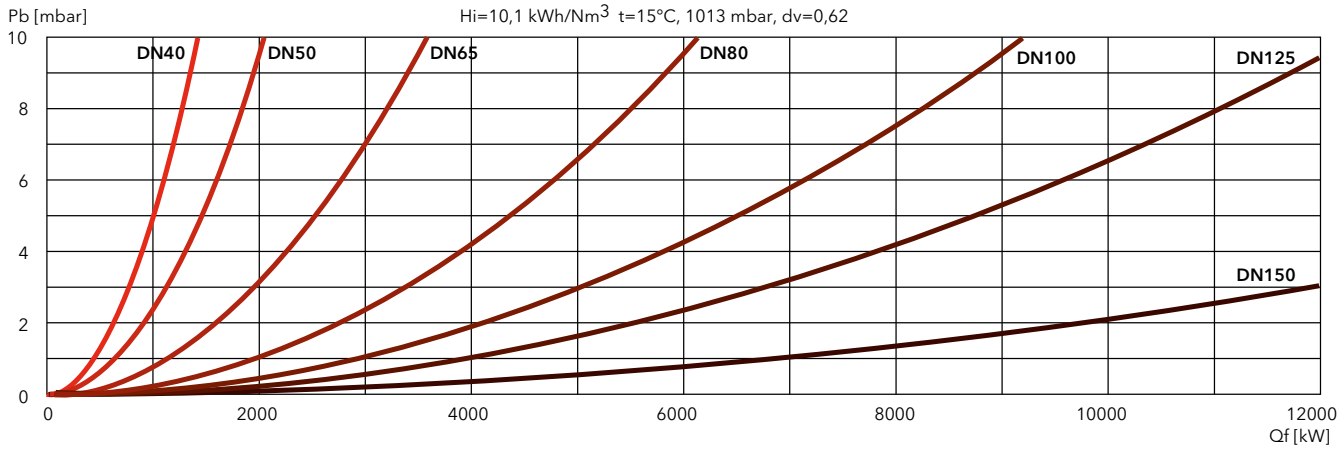

PRESSURE LOSS [BURNER HEAD + GAS TRAIN] (mbar)

N9.8700 GL-E

DUNGS

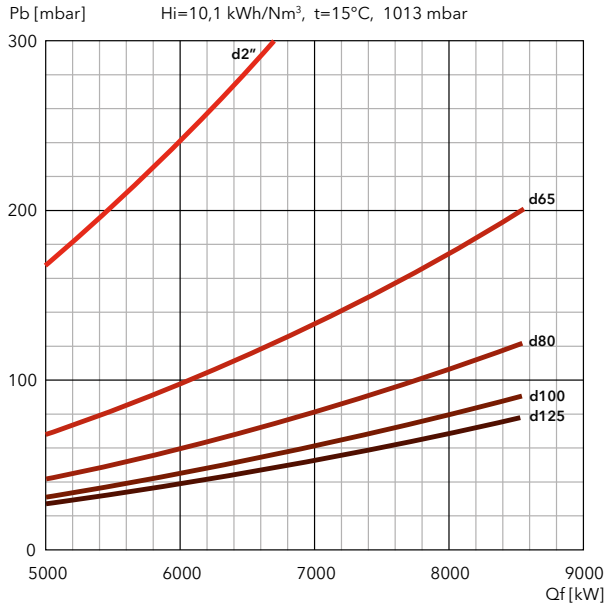

SIEMENS

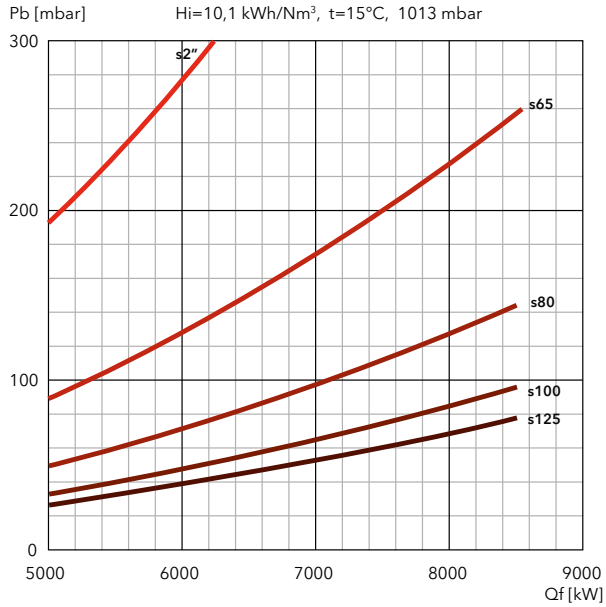

N9.10400 GL-E

DUNGS

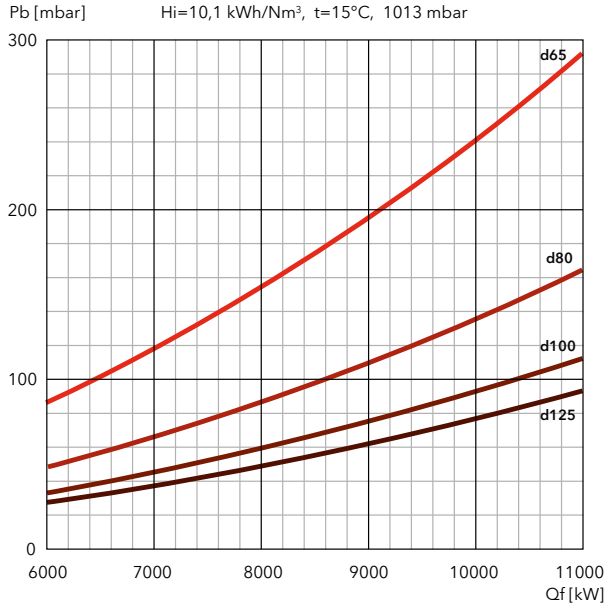

SIEMENS

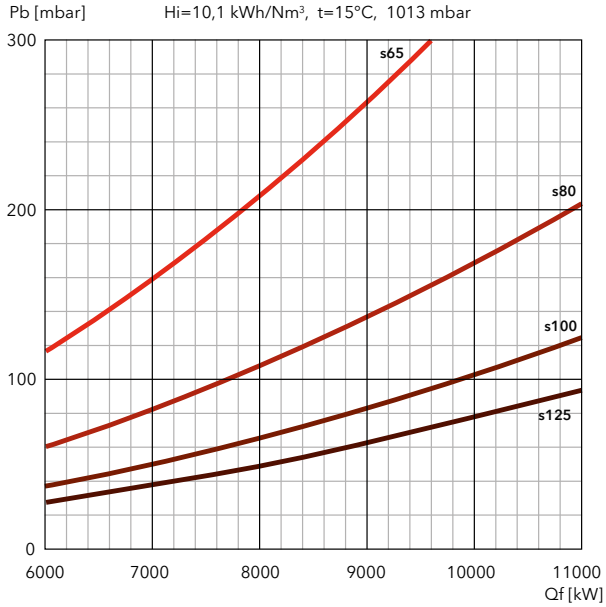

FILTERS

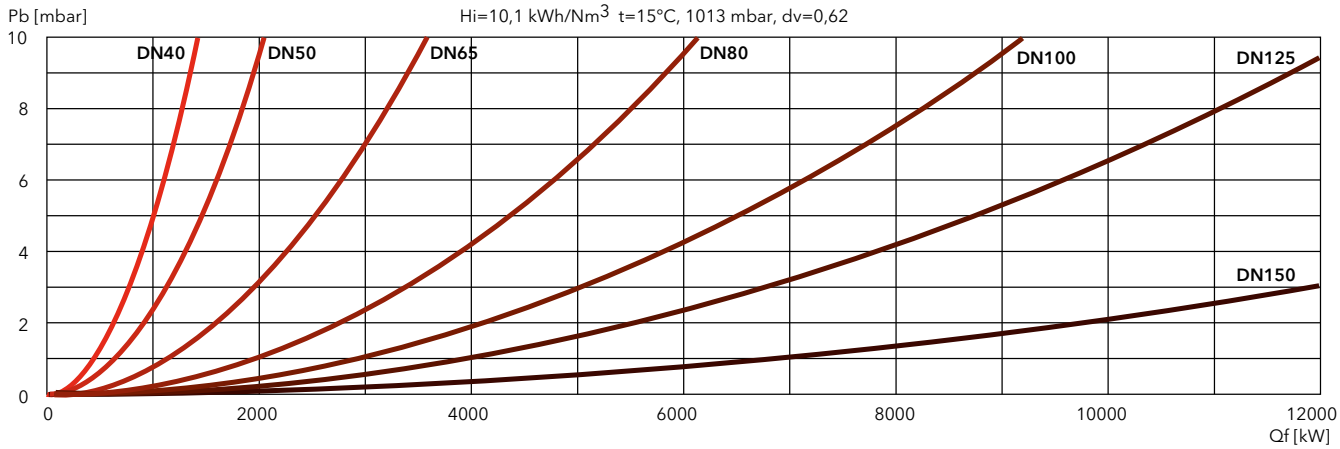

NEXTRON

LIGHT OIL

Low NOx Class 3

N6 L-EF3 / N7 L-EF3

360 … 4820 kW
Two stage progressive/modulating electronic

- **Fuels:** light oil, viscosity 6 mm²/s at 20°C, Hi = 11,86 kWh/kg
- **Emission class:** Low NOx class 3 (≤120 mg/kWh) according to EN267
- **Protection level:** IP 41

TECHNICAL DATA

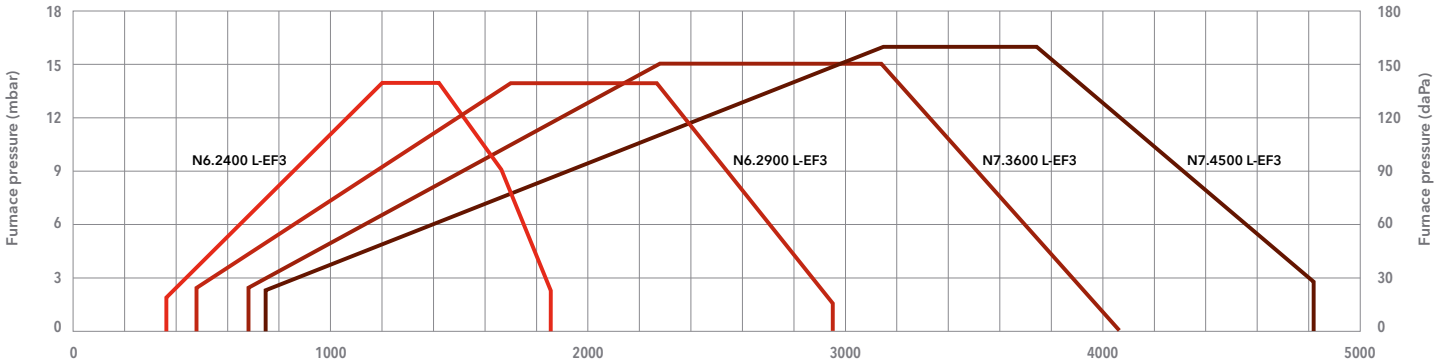

Test conditions conforming to EN267 - Temperature: 20°C - Pressure: 1013,5 mbar - Altitude: 0 m a.s.l.

Power (kW)

	N6.2400 L-EF3	N6.2900 L-EF3	N7.3600 L-EF3	N7.4500 L-EF3
Operating range	360 – 1850 kW	480 – 2950 kW	680 – 4070 kW	740 – 4820 kW
Fuel connection	DN20 x 1500 mm / R 1/2"	DN20 x 1500 mm / R 1/2"	DN20 x 1500 mm / R 3/4"	DN20 x 1500 mm / R 3/4"
Auxiliary voltage	1NPE AC 230 V – 50 Hz TN-S	1NPE AC 230 V – 50 Hz TN-S	1NPE AC 230 V – 50 Hz TN-S	1NPE AC 230 V – 50 Hz TN-S
Power supply	3PE AC 400 V – 50 Hz	3PE AC 400 V – 50 Hz	3PE AC 400 V – 50 Hz	3PE AC 400 V – 50 Hz
Control box / flame detector	BT300 / FFS08	BT300 / FFS08	BT300 / FFS08	BT300 / FFS08
Fan motor	50 Hz – 3 kW	50 Hz – 4 kW	50 Hz – 7,5 kW	50 Hz – 7,5 kW
Pump	SUNTEC TA3	SUNTEC TA3	SUNTEC TA4	SUNTEC TA5
Motor pump	50 Hz – 0,74 kW	50 Hz – 0,74 kW	50 Hz – 1,1 kW	50 Hz – 1,5 kW
Acoustic level	<71 dB(A)	<71 dB(A)	<76 dB(A)	<74 dB(A)
CE certificate	0085CL0215	0085CL0215	0085CL0215	0085CL0215
Complete burner codes	**on request**	**on request**	**on request**	**on request**

DIMENSIONS (mm)

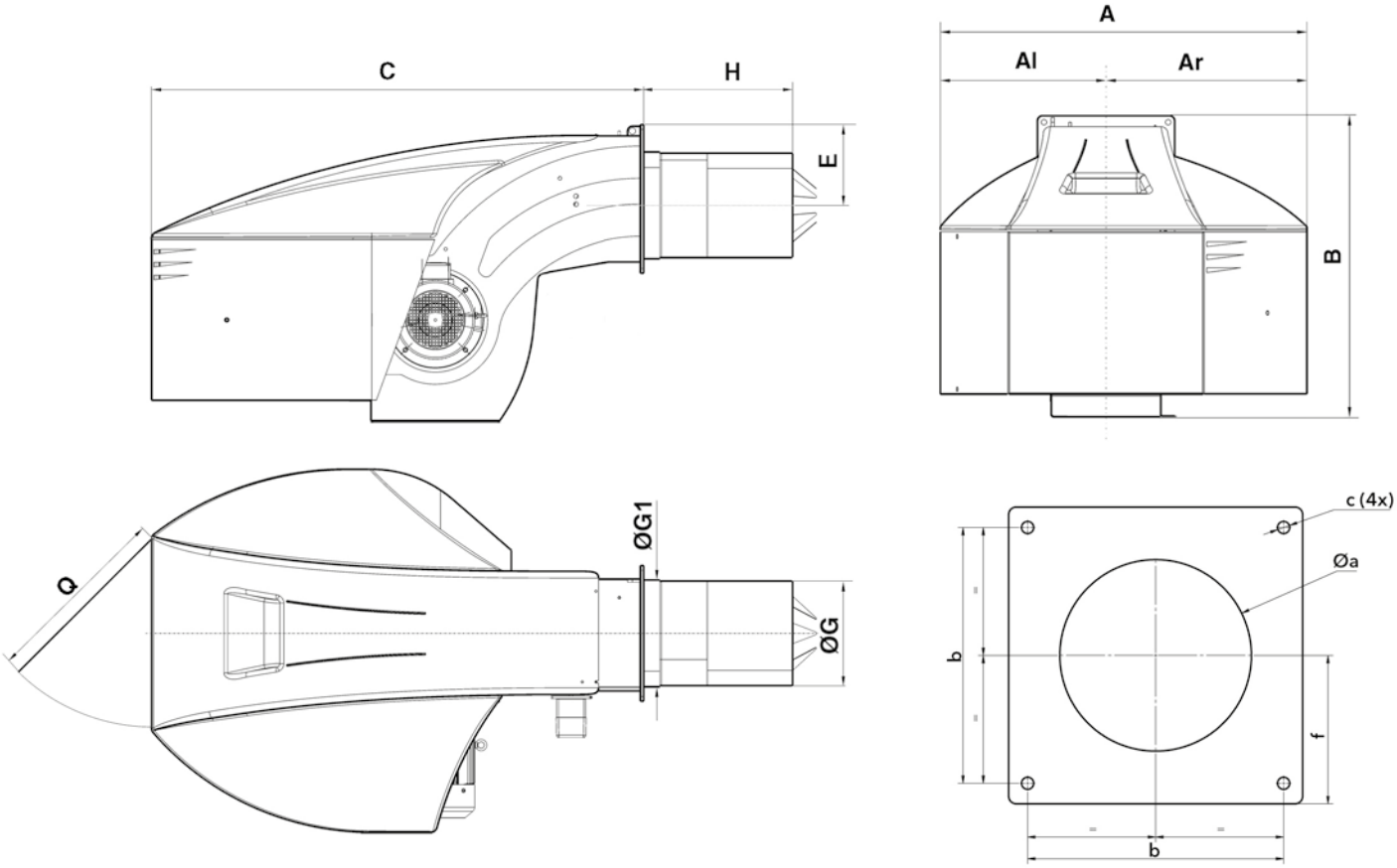

Model	A	Al	Ar	B	C	E	ØG	ØG1	H			Q
									KN	KM	KL	
N6... L-EF3	990	479	510	837	1361	225	263,5	270	330	450	570	600
N7... L-EF3	1128	511	618	961	1529	255	325	332	375	505	635	600

Øa	b	c	f
300-340	340	M16	200
360-400	400	M16	235

PACKAGING

The burner is delivered on a pallet with:
- burner body with mounted combustion head
- boiler fixing accessories
- technical documentation

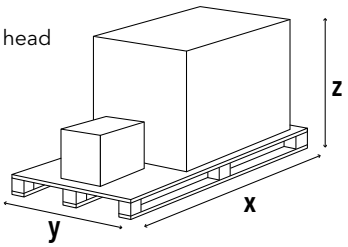

Model	Dimensions (mm)			Gross weight (kg)
	X	Y	Z	
N6.2400 L-EF3	2300	1500	1573	360
N6.2900 L-EF3	2300	1500	1573	360
N7.3600 L-EF3	2300	1500	1573	450
N7.4500 L-EF3	2300	1500	1573	450

NEXTRON

LIGHT OIL

Low NOx Class 3

N8 L-EF3 / N9 L-EF3 / N9 L-EUF

1100 … 9570 kW
Two stage progressive/modulating electronic

- **Fuels:** light oil, viscosity 6 mm²/s at 20°C, Hi = 11,86 kWh/kg
- **Emission class:** Low NOx class 3 (≤120 mg/kWh) according to EN267
- **Protection level:** IP 41

TECHNICAL DATA

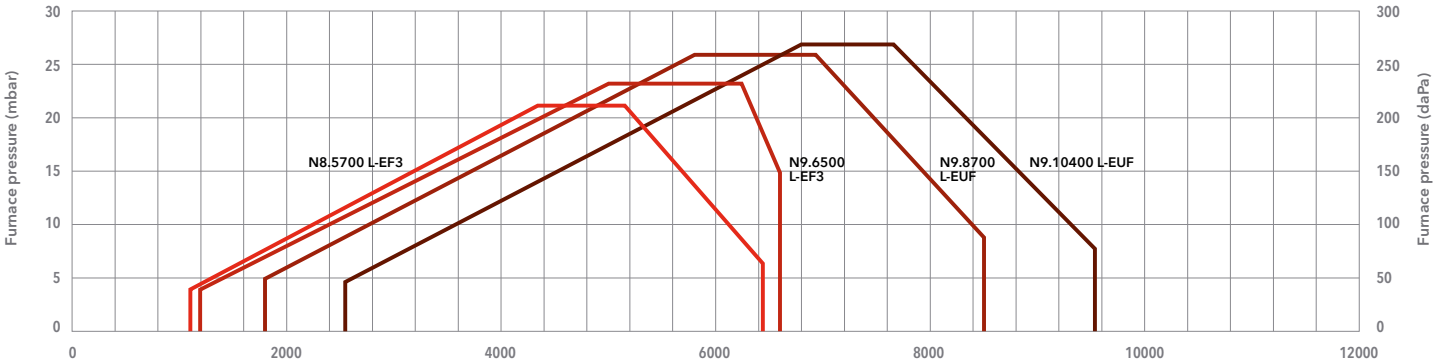

Test conditions conforming to EN267 - Temperature: 20°C - Pressure: 1013,5 mbar - Altitude: 0 m a.s.l.

Power (kW)

	N8.5700 L-EF3	N9.6500 L-EF3	N9.8700 L-EUF	N9.10400 L-EUF
Operating range	1100 – 6450 kW	1200 – 6600 kW	1800 – 8500 kW	2550 – 9570 kW
Fuel connection	DN20 x 1500 mm / R 3/4"	DN20 x 1500 mm / R 3/4"	DN20 x 1500 mm / R 3/4"	DN25 x 1500 mm / R 1"
Auxiliary voltage	1NPE AC 230 V – 50 Hz TN-S	1NPE AC 230 V – 50 Hz TN-S	1NPE AC 230 V – 50 Hz TN-S	1NPE AC 230 V – 50 Hz TN-S
Power supply	3PE AC 400 V – 50 Hz	3PE AC 400 V – 50 Hz	3PE AC 400 V – 50 Hz	3PE AC 400 V – 50 Hz
Control box / flame detector	BT300 / FFS08	BT300 / FFS08	BT300 / FFS08	BT300 / FFS08
Fan motor	50 Hz – 15 kW	50 Hz – 22 kW	50 Hz – 18,5 kW	50 Hz – 22 kW
Pump	SMG1630 – 1700 l/h	SMG1630 – 1700 l/h	SMG1630 – 1700 l/h	SMG1631 – 2200 l/h
Motor pump	50 Hz – 3 kW	50 Hz – 3 kW	50 Hz – 3 kW	50 Hz – 4 kW
Acoustic level	<80,2 dB(A)	<82,9 dB(A)	<81 dB(A)	<81,7 dB(A)
CE certificate	0085CL0215	0085CL0215	0085CL0215	0085CL0215
Complete burner codes	**on request**	**on request**	**on request**	**on request**

DIMENSIONS (mm)

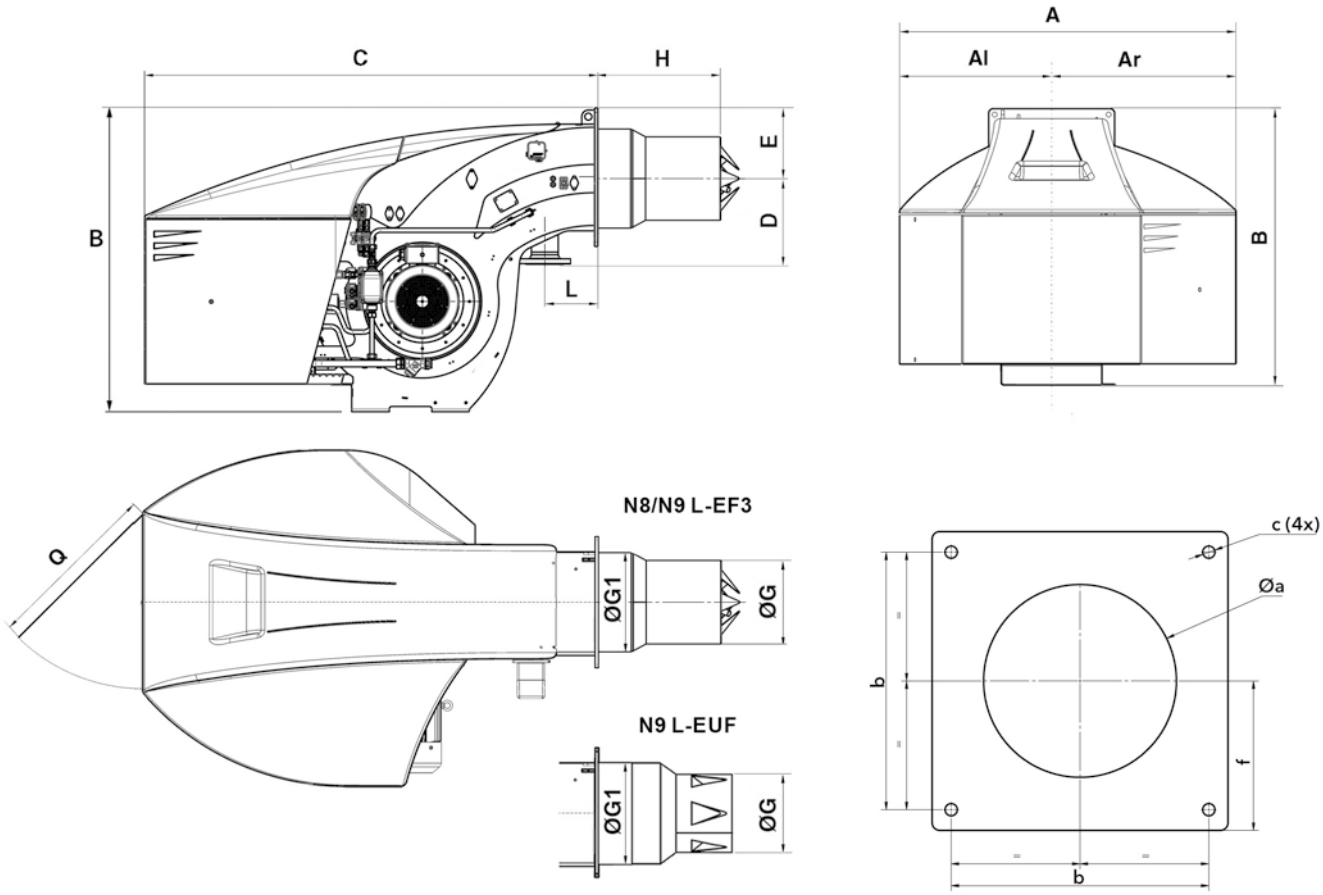

Model	A	Al	Ar	B	C	E	ØG	ØG1	H			Q	Øa	b	c	f
									KN	KM	KL					
N8.5700 L-EF3	1414	669	745	1291	1928	293	369	376	528	668	808	800	380-410	505	M20	293
N9.6500 L-EF3	1414	669	745	1291	1928	293	369	438,5	543	693	843	800	445-480	505	M20	293
N9.8700 L-EUF	1414	669	745	1291	1928	293	325	438,5	575	725	875	800	445-480	505	M20	293
N9.10400 L-EUF	1414	669	745	1291	1928	293	335	438,5	575	725	875	800	445-480	505	M20	293

PACKAGING

The burner is delivered on a pallet with:
- burner body with mounted combustion head
- boiler fixing accessories
- technical documentation

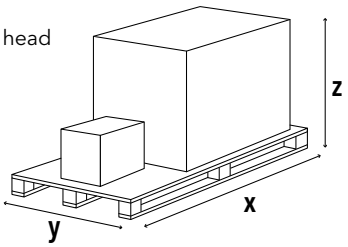

Model	Dimensions (mm)			Gross weight (kg)
	X	Y	Z	
N8.5700 L-EF3	2900	1600	1573	700
N9.6500 L-EF3	2900	1600	1573	760
N9.8700 L-EUF	2900	1600	1573	760
N9.10400 L-EUF	2900	1600	1573	760

NEXTRON

LIGHT OIL

Low NOx Class 2

N6 L-E / N7 L-E

510 ... 4900 kW
Two stage progressive/modulating electronic

- **Fuels:** light oil, viscosity 6 mm²/s at 20°C, Hi = 11,86 kWh/kg
- **Emission class:** Low NOx class 2 (≤185 mg/kWh) according to EN267
- **Protection level:** IP 41

TECHNICAL DATA

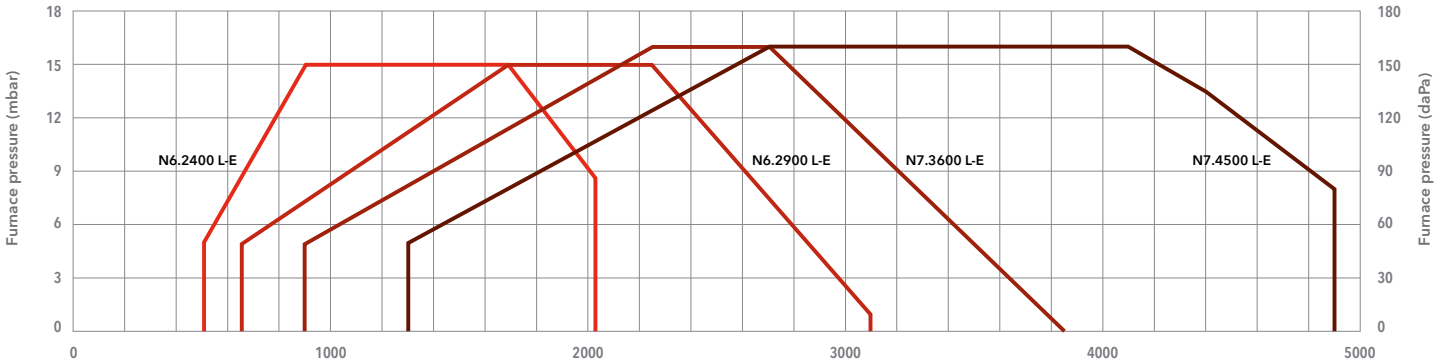

Test conditions conforming to EN267 - Temperature: 20°C - Pressure: 1013,5 mbar - Altitude: 0 m a.s.l.

Power (kW)

	N6.2400 L-E	N6.2900 L-E	N7.3600 L-E	N7.4500 L-E
Operating range	510 – 2030 kW	650 – 3100 kW	900 – 3850 kW	1300 – 4900 kW
Fuel connection	DN20 x 1500 mm / R 1/2"	DN20 x 1500 mm / R 1/2"	DN20 x 1500 mm / R 3/4"	DN20 x 1500 mm / R 3/4"
Auxiliary voltage	1NPE AC 230 V – 50 Hz TN-S	1NPE AC 230 V – 50 Hz TN-S	1NPE AC 230 V – 50 Hz TN-S	1NPE AC 230 V – 50 Hz TN-S
Power supply	3PE AC 400 V – 50 Hz	3PE AC 400 V – 50 Hz	3PE AC 400 V – 50 Hz	3PE AC 400 V – 50 Hz
Control box / flame detector	BT300 / QRA2	BT300 / QRA2	BT300 / QRA2	BT300 / QRA2
Fan motor	50 Hz – 3 kW	50 Hz – 4 kW	50 Hz – 5,5 kW	50 Hz – 7,5 kW
Pump	SUNTEC TA3	SUNTEC TA3	SUNTEC TA4	SUNTEC TA5
Motor pump	50 Hz – 0,74 kW	50 Hz – 0,74 kW	50 Hz – 1,1 kW	50 Hz – 1,5 kW
Acoustic level	<70 dB(A)	<71 dB(A)	<74 dB(A)	<75 dB(A)
CE certificate	0085CL0215	0085CL0215	0085CL0215	0085CL0215
Complete burner codes	**on request**	**on request**	**on request**	**on request**

DIMENSIONS (mm)

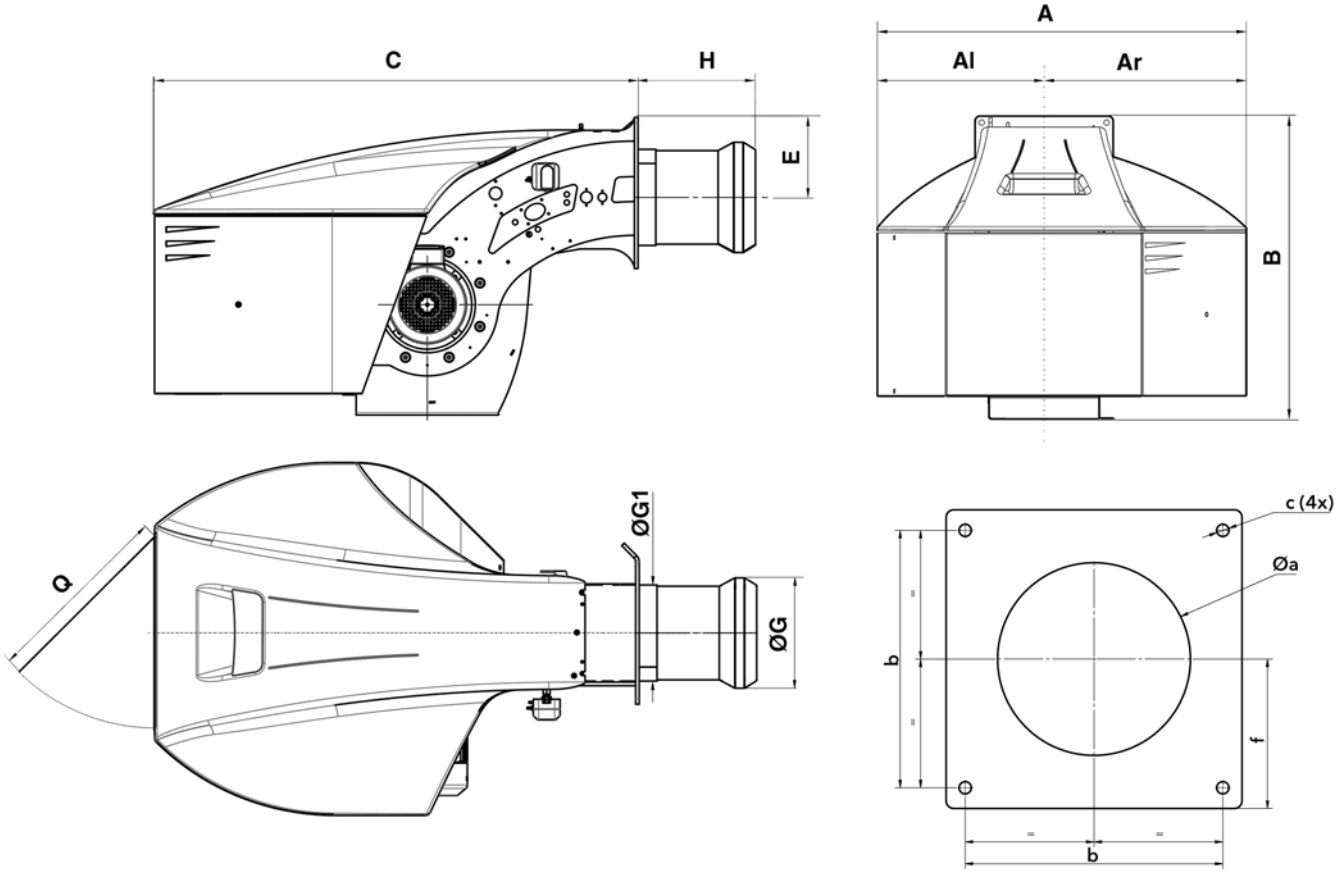

Model	A	Al	Ar	B	C	E	ØG	ØG1	H			Q	Øa	b	c	f
									KN	KM	KL					
N6.2400 L-E	990	479	510	837	1361	225	290	270	330	450	570	600	300-340	340	M16	200
N6.2900 L-E	990	479	510	837	1361	225	310	270	330	450	570	600	320-340	340	M16	200
N7.3600 L-E	1128	511	618	961	1529	255	330	332	375	505	635	600	340-400	400	M16	235
N7.4500 L-E	1128	511	618	961	1529	255	370	332	375	505	635	600	380-400	400	M16	235

PACKAGING

The burner is delivered on a pallet with:
- burner body with mounted combustion head
- boiler fixing accessories
- technical documentation

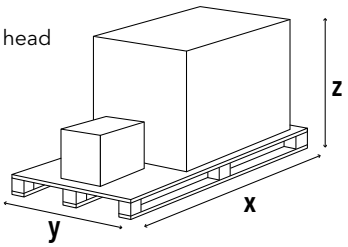

Model	Dimensions (mm)			Gross weight (kg)
	X	Y	Z	
N6.2400 L-E	2300	1500	1573	360
N6.2900 L-E	2300	1500	1573	360
N7.3600 L-E	2300	1500	1573	450
N7.4500 L-E	2300	1500	1573	450

NEXTRON

LIGHT OIL

Low NOx Class 2

N8 L-E / N9 L-E

1350 … 10620 kW
Two stage progressive/modulating electronic

- **Fuels:** light oil, viscosity 6 mm²/s at 20°C, Hi = 11,86 kWh/kg
- **Emission class:** Low NOx class 2 (≤185 mg/kWh) according to EN267
- **Protection level:** IP 41

TECHNICAL DATA

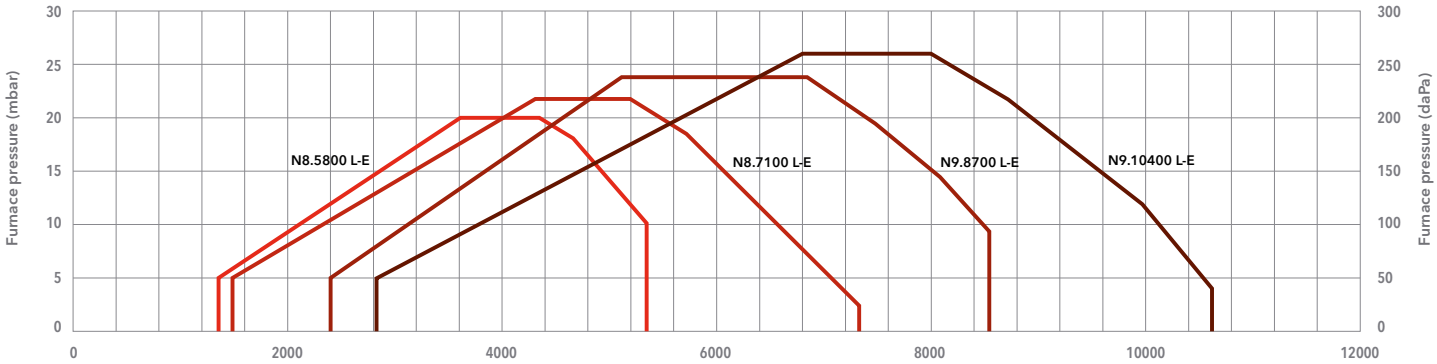

Test conditions conforming to EN267 - Temperature: 20°C - Pressure: 1013,5 mbar - Altitude: 0 m a.s.l.

Power (kW)

	N8.5800 L-E	N8.7100 L-E	N9.8700 L-E	N9.10400 L-E
Operating range	1350 – 5350 kW	1470 – 7340 kW	2400 – 8530 kW	2820 – 10620 kW
Fuel connection	DN20 x 1500 mm / R 3/4"	DN20 x 1500 mm / R 3/4"	DN25 x 1500 mm / R 1"	DN25 x 1500 mm / R 1"
Auxiliary voltage	1NPE AC 230 V – 50 Hz TN-S	1NPE AC 230 V – 50 Hz TN-S	1NPE AC 230 V – 50 Hz TN-S	1NPE AC 230 V – 50 Hz TN-S
Power supply	3PE AC 400 V – 50 Hz	3PE AC 400 V – 50 Hz	3PE AC 400 V – 50 Hz	3PE AC 400 V – 50 Hz
Control box / flame detector	BT300 / QRA2	BT300 / QRA2	BT300 / QRA2	BT300 / QRA2
Fan motor	50 Hz – 11 kW	50 Hz – 15 kW	50 Hz – 18,5 kW	50 Hz – 22 kW
Pump	SMG1630 – 1700 l/h	SMG1630 – 1700 l/h	SMG1631 – 2200 l/h	SMG1631 – 2200 l/h
Motor pump	50 Hz – 3 kW	50 Hz – 3 kW	50 Hz – 4 kW	50 Hz – 4 kW
Acoustic level	<77,4 dB(A)	<79,5 dB(A)	<81 dB(A)	<81,7 dB(A)
CE certificate	0085CL0215	0085CL0215	0085CL0215	0085CL0215
Complete burner codes	**on request**	**on request**	**on request**	**on request**

DIMENSIONS (mm)

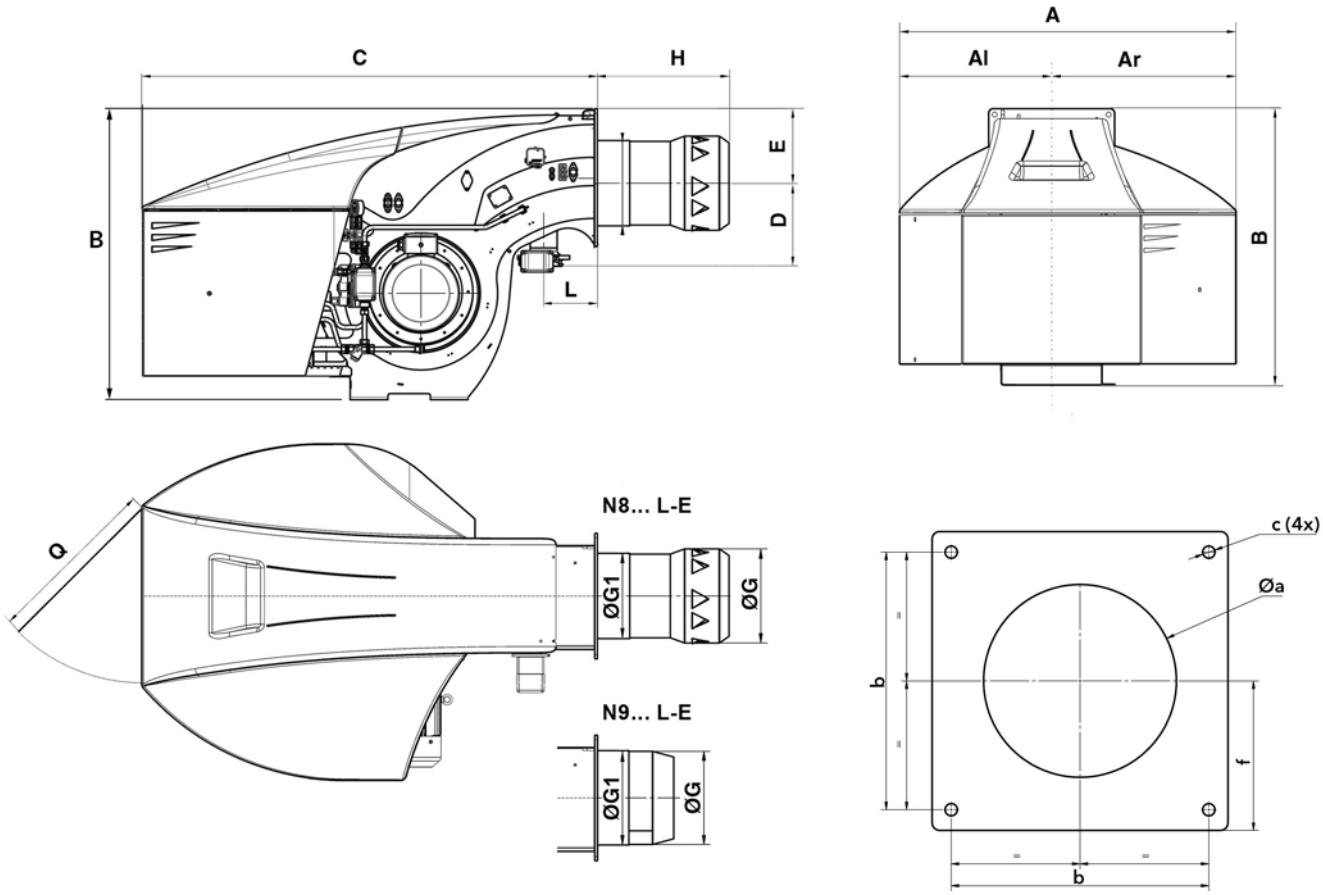

Model	A	Al	Ar	B	C	E	ØG	ØG1	H			Q	Øa	b	c	f
									KN	KM	KL					
N8.5800 L-E	1414	669	745	1231	1930	293	400	376	562	702	842	800	430-480	505	M20	293
N8.7100 L-E	1414	669	745	1231	1930	293	415	376	583	723	863	800	445-480	505	M20	293
N9.8700 L-E	1414	669	745	1291	1928	293	431,5	438,5	355	505	655	800	445-480	505	M20	293
N9.10400 L-E	1414	669	745	1291	1928	293	431,5	438,5	355	505	655	800	445-480	505	M20	293

PACKAGING

The burner is delivered on a pallet with:
- burner body with mounted combustion head
- boiler fixing accessories
- technical documentation

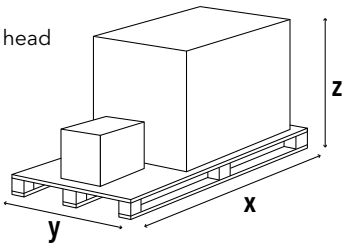

Model	Dimensions (mm)			Gross weight (kg)
	X	Y	Z	
N8.5800 L-E	2900	1600	1573	700
N8.7100 L-E	2900	1600	1573	700
N9.8700 L-E	2900	1600	1573	760
N9.10400 L-E	2900	1600	1573	760

LCM MODULE (for communication, O_2 control, frequency converter)

Module mounted in factory, requested for O_2 control, Variatron and communication buses connections (the module is available also on request as a separate kit) Note: only one LCM module is necessary for these 3 options; it is already included in the GL-E.../BT3 versions	**3752433**

MODULATING OPERATION

Regulator RWF55 + instruction manual Kit mounted in factory on the switch cabinet to be connected to the appropriate probe (see "BURNER KITS" session)	**3752364**

FREQUENCY CONVERTER

Variatron mounted in factory inside the switch cabinet including the VSM module for the burners with BT300 control box
Note: one LCM module is required and <u>must be ordered separately</u> (for burners equipped with the BT300)

Frequency converter for **N6.2400**	**3751418**
Frequency converter for **N6.2900**	**3751419**
Frequency converter for **N7.3600 G-E/G-EU2/GL-E/L-E**	**3751420**
Frequency converter for **N7.3600 G-EF3/GL-EF3/L-EF3 and N7.4500**	**3751421**
Frequency converter for **N8.5800 G-...**	**3750778**
Frequency converter for **N8.7100 G-...**	**3750779**
Frequency converter for **N9.8700 G-...**	**3750780**
Frequency converter for **N9.10400 G-...**	**3750781**
Frequency converter for **N8.5800 GL-... and L-...**	**3751422**
Frequency converter for **N8.7100 GL-... and L-...**	**3751423**
Frequency converter for **N9.8700 GL-E and L-...**	**3751424**
Frequency converter for **N9.10400 GL-E and L-...**	**3751425**
Frequency converter for **N9.8700 GL-EUF**	**3751498**
Frequency converter for **N9.10400 GL-EUF**	**3751499**

FREQUENCY CONVERTER ARRANGEMENT

Burner prepared to be connected to an external frequency inverter
NOTE: one LCM module is required and <u>must be ordered separately</u> (for burners equipped with the BT300)

N6.2400 G-... prepared for an external frequency converter of **3 kW**	**3751426**
N6.2900 G-... prepared for an external frequency converter of **4 kW**	**3751427**
N7.3600 G-E and N7.4500 G-EU2 prepared for an external frequency converter of **5,5 kW**	**3751428**
N7.3600 G-EF3 and N7.4500 G-E/G-EF3 prepared for an external frequency converter of **7,5 kW**	**3751429**
N8.5800 G-E prepared for an external frequency converter of **11 kW**	**3751113**
N8.7100 G-E prepared for an external frequency converter of **15 kW**	**3751114**
N9.8700 G-E prepared for an external frequency converter of **18,5 kW**	**3751115**
N9.10400 G-E prepared for an external frequency converter of **22 kW**	**3751116**
N6 GL-... and N6 L-... prepared for an external frequency converter of **3 kW**	**3751430**
N6 GL-... and N6 L-... prepared for an external frequency converter of **4 kW**	**3751431**
N7 GL-... and N7 L-... prepared for an external frequency converter of **5,5 kW**	**3751432**
N7 GL-... and N7 L-... prepared for an external frequency converter of **7,5 kW**	**3751433**
N8 GL-... and N8 L-... prepared for an external frequency converter of **11 kW**	**3751434**
N8 GL-... and N8 L-... prepared for an external frequency converter of **15 kW**	**3751435**
N9.8700 GL-E and N9 L-... prepared for an external frequency converter of **18,5 kW**	**3751436**
N9.10400 GL-E/GL-EF3 and N9 L-... prepared for an external frequency converter of **22 kW**	**3751437**
N9.8700 GL-EUF prepared for an external frequency converter of **18,5 kW**	**3751500**
N9.10400 GL-EUF prepared for an external frequency converter of **22 kW**	**3751501**

PED EQUIPMENT

Equipment of the gas train and the burner body for continuous operation (PED):
- controller and flame sensor approved for continuous operation,
- maximum gas pressure switch on the gas train,
- test burner (to bleed the gas train),
- PED Conformity Declaration.

Note: if required, the antivibrating coupling (to avoid mechanical tension) has to be selected as option

PED for N6/N7 G-E	with Siemens threaded gas trains	**3750768**
	with Siemens flanged gas trains	**3750769**
	with Dungs threaded gas trains	**3750770**
	with Dungs flanged gas trains	**3750771**
PED for N8/N9 G-E	with Siemens threaded gas trains	**3751120**
	with Siemens flanged gas trains	**3751121**
	with Dungs threaded gas trains	**3751122**
	with Dungs flanged gas trains	**3751123**
PED for N6/N7 G-EF3	with Siemens threaded gas trains	**3750772**
	with Siemens flanged gas trains	**3750773**
	with Dungs threaded gas trains	**3750.873**
	with Dungs flanged gas trains	**3751058**
PED for N6/N7 GL-E	with Siemens threaded gas trains	**3751059**
	with Siemens flanged gas trains	**3751060**
	with Dungs threaded gas trains	**3751061**
	with Dungs flanged gas trains	**3750447**
PED for N6/N7 GL-EF3	with Siemens threaded gas trains	**3751062**
	with Siemens flanged gas trains	**3751063**
	with Dungs threaded gas trains	**3750450**
	with Dungs flanged gas trains	**3751064**
PED for N8/N9 GL-E	with Siemens threaded gas trains	**3751069**
	with Siemens flanged gas trains	**3751070**
	with Dungs threaded gas trains	**3751071**
	with Dungs flanged gas trains	**3751072**
PED for N8/N9 GL-EF3	with Siemens threaded gas trains	**3750460**
	with Siemens flanged gas trains	**3751073**
	with Dungs threaded gas trains	**3751074**
	with Dungs flanged gas trains	**3751075**
PED for N6...N9 G-... and GL-... with terminal block switch cabinet	with Siemens threaded gas trains	**3750764**
	with Siemens flanged gas trains	**3750765**
	with Dungs threaded gas trains	**3750766**
	with Dungs flanged gas trains	**3750767**
PED for N6/N7 L-E		**3751065**
PED for N6/N7 L-EF3		**3751066**
PED for N8/N9 L-E		**3751067**
PED for N8/N9 L-EF3		**3751068**

MAX GAS PRESSURE SWITCH (mounted on the gas train)

N6/N7 G-.../GL-...	with Siemens threaded gas trains	**3751088**
	with Siemens flanged gas trains	**3751089**
	with Dungs threaded gas trains	**3751090**
	with Dungs flanged gas trains	**3751091**
N8/N9 G-.../GL-...	with Siemens threaded gas trains	**3751124**
	with Siemens flanged gas trains	**3751125**
	with Dungs threaded gas trains	**3751126**
	with Dungs flanged gas trains	**3751127**
N6...N9 G-.../GL-... with terminal block switch cabinet	with Siemens threaded gas trains	**3751076**
	with Siemens flanged gas trains	**3751077**
	with Dungs threaded gas trains	**3751078**
	with Dungs flanged gas trains	**3751079**

STAR/DELTA MOTOR STARTER

Star/Delta 3,0 G/BT3 for N6.2400	**3751414**
Star/Delta 4,0 G/BT3 for N6.2900	**3751415**
Star/Delta 5,5 G/BT3 for N7.3600	**3751416**
Star/Delta 7,5 G/BT3 for N7.4500	**3751417**

BLIND DOOR

Door of the switch cabinet without any component. The switches and the power regulator (if required) are mounted inside the switch cabinet

For N6/N7 in gas and light oil operation	**3751411**
For N6/N7 in dual fuel operation	**3751412**
For N8/N9 in gas and light oil operation	**3751119**
For N8/N9 in dual fuel operation	**3751413**

REMOTE SIGNAL 4-20 mA

Remote signal 4-20 mA for BT300 burner variant (Note: one LCM module is required for burners equipped with BT3)	**14099397**

O_2 TRIM FOR BT300, ETAMATIC AND ETAMATIC OEM, FMS/VMS

This kit is used to optimize the combustion in order to keep the air excess as much stable as possible irrespective of the changes that can occur during operations, for instance slight calorific value variations, combustion air temperature and pressure. This improves the seasonal efficiency and therefore reduces the fuel consumption.

The kit includes the following components:
- Lambda transmitter LT3
- Lambda probe LS2
- Probe installation fitting (PIF)
- Gas extraction device (GED)

The control unit has to be installed close to the probe (max 10 m of cable)
The probe needs a calibration but no reference gas is necessary.
The display shows the O_2 content.
Maximum distance between the LT3 and the burner control panel is 500 m.

	Additional LSB modules installed at LT3	GED length	Code
Kit for O_2 trim (LT3 + LS2) **Flue temp max 300 °C – Display for O_2 visualization** (Note: for models equipped with BT3 this kit needs a LCM module installed in the burner control panel)	none	150 mm	**3759296**
		300 mm	**3759297**
		450 mm	**3759298**
	4x 0/4-20 mA output	150 mm	**3759299**
		300 mm	**3759300**
		450 mm	**3759301**
	4x 0/4-20 mA output + 4x digital output	150 mm	**3759302**
		300 mm	**3759303**
		450 mm	**3759304**

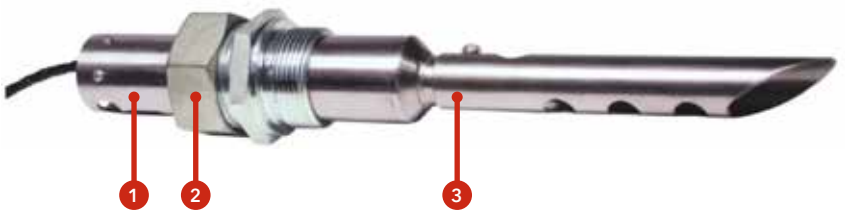

1. Lambda Probe LS2 in standard housing up to 300°C (572°F); default cable length is 2 m (6.5 ft), FEP, with connecting plug
2. Probe installation fitting (PIF)
3. Gas extraction device (GED)

The LS2 lambda probe is equipped with a 2 meter long connection cable that connects the sensor to the transmitter (LT3). It is possible to extend the connection up to a maximum distance of 10 meters (for greater lengths the conformity expires) with a ready-made cable and a probe connection box (PCB).

Description		Code
Extension for LS2	5m ready-made cable	**3759318**
	PCB (probe connection box)*	**3759319**

The PCB is a small terminal box that is connected to the 2 meter long cable already existing on the probe. The wiring between the PCB and the transmitter must be carried out on the construction site with suitable cables and trained personnel.

*: the PCB is mandatory if the end user chooses to use his own connecting cable and not one of those proposed (max total length remains 10m)

O_2/CO_e TRIM FOR BT300, ETAMATIC AND ETAMATIC OEM, FMS/VMS

This kit is used for optimizing the combustion in order to keep the air excess as low as possible in order to maximize the seasonal efficiency and therefore minimize the fuel consumption.
In addition to the features of the O_2 trim only, this kit reduces the air excess to its minimum because this system continuously measures the content of unburned fuel (CO_e) in the flue: should the air excess be reduced too much, the CO_e raises and the system reacts by increasing the air excess in order to keep firing in safe conditions.

The kit includes the following components:
- Lambda transmitter LT3-F
- Lambda probe KS1D
- Probe installation fitting (PIF)
- Gas extraction device (GED)

The control unit has to be installed close to the probe (max 10 m of cable).
The probe needs a calibration but no reference gas is necessary.
The display shows the O_2 and CO_e content.
Maximum distance between the LT3-F and the burner control panel is 500 m.

	Additional LSB modules installed at LT3-F	GED length	Code
Kit for O_2 trim and CO control (LT3-F + KS1D) **Flue temp max 300 °C** (Note: for models equipped with BT3 this kit needs a LCM module installed in the burner control panel)	none	150 mm	**3759305**
		300 mm	**3759306**
		450 mm	**3759307**
	4x 0/4-20 mA output	150 mm	**3759308**
		300 mm	**3759309**
		450 mm	**3759310**
	4x 0/4-20 mA output + 4x digital output	150 mm	**3759311**
		300 mm	**3759312**
		450 mm	**3759313**

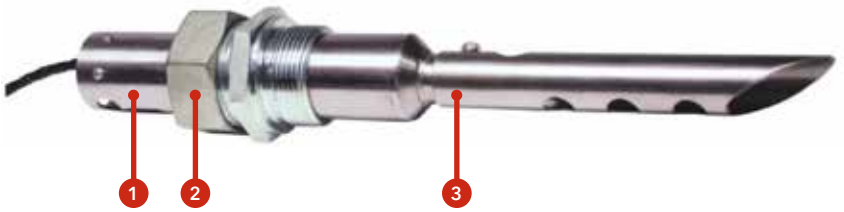

1. Lambda Probe KS1D in standard housing up to 300°C (572°F); default cable length is 2 m (6.5 ft), FEP, with connecting plug
2. Probe installation fitting (PIF)
3. Gas extraction device (GED)

The KS1D lambda probe is equipped with a 2 meter long connection cable that connects the sensor to the transmitter (LT3-F). It is possible to extend the connection up to a maximum distance of 10 meters (for greater lengths the conformity expires) with a ready-made cable and a probe connection box (PCB).

Description		Code
Extension for KS1D	5m ready-made cable	**3759318**
	PCB (probe connection box)*	**3759319**

The PCB is a small terminal box that is connected to the 2 meter long cable already existing on the probe. The wiring between the PCB and the transmitter must be carried out on the construction site with suitable cables and trained personnel.

*: the PCB is mandatory if the end user chooses to use his own connecting cable and not one of those proposed (max total length remains 10m)

REMOTE SOFTWARE

Kit to connect a PC laptop to the BT300 for its parametrization	LSA100 + USB/CAN + CD-Rom	**3751130**

COMMUNICATION MODULES

Modules for external installation Note: one LCM module is required	ModBus/BT3 (EBM100)	**3754456**
	ProfiBus/BT3 (PBM100)	**3752986**
	Profinet/BT3 (EBM112)	**3758317**
	Ethernet/BT3	**on request**

POWER REGULATOR

Power regulator RWF55 stand-alone and kit wiring	**on request**

PROBES

Immersion probes	PT 100: –50°/+400°C (100 mm) + pocket tube (76 mm)	**3750070**
	PT 100: 400°C (160 mm)	**1758574269**
	PT 100: 480°C (250 mm)	**3751009**
Pressure probes	0…1,6 bar	**3752217**
	0…2,5 bar	**1758713722**
	0…6 bar	**1758640660**
	0…10 bar	**1758577280**
	0…16 bar	**1758577291**
	0…25 bar	**3751015**

COUNTER FACE PLATE

CP11	for N6	**3833908**
CP12	for N7	**3833909**
CP13	for N8	**3833910**
CP14	for N9	**3833911**

NEXTRON SPECIAL CONFIGURATIONS (on request)

- **Equipment according EN746-2**
- **Permanent ventilation**
- **60 Hz versions**
- **Remote display (BT3)**
- **Separate switch box / terminal strip version (Etamatic OEM)**
- **LPG firing**
- **Hinge flange**
- **"Burner ON" feedback signal**

Other special requests can be submitted to your Sales Reference for feasibility evaluation

N

MONOBLOCK BURNERS FROM 1300 TO 22000 kW

GAS, LIGHT OIL AND DUAL FUEL

HIGH POWER AND EASE OF USE

Where a compact solution is needed, a monoblock burner offers advantages over individual components. However, above a power output of 10 MW, the conventional burner becomes too heavy: ease of handling during installation and maintenance work suffers, the strain on the boiler door is too high.
The N burners solve this problem with innovative, weight-saving enclosure technology. The key feature is the physical division of the burner into a support frame and a separate air-routing housing.

SIMPLIFIED STRUCTURE TO IMPROVE USABILITY

The burner head and the housing have been almost entirely separated in order to allow sufficient space for the combustion components to be easily removed. The air pipe between the housing and the burner head is simply closed by a removable cover. It is no longer necessary to pivot the entire body of the burner to one side or the other.
An added advantage is the ability to fix the frame to the ground, depending on the application, thus relieving the boiler door from any mechanical stress.

ULTRA LOW NOx TECHNOLOGY, UP TO 22 MW

Thanks to the introduction of the N11 platform and the innovative solutions of this range, ELCO is able to provide high performance and ease of use on its monoblock range up to 22 MW.
The implementation of the FGR System enables to guarantee NOx emissions of less than 30 mg/kWh for all the models of the N range, while the new FX combustion head allow to reach values below 50 mg without implementing the external flue gas recirculating system.

ADVANCED DESIGN FOR LOW NOISE LEVEL

Special attention has been paid to the fan design. The burner's acoustic level meets industry standards, providing a more comfortable working environment. The two main characteristics which limit the noise emitted by a fan are a high and constant static pressure and the use of a wheel with rear facing blades. The result is a stable combustion and reduced noise at the air inlet.

RANGE OVERVIEW

/ GAS RANGE
1300 / 22000 kW

/ DUAL FUEL RANGE
1300 / 16000 kW

/ LIGHT OIL RANGE
3000 / 16670 kW

/ LOW NOx / ULTRA LOW NOx
up to 22000 kW

MAIN TECHNICAL FEATURES

- Two stage progressive/modulating forced draught burner
- Fuels:
  - natural gas, Hi = 6,99 … 11,39 kWh/Nm^3
  - light oil, viscosity 6 mm^2/s at 20°C, Hi = 11,86 kWh/kg
- Combustion technology:
  - Low NOx class 4 (≤60 mg/kWh), class 3 (≤80 mg/kWh) and class 2 (≤120 mg/kWh) in gas operation, acccording to EN676
  - Low NOx class 3 (≤120 mg/kWh) and class 2 (≤185 mg/kWh) in light oil operation, according to EN267
  - Models equipped with FGR System to reach NOx emission values below 30 mg/kWh
- Control box: built-in (Etamatic OEM control box installed inside the junction box) or external, according to customer requirements
- Three flame tube lengths available
- Secured burner head adjustments during maintenance (RTC System)
- Closing of the air damper on burner shut-down
- Multiple gas train matching according to the inlet gas pressure
- Gas train factory assembled and tested for tightness and electrical security
- Products are in compliance with EN676 and EN267 European standards and with the following directives:
  - 2014/35/UE Low Voltage Directive
  - 2014/30/UE EMC Directive
  - 2016/426/UE Gas Appliances Regulation
  - 2006/42/EC Machinery Directive
  - 2011/65/EU RoHS2 Directive

PRODUCT LIST

	Gas	Dual fuel	Light oil
N10.12000	● ● ●	● ●	● ●
N10.14000	● ● ●	●	●
N10.16000	○ ● ●	●	●
N11.19000	○ ●		
N11.22000	○ ●		

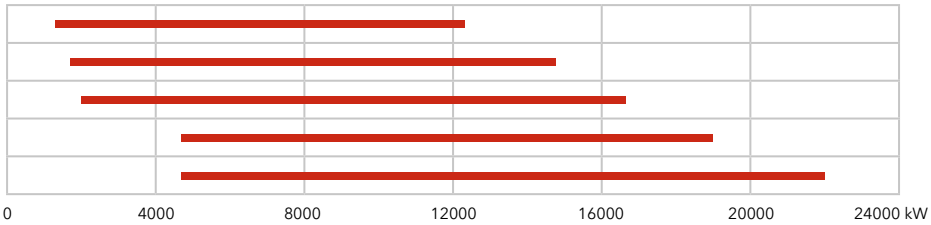

● Class 4 ● Class 3 ● Class 2
○ *in progress*

N

GAS

ULTRA Low NOx

N10 G-EFX

1300 … 14300 kW
Two stage progressive/modulating electronic

NOx <50 mg/kWh

- **Fuels:** natural gas, Hi = 6,99 … 11,39 kWh/Nm³
- **Emission class:** Low NOx class 4 (≤60 mg/kWh) according to EN676
- **Protection level:** IP 41 (IP 54 as option)

TECHNICAL DATA

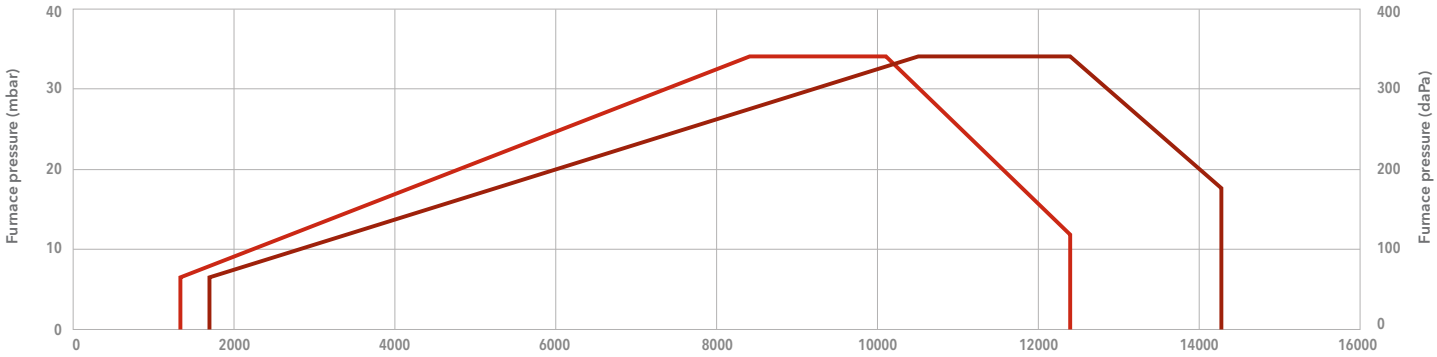

Test conditions conforming to EN676 - Temperature: 20°C - Pressure: 1013,5 mbar - Altitude: 0 m a.s.l.

Power (kW)

	N10.12000.37 G-EFX	N10.14000.45 G-EFX
Operating range	1300 – 12400 kW	1700 – 14300 kW
Gas connection	DN100	DN100
Control box / flame detector	Etamatic OEM / FFS 08 UV-4	Etamatic OEM / FFS 08 UV-4
Fan motor	50/60 Hz – 37 kW	50/60 Hz – 45 kW
Acoustic level	< 95 dB(A)	< 95 dB(A)
Complete burner code	on request	on request

GAS TRAINS

DUNGS

Model	Code
d DN80-DN100	on request
d DN100-DN100	on request
d DN125-DN100	on request

SIEMENS

Model	Code
s DN80-DN100	on request
s DN100-DN100	on request
s DN125-DN100	on request
s DN150-DN100	on request

FILTERS

Model	Code
FG-DN80	3757201
FG-DN100	3757195
FG-DN125	3757209
FG-DN150	3757210

i **Pressure drops graphs**: see following pages
Dimensions of gas trains and gas filters: see page 312

DIMENSIONS (mm)

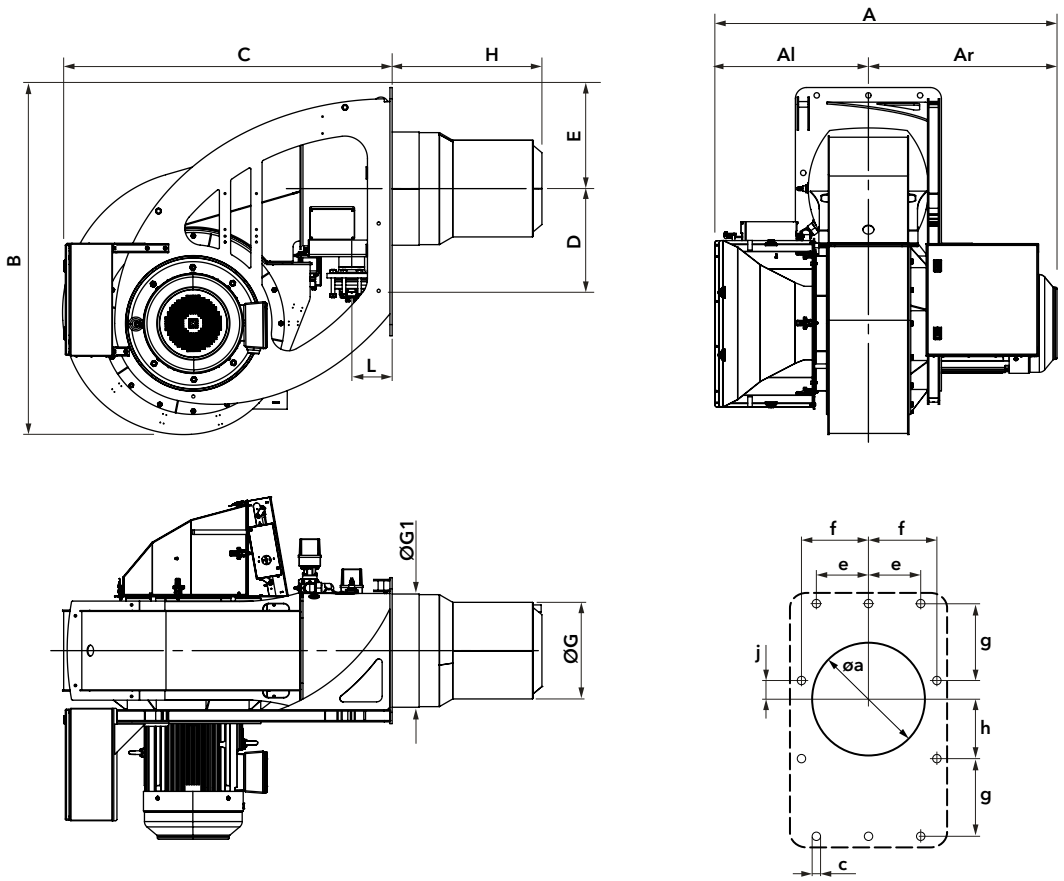

Model	A	Al	Ar	B	C	D	E	ØG	ØG1	H	L	Øa	c	e	f	g	h	j
N10.12000.37 G-EFX	1441	683	758	1545	1467	446	450	430	504	667*	180	525	M20	230	290	345	275	70
N10.14000.45 G-EFX	1530	683	847	1545	1467	446	450	467	504	667*	180	525	M20	230	290	345	275	70

*: different length on request

PACKAGING

The burner is delivered on a pallet with:
- burner body with mounted combustion head
- gas train and filter
- boiler fixing accessories
- technical documentation

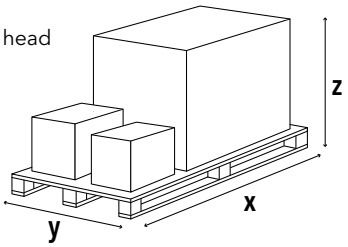

Model	Dimensions (mm)			Gross weight (kg)
	X	Y	Z	
N10.12000.37 G-EFX	2200	1800	1900	1000
N10.14000.45 G-EFX	2200	1800	1900	1070

N10 G-EFX

1300 ... 14300 kW
Two stage progressive/modulating electronic

PRESSURE LOSS [BURNER HEAD + GAS TRAIN] (mbar)

N10.12000.37 G-EFX

DUNGS

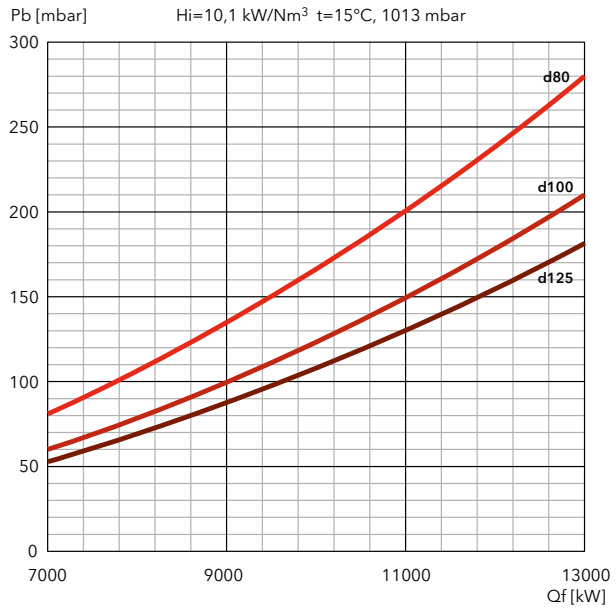

SIEMENS

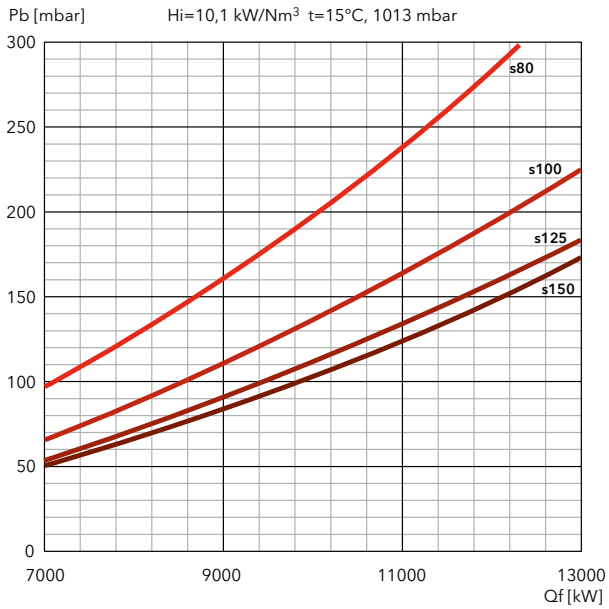

FILTERS

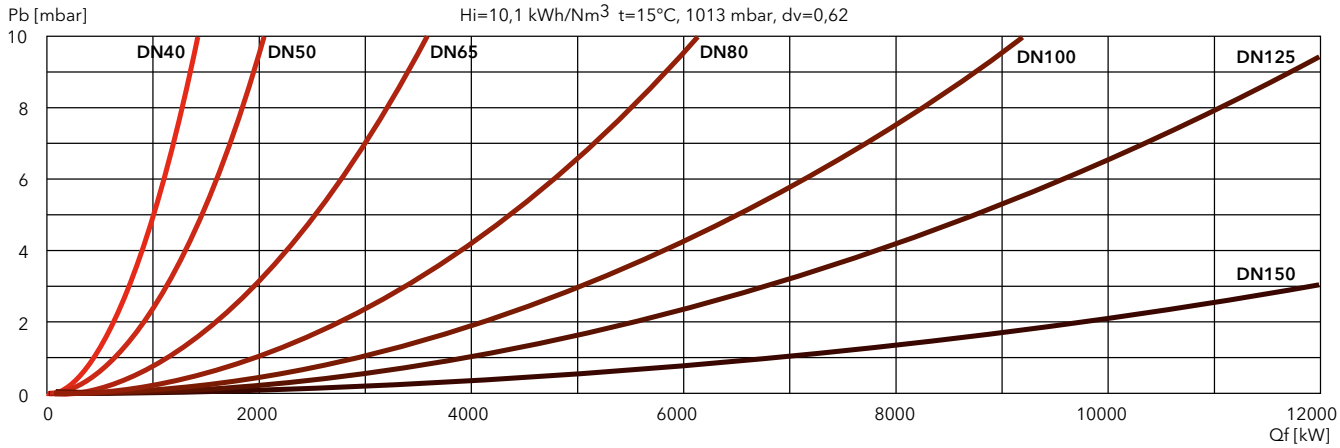

PRESSURE LOSS [BURNER HEAD + GAS TRAIN] (mbar)

N10.14000.45 G-EFX

DUNGS

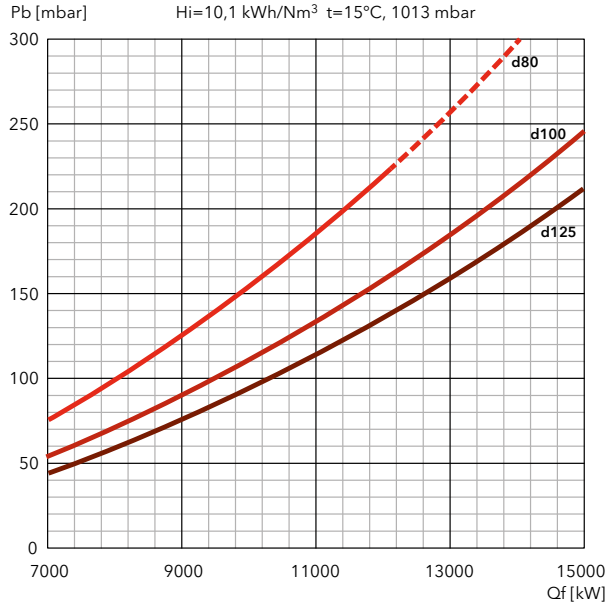

SIEMENS

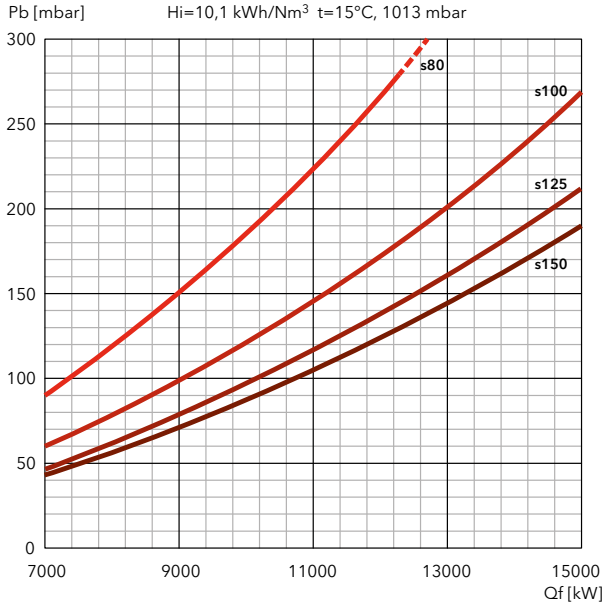

FILTERS

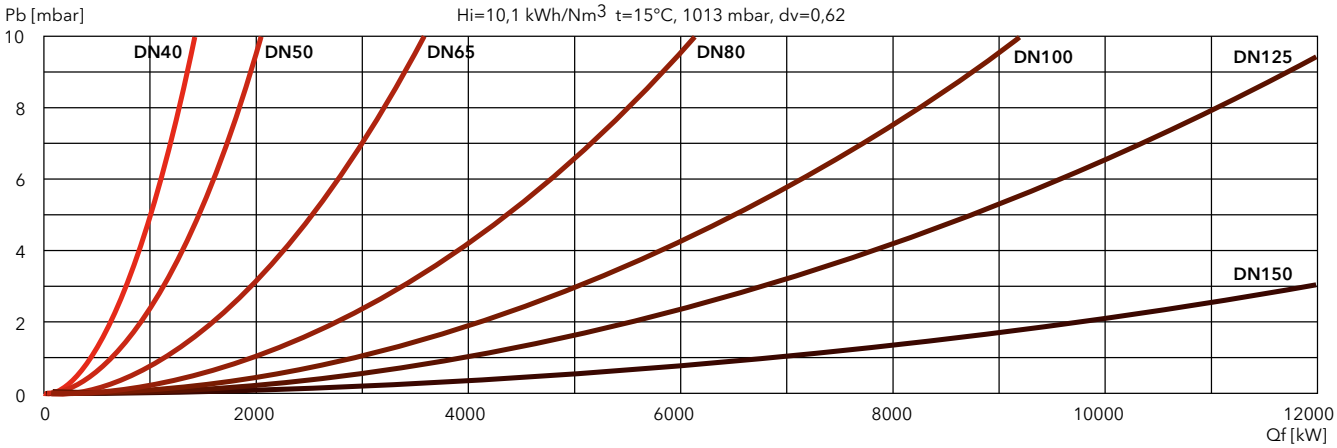

N

GAS

Low NOx Class 3

N10 G-EU2

1500 … 16350 kW
Two stage progressive/modulating electronic

- **Fuels:** natural gas, Hi = 6,99 … 11,39 kWh/m³
- **Emission class:** Low NOx class 3 (≤80 mg/kWh) according to EN676
- **Addtional configuration:** models with FGR System (≤30 mg/kWh) available on request
- **Protection level:** IP 40 (IP 51 as option)

TECHNICAL DATA

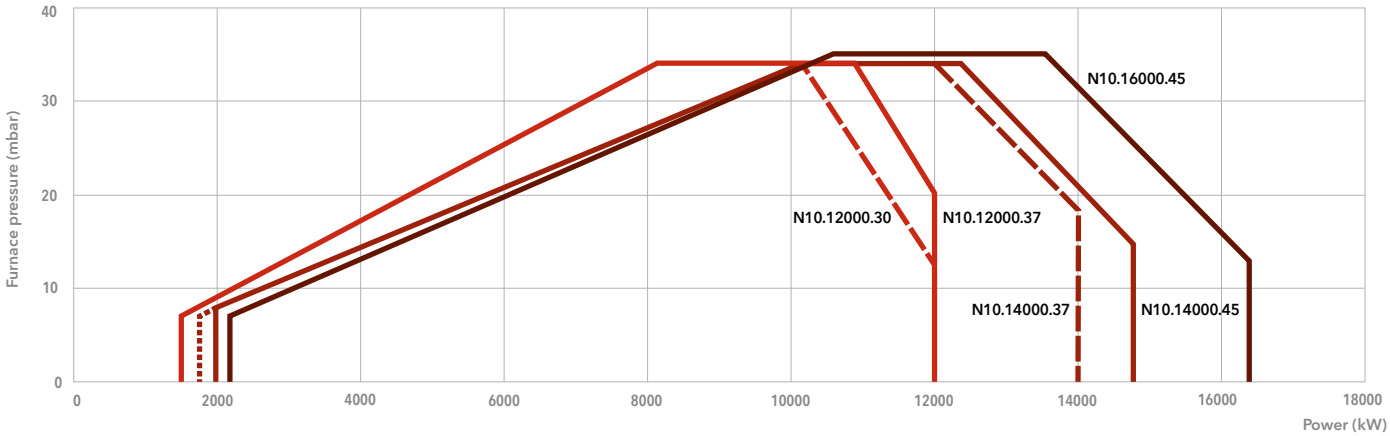

	N10.12000.30 G-EU2	N10.12000.37 G-EU2	N10.14000.37 G-EU2	N10.14000.45 G-EU2	N10.16000.45 G-EU2
Operating range	1500 – 12300 kW	1500 – 12300 kW	2000* – 14000 kW (*: 1750 with FQe)	2000* – 14800 kW (*: 1750 with FQe)	2150 – 16350 kW
Gas connection	DN100	DN100	DN100	DN100	DN100
Control box / flame detector	Etamatic OEM / FFS 08	Etamatic OEM / FFS 08	Etamatic OEM / FFS 08	Etamatic OEM / FFS 08	Etamatic OEM / FFS 08
Fan motor	50/60 Hz – 30 kW	50/60 Hz – 37 kW	50/60 Hz – 37 kW	50/60 Hz – 45 kW	50/60 Hz – 45 kW
Acoustic level	< 94 dB(A)	< 95 dB(A)	< 95 dB(A)	< 96 dB(A)	< 96 dB(A)
Complete burner code	on request	on request	on request	on request	on request

FQe = external frequency converter

GAS TRAINS

Gas inlet from the left side

Model	Code
s DN80-DN100	3757950
s DN100-DN100	3758623
s DN125-DN100	3760344
s DN150-DN100	3761042

Gas inlet from the right side

Model	Code
s DN80-DN100	3758624
s DN100-DN100	3757952
s DN125-DN100	3761040
s DN150-DN100	3761041

FILTERS

Model	Code
FG-DN80	3757201
FG-DN100	3757195
FG-DN125	3757209
FG-DN150	3757210

i **Pressure drops graphs**: see following pages
Dimensions of gas trains and gas filters: see page 312

DIMENSIONS (mm)

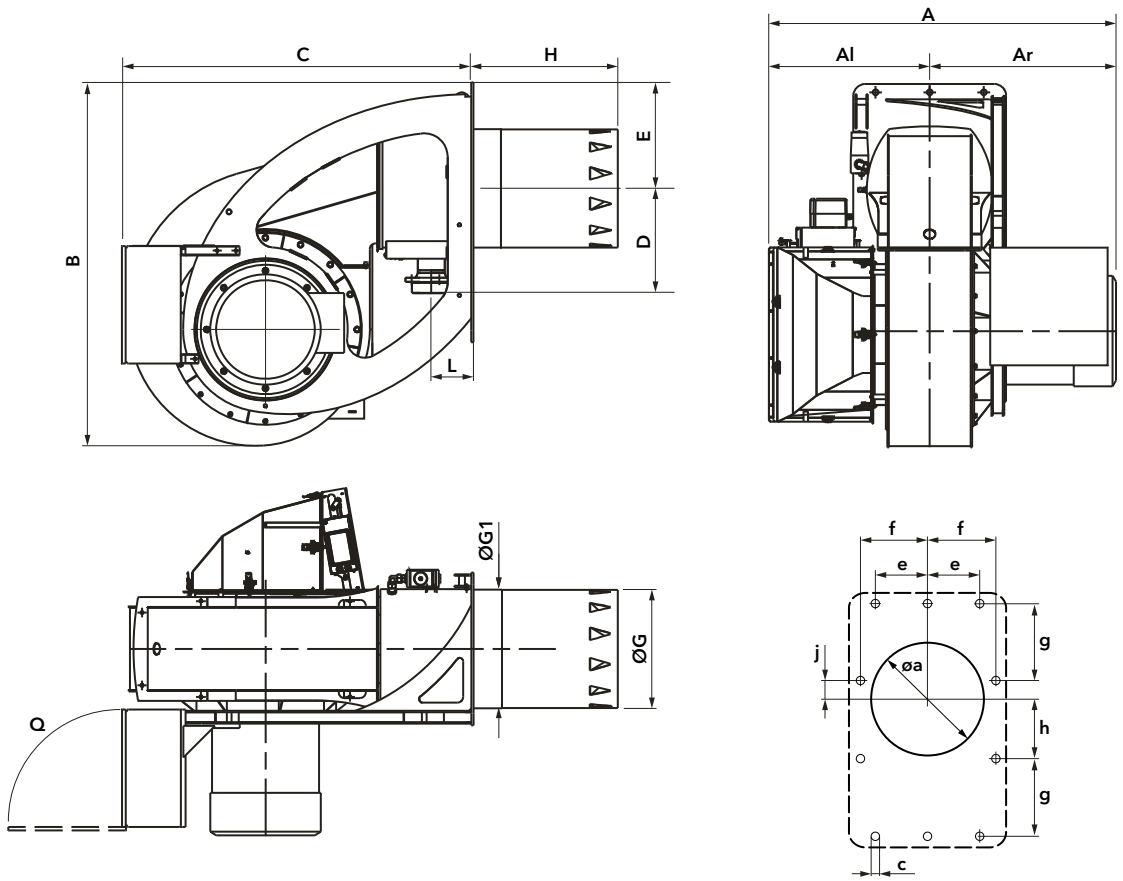

Model	A	Al	Ar	B	C	D	E	ØG	ØG1	H	L	Q	Øa	c	e	f	g	h	j
N10.12000.30 G-EU2	1441	683	758	1545	1494	446	450	497	504	620*	180	800	525	M20	230	290	345	275	70
N10.12000.37 G-EU2	1441	683	758	1545	1494	446	450	497	504	620*	180	800	525	M20	230	290	345	275	70
N10.14000.37 G-EU2	1441	683	758	1545	1494	446	450	497	504	620*	180	800	525	M20	230	290	345	275	70
N10.14000.45 G-EU2	1530	683	847	1545	1494	446	450	497	504	620*	180	800	525	M20	230	290	345	275	70
N10.16000.45 G-EU2	1530	683	847	1545	1494	446	450	497	504	620*	180	800	525	M20	230	290	345	275	70

*: different length on request

PACKAGING

The burner is delivered on a pallet with:
- burner body with mounted combustion head
- gas train and filter
- boiler fixing accessories
- technical documentation

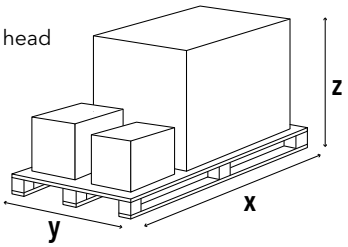

Model	Dimensions (mm)			Gross weight (kg)
	X	Y	Z	
N10... G-EU2	2200	1800	1900	1000

N10 G-EU2

1500 ... 16350 kW
Two stage progressive/modulating electronic

PRESSURE LOSS [BURNER HEAD + GAS TRAIN] (mbar)

N10.12000 G-EU2

DUNGS

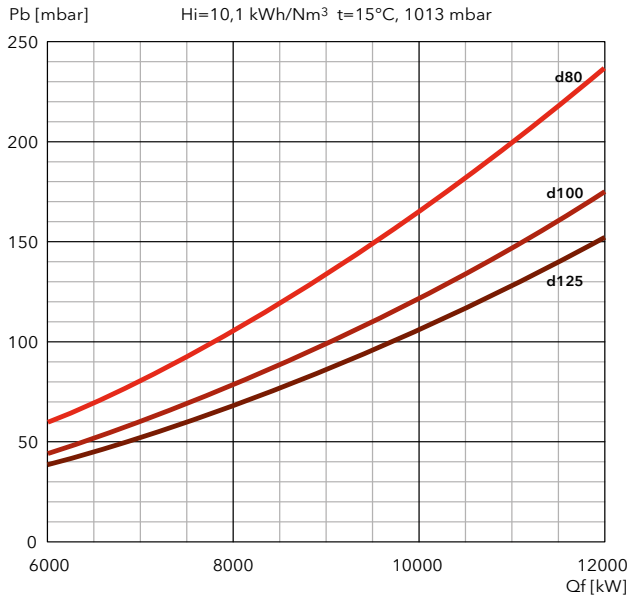

SIEMENS

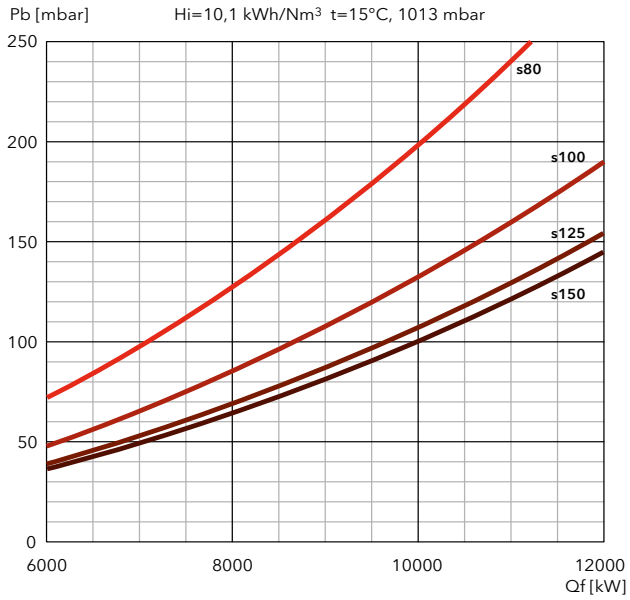

N10.14000 G-EU2

DUNGS

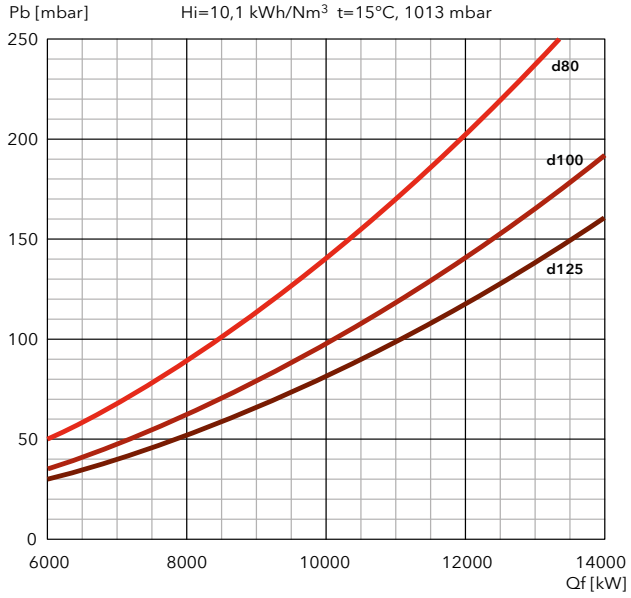

SIEMENS

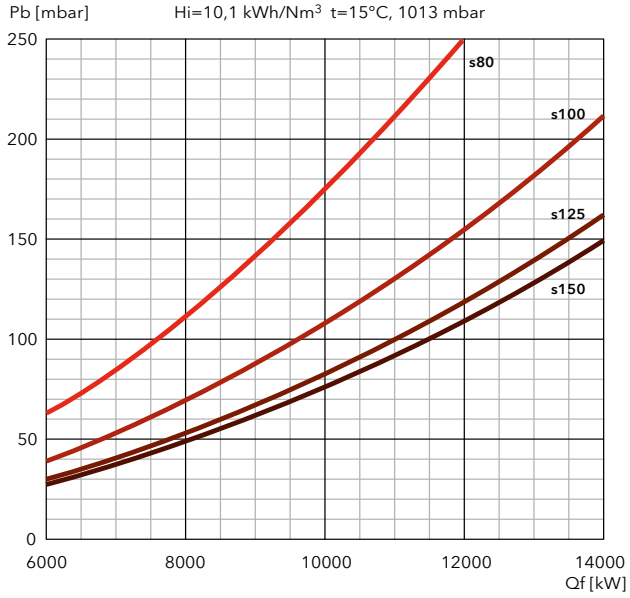

PRESSURE LOSS [BURNER HEAD + GAS TRAIN] (mbar)

N10.16000 G-EU2

DUNGS

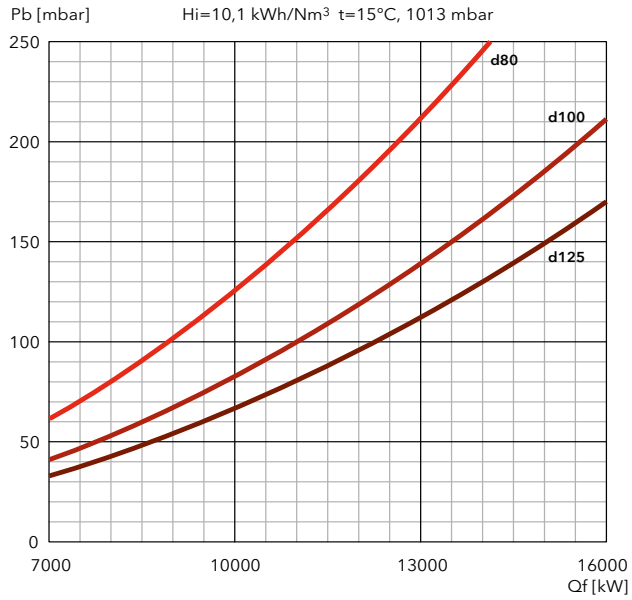

SIEMENS

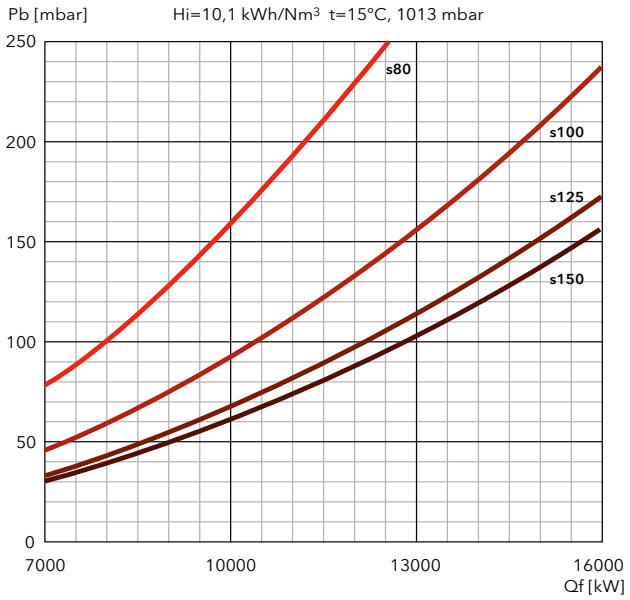

FILTERS

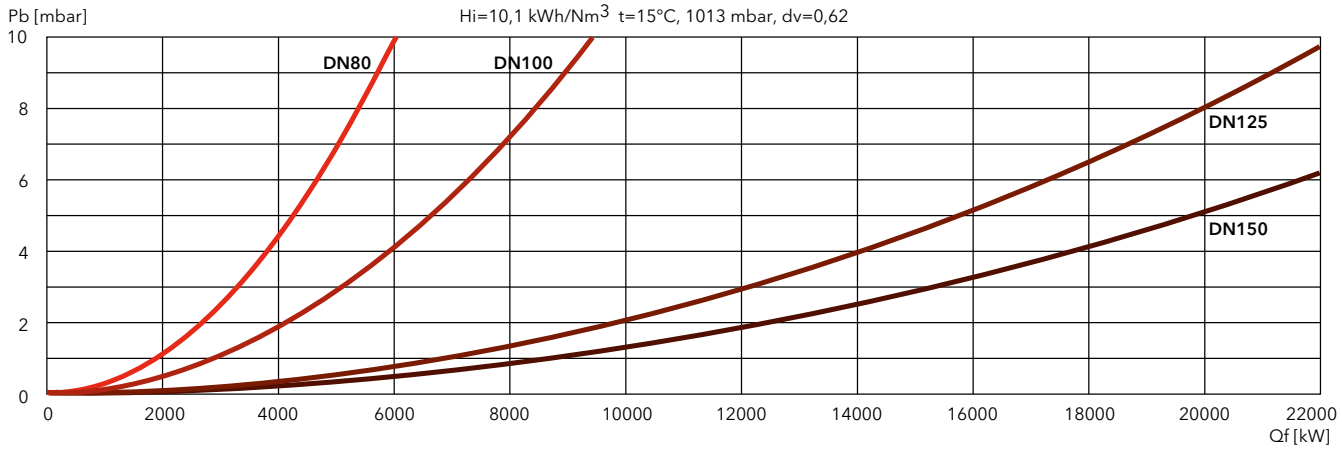

N

GAS

Low NOx Class 3

N11 G-EU2

2750 … 22000 kW
Two stage progressive/modulating electronic

- **Fuels:** natural gas, Hi = 6,99 … 11,39 kWh/m³
- **Emission class:** Low NOx class 3 (≤80 mg/kWh) according to EN676
- **Addtional configuration:** models with FGR System (≤30 mg/kWh) available on request
- **Protection level:** IP 40 (IP 54 as option)

TECHNICAL DATA

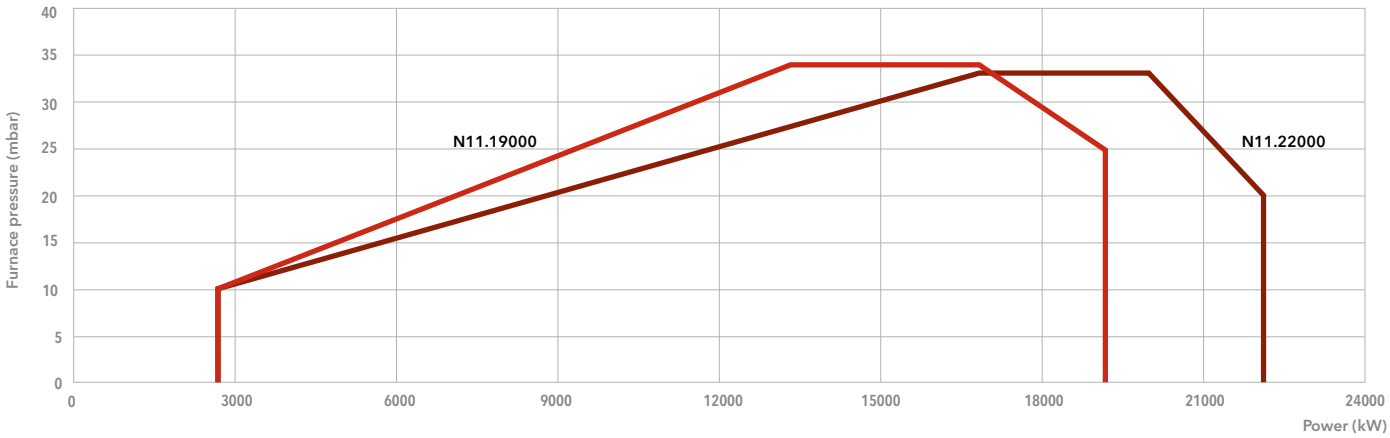

	N11.19000.55 G-EU2	N11.22000.75 G-EU2
Operating range	2750 – 19000 kW	2750 – 22000 kW
Gas connection	DN125	DN125
Control box / flame detector	Etamatic OEM / FFS 08	Etamatic OEM / FFS 08
Fan motor	50/60 Hz – 55 kW	50/60 Hz – 75 kW
Acoustic level	< 96,5 dB(A)	< 96,5 dB(A)
Complete burner code	on request	on request

GAS TRAINS

Gas inlet from the left side

Model	Code
s DN100-DN100	3761110
s DN125-DN100	3761111
s DN150-DN100	3761112

Gas inlet from the right side

Model	Code
s DN100-DN100	3761107
s DN125-DN100	3761108
s DN150-DN100	3761109

FILTERS

Model	Code
FG-DN100	3757195
FG-DN125	3757209
FG-DN150	3757210

i **Pressure drops graphs**: see following pages
Dimensions of gas trains and gas filters: see page 313

DIMENSIONS (mm)

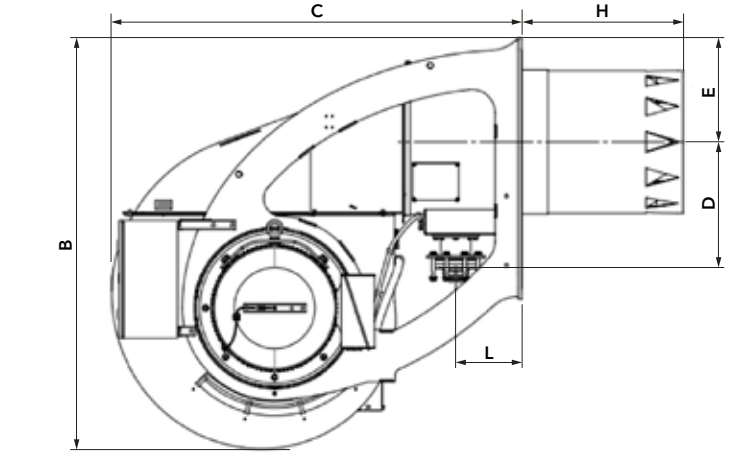

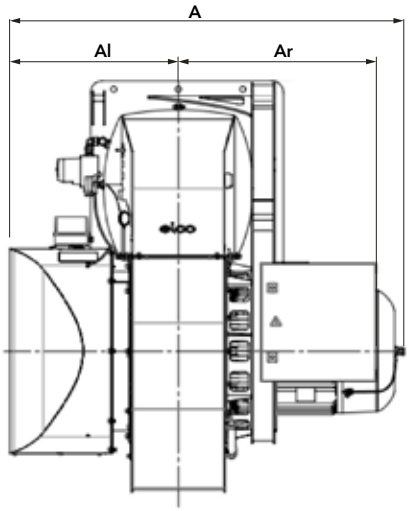

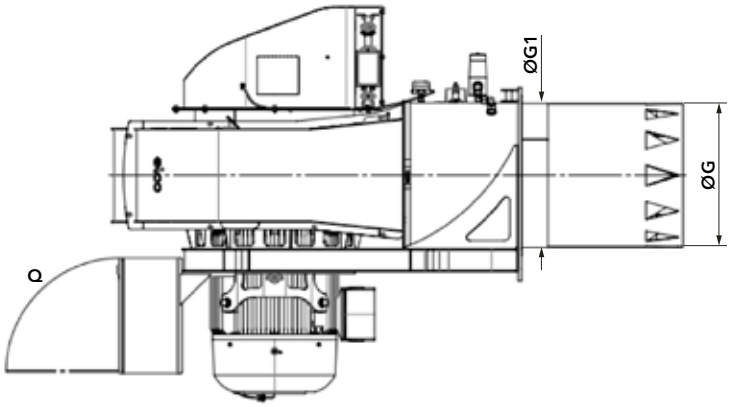

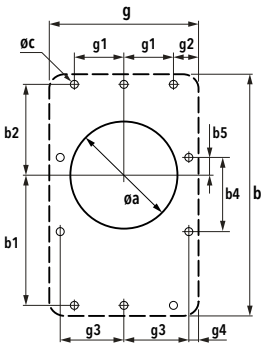

Model	A	Al	Ar	B	C	D	E	ØG	ØG1	H			L	Q	Øa	b	b1	b2	b4	b5	c	g	g1	g2	g3	g4
										KN	KM	KL														
N11.19000	1636	730	858	1780	1777	543	450	617	624	700	850	1000	285	800	645	1130	645	415	345	45	M20	836	280	176	345	111
N11.22000	1709	730	858	1780	1777	543	450	617	624	700	850	1000	285	800	645	1130	645	415	345	45	M20	836	280	176	345	111

PACKAGING

The burner is delivered on a pallet with:
- burner body with mounted combustion head
- gas train and filter
- boiler fixing accessories
- technical documentation

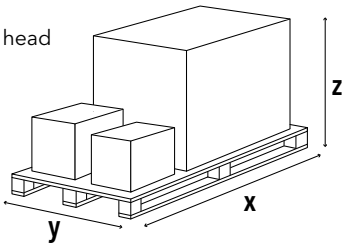

Model	Dimensions (mm)			Gross weight (kg)
	X	Y	Z	
N11... G-EU2	dimensions and weight depending on configuration			

N11 G-EU2

2750 ... 22000 kW
Two stage progressive/modulating electronic

PRESSURE LOSS [BURNER HEAD + GAS TRAIN] (mbar)

N11.19000 G-EU2

DUNGS

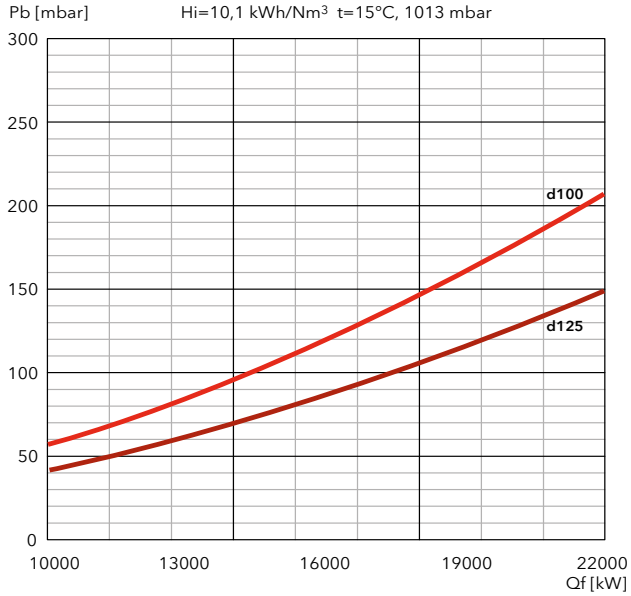

SIEMENS

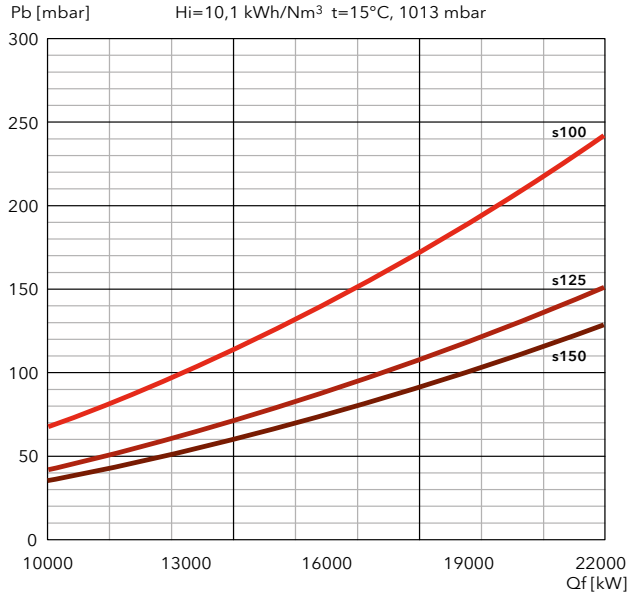

FILTERS

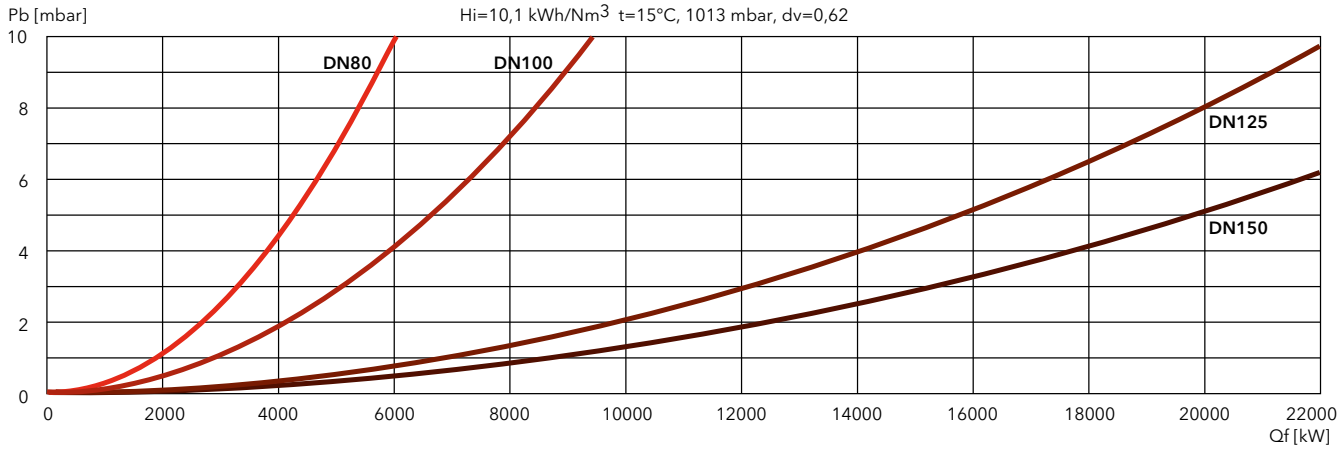

PRESSURE LOSS [BURNER HEAD + GAS TRAIN] (mbar)

N11.22000 G-EU2

DUNGS

SIEMENS

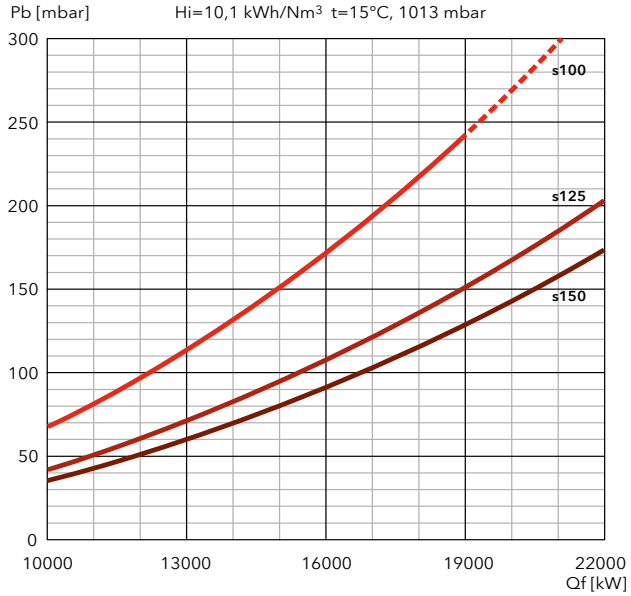

FILTERS

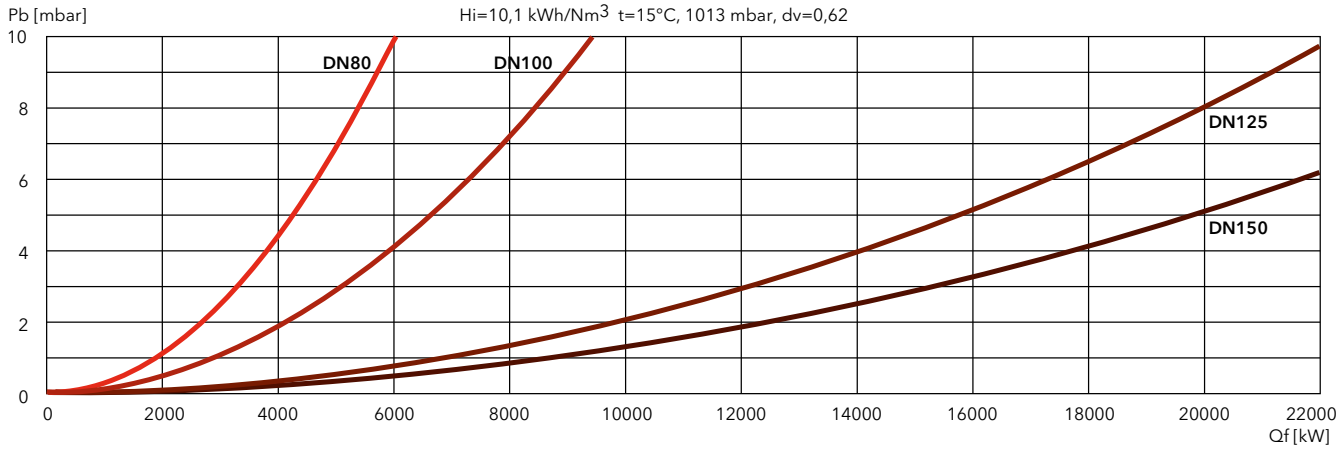

N

GAS

Low NOx Class 2

N10 G-E

1300 … 16000 kW
Two stage progressive/modulating electronic

- **Fuels:** natural gas, Hi = 6,99 … 11,39 kWh/m³
- **Emission class:** Low NOx class 2 (≤120 mg/kWh) according to EN676
- **Protection level:** IP 54

TECHNICAL DATA

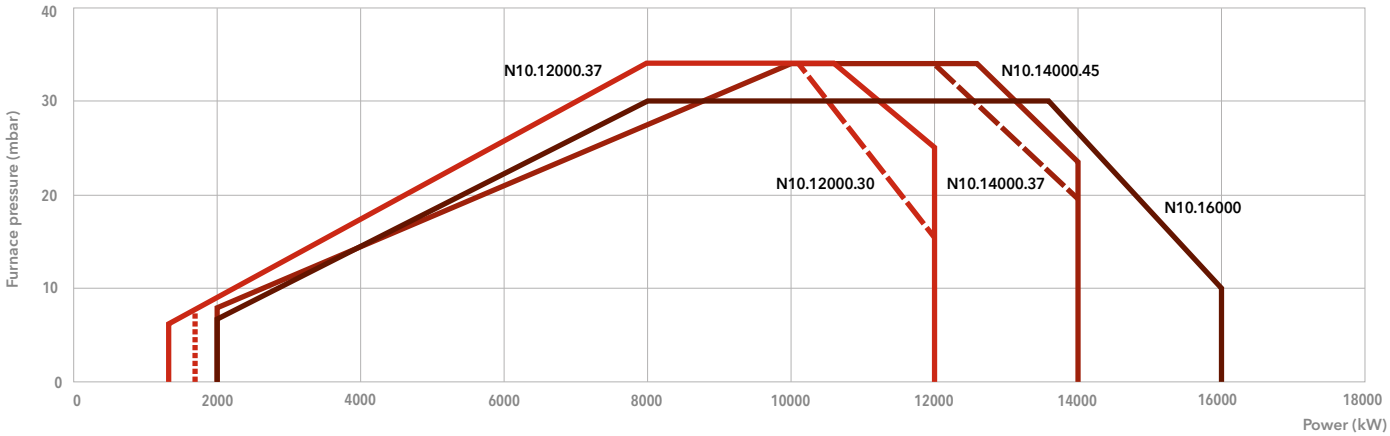

	N10.12000.30 G-E	N10.12000.37 G-E	N10.14000.37 G-E	N10.14000.45 G-E	N10.16000.45 G-E	N10.16000.55 G-E
Operating range	1750* – 12000 kW (*: 1300 with FQe)	1750* – 12000 kW (*: 1300 with FQe)	2000 – 14000 kW	2000 – 14000 kW	2000 – 16000 kW	2000 – 16000 kW
Gas connection	DN100	DN100	DN100	DN100	DN100	DN100
Control box / flame detector	Etamatic OEM / FFS 08	Etamatic OEM / FFS 08	Etamatic OEM / FFS 08	Etamatic OEM / FFS 08	Etamatic OEM / FFS 08	Etamatic OEM / FFS 08
Fan motor	50/60 Hz – 30 kW	50/60 Hz – 37 kW	50/60 Hz – 37 kW	50/60 Hz – 45 kW	50/60 Hz – 45 kW	50/60 Hz – 55 kW
Acoustic level	< 97 dB(A)	< 97 dB(A)	< 97 dB(A)	< 97 dB(A)	< 97 dB(A)	< 97 dB(A)
Complete burner code	on request	on request	on request	on request	on request	on request

FQe = external frequency converter

GAS TRAINS

Gas inlet from the left side

Model	Code
s DN80-DN100	3757950
s DN100-DN100	3758623
s DN125-DN100	3760344
s DN150-DN100	3761042

Gas inlet from the right side

Model	Code
s DN80-DN100	3758624
s DN100-DN100	3757952
s DN125-DN100	3761040
s DN150-DN100	3761041

FILTERS

Model	Code
FG-DN80	3757201
FG-DN100	3757195
FG-DN125	3757209
FG-DN150	3757210

i **Pressure drops graphs**: see following pages
Dimensions of gas trains and gas filters: see page 312

DIMENSIONS (mm)

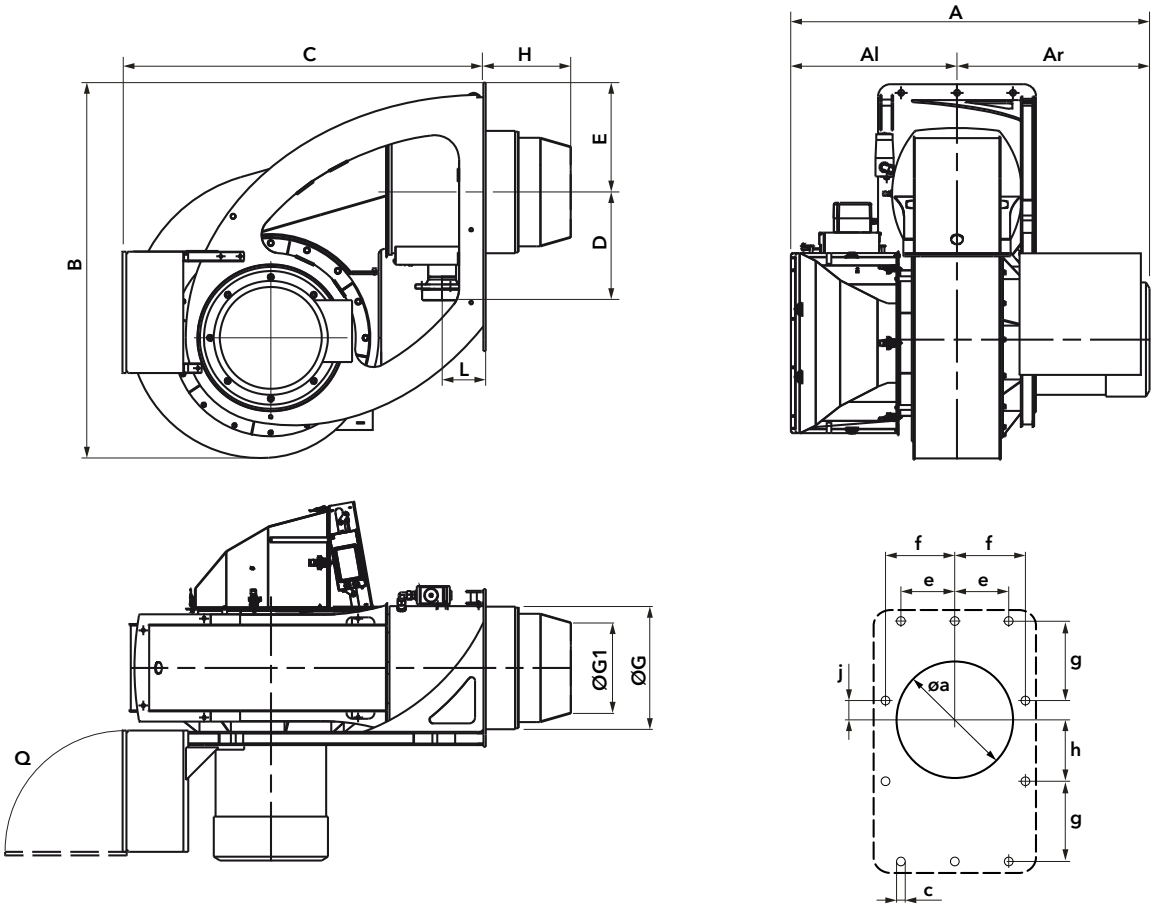

Model	A	Al	Ar	B	C	D	E	ØG	ØG1	H	L	Q	Øa	c	e	f	g	h	j
N10.12000... G-E	1441	683	758	1545	1494	446	450	504	375	350*	180	800	525	M20	230	290	345	275	70
N10.14000.37 G-E	1441	683	758	1545	1494	446	450	504	425	350*	180	800	525	M20	230	290	345	275	70
N10.14000.45 G-E	1530	683	847	1545	1494	446	450	504	425	350*	180	800	525	M20	230	290	345	275	70
N10.16000.45 G-E	1530	683	847	1545	1494	446	450	504	425	350*	180	800	525	M20	230	290	345	275	70
N10.16000.55 G-E	1560	683	877	1545	1494	446	450	504	425	350*	180	800	525	M20	230	290	345	275	70

*: different length on request

PACKAGING

The burner is delivered on a pallet with:
- burner body with mounted combustion head
- gas train and filter
- boiler fixing accessories
- technical documentation

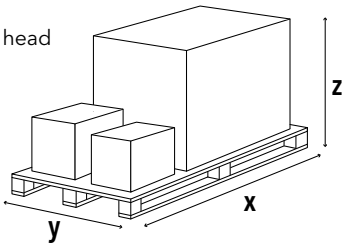

Model	Dimensions (mm)			Gross weight (kg)
	X	Y	Z	
N10... G-E	2200	1800	1900	1000

N10 G-E

1300 ... 16000 kW
Two stage progressive/modulating electronic

PRESSURE LOSS [BURNER HEAD + GAS TRAIN] (mbar)

N10.12000 G-E

DUNGS

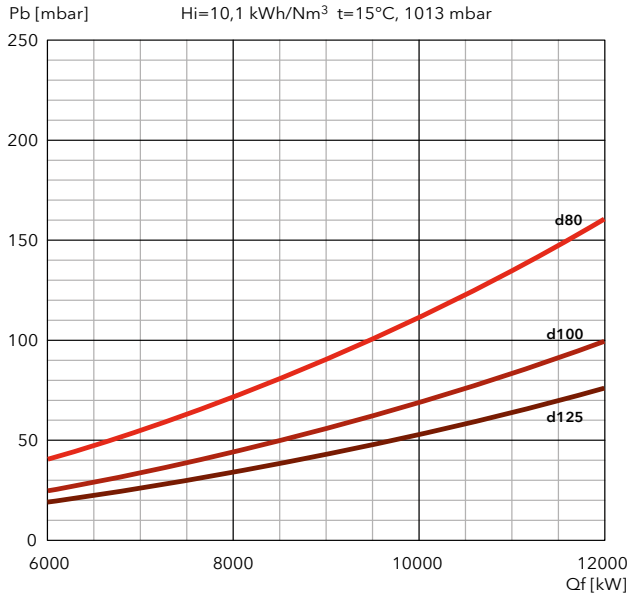

SIEMENS

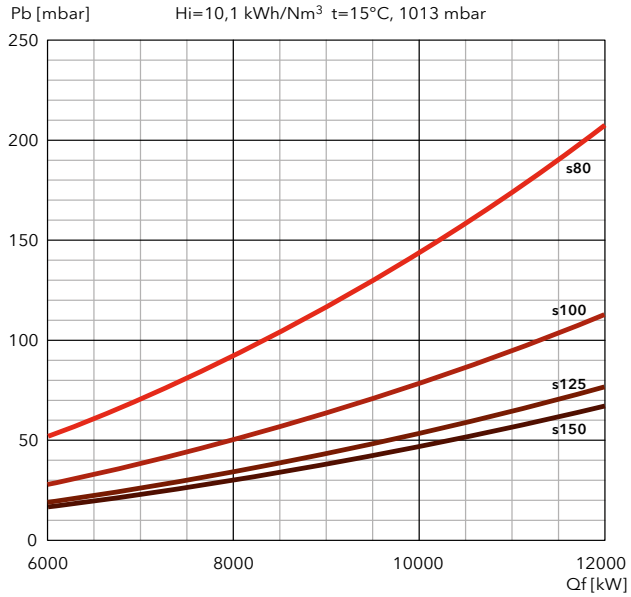

N10.14000 G-E

DUNGS

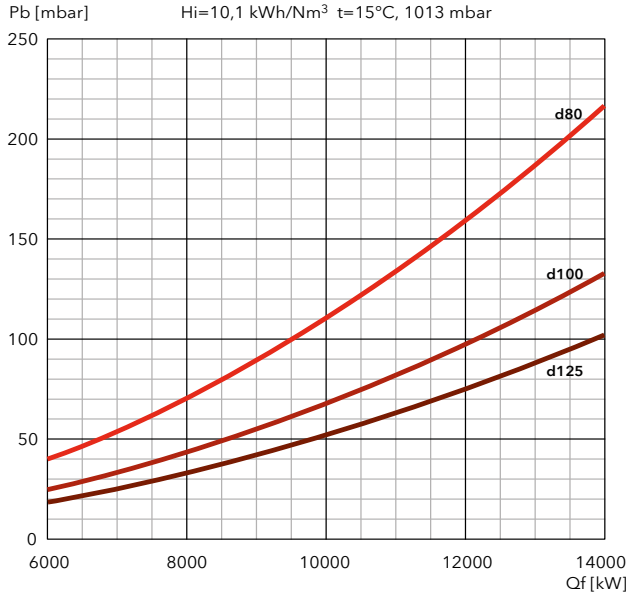

SIEMENS

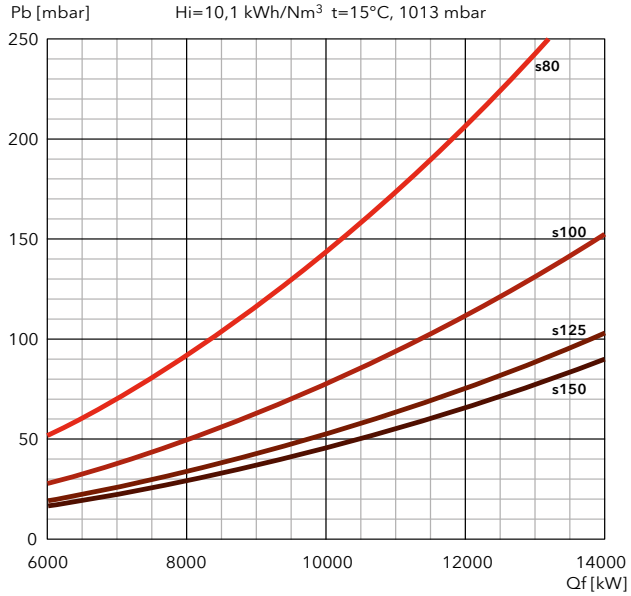

PRESSURE LOSS [BURNER HEAD + GAS TRAIN] (mbar)

N10.16000 G-E

DUNGS

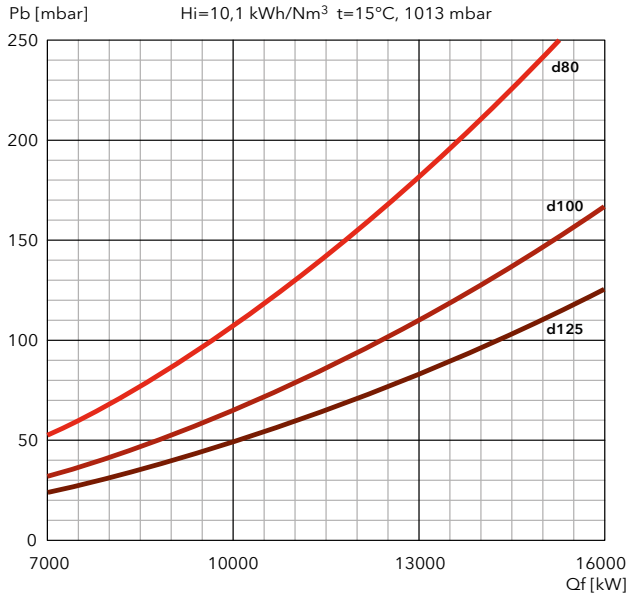

SIEMENS

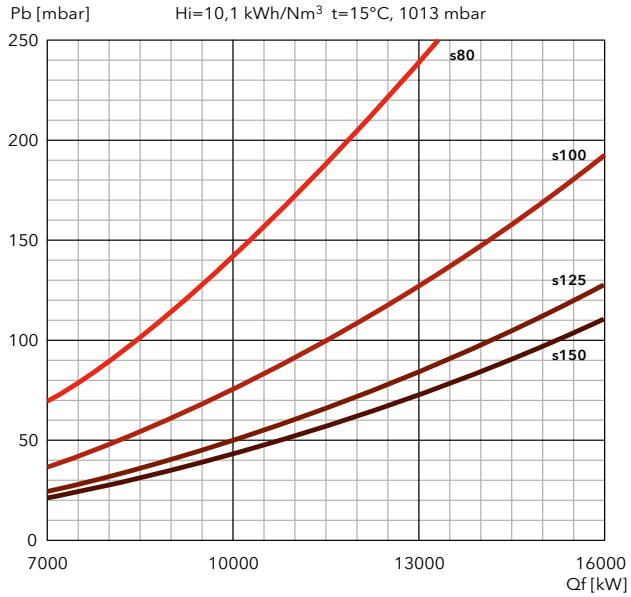

FILTERS

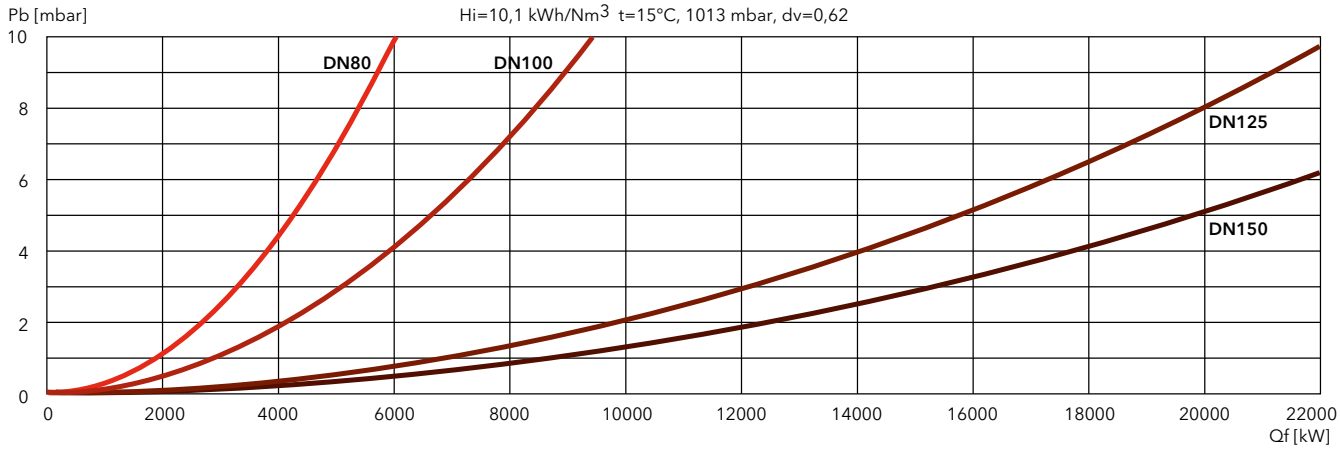

N

GAS / LIGHT OIL

Low NOx Class 3

N10 GL-EUF

1400 … 16250 kW
Two stage progressive/modulating electronic in gas and in light oil

- **Fuels:** natural gas, Hi = 6,99 … 11,39 kWh/Nm³;
  light oil, viscosity 6 mm²/s at 20°C, Hi = 11,86 kWh/kg
- **Emission class:** Low NOx class 3 (≤80 mg/kWh) according to EN676 in gas
  Low NOx class 3 (≤120 mg/kWh) according to EN267 in light oil
- **Addtional configuration:** models with FGR System (≤30 mg/kWh) available on request
- **Protection level:** IP 40 (IP 54 as option)

TECHNICAL DATA

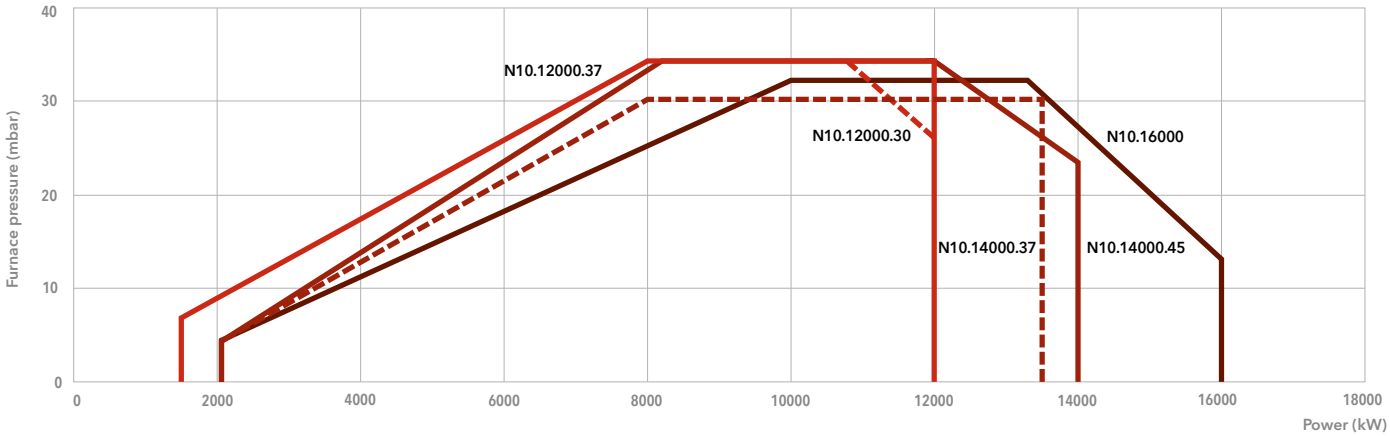

	N10.12000.30 GL-EUF	N10.12000.37 GL-EUF	N10.14000.37 GL-EUF	N10.14000.45 GL-EUF	N10.16000.45 GL-EUF
Operating range gas	1750* – 12000 kW (*: 1500 with FQe)	1750* – 12000 kW (*: 1500 with FQe)	2100 – 13500 kW	2100 – 14000 kW	2100 – 16000 kW
Operating range oil	3000 – 12000 kW	3000 – 12000 kW	3300 – 13500 kW	3300 – 14000 kW	3300 – 16000 kW
Gas connection	DN100	DN100	DN100	DN100	DN100
Control box / flame detector	Etamatic OEM / FFS 08	Etamatic OEM / FFS 08	Etamatic OEM / FFS 08	Etamatic OEM / FFS 08	Etamatic OEM / FFS 08
Fan motor	50/60 Hz – 30 kW	50/60 Hz – 37 kW	50/60 Hz – 37 kW	50/60 Hz – 45 kW	50/60 Hz – 45 kW
Pump	2200 l/h – 4 kW	2200 l/h – 4 kW	2200 l/h – 4 kW	2200 l/h – 4 kW	3600 l/h – 5,5 kW
Acoustic level	< 97 dB(A)	< 97 dB(A)	< 97 dB(A)	< 97 dB(A)	< 97 dB(A)
Complete burner code	on request	on request	on request	on request	on request

FQe = external frequency converter

GAS TRAINS

Gas inlet from the left side

Model	Code
s DN80-DN100	3757950
s DN100-DN100	3758623
s DN125-DN100	3760344
s DN150-DN100	3761042

Gas inlet from the right side

Model	Code
s DN80-DN100	3758624
s DN100-DN100	3757952
s DN125-DN100	3761040
s DN150-DN100	3761041

FILTERS

Model	Code
FG-DN80	3757201
FG-DN100	3757195
FG-DN125	3757209
FG-DN150	3757210

i **Pressure drops graphs**: see following pages
Dimensions of gas trains and gas filters: see page 312

DIMENSIONS (mm)

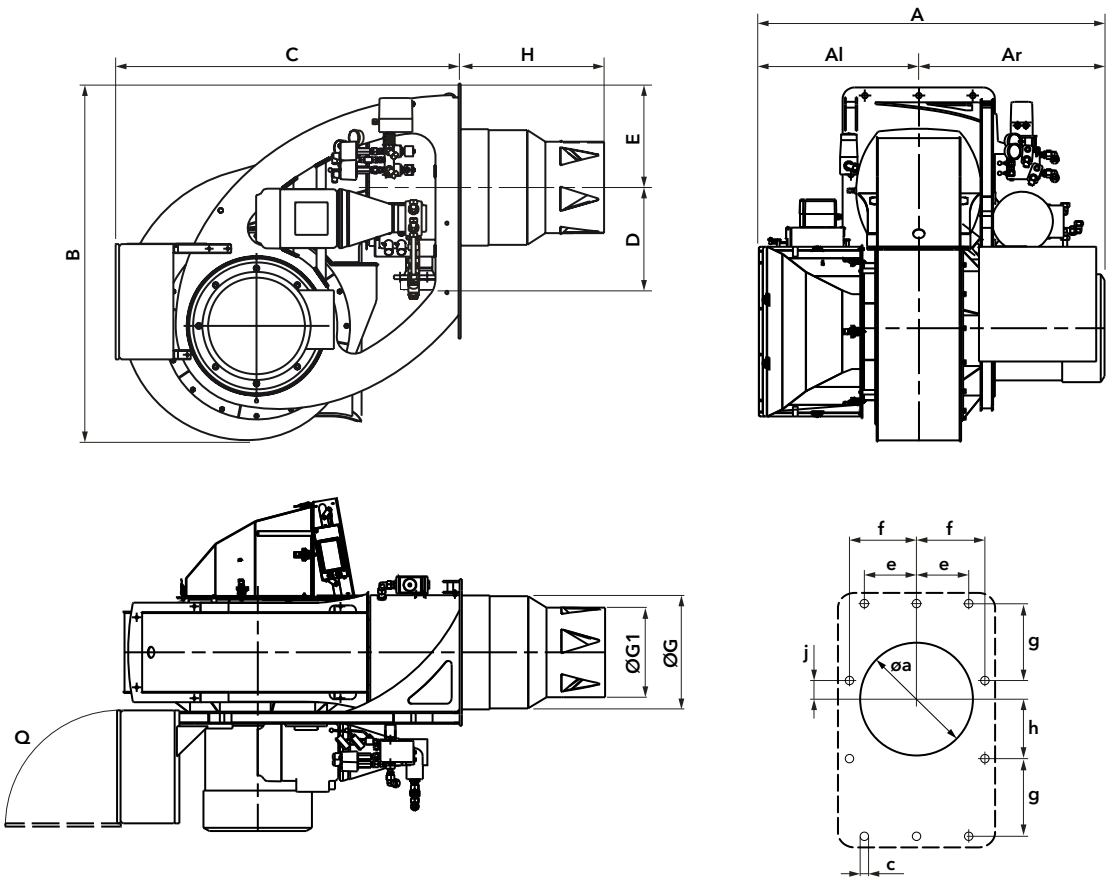

Model	A	Al	Ar	B	C	D	E	ØG	ØG1	H	L	Q	Øa	c	e	f	g	h	j
N10.12000.30 GL-EUF	1441	683	758	1545	1494	446	450	504	396	620*	180	800	525	M20	230	290	345	275	70
N10.12000.37 GL-EUF	1441	683	758	1545	1494	446	450	504	396	620*	180	800	525	M20	230	290	345	275	70
N10.14000.37 GL-EUF	1441	683	758	1545	1494	446	450	504	436	620*	180	800	525	M20	230	290	345	275	70
N10.14000.45 GL-EUF	1530	683	847	1545	1494	446	450	504	436	620*	180	800	525	M20	230	290	345	275	70
N10.16000.45 GL-EUF	1530	683	847	1545	1494	446	450	504	436	620*	180	800	525	M20	230	290	345	275	70

*: different length on request

PACKAGING

The burner is delivered on a pallet with:
- burner body with mounted combustion head
- gas train and filter
- boiler fixing accessories
- technical documentation

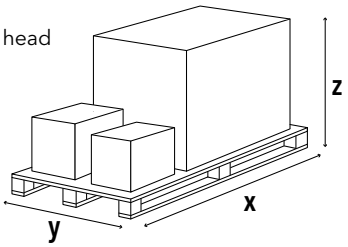

Model	Dimensions (mm)			Gross weight (kg)
	X	Y	Z	
N10... GL-EUF	2200	1800	1900	1000

N10 GL-EUF

1400 ... 16250 kW
Two stage progressive/modulating electronic in gas and in light oil

PRESSURE LOSS [BURNER HEAD + GAS TRAIN] (mbar)

N10.12000 GL-EUF

DUNGS

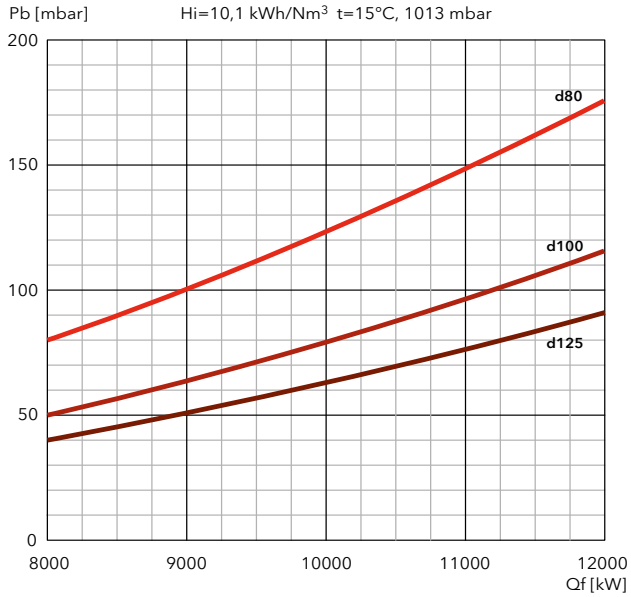

SIEMENS

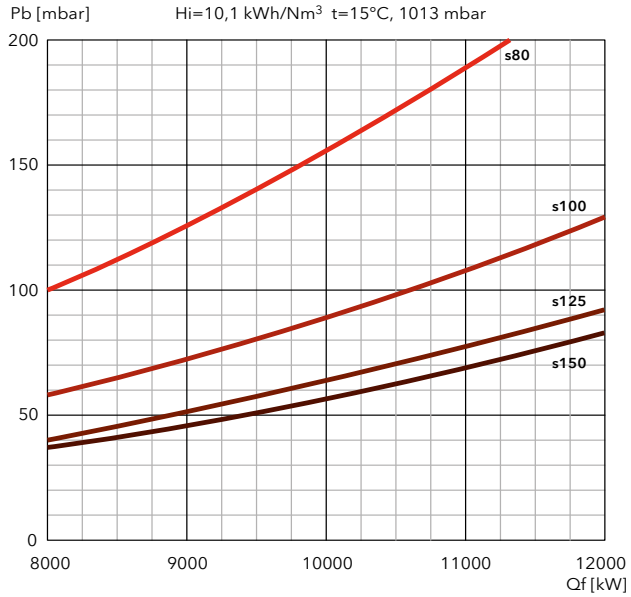

N10.14000 GL-EUF

DUNGS

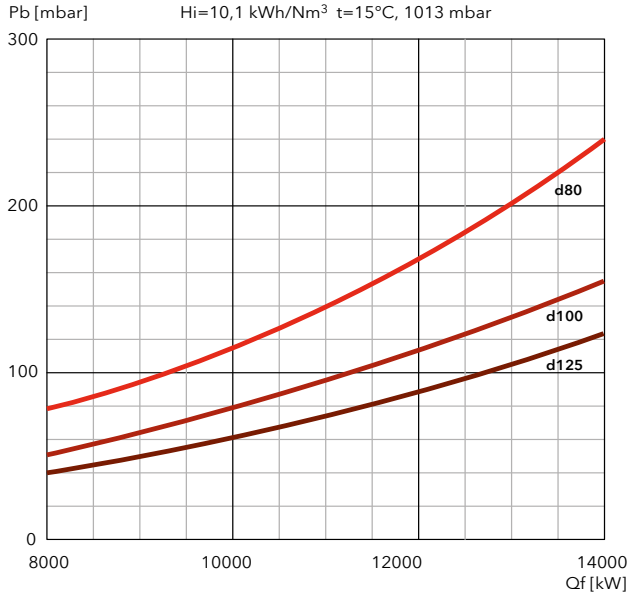

SIEMENS

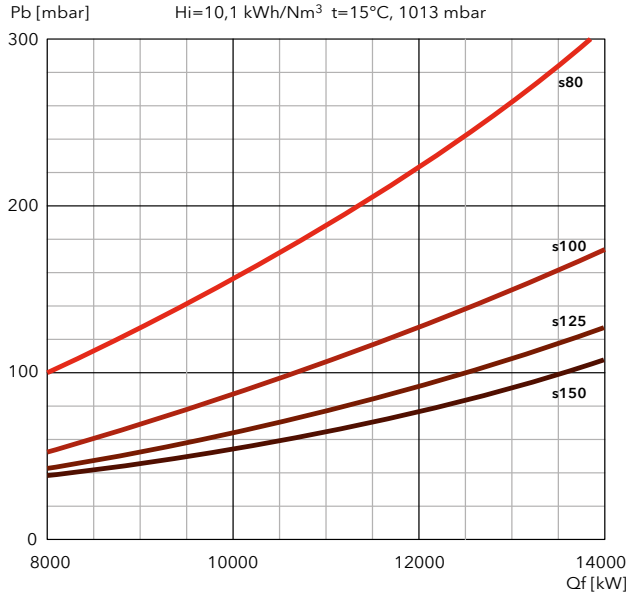

PRESSURE LOSS [BURNER HEAD + GAS TRAIN] (mbar)

N10.16000 GL-EUF

DUNGS

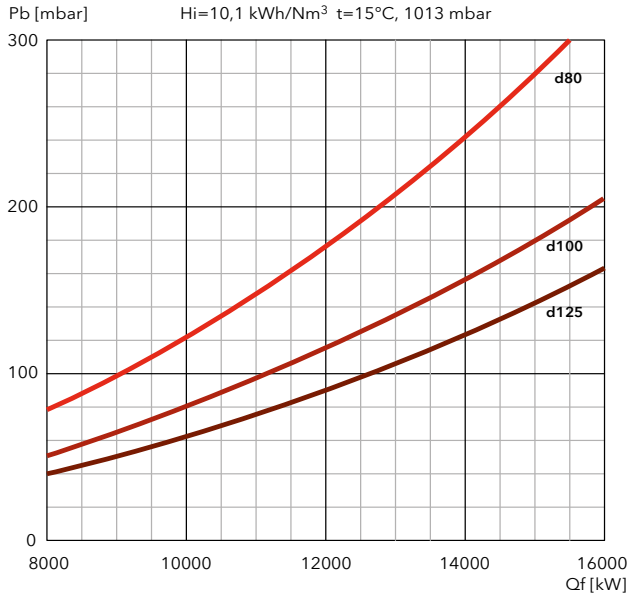

SIEMENS

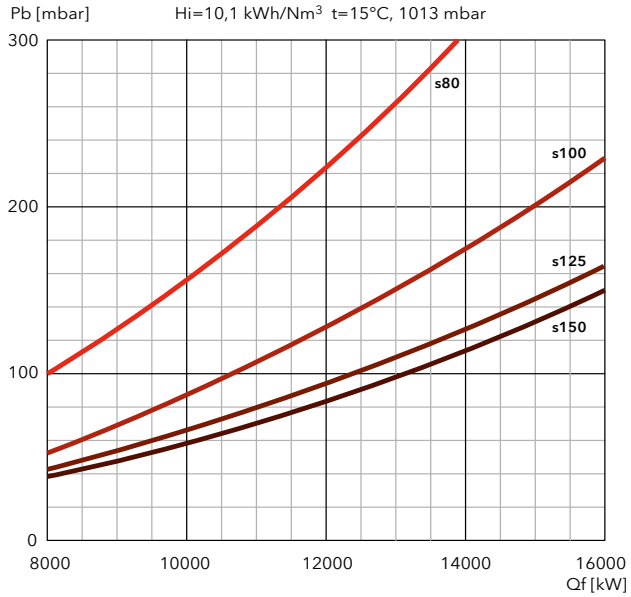

FILTERS

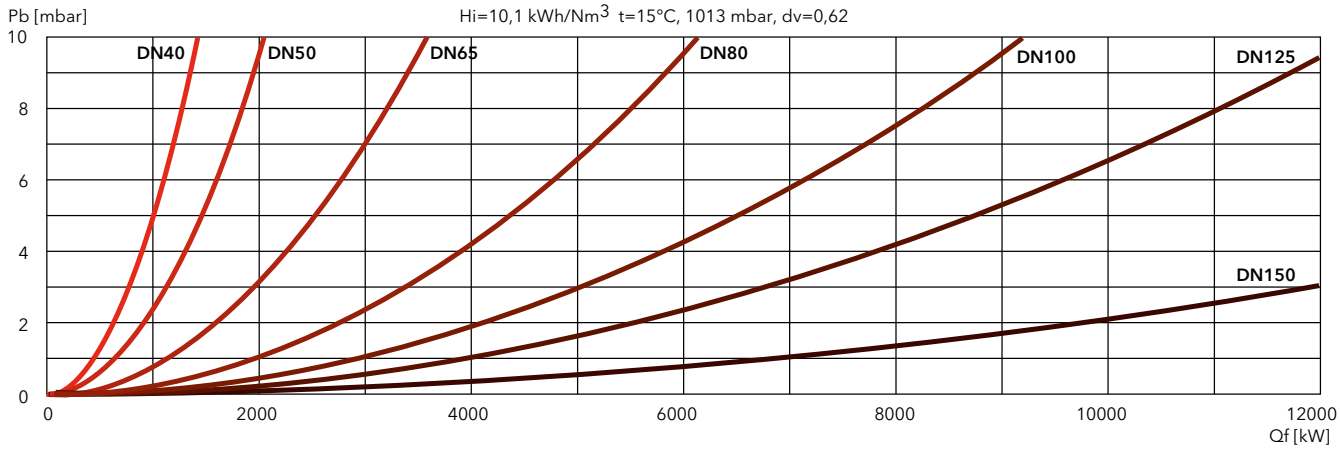

N

GAS / LIGHT OIL

Low NOx Class 2

N10 GL-E

1300 … 12000 kW
Two stage progressive/modulating electronic in gas and in light oil

- **Fuels:** natural gas, Hi = 6,99 … 11,39 kWh/Nm³;
  light oil, viscosity 6 mm²/s at 20°C, Hi = 11,86 kWh/kg
- **Emission class:** Low NOx class 2 (≤120 mg/kWh) according to EN676 in gas
  Low NOx class 2 (≤185 mg/kWh) according to EN267 in light oil
- **Protection level:** IP 54

TECHNICAL DATA

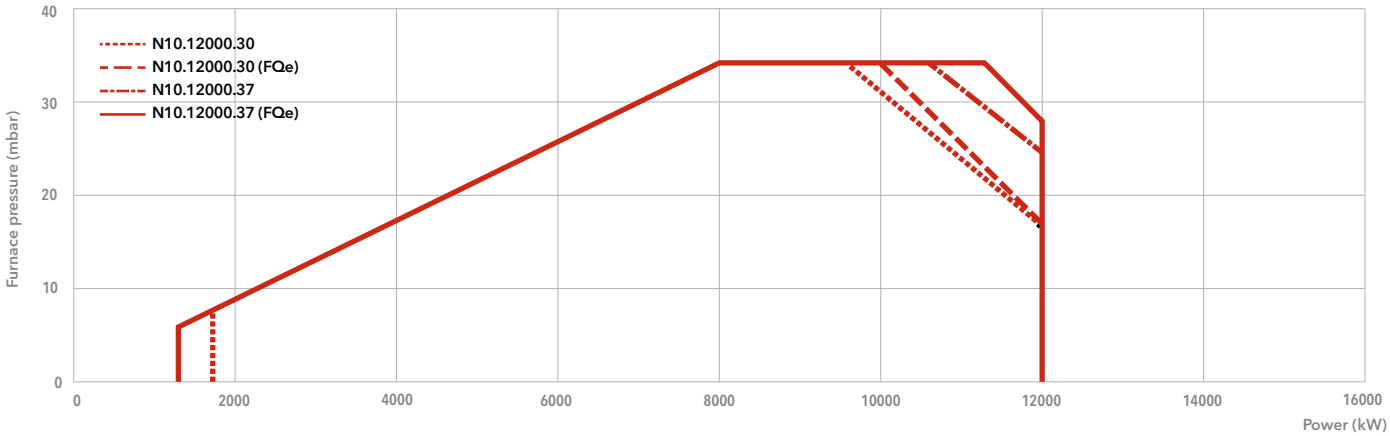

FQe = external frequency converter

	N10.12000.30 GL-E	N10.12000.37 GL-E
Operating range gas	1300* – 12000 kW (*: 1750 without FQ)	1300* – 12000 kW (*: 1750 without FQ)
Operating range oil	3600 – 12000 kW	3600 – 12000 kW
Gas connection	DN100	DN100
Control box / flame detector	Etamatic OEM / FFS 08	Etamatic OEM / FFS 08
Fan motor	50/60 Hz – 30 kW	50/60 Hz – 37 kW
Pump	2700 l/h – 4 kW	2700 l/h – 4 kW
Acoustic level	< 97 dB(A)	< 97 dB(A)
Complete burner code	on request	on request

GAS TRAINS

Gas inlet from the left side

Model	Code
s DN80-DN100	3757950
s DN100-DN100	3758623
s DN125-DN100	3760344
s DN150-DN100	3761042

Gas inlet from the right side

Model	Code
s DN80-DN100	3758624
s DN100-DN100	3757952
s DN125-DN100	3761040
s DN150-DN100	3761041

FILTERS

Model	Code
FG-DN80	3757201
FG-DN100	3757195
FG-DN125	3757209
FG-DN150	3757210

i **Pressure drops graphs**: see following pages
Dimensions of gas trains and gas filters: see page 312

DIMENSIONS (mm)

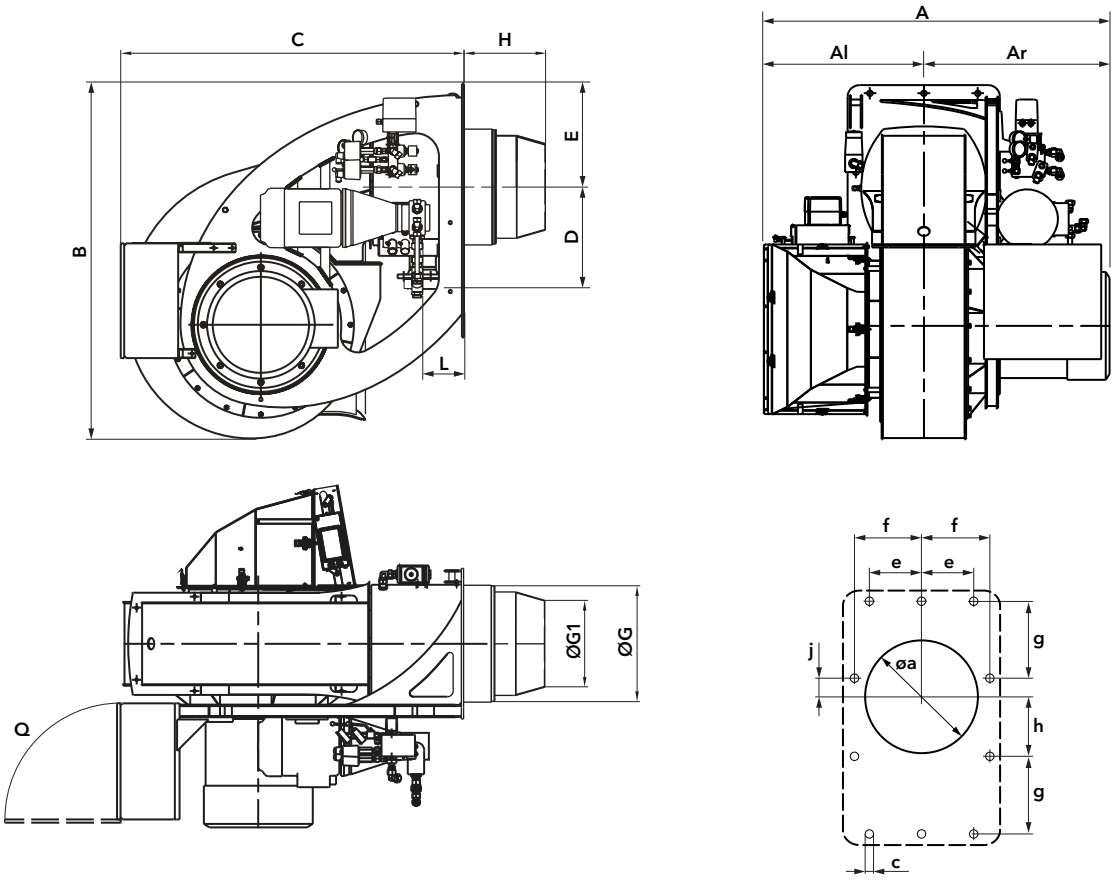

Model	A	Al	Ar	B	C	D	E	ØG	ØG1	H	L	Q	Øa	c	e	f	g	h	j
N10.12000.30 GL-E	1441	683	758	1545	1494	446	450	504	375	350*	180	800	525	M20	230	290	345	275	70
N10.12000.37 GL-E	1441	683	758	1545	1494	446	450	504	375	350*	180	800	525	M20	230	290	345	275	70

*: different length on request

PACKAGING

The burner is delivered on a pallet with:
- burner body with mounted combustion head
- gas train and filter
- boiler fixing accessories
- technical documentation

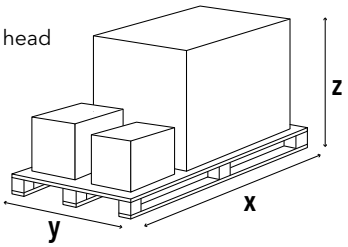

Model	Dimensions (mm)			Gross weight (kg)
	X	Y	Z	
N10... GL-E	2200	1800	1900	1000

N10 GL-E

1300 ... 12000 kW
Two stage progressive/modulating electronic in gas and in light oil

PRESSURE LOSS [BURNER HEAD + GAS TRAIN] (mbar)

N10.12000 GL-E

DUNGS

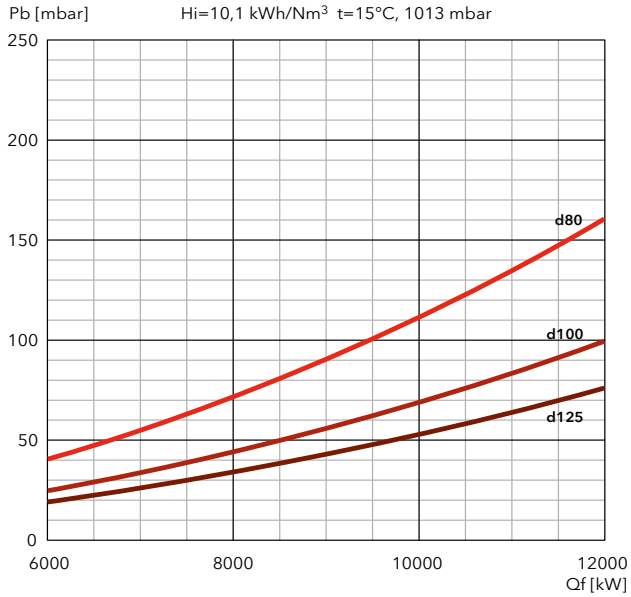

SIEMENS

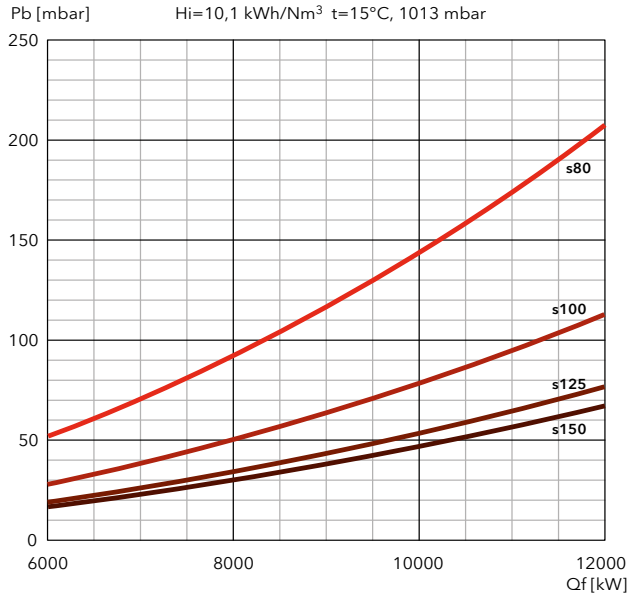

PRESSURE LOSS [BURNER HEAD + GAS TRAIN] (mbar)

FILTERS

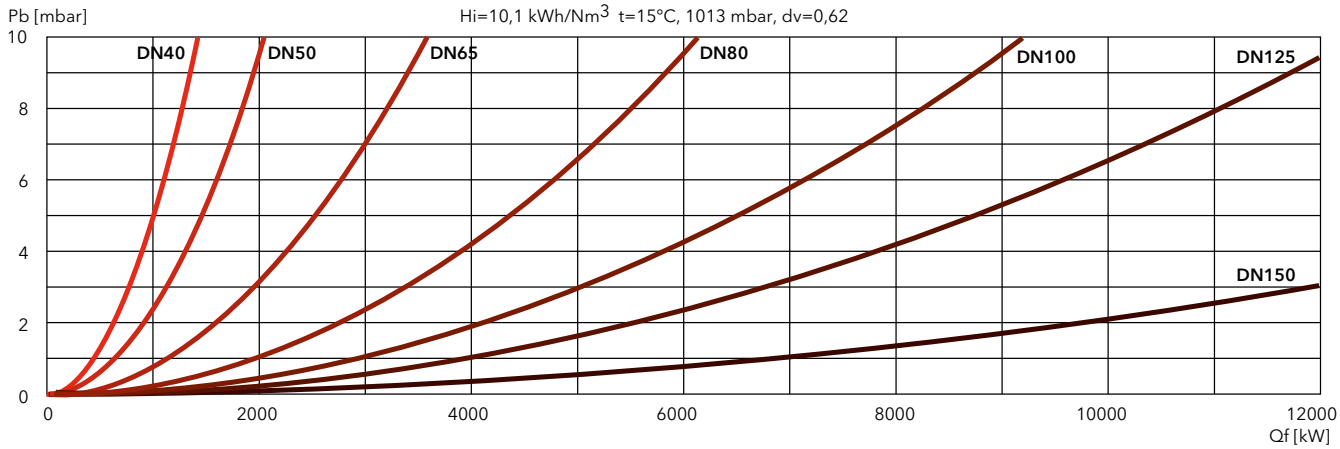

N

LIGHT OIL

Low NOx Class 3

N10 L-EUF

3000 … 16670 kW
Two stage progressive/modulating electronic

- **Fuels:** light oil, viscosity 6 mm²/s at 20°C, Hi = 11,86 kWh/kg
- **Emission class:** Low NOx class 3 (≤120 mg/kWh) according to EN267
- **Protection level:** IP 40 (IP 54 as option)

TECHNICAL DATA

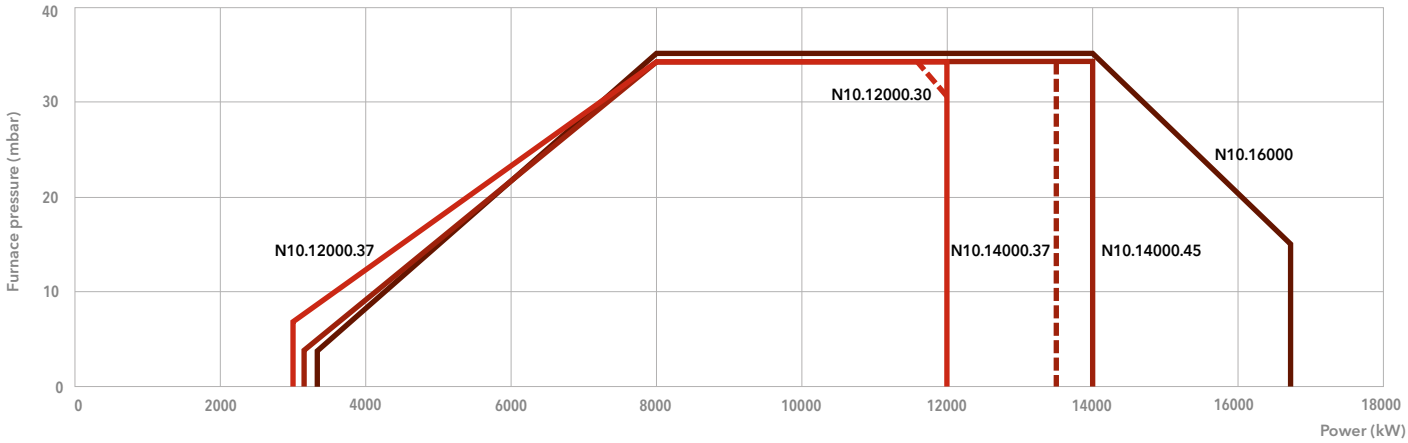

FQe = external frequency converter

	N10.12000.30 L-EUF	N10.12000.37 L-EUF	N10.14000.37 L-EUF	N10.14000.45 L-EUF	N10.16000.45 L-EUF
Operating range	3000 – 12000 kW	3000 – 12000 kW	3150 – 13500 kW	3150 – 14000 kW	3300 – 16670 kW
Control box / flame detector	Etamatic OEM / FFS 08	Etamatic OEM / FFS 08	Etamatic OEM / FFS 08	Etamatic OEM / FFS 08	Etamatic OEM / FFS 08
Fan motor	50/60 Hz – 30 kW	50/60 Hz – 37 kW	50/60 Hz – 37 kW	50/60 Hz – 45 kW	50/60 Hz – 45 kW
Pump	2700 l/h – 4 kW	2700 l/h – 4 kW	2700 l/h – 4 kW	2700 l/h – 4 kW	2700 l/h – 4 kW
Acoustic level	< 97 dB(A)	< 97 dB(A)	< 97 dB(A)	< 97 dB(A)	< 97 dB(A)
Complete burner code	on request	on request	on request	on request	on request

DIMENSIONS (mm)

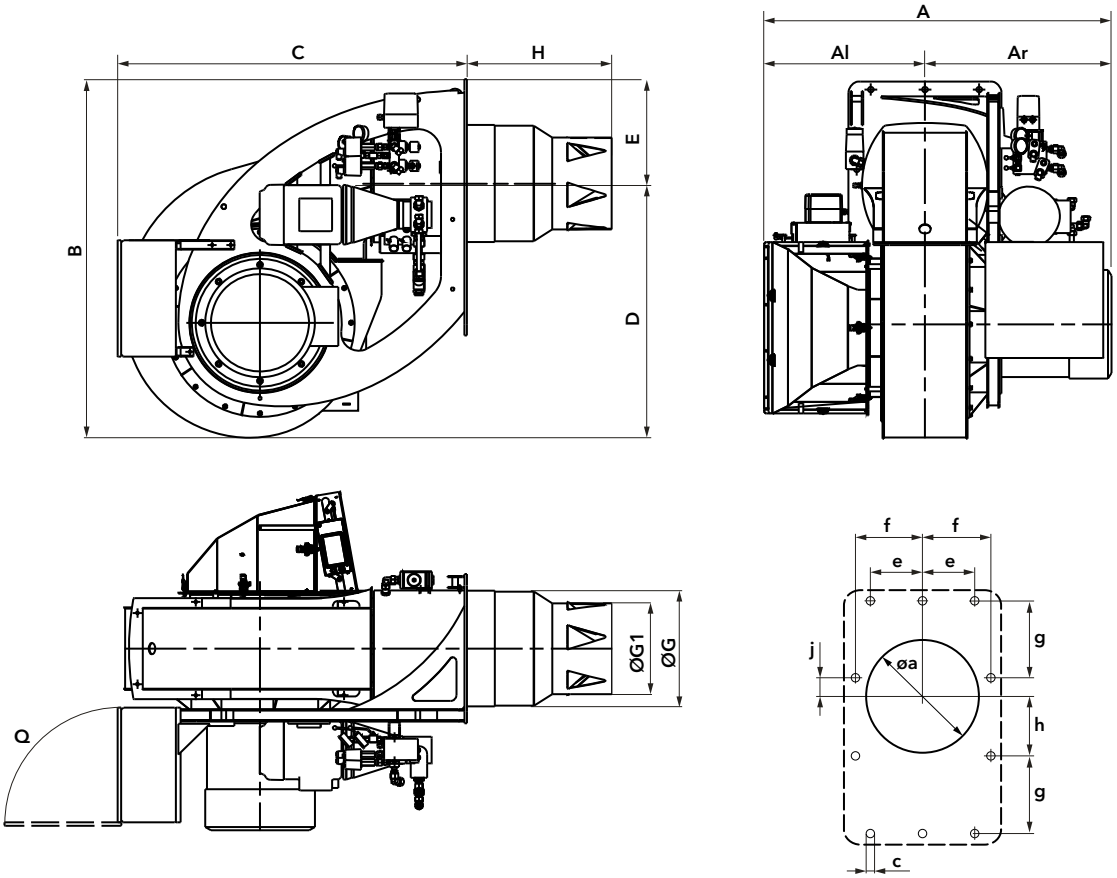

Model	A	Al	Ar	B	C	D	E	ØG	ØG1	H	Q	Øa	c	e	f	g	h	j
N10.12000.30 L-EUF	1441	683	758	1545	1494	1095	450	504	390	620*	800	525	M20	230	290	345	275	70
N10.12000.37 L-EUF	1441	683	758	1545	1494	1095	450	504	390	620*	800	525	M20	230	290	345	275	70
N10.14000.37 L-EUF	1441	683	758	1545	1494	1095	450	504	390	620*	800	525	M20	230	290	345	275	70
N10.14000.45 L-EUF	1530	683	847	1545	1494	1095	450	504	390	620*	800	525	M20	230	290	345	275	70
N10.16000.45 L-EUF	1530	683	847	1545	1494	1095	450	504	390	620*	800	525	M20	230	290	345	275	70

*: different length on request

PACKAGING

The burner is delivered on a pallet with:
- burner body with mounted combustion head
- boiler fixing accessories
- technical documentation

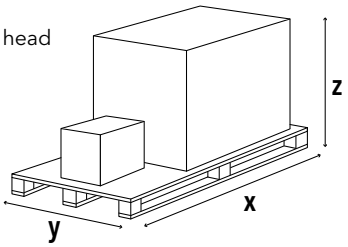

Model	Dimensions (mm)			Gross weight (kg)
	X	Y	Z	
N10... L-EUF	2200	1800	1900	1000

N

LIGHT OIL

Low NOx Class 2

N10 L-E

3600 … 12000 kW
Two stage progressive/modulating electronic

- **Fuels:** light oil, viscosity 6 mm²/s at 20°C, Hi = 11,86 kWh/kg
- **Emission class:** Low NOx class 2 (≤185 mg/kWh) according to EN267
- **Protection level:** IP 41 (IP 54 as option)

TECHNICAL DATA

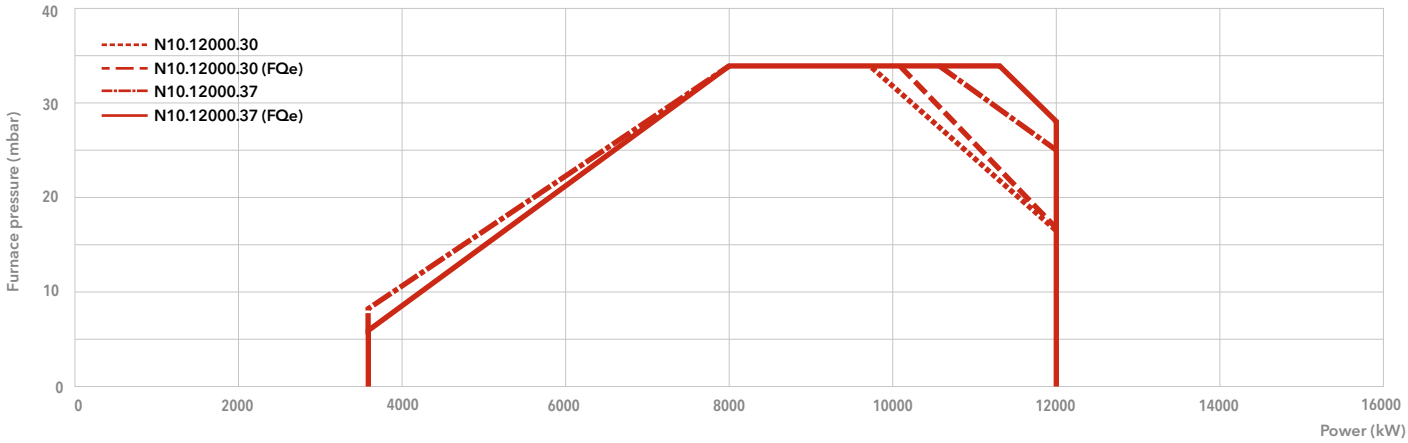

FQe = external frequency converter

	N10.12000.30 L-E	N10.12000.37 L-E
Operating range	3600 – 12000 kW	3600 – 12000 kW
Control box / flame detector	Etamatic OEM / FFS 08	Etamatic OEM / FFS 08
Fan motor	50/60 Hz – 30 kW	50/60 Hz – 37 kW
Pump	2 200 l/h – 4 kW	2 200 l/h – 4 kW
Acoustic level	< 97 dB(A)	< 97 dB(A)
Complete burner code	on request	on request

DIMENSIONS (mm)

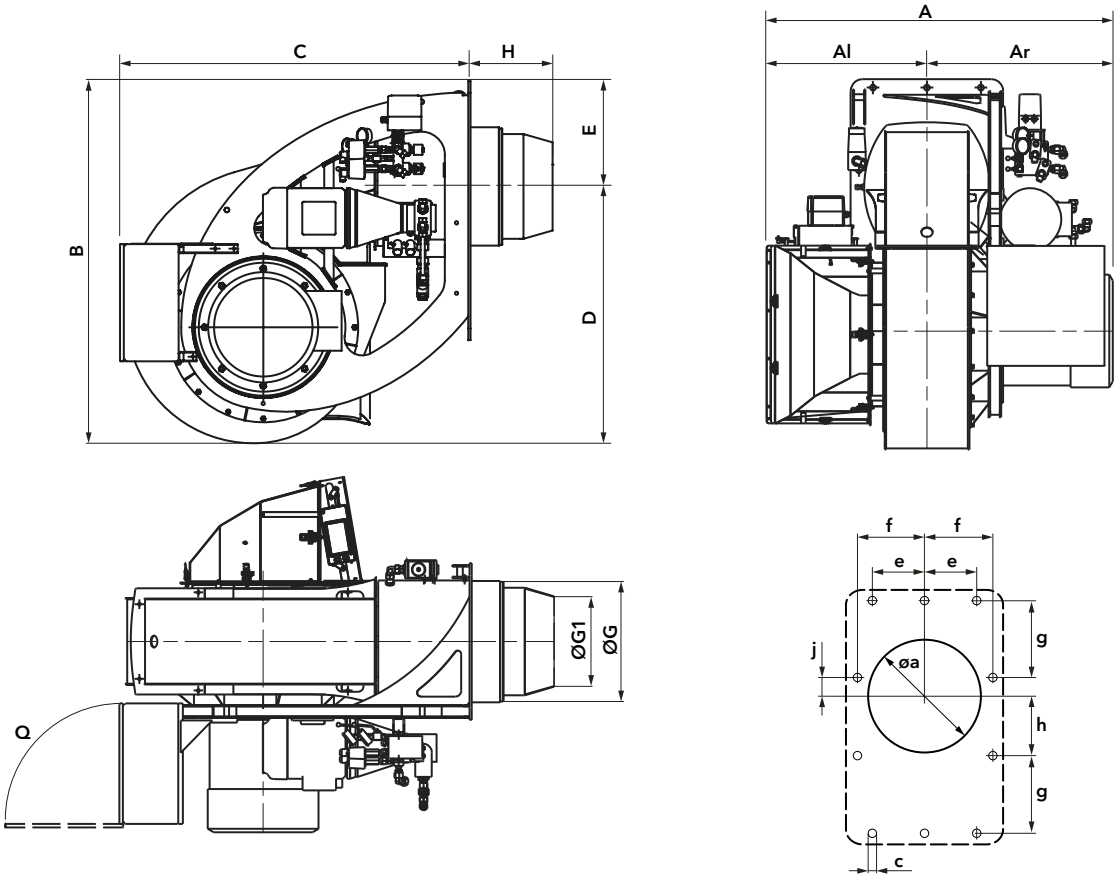

Model	A	Al	Ar	B	C	D	E	ØG	ØG1	H	Q	Øa	c	e	f	g	h	j
N10.12000.30 L-E	1480	685	795	1545	1494	446	450	504	369	350*	800	525	M20	230	290	345	275	70
N10.12000.37 L-E	1480	685	795	1545	1494	446	450	504	369	350*	800	525	M20	230	290	345	275	70

*: different length on request

PACKAGING

The burner is delivered on a pallet with:
- burner body with mounted combustion head
- boiler fixing accessories
- technical documentation

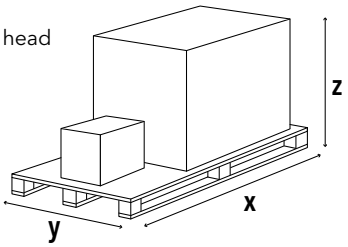

Model	Dimensions (mm)			Gross weight (kg)
	X	Y	Z	
N10... L-E	2200	1800	1900	1000

HO-TRON

MONOBLOCK BURNERS
FROM 68 TO 17000 kW
HEAVY OIL

HEAVY OIL BURNERS UP TO 17 MW

ELCO offers a wide range of heavy oil burners designed for traditional applications and industrial process applications.
The HO-TRON range offers several models available in different configurations with a power output covering a range from 68 kW to 17 MW.
All models are suitable to work with heavy oil up to 50°E at 50°C.

BURNER VERSIONS TO SUIT ANY NEED

In order to optimize the performance and the ease of use, the HO-TRON burners are available in the following versions:
• one stage, for HO-TRON 0 and HO-TRON 1, models up to 340 kW;
• two stages, up to the model HO-TRON 4;
• two stage progressive mechanical operation (up to 17 MW).

EASY MAINTENANCE SOLUTIONS

All models feature easy access to the combustion components in order to simplify the maintenance operations.
The maintenance activities are simplified also thanks to the sliding bar system, which allows easy access to the internal components, available on all models up to HO-TRON 6.

FLEXIBILITY AND CUSTOMIZATION

All HO-TRON burners are fitted with heavy oil electric heating system on board and integrated electrical panel complete with pre-heater management system.
Ring system components for oil preparation can be designed and supply on request.
For a large extent of applications customized solutions can be offered in order to meet plants requirements.

MAIN TECHNICAL FEATURES

- One stage, two stages and two stage progressive/modulating mechanical forced draught burners
- Electronic version available on request
- Fuel: heavy oil, viscosity 50°E at 50°C, Hi = 10,97 kWh/kg
- Two combustion head lengths available
- Pump mounted on the body up to model HO-TRON 6.8500 and separated motor-pump starting from model HO-TRON 6.10500
- Electrical heavy oil heater on board (oil supply to the burner at 80°C and 3 bar)
- Additional heaters on the pipes and the valves, into the pump and the nozzle holder
- Closing of the air flap on burner shut-down
- Complete control panel mounted on the burner with electrical equipment
- Products are in compliance with EN267 European standards and with the following directives:
  - 2014/35/UE Low Voltage Directive
  - 2014/30/UE EMC Directive
  - 2006/42/EC Machinery Directive
  - 2011/65/EU RoHS2 Directive

PRODUCT LIST

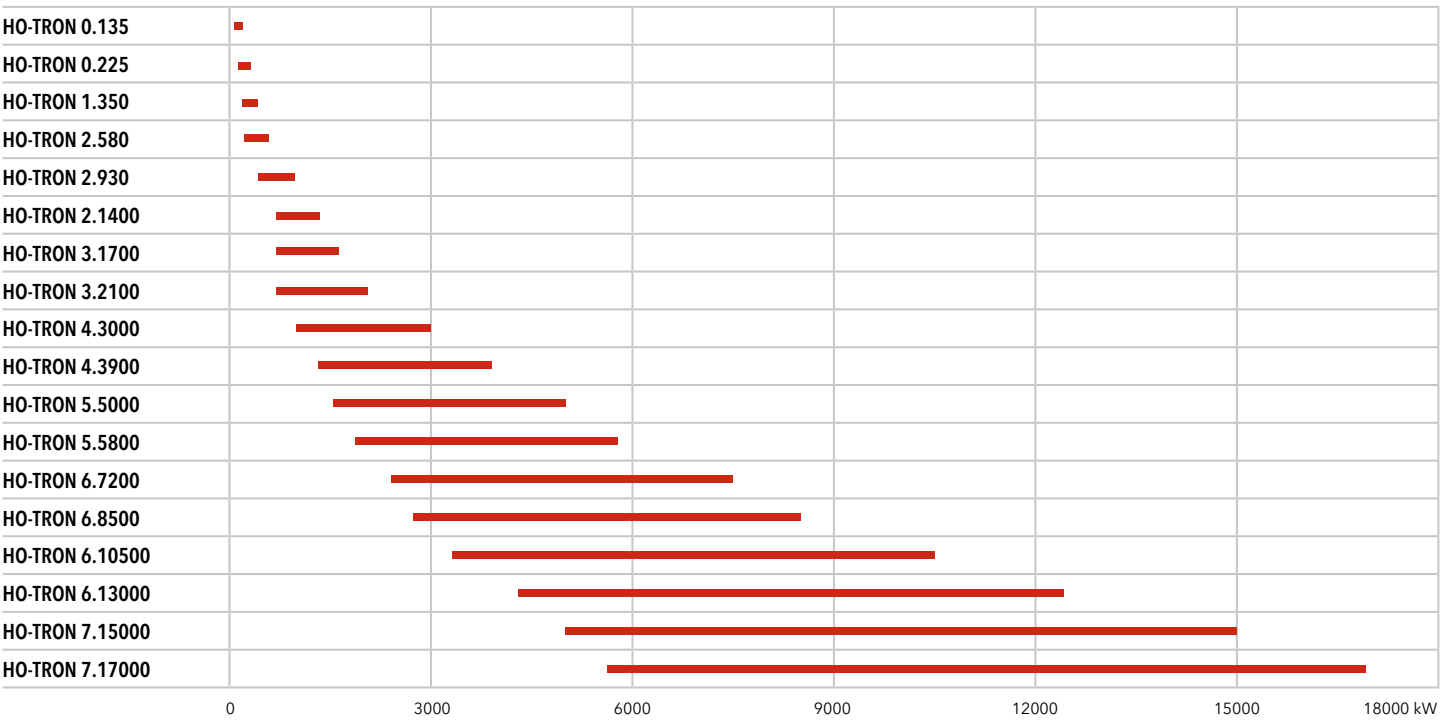

HO-TRON 0

68 ... 227 kW
One stage

- **Fuel:** heavy oil, viscosity 50°E at 50°C, Hi = 10,5…11,5 kWh/kg
- **Protection level:** IP 42 (IP54 on request)

TECHNICAL DATA

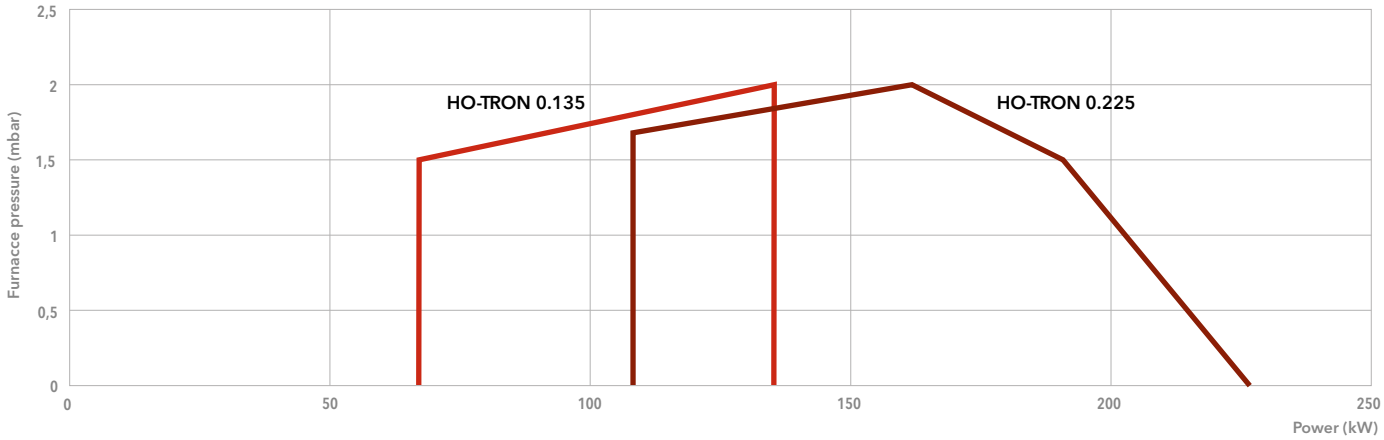

	HO-TRON 0.135		HO-TRON 0.225	
Operating range	68 – 136 kW		108 – 227 kW	
Fuel flow	6 – 12 kg/h		9,5 – 20 kg/h	
Nozzles	according to required power		according to required power	
Control box	LMO 44		LMO 44	
Fan motor	2 800 rpm – 230 V – 50 Hz – 450 W		2 800 rpm – 230 V – 50 Hz – 450 W	
Pump	D67C		D67C	
Resistance on pre-heaters	2 x 650 W		3 x 650 W	
Head length	KN	KL	KN	KL
Complete burner code	**3142568**	**3142569**	**3142570**	**3142571**

DIMENSIONS (mm)

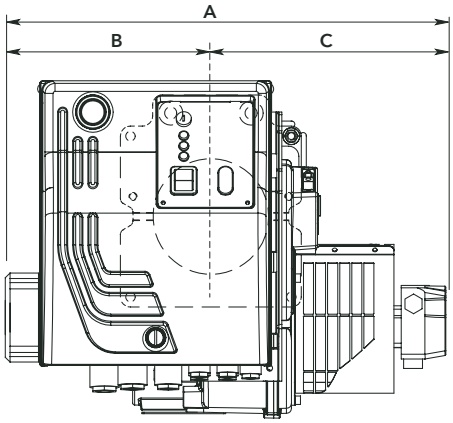

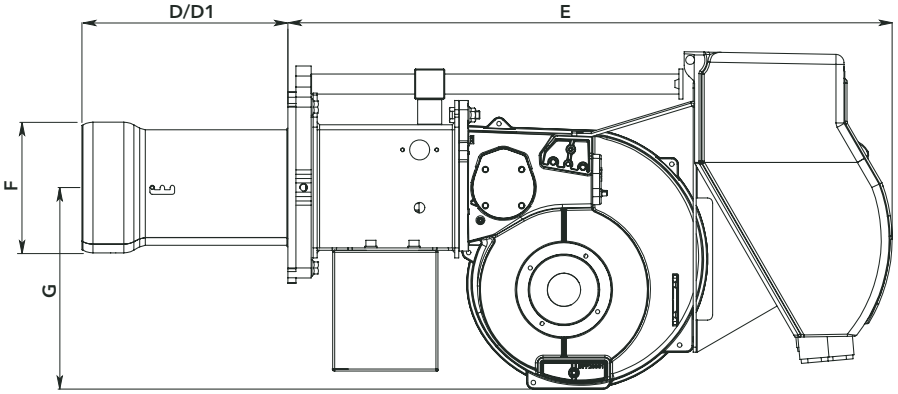

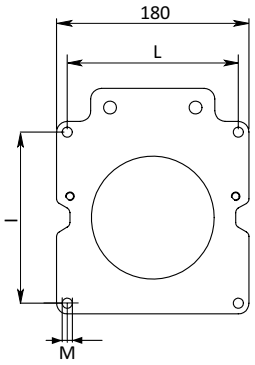

Model	A	B	C	D	D1	E	F	G	I	L	M
HO-TRON 0.135	520	290	230	205	325	535	130	201	160	160	M8
HO-TRON 0.225	520	290	230	205	325	535	130	201	160	160	M8

PACKAGING

The complete burner with combustion head is delivered in a carton box with flexible hoses, boiler fixing accessories and technical documentation.

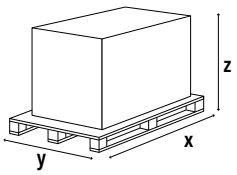

Model	Dimensions (mm)		
	X	Y	Z
HO-TRON 0.135	900	780	700
HO-TRON 0.225	900	780	700

HO-TRON 1 / HO-TRON 1 Z / HO-TRON 2 Z

170 … 570 kW
One stage / Two stages

- **Fuel:** heavy oil, viscosity 50°E at 50°C, Hi = 10,5…11,5 kWh/kg
- **Protection level:** IP 40

TECHNICAL DATA

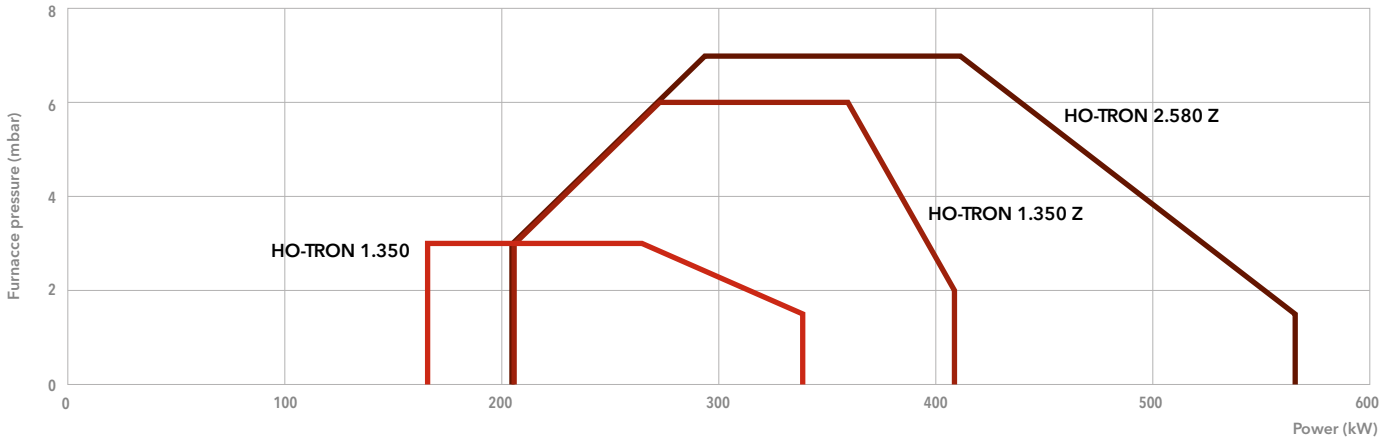

	HO-TRON 1.350		HO-TRON 1.350 Z		HO-TRON 2.580 Z	
Operating range	170 – 340 kW		205 – 410 kW		205 – 570 kW	
Fuel flow	15 – 30 kg/h		18 – 36 kg/h		18 – 50 kg/h	
Nozzles	according to required power		according to required power		according to required power	
Control box	LMO 44		LMO 44		LMO 44	
Fan motor	2 800 rpm – 230/400 V – 50 Hz – 740 W		2 800 rpm – 230/400 V – 50 Hz – 740 W		2 800 rpm – 230/400 V – 50 Hz – 1100 W	
Pump	E4 NC 1069		E4 NC 1069		E4 NC 1069	
Resistance on pre-heaters	3,9 kW		3,9 kW		3,9 kW	
Head length	KN	KL	KN	KL	KN	KL
Complete burner code	**on request**	**on request**	**on request**	**on request**	**3142671**	**on request**

DIMENSIONS (mm)

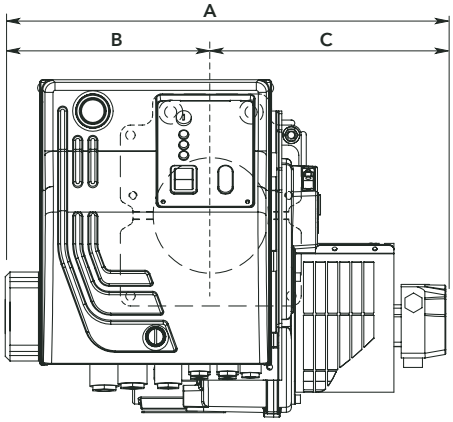

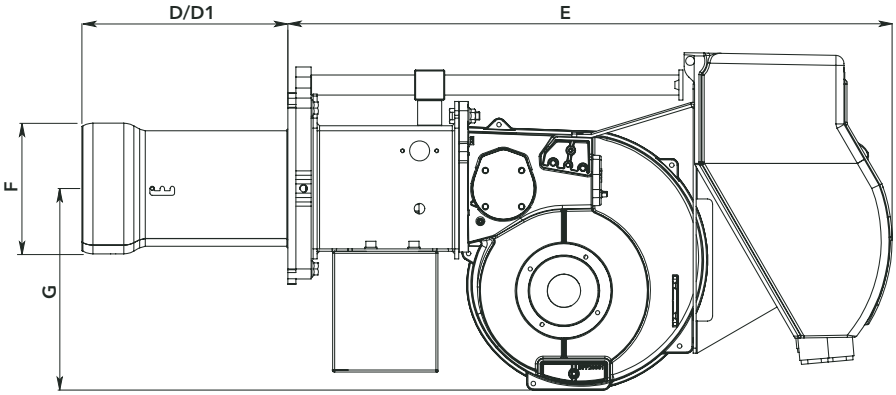

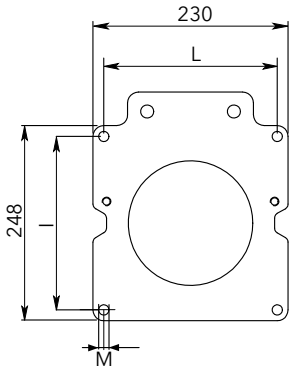

Model	A	B	C	D	D1	E	F	G	I	L	M
HO-TRON 1.350	562	302	260	205	325	653	160	280	185/200	185/200	M10
HO-TRON 1.350 Z	562	302	260	205	325	653	160	280	185/200	185/200	M10
HO-TRON 2.580 Z	562	302	260	205	325	653	160	280	185/200	185/200	M10

PACKAGING

The complete burner with combustion head is delivered in a carton box with flexible hoses, boiler fixing accessories and technical documentation.

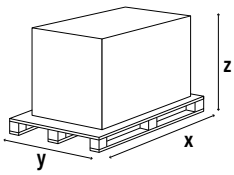

Model	Dimensions (mm)		
	X	Y	Z
HO-TRON 1.350	900	780	700
HO-TRON 1.350 Z	900	780	700
HO-TRON 2.580 Z	900	780	700

HO-TRON 2 Z

465 ... 1395 kW
Two stages

- **Fuel:** heavy oil, viscosity 50°E at 50°C, Hi = 10,5…11,5 kWh/kg
- **Protection level:** IP 42 (IP54 on request)

TECHNICAL DATA

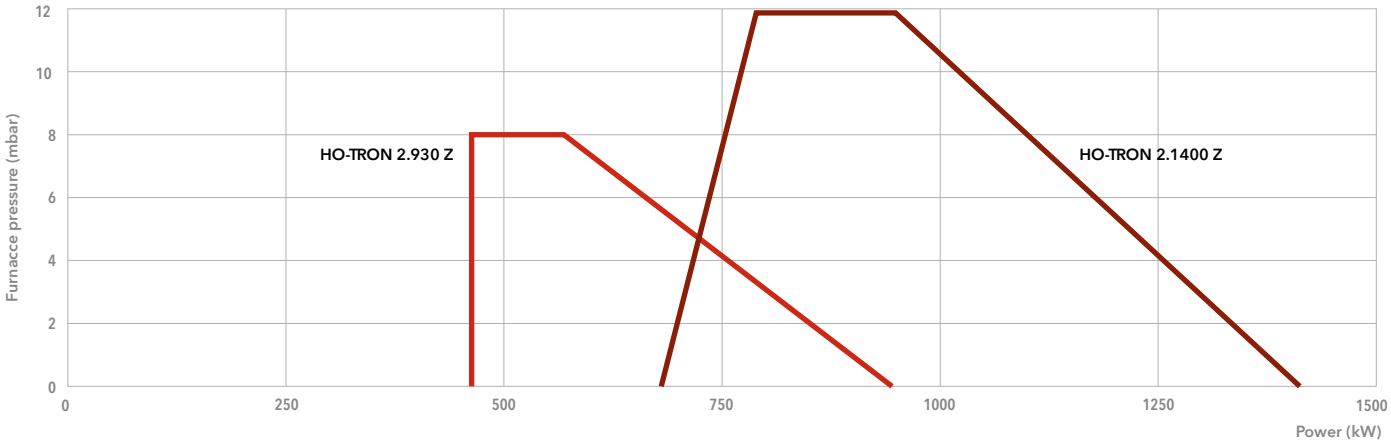

	HO-TRON 2.930 Z		HO-TRON 2.1400 Z	
Operating range	465 – 930 kW		682 – 1395 kW	
Fuel flow	41 – 82 kg/h		60 – 122 kg/h	
Nozzles	according to required power		according to required power	
Control box	LMO 44		LMO 44	
Fan motor	2800 rpm – 230 V – 50 Hz – 1,5 kW		2800 rpm – 230 V – 50 Hz – 2,2 kW	
Pump	E4 NC 1069		E4 NC 1069	
Resistance on pre-heaters	4,65 kW		7,05 kW	
Head length	KN	KL	KN	KL
Complete burner code	**3142672**	**3142215**	**3142673**	**3143193**

DIMENSIONS (mm)

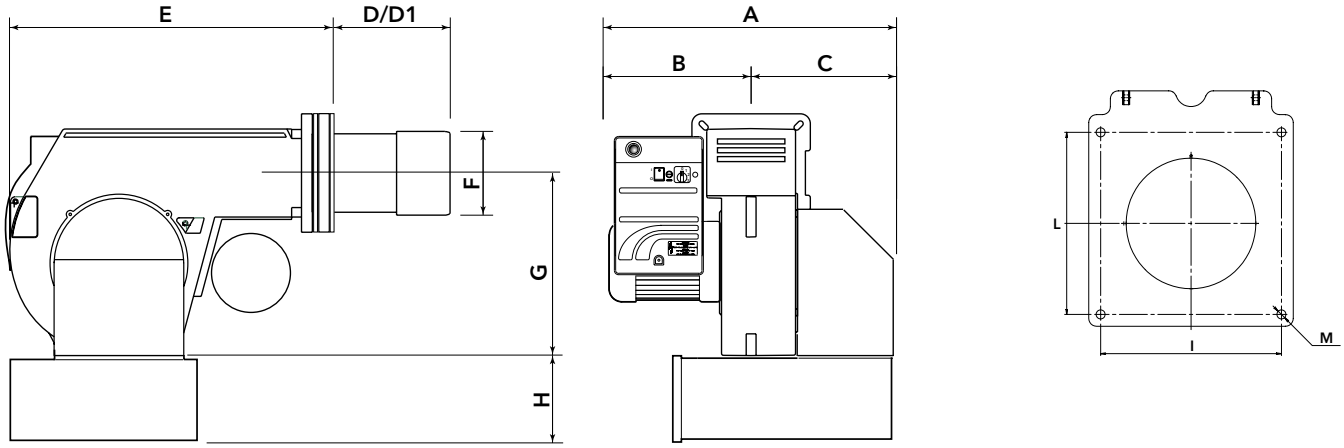

Model	A	B	C	D	D1	E	F	G	H	I	L	M
HO-TRON 2.930 Z	758	388	370	170	310	600	185	390	210*	190	190	M10
HO-TRON 2.1400 Z	758	388	370	170	310	600	185	390	210*	190	190	M10

* optional silencer

PACKAGING

The complete burner with combustion head is delivered in a carton box with flexible hoses, boiler fixing accessories and technical documentation.

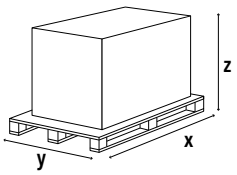

Model	Dimensions (mm)		
	X	Y	Z
HO-TRON 2.930 Z	1100	780	700
HO-TRON 2.1400 Z	1100	780	700

HO-TRON 3 Z

682 ... 2093 kW
Two stages

- **Fuel:** heavy oil, viscosity 50°E at 50°C, Hi = 10,5…11,5 kWh/kg
- **Protection level:** IP 42 (IP54 on request)

TECHNICAL DATA

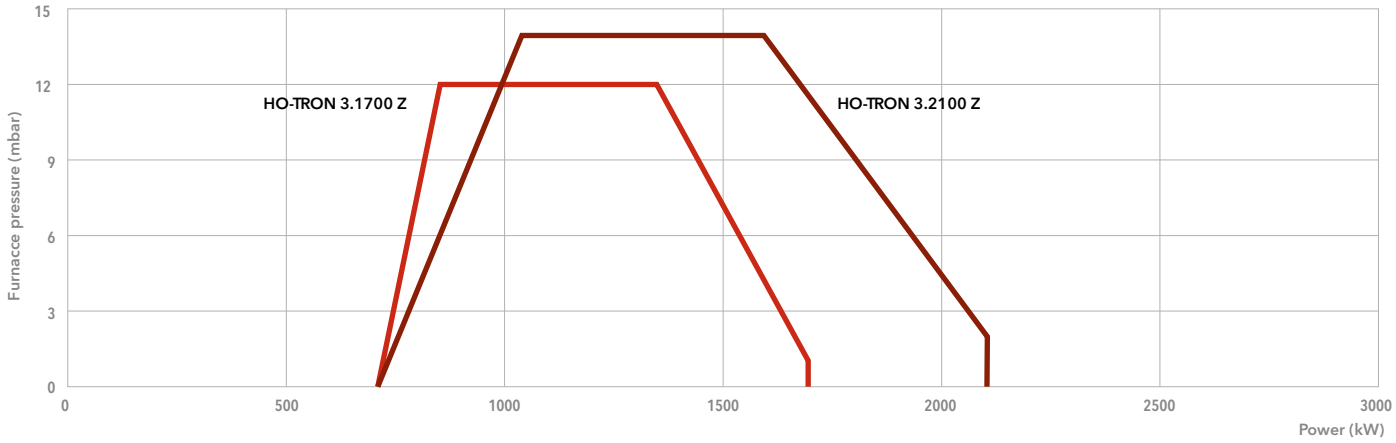

	HO-TRON 3.1700 Z		HO-TRON 3.2100 Z	
Operating range	682 – 1700 kW		682 – 2093 kW	
Fuel flow	60 – 148 kg/h		60 – 184 kg/h	
Nozzles	according to required power		according to required power	
Control box	LMO 44		LMO 44	
Fan motor	2800 rpm – 230/400 V – 50 Hz – 3 kW		2800 rpm – 230/400 V – 50 Hz – 4 kW	
Pump	E6 NC 1069		E6 NC 1069	
Resistance on pre-heaters	9 kW		10,5 kW	
Head length	KN	KL	KN	KL
Complete burner code	**3142675**	**3143194**	**3142441**	**3142677**

DIMENSIONS (mm)

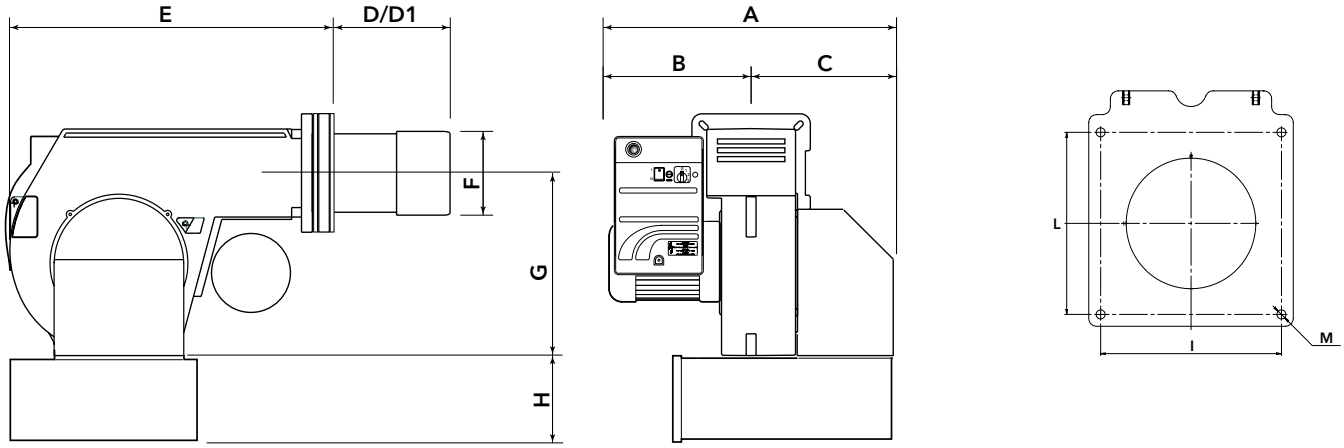

Model	A	B	C	D	D1	E	F	G	H*	I	L	M
HO-TRON 3.1700 Z	920	450	470	280	480	710	250	420	260	315	315	M14
HO-TRON 3.2100 Z	920	450	470	280	480	710	270	420	260	315	315	M14

* optional silencer

PACKAGING

The complete burner with combustion head is delivered in a carton box with flexible hoses, boiler fixing accessories and technical documentation.

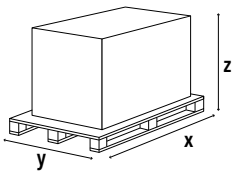

Model	Dimensions (mm)		
	X	Y	Z
HO-TRON 3.1700 Z	1370	1140	950
HO-TRON 3.2100 Z	1370	1140	950

HO-TRON 4 Z/Z3

1000 ... 3900 kW
Two stages

- **Fuel:** heavy oil, viscosity 50°E at 50°C, Hi = 10,5…11,5 kWh/kg
- **Protection level:** IP 42 (IP54 on request)

TECHNICAL DATA

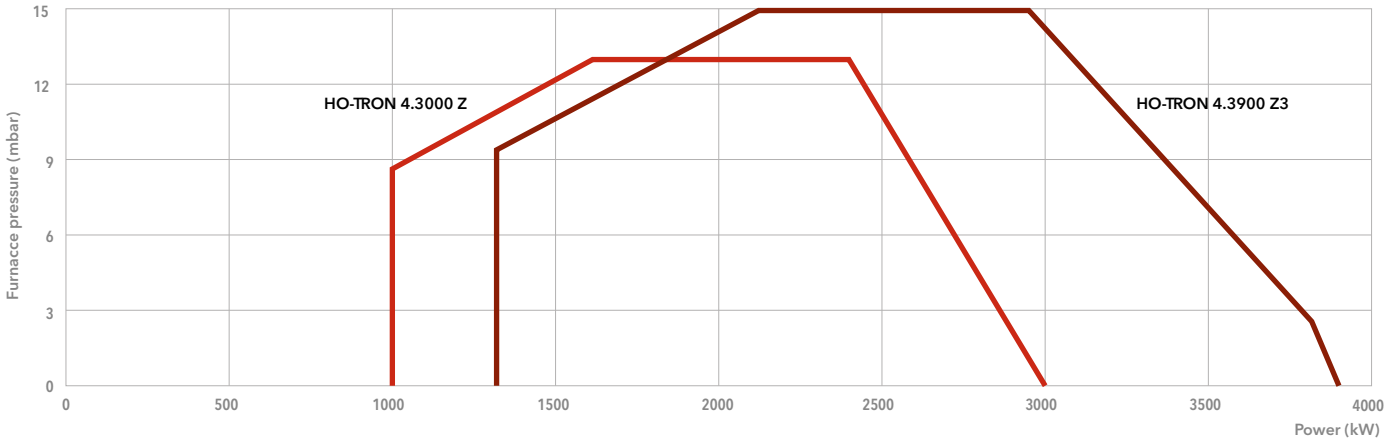

	HO-TRON 4.3000 Z		HO-TRON 4.3900 Z3	
Operating range	1000 – 3000 kW		1300 – 3900 kW	
Fuel flow	88,5 – 264 kg/h		115 – 343 kg/h	
Nozzles	according to required power		according to required power	
Control box	LMO 44		LMO 44	
Fan motor	2800 rpm – 230/400 V – 50 Hz – 7,5 kW		2800 rpm – 230/400 V – 50 Hz – 9 kW	
Pump	E7 NC 1069		E7 NC 1069	
Resistance on pre-heaters	18 kW		21 kW	
Head length	KN	KL	KN	KL
Complete burner code	**3142678**	**3142679**	**3142680**	**3142681**

DIMENSIONS (mm)

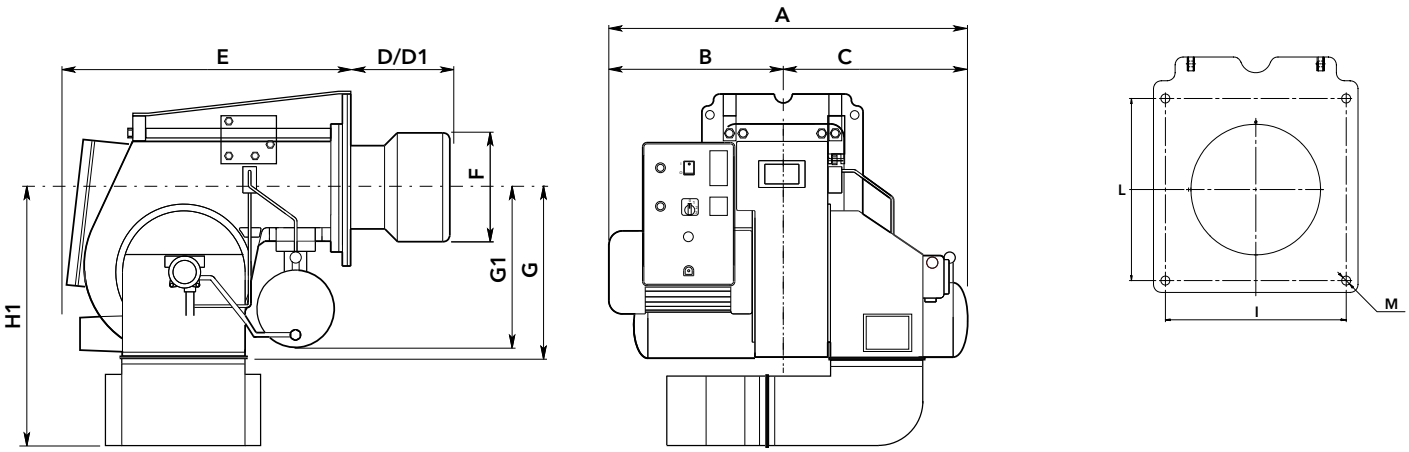

Model	A	B	C	D	D1	E	F	G	G1	H1*	I	L	M
HO-TRON 4.3000 Z	1205	603	602	350	600	925	290	470	430	746	400	400	M16
HO-TRON 4.3900 Z3	1205	603	602	350	600	925	320	470	430	746	400	400	M16

* optional silencer

PACKAGING

The complete burner with combustion head is delivered in a single wooden box with flexible hoses, boiler fixing accessories and technical documentation.

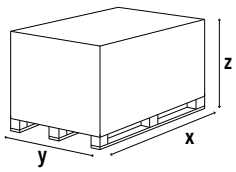

Model	Dimensions (mm)		
	X	Y	Z
HO-TRON 4.3000 Z	1580	1580	1050
HO-TRON 4.3900 Z3	1580	1580	1050

HO-TRON 4 R

1000 … 3900 kW
Two stage progressive/modulating mechanical

- **Fuel:** heavy oil, viscosity 50°E at 50°C, Hi = 10,5…11,5 kWh/kg
- **Protection level:** IP 42 (IP54 on request)

TECHNICAL DATA

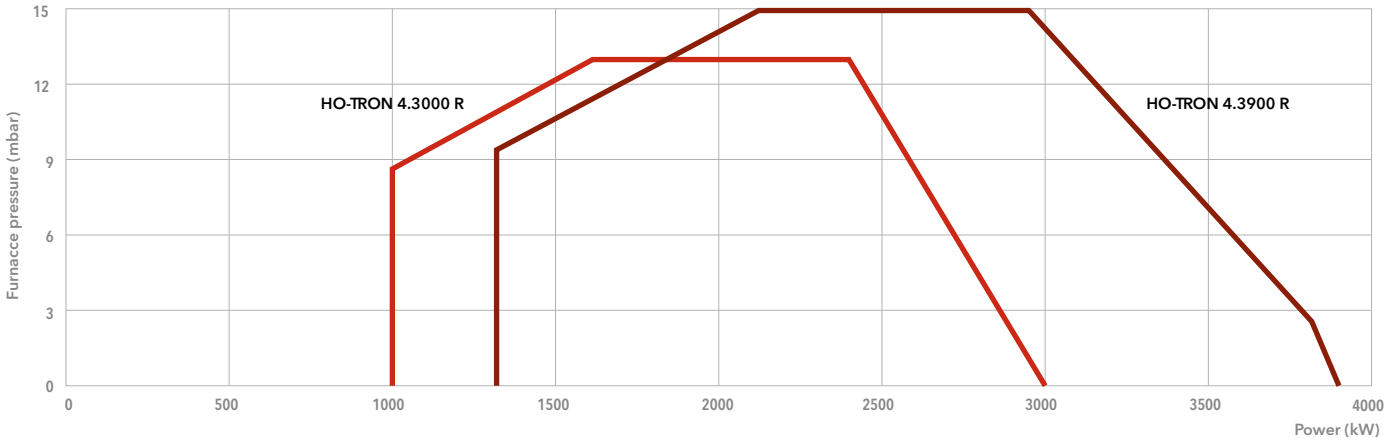

	HO-TRON 4.3000 R		HO-TRON 4.3900 R	
Operating range	1000 – 3000 kW		1300 – 3900 kW	
Fuel flow	88,5 – 264 kg/h		115 – 343 kg/h	
Nozzles	according to required power		according to required power	
Control box	LAL 1.25		LAL 1.25	
Fan motor	2800 rpm – 230/400 V – 50 Hz – 7,5 kW		2800 rpm – 230/400 V – 50 Hz – 9 kW	
Pump	TA 3C		TA 3C	
Resistance on pre-heaters	18 kW		21 kW	
Head length	KN	KL	KN	KL
Complete burner code	**on request**	**on request**	**on request**	**on request**

DIMENSIONS (mm)

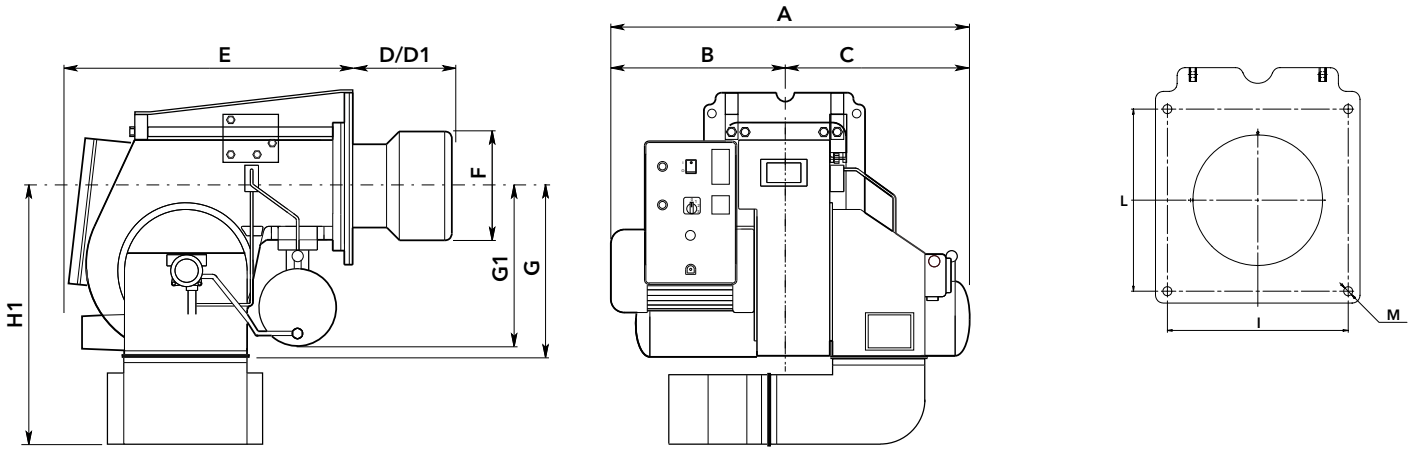

Model	A	B	C	D	D1	E	F	G	G1	H1*	I	L	M
HO-TRON 4.3000 R	1205	603	602	350	600	925	290	470	430	746	400	400	M16
HO-TRON 4.3900 R	1205	603	602	350	600	925	320	470	430	746	400	400	M16

* optional silencer

PACKAGING

The complete burner with combustion head is delivered in a single wooden box with flexible hoses, boiler fixing accessories and technical documentation.

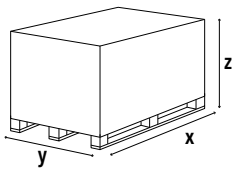

Model	Dimensions (mm)		
	X	Y	Z
HO-TRON 4.3000 R	1580	1580	1050
HO-TRON 4.3900 R	1580	1580	1050

HO-TRON 5 R

1578 … 5800 kW
Two stage progressive/modulating mechanical

- **Fuel:** heavy oil, viscosity 50°E at 50°C, Hi = 10,5…11,5 kWh/kg
- **Protection level:** IP 42 (IP54 on request)

TECHNICAL DATA

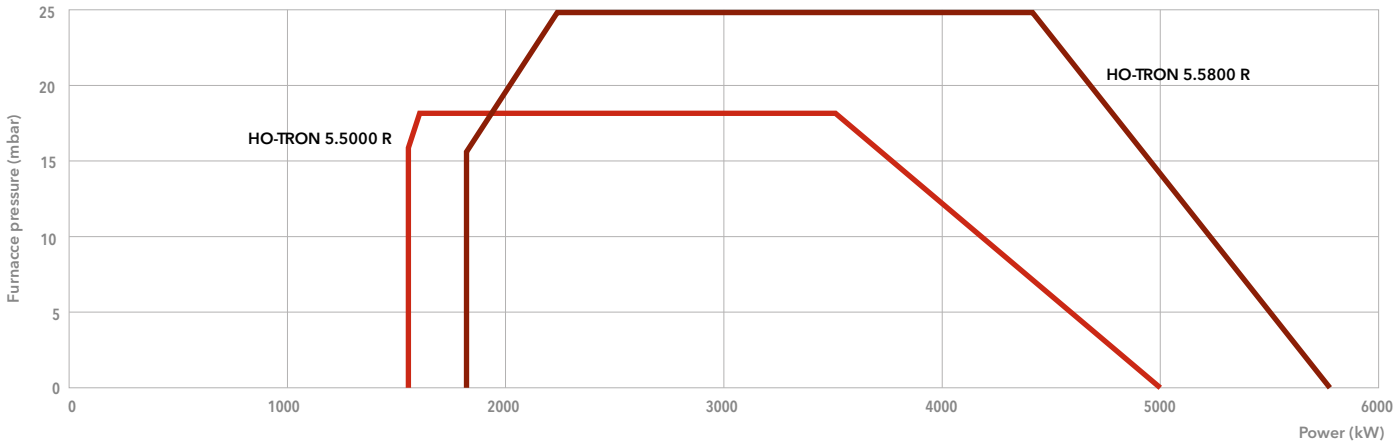

	HO-TRON 5.5000 R		HO-TRON 5.5800 R	
Operating range	1578 – 5000 kW		1795 – 5800 kW	
Fuel flow	140 – 440 kg/h		159 – 510 kg/h	
Nozzles	according to required power		according to required power	
Control box	LAL 1.25		LAL 1.25	
Fan motor	2800 rpm – 230/400 V – 50 Hz – 11 kW		2800 rpm – 230/400 V – 50 Hz – 15 kW	
Pump	TA 4C		TA 4C	
Resistance on pre-heaters	24 kW		24 kW	
Head length	KN	KL	KN	KL
Complete burner code	**3143183**	**on request**	**on request**	**on request**

DIMENSIONS (mm)

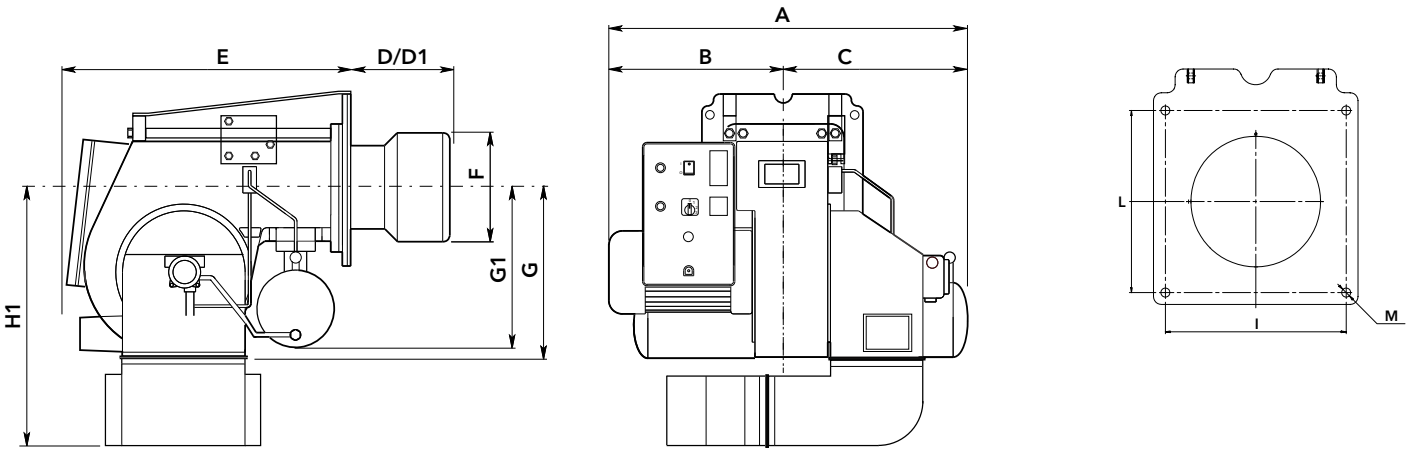

Model	A	B	C	D	D1	E	F	G	G1	H1	I	L	M
HO-TRON 5.5000 R	1300	610	690	370	670	990	320	570	480	965	460	460	M16
HO-TRON 5.5800 R	1300	610	690	370	670	990	320	570	480	965	460	460	M16

* optional silencer

PACKAGING

The complete burner with combustion head is delivered in a single wooden box with flexible hoses, boiler fixing accessories and technical documentation.

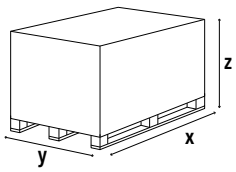

Model	Dimensions (mm)		
	X	Y	Z
HO-TRON 5.5000 R	1580	1580	1050
HO-TRON 5.5800 R	1580	1580	1050

HO-TRON 6 R

2417 … 12500 kW
Two stage progressive/modulating mechanical

- **Fuel:** heavy oil, viscosity 50°E at 50°C, Hi = 10,5…11,5 kWh/kg
- **Protection level:** IP 42 (IP54 on request)

TECHNICAL DATA

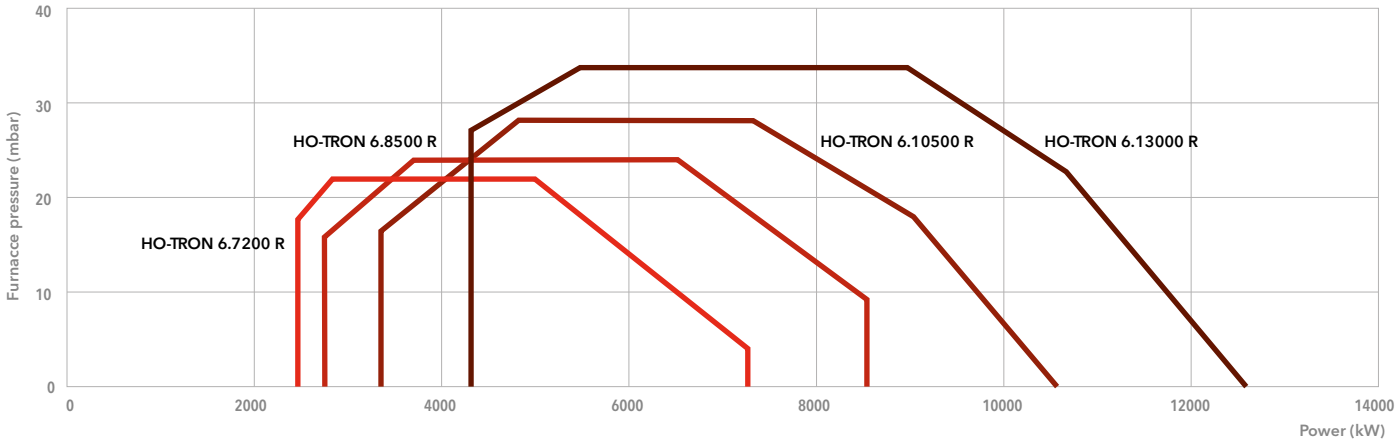

	HO-TRON 6.7200 R		HO-TRON 6.8500 R		HO-TRON 6.10500 R		HO-TRON 6.13000 R	
Operating range	2417 – 7500 kW		2750 – 8500 kW		3300 – 10500 kW		4367 – 12500 kW	
Fuel flow	214 – 660 kg/h		243 – 748 kg/h		292 – 924 kg/h		386 – 1099 kg/h	
Nozzles	according to required power		according to required power		according to required power		according to required power	
Control box	LAL 2.25		LAL 2.25		LAL 2.25		LAL 2.25	
Fan motor	2800 rpm – 230/400 V 50 Hz – 15 kW		2800 rpm – 230/400 V 50 Hz – 18,5 kW		2800 rpm – 230/400 V 50 Hz – 22 kW		2800 rpm – 230/400 V 50 Hz – 37 kW	
Pump	TA 5C		TA 5C		T5 + TV		T5 + TV	
Resistance on pre-heaters	30 kW		30 kW		44 kW		60 kW	
Head length	KN	KL	KN	KL	KN	KL	KN	KL
Complete burner code	**on request**	**on request**	**3143166**	**on request**	**on request**	**on request**	**3142911**	**on request**

DIMENSIONS (mm)

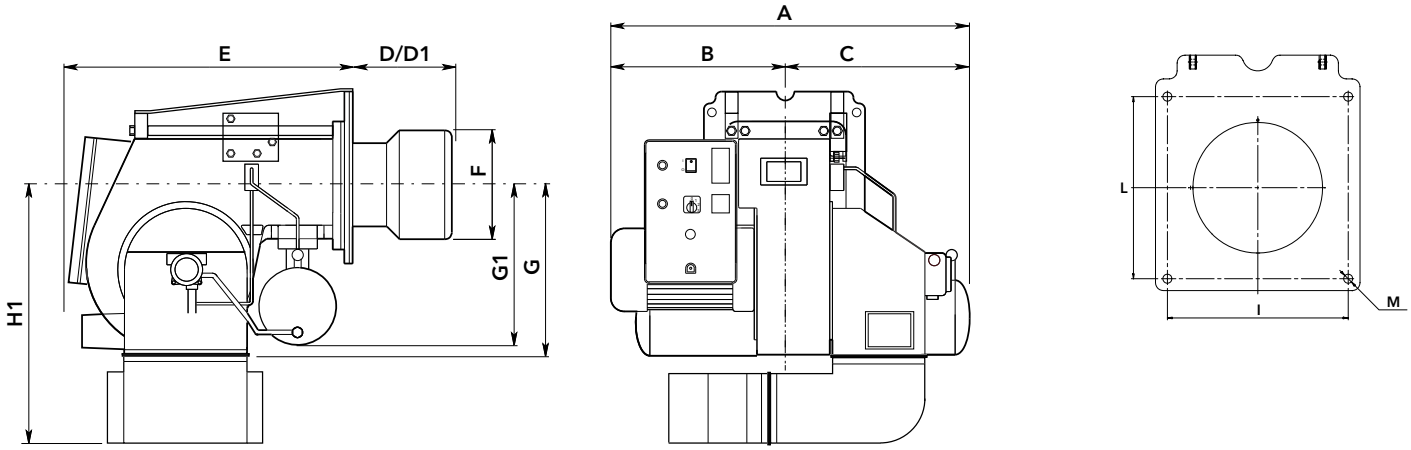

Model	A	B	C	D	E	F	G	G1	H1*	I	L	M
HO-TRON 6.7200 R	1390	660	730	525	1240	385	775	520	1270	460	460	M20
HO-TRON 6.8500 R	1480	660	820	535	1240	430	775	520	1270	460	460	M20
HO-TRON 6.10500 R	1505	685	820	535	1240	460	775	520	1270	460	460	M20
HO-TRON 6.13000 R	1750	800	950	535	1410	460	775	900	1270	460	460	M20

* optional silencer

PACKAGING

The complete burner with combustion head is delivered in a single wooden box with flexible hoses, boiler fixing accessories and technical documentation.

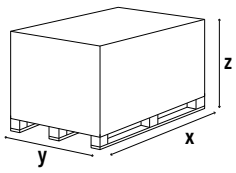

Model	Dimensions (mm)		
	X	Y	Z
HO-TRON 6.7200 R	2400	1800	1600
HO-TRON 6.8500 R	2400	1800	1600
HO-TRON 6.10500 R	2400	1800	1600
HO-TRON 6.13000 R	2400	1800	1600

HO-TRON 7 R

5000 … 17000 kW
Two stage progressive/modulating mechanical

- **Fuel:** heavy oil, viscosity 50°E at 50°C, Hi = 10,5…11,5 kWh/kg
- **Protection level:** IP 42 (IP54 on request)

TECHNICAL DATA

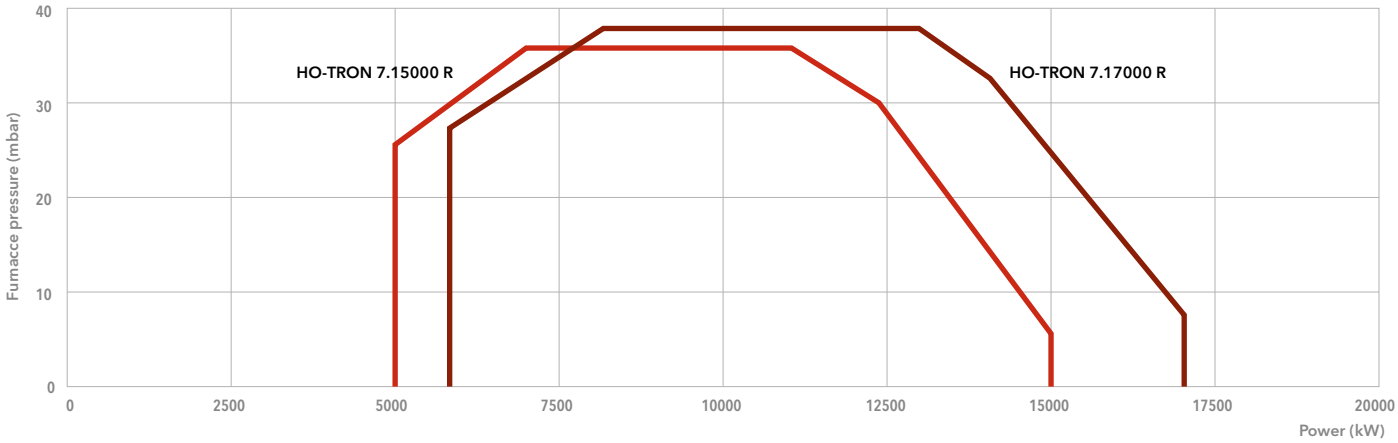

	HO-TRON 7.15000 R		HO-TRON 7.17000 R	
Operating range	5000 – 15000 kW		5700 – 17000 kW	
Fuel flow	440 – 1319 kg/h		500 – 1495 kg/h	
Nozzles	according to required power		according to required power	
Control box	LAL 1.25		LAL 1.25	
Fan motor	2800 rpm – 230/400 V – 50 Hz – 45 kW		2800 rpm – 230/400 V – 50 Hz – 55 kW	
Pump	T5 + TV		T5 + TV	
Resistance on pre-heaters	75 kW		75 kW	
Head length	KN	KL	KN	KL
Complete burner code	**on request**	**on request**	**on request**	**on request**

DIMENSIONS (mm)

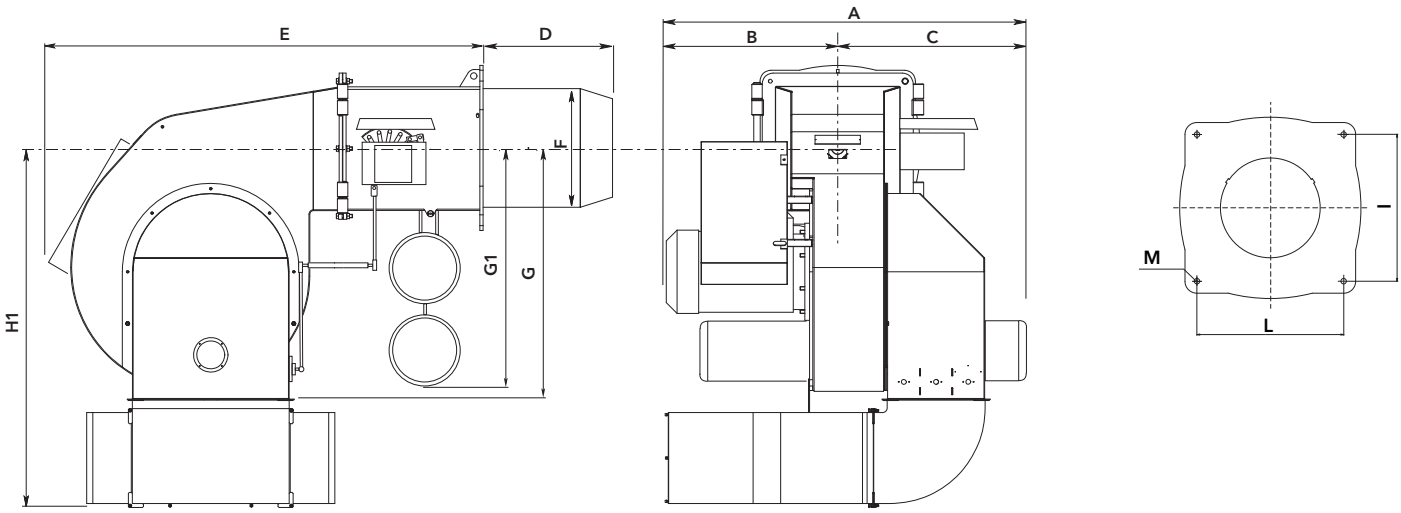

Model	A	B	C	D	E	F	G	G1	H1*	I	L	M
HO-TRON 7.15000 R	1700	800	900	590	1910	550	1320	1220	1670	620	620	M20
HO-TRON 7.17000 R	1770	870	900	590	1910	550	1320	1220	1670	620	620	M20

* optional silencer

PACKAGING

The complete burner with combustion head is delivered in a single wooden box with flexible hoses, boiler fixing accessories and technical documentation.

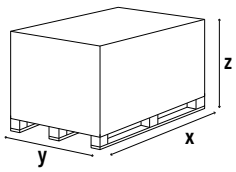

Model	Dimensions (mm)		
	X	Y	Z
HO-TRON 7.15000 R	2800	2100	2000
HO-TRON 7.17000 R	2800	2100	2000

GHO-TRON

MONOBLOCK BURNERS
FROM 414 TO 17000 kW
DUAL FUEL (GAS/HEAVY OIL)

DUAL FUEL BURNERS WORKING WITH GAS AND HEAVY OIL

GHO-TRON burners are suitable to work with natural gas or heavy oil up to 50°E at 50°C.
The range includes models ranging from a minimum capacity of 414 kW to a maximum power output of 17 MW.
Configurated and special version on request for selected type of applications and fuel characteristics.

SPECIAL FEATURES FOR HEAVY OIL COMBUSTION

All the models of the range are fitted with special components for heavy oil combustion.
Models starting from GHO-TRON 3 are equipped with digital thermoregulator integrated on the front panel to grant temperature stability of the fuel.
All the burners of the series have an heavy oil electric heating system on board and, starting from GHO-TRON 6, gas pilot included with separate supply line.

BURNER VERSIONS TO SUIT ANY NEED

The GHO-TRON dual fuel range is available in two different configurations:
• two stage version with electric servomotor and integrated system for the regulation of air and fuel for the model GHO-TRON 3
• two stage progressive version with electrical servomotor and double adjustable mechanical cam that allows air and fuel fine tuning (for models up to 17 MW).

EASY MAINTENANCE SOLUTIONS

GHO-TRON burners feature an adjustable combustion head for easy regulation and matching with different combustion chambers.
All burners are characterized by easy access to the combustion components in order to simplify the maintenance operations.

MAIN TECHNICAL FEATURES

- Two stages and two stage progressive/modulating mechanical forced draught burners
- Electronic version available on request
- Fuels:
  - natural gas, Hi = 6,99 … 11,39 kWh/Nm^3
  - heavy oil, viscosity 50°E at 50°C, net calorific value 10,97 kWh/kg
- Two combustion head lengths available
- Gun type architecture:
  - separated forced draught fan;
  - optimal accessibility;
  - easy maintenance;
  - secured burner head adjustments;
  - closing of the air flap on burner shut-down
- Separated motor-pump on board
- Electrical heavy oil heater (oil supply to the burner at 80°C and 3 bar)
- Additional heating on the pipes and the valves, into the pump and the nozzle holder
- Closing of the air flap on burner shut-down
- Complete electrical equipment in a switch cabinet mounted on the burner with control panel
- Products are in compliance with EN267 and EN676 European standards and with the following directives:
  - 2014/35/UE Low Voltage Directive
  - 2014/30/UE EMC Directive
  - 2016/426/UE Gas Appliances Regulation
  - 2006/42/EC Machinery Directive
  - 2011/65/EU RoHS2 Directive

PRODUCT LIST

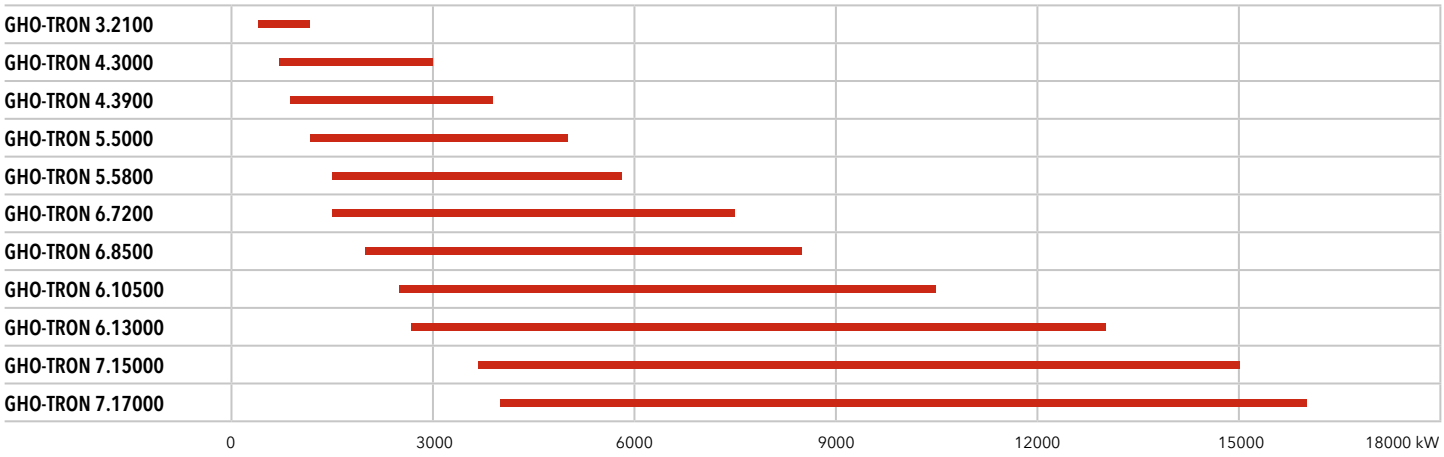

GHO-TRON

GAS / HEAVY OIL

Low NOx Class 2

GHO-TRON 3 Z

414 … 2150 kW
Two stages

- **Fuels:** natural gas, Hi = 6,99 … 11,39 kWh/Nm³;
  heavy oil, viscosity 50°E at 50°C, Hi = 10,5…11,5 kWh/kg
- **Emission class:** Low NOx class 2 (≤120 mg/kWh) according to EN676 in gas
- **Protection level:** IP 42 (IP54 on request)

TECHNICAL DATA

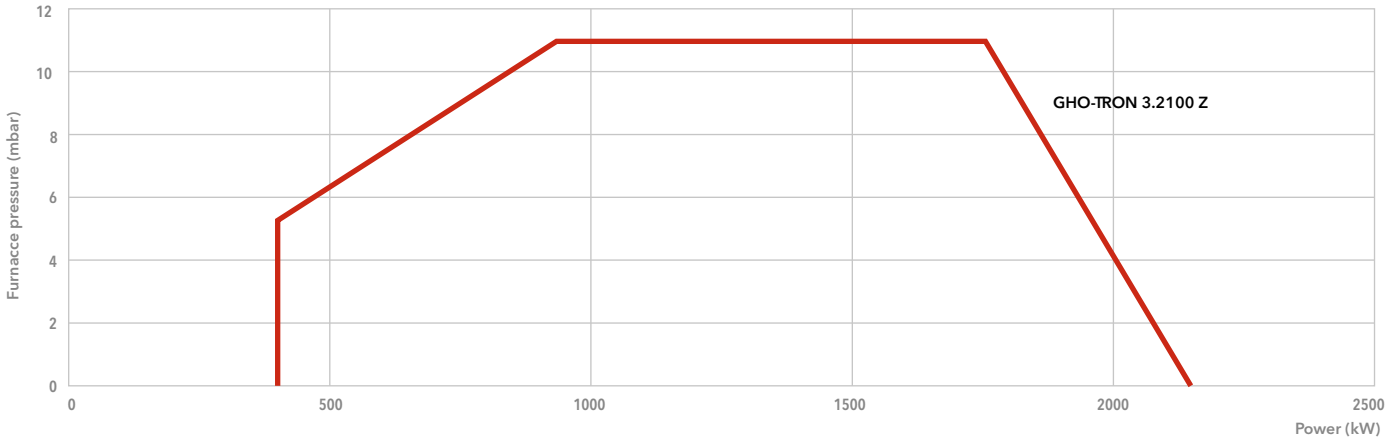

	GHO-TRON 3.2100 Z	
Operating range	414 – 2150 kW	
Fuel flow	36 – 189 kg/h	
Nozzles	according to required power	
Control box	LGB 22	
Fan motor	2800 rpm – 230/400 V – 50 Hz – 4 kW	
Pump	E7 NC	
Resistance on pre-heaters	10,5 kW	
Head length	KN	KL
Complete burner code	**on request**	**on request**

Dimensions of gas trains and gas filters: see page 314

DIMENSIONS (mm)

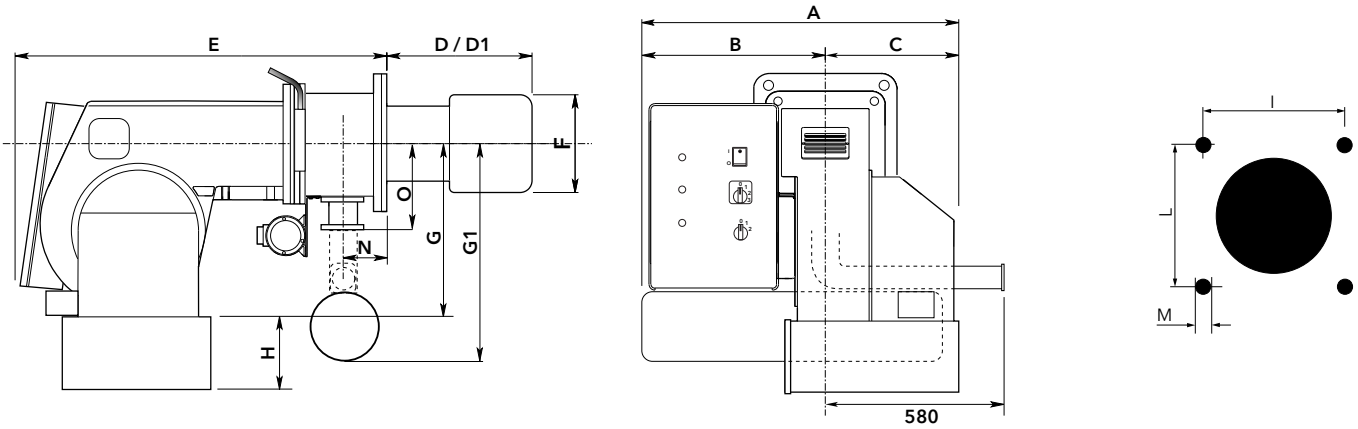

Model	A	B	C	D	D1	E	F	G	G1	H	N	O	I	L	M
GHO-TRON 3.2100 Z	848	530	318	295	455	1150	270	395	600	283	125	250	315	315	M16

* optional silencer

PACKAGING

The complete burner with combustion head is delivered in a single carton box with flexible hoses and operating manual including electrical terminal diagram and spare parts list.

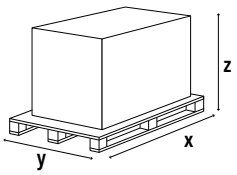

Model	Dimensions (mm)		
	X	Y	Z
GHO-TRON 3.2100 Z	1370	1140	950

GHO-TRON

GAS / HEAVY OIL

Low NOx Class 2

GHO-TRON 4 R

650 … 3900 kW
Two stage progressive/modulating mechanical

- **Fuels:** natural gas, Hi = 6,99 … 11,39 kWh/Nm³;
  heavy oil, viscosity 50°E at 50°C, Hi = 10,5…11,5 kWh/kg
- **Emission class:** Low NOx class 2 (≤120 mg/kWh) according to EN676 in gas
- **Protection level:** IP 42 (IP54 on request)

TECHNICAL DATA

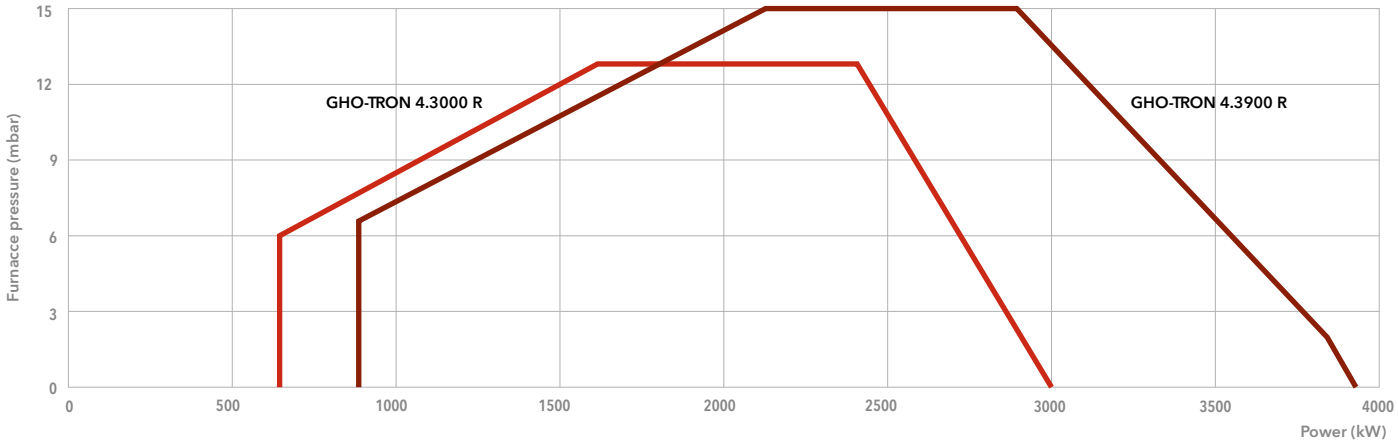

	GHO-TRON 4.3000 R		GHO-TRON 4.3900 R	
Operating range	650 – 3000 kW		875 – 3900 kW	
Fuel flow	57 – 264 kg/h		77 – 343 kg/h	
Nozzles	according to required power		according to required power	
Control box	LFL 1.333		LFL 1.333	
Fan motor	2800 rpm – 230/400 V – 50 Hz – 7,5 kW		2800 rpm – 230/400 V – 50 Hz – 9 kW	
Pump	TA 3C		TA 3C	
Resistance on pre-heaters	18 kW		21 kW	
Head length	KN	KL	KN	KL
Complete burner code	**on request**	**on request**	**on request**	**on request**

Dimensions of gas trains and gas filters: see page 314

DIMENSIONS (mm)

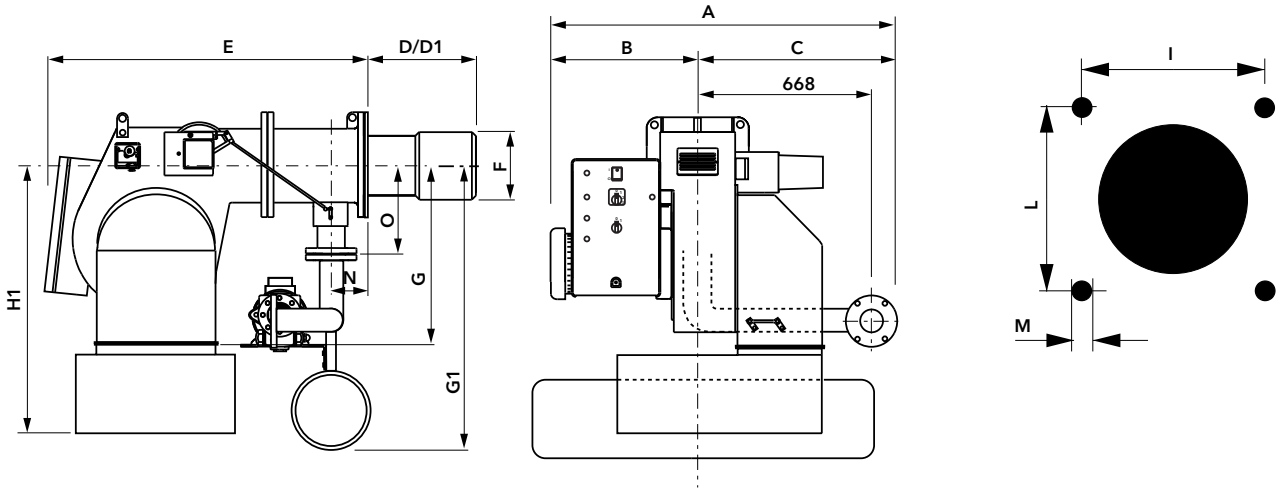

Model	A	B	C	D	D1	E	F	G	G1	H1*	N	O	I	L	M
GHO-TRON 4.3000 R	1288	610	678	330	530	1130	290	471	750	746	195	250	315	315	M16
GHO-TRON 4.3900 R	1288	610	678	345	545	1130	320	471	750	746	195	250	315	315	M16

* optional silencer

PACKAGING

The complete burner with combustion head is delivered in a single wooden box with gas train and filter, flexible hoses, boiler fixing accessories and technical documentation.

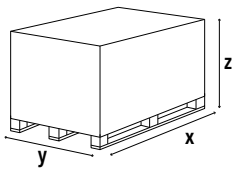

Model	Dimensions (mm)		
	X	Y	Z
GHO-TRON 4.3000 R	1580	1580	1050
GHO-TRON 4.3900 R	1580	1580	1050

GHO-TRON

GAS / HEAVY OIL

Low NOx Class 2

GHO-TRON 5 R

1200 … 5800 kW
Two stage progressive/modulating mechanical

- **Fuels:** natural gas, Hi = 6,99 … 11,39 kWh/Nm³;
  heavy oil, viscosity 50°E at 50°C, Hi = 10,5…11,5 kWh/kg
- **Emission class:** Low NOx class 2 (≤120 mg/kWh) according to EN676 in gas
- **Protection level:** IP 42 (IP54 on request)

TECHNICAL DATA

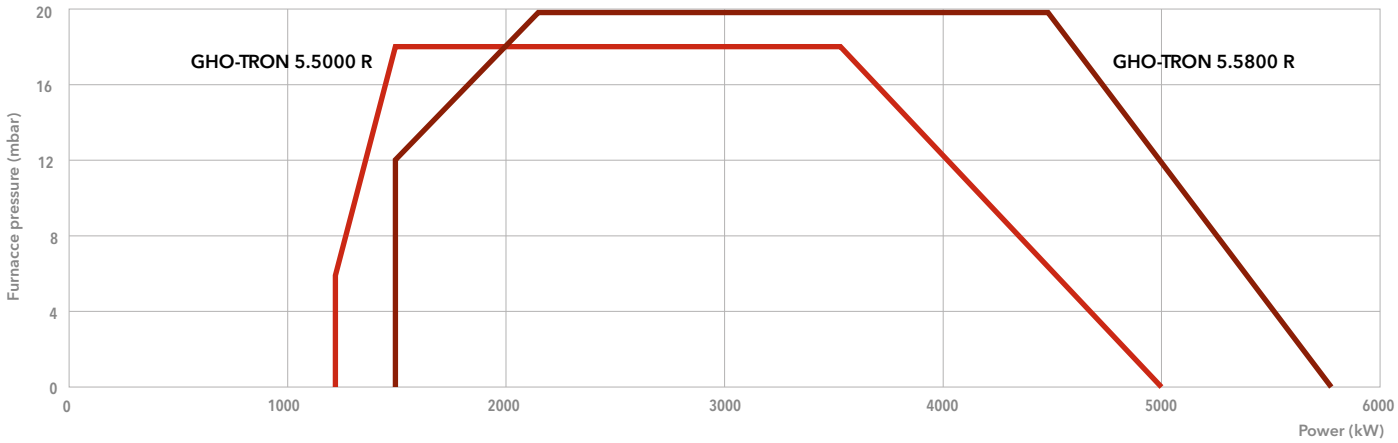

	GHO-TRON 5.5000 R		GHO-TRON 5.5800 R	
Operating range	1200 – 5000 kW		1500 – 5800 kW	
Fuel flow	106 – 440 kg/h		132 – 510 kg/h	
Nozzles	according to required power		according to required power	
Control box	LFL 1.333		LFL 1.333	
Fan motor	2800 rpm – 230/400 V – 50 Hz – 11 kW		2800 rpm – 230/400 V – 50 Hz – 15 kW	
Pump	TA 4C		TA 4C	
Resistance on pre-heaters	24 kW		24 kW	
Head length	KN	KL	KN	KL
Complete burner code	**on request**	**on request**	**on request**	**on request**

Dimensions of gas trains and gas filters: see page 314

DIMENSIONS (mm)

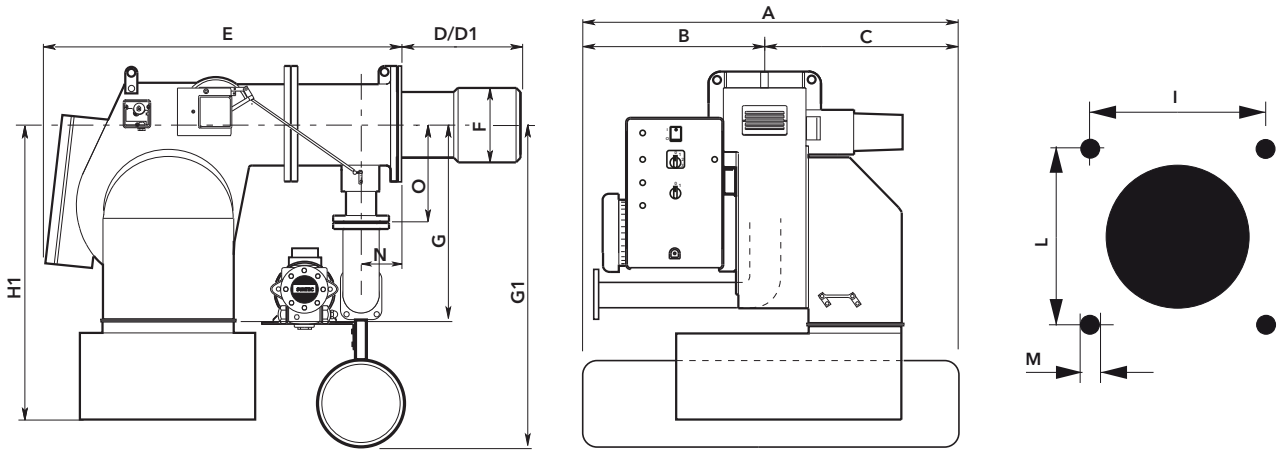

Model	A	B	C	D	D1	E	F	G	G1	H1*	N	O	I	L	M
GHO-TRON 5.5000 R	1358	680	678	354	554	1230	320	570	775	965	195	250	330	330	M16
GHO-TRON 5.5800 R	1358	680	678	354	554	1230	320	570	775	965	195	250	330	330	M16

* optional silencer

PACKAGING

The complete burner with combustion head is delivered in a single wooden box with gas train and filter, flexible hoses, boiler fixing accessories and technical documentation.

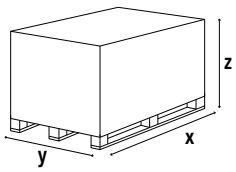

Model	Dimensions (mm)		
	X	Y	Z
GHO-TRON 5.5000 R	1580	1580	1050
GHO-TRON 5.5800 R	1580	1580	1050

GHO-TRON

GAS / HEAVY OIL

Low NOx Class 2

GHO-TRON 6 R

1500 … 13000 kW
Two stage progressive/modulating mechanical

- **Fuels:** natural gas, Hi = 6,99 … 11,39 kWh/Nm³;
  heavy oil, viscosity 50°E at 50°C, Hi = 10,5…11,5 kWh/kg
- **Emission class:** Low NOx class 2 (≤120 mg/kWh) according to EN676 in gas
- **Protection level:** IP 42 (IP54 on request)

TECHNICAL DATA

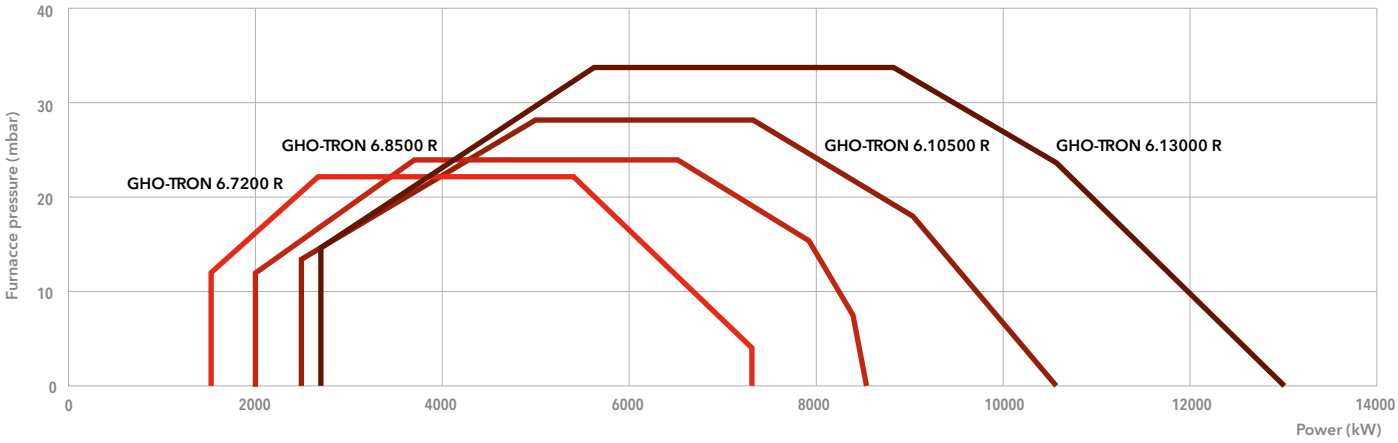

	GHO-TRON 6.7200 R		GHO-TRON 6.8500 R		GHO-TRON 6.10500 R		GHO-TRON 6.13000 R	
Operating range	1500 – 7500 kW		2000 – 8500 kW		2500 – 10500 kW		2700 – 13000 kW	
Fuel flow	132 – 660 kg/h		176 – 750 kg/h		220 – 920 kg/h		240 – 1100 kg/h	
Nozzles	according to required power		according to required power		according to required power		according to required power	
Control box	LFL 1.333		LFL 1.333		LFL 1.333		LFL 1.333	
Fan motor	2800 rpm – 230/400 V 50 Hz – 15 kW		2800 rpm – 230/400 V 50 Hz – 18,5 kW		2800 rpm – 230/400 V 50 Hz – 22 kW		2800 rpm – 230/400 V 50 Hz – 37 kW	
Pump	TA 5C		TA 5C		T5 + TV		T5 + TV	
Resistance on pre-heaters	30 kW		30 kW		44 kW		60 kW	
Head length	KN	KL	KN	KL	KN	KL	KN	KL
Complete burner code	**on request**	**on request**	**on request**	**on request**	**on request**	**on request**	**on request**	**on request**

Dimensions of gas trains and gas filters: see page 314

DIMENSIONS (mm)

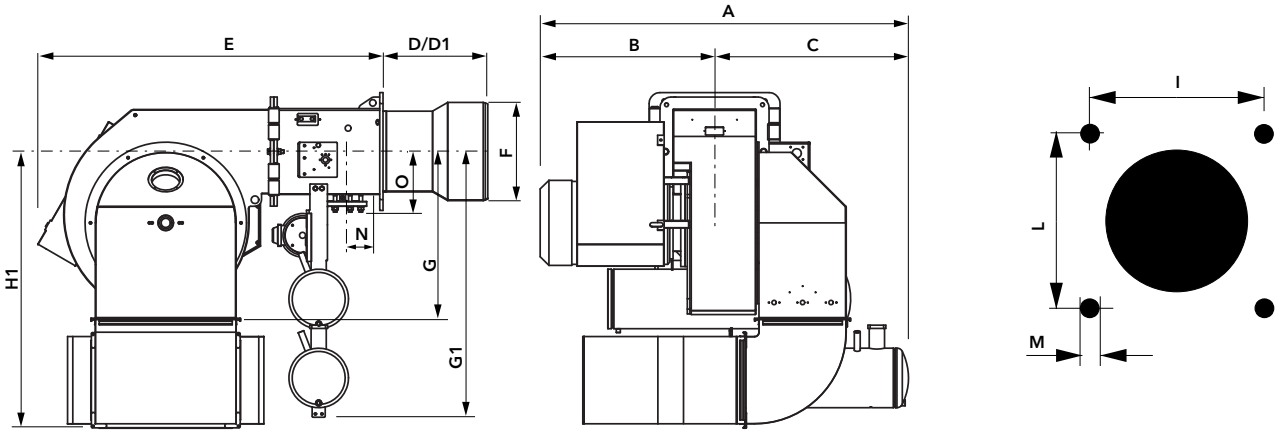

Model	A	B	C	D	E	F	G	G1	H1*	N	O	I	L	M
GHO-TRON 6.7200 R	1370	740	630	470	1640	420	775	850	1270	195	232	460	460	M20
GHO-TRON 6.8500 R	1370	740	630	470	1640	420	775	850	1270	195	232	460	460	M20
GHO-TRON 6.10500 R	1500	740	760	470	1640	420	775	850	1270	195	232	460	460	M20
GHO-TRON 6.13000 R	1700	800	900	470	1640	450	775	1200	1270	195	232	460	460	M20

* optional silencer

PACKAGING

The complete burner with combustion head is delivered in a single wooden box with gas train and filter, flexible hoses, boiler fixing accessories and technical documentation.

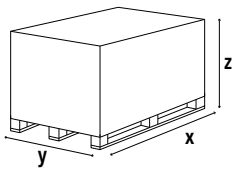

Model	Dimensions (mm)		
	X	Y	Z
GHO-TRON 6.7200 R	2400	1800	1600
GHO-TRON 6.8500 R	2400	1800	1600
GHO-TRON 6.10500 R	2400	1800	1600
GHO-TRON 6.13000 R	2400	1800	1600

GHO-TRON

GAS / HEAVY OIL

Low NOx Class 2

GHO-TRON 7 R

3690 … 17000 kW
Two stage progressive/modulating mechanical

- **Fuels:** natural gas, Hi = 6,99 … 11,39 kWh/Nm³;
  heavy oil, viscosity 50°E at 50°C, Hi = 10,5…11,5 kWh/kg
- **Emission class:** Low NOx class 2 (≤120 mg/kWh) according to EN676 in gas
- **Protection level:** IP 42 (IP54 on request)

TECHNICAL DATA

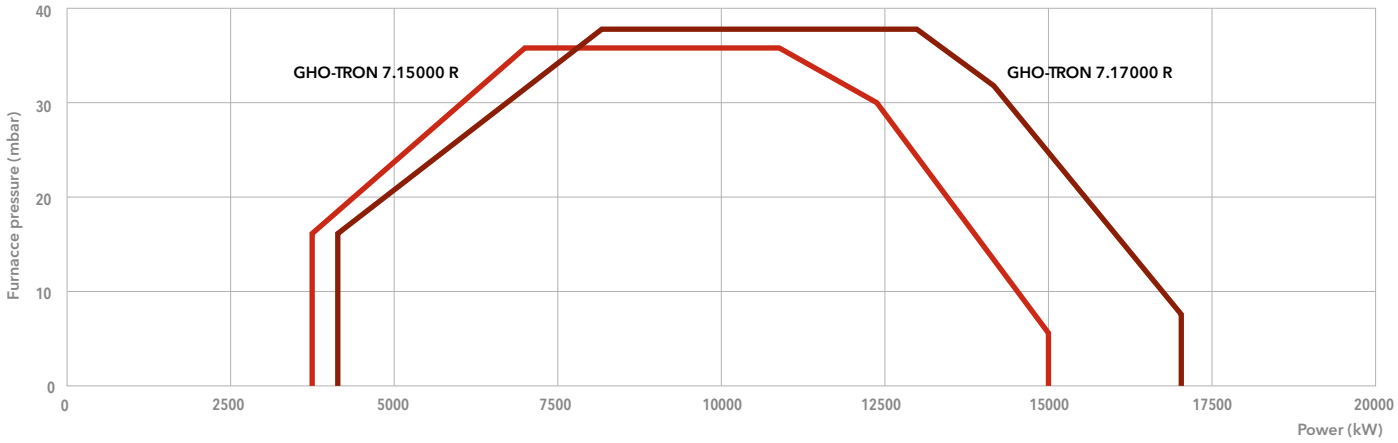

	GHO-TRON 7.15000 R		GHO-TRON 7.17000 R	
Operating range	3690 – 15000 kW		4000 – 17000 kW	
Fuel flow	325 – 1320 kg/h		350 – 1495 kg/h	
Nozzles	according to required power		according to required power	
Control box	LFL 1.333		LFL 1.333	
Fan motor	2800 rpm – 230/400 V – 50 Hz – 45 kW		2800 rpm – 230/400 V – 50 Hz – 55 kW	
Pump	T5 + TV		T5 + TV	
Resistance on pre-heaters	75 kW		75 kW	
Head length	KN	KL	KN	KL
Complete burner code	**on request**	**on request**	**on request**	**on request**

Dimensions of gas trains and gas filters: see page 314

DIMENSIONS (mm)

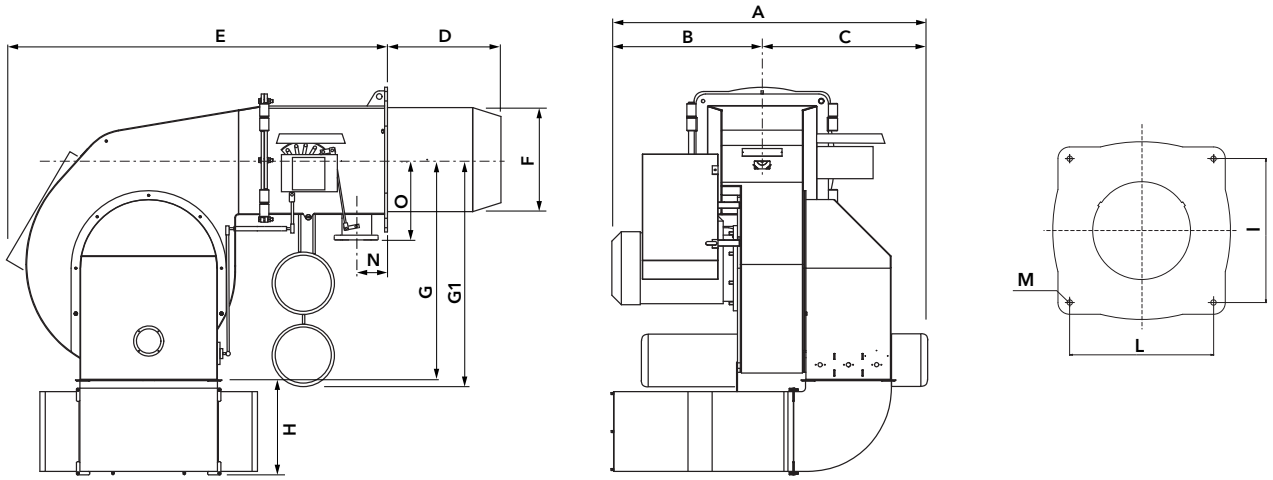

Model	A	B	C	D	E	F	G	G1	H*	N	O	I	L	M
GHO-TRON 7.15000 R	1948	860	1088	590	1910	550	1167	1220	530	210	320	620	620	M20
GHO-TRON 7.17000 R	1948	860	1088	590	1910	550	1167	1220	530	210	320	620	620	M20

* optional silencer

PACKAGING

The complete burner with combustion head is delivered in a single wooden box with gas train and filter, flexible hoses, boiler fixing accessories and technical documentation.

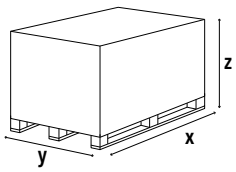

Model	Dimensions (mm)		
	X	Y	Z
GHO-TRON 7.15000 R	2800	2100	2000
GHO-TRON 7.17000 R	2800	2100	2000

DUOBLOCK

DUOBLOCK BURNERS
FROM 230 TO 80000 kW
GAS, LIGHT OIL, HEAVY OIL AND DUAL FUEL

ALL THE BENEFITS OF THE SEPARATE VENTILATION

In contrast to monoblock burners, duoblock burners are made up of two units, or blocks, as the name implies: the burner head with the air inlet, and the separately-installed fan; the two units are connected via an air duct.
The separate installation of the fan offers several benefits:
• the fan can be installed in a separate room, for instance in the cellar; this results in considerably lower noise levels in the boiler room;
• less space required in front of the boiler and in the combustion chamber;
• individual fan layout with optimum adaptation of the fan characteristic curve to suit the pressure ratio of the heat generator; this guarantees pulsation-free and stable burner behaviour, even on heat generators with high resistance on the exhaust side;
• combustion air can be pre-heated to increase installation efficiency;
• lower weight loading on the boiler front.

EXTREME FLEXIBILITY AND VERSATILITY

ELCO duoblock burners are designed to satisfy the widest range of needs and can be applied to the most various type of civil and industrial solutions like fire-tube boilers, water-tube boilers, dryers and melting furnaces.
These burners enable installation to realize a modular and flexible combustion solution with a high degree of personalization. This resultes in a high performance installations at the lowest running cost.
The burners are built to be connected to an external air supply and can be supplied together with built-in or separate control panel, electronic or mechanical adjustment, flue gas recirculation, heavy oil pump unit and heating unit.

A COMPLETE RANGE OF OPTIONS

ELCO is able to offer an extremely wide range of industrial duoblock burners thanks to its well-known series, EK-DUO, RPD, D-TRON, and the new RPD N range, covering a power range from 230 kW up to 80 MW.
This range of burners is able to fulfill high capacity and high turndown needs and allows installation in very high pressurized combustion chambers.
All duoblock models can work with pre-heated combustion air up to 200°C and can be used in order to achieve greater values of efficiency.
Versions suitable to work with hydrogen and other alternative fuels are available on request.

RANGE OVERVIEW

/ D-TRON
230 / 42000 kW

/ EK-DUO
600 / 16000 kW

/ RPD
500 / 80000 kW

/ RPD N
3000 / 80000 kW

/ LOW NOx / ULTRA LOW NOx
up to 80000 kW

D-TRON

MAIN TECHNICAL FEATURES

- Two stages and progressive/modulating forced draught burners, designed to be connected to an external air supply
- Fuels: natural gas, light oil, heavy oil; other fuels on request;
- Max inlet air temperature: 200°C (versions suitable to work with temperature up to 250°C in order to achieve greater values of efficiency are also available according to feasibility);
- Electrical switch cabinet manufactured in different configurations assembled on the burner or delivered separately and includes the burner control:
  - control box for burner operation sequences;
  - contactors and remote overload cut-out for control of the fan unit;
  - fuse to protect the auxiliary equipment;
  - switches, warning and information lights, manual power control;
  - ready to accept PID power regulator (option)
- Gas train factory assembled and tested for tightness and electrical security
- Electronic version available on request

EK-DUO

MAIN TECHNICAL FEATURES

- Progressive/modulating forced draught burners, designed to be connected to an external air supply
- Fuels: natural gas, light oil; other fuels on request;
- Flame tube length according to installation
- Secured burner head adjustments during maintenance
- Closing of the air damper on burner shutdown
- Control box: built-in or external according to customer requirements
- Gas train factory assembled and tested for tightness and electrical security

RPD

MAIN TECHNICAL FEATURES

- Progressive/modulating forced draught burner with register, designed to be connected to an external air supply
- Fuels: natural gas, light oil, heavy oil, hydrogen; other fuels and co-combustion of various fuels or to eliminate liquid waste on request
- Air/gas ratio with Etamatic digital control box
- Adjustable flame length with air registers
- Flame tube length according to installation
- Closing of the air damper on burner shutdown
- Control box: built-in or external according to customer requirements
- Gas train factory assembled and tested for tightness and electrical security

RPD N

MAIN TECHNICAL FEATURES

- Progressive/modulating forced draught burner with register, designed to be connected to an external air supply
- Fuels: natural gas; other fuels on request
- Flexible and modular burner concept with reduced weight and product complexity compared to the RPD range
- Adjustable flame length with air registers
- New combustion head design with sliding components to change the length of the head
- New standardized design of the switch cabinet in order to offer a more industrial and flexible solution to the end user
- Closing of the air damper on burner shutdown
- Control box: built-in or external according to customer requirements
- Gas train factory assembled and tested for tightness and electrical security

D-TRON

ALL FUELS

Low NOx Class 3

D-TRON 2 ... 9

230 ... 42000 kW

Two stages, two stage progressive/modulating mechanical or electronic

- **Fuels:** natural gas, Hi = 6,99 … 11,39 kWh/Nm³;
  light oil, viscosity 6 mm²/s at 20°C, Hi = 11,86 kWh/kg;
  heavy oil, viscosity 20…350 mm²/s at 50°C;
  other fuels on request
- **Emission class:** Low NOx class 3 models (in gas) available on request;
  Versions with FGR System (≤30 mg/kWh) also available on request
- **Protection level:** IP 41 (IP 54 and IP 65 on request)

RANGE OVERVIEW

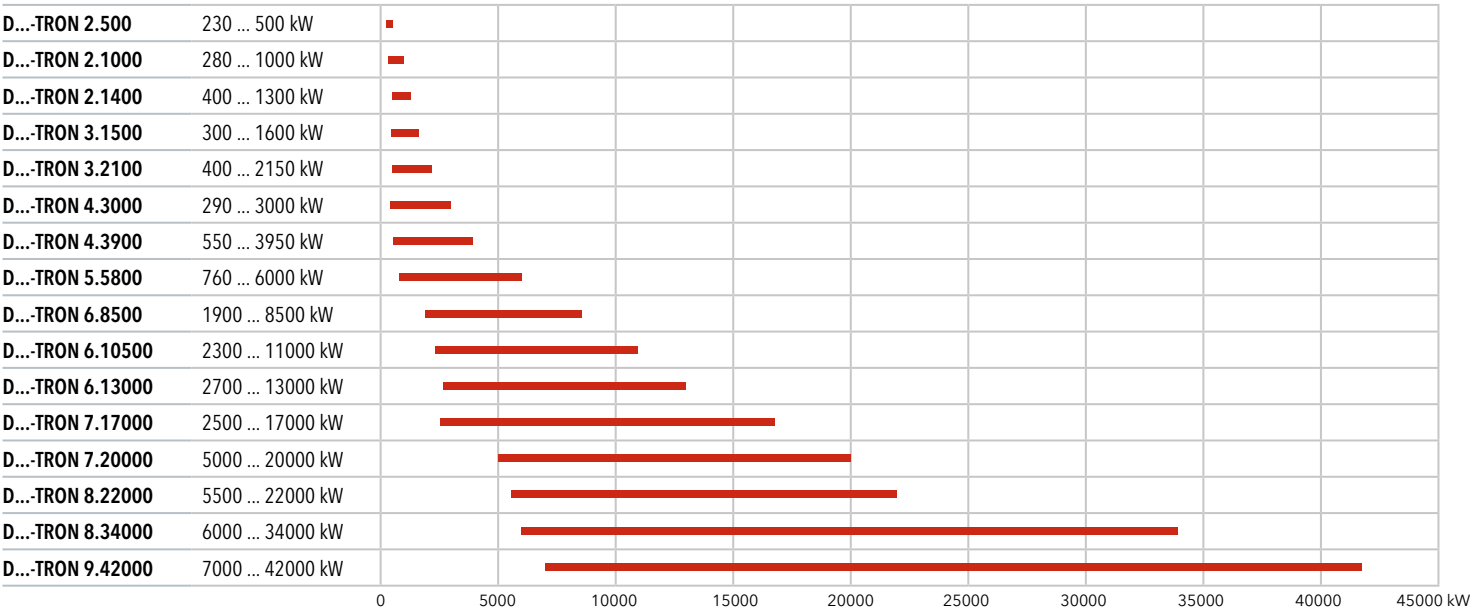

AVAILABLE CONFIGURATIONS

Model	Gas DG-TRON		Gas/light oil DGL-TRON			Light oil DL-TRON			Heavy oil DO-TRON	Gas/heavy oil DGO-TRON
	Progressive mechanical or electronic		Two stages	Progressive mechanical or electronic		Two stages	Progressive mechanical or electronic		Progressive mechanical or electronic	Progressive mechanical or electronic
	Class 2	Low NOx Class 3	Class 2	Class 2	Low NOx Class 3	Class 2	Class 2	Low NOx Class 3	-	Class 2 in gas
D...-TRON 2.500	●	●								
D...-TRON 2.1000	●	●	●							
D...-TRON 2.1400	●		●							
D...-TRON 3.1500		●								
D...-TRON 3.2100	●	●	●	●	○	●	●	○	●	
D...-TRON 4.3000	●	●		●	○		●	○	●	●
D...-TRON 4.3900	●	●		●	○		●	○	●	●
D...-TRON 5.5800	●	●		●	○		●	○	●	●
D...-TRON 6.8500	●	●		●	○		●	○	●	●
D...-TRON 6.10500	●	●		●	○		●	○	●	●
D...-TRON 6.13000	●	●		●	○		●	○	●	●
D...-TRON 7.17000	●	●		●	○		●	○	●	●
D...-TRON 7.20000		●								
D...-TRON 8.22000		●								
D...-TRON 8.34000		●								
D...-TRON 9.42000		●								

●: Standard versions
○: Models available on request

DIMENSIONS (mm)

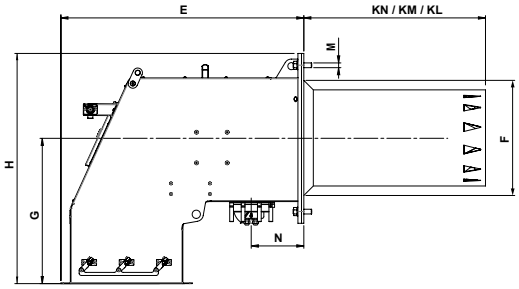

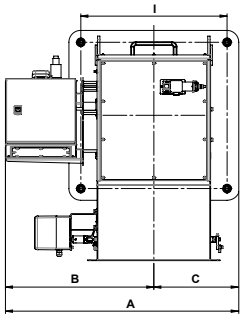

Connecting flange

D...-TRON 2...6

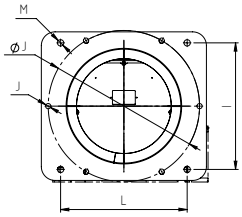

D...-TRON 7...9

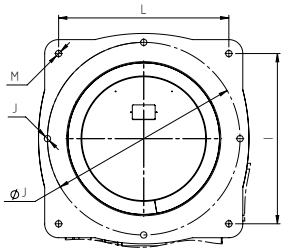

Model	A	B	C	KN	KM	KL	E	F	G	H	I	L	M	N
D...-TRON 2.500	523	307	216	205	284	394	556	160	290	415	185/200	185/200	4xM10	140*
D...-TRON 2.1000	523	307	216	205	284	394	556	190	290	415	185/200	185/200	4xM10	140*
D...-TRON 2.1400	523	307	216	345	445	545	556	200	290	415	185/200	185/200	4xM10	140*
D...-TRON 3.1500	620	376	373	345	445	545	556	205	290	415	185/200	185/200	4xM10	140*
D...-TRON 3.2100	584	420	164	345	445	545	637	224	379	545	270	270	4xM16	125
D...-TRON 4.3000	623	440	183	400	540	640	650	263	375	545	270	270	4xM16	125
D...-TRON 4.3900	746	530	216	400	550	640	798	310	392	587	315	315	4xM16	190
D...-TRON 5.5800	746	536	210	450	560	690	847	325	409	619	330	330	4xM16	195
D...-TRON 6.8500	907	602	305	490	630	770	802	377	480	760	485	485	4xM20	195
D...-TRON 6.10500	998	638	360	490	640	790	1040	420	556	889	620	620	4xM20	195
D...-TRON 6.13000	998	638	360	490	640	790	1030	440	622	982	620	620	4xM20	195
D...-TRON 7.17000	1056	673	383	590	710	810	1480	497	676	982	620	620	4xM20	210
D...-TRON 7.20000	1099	706	393	640	760	810	1054	580	653	1055	695	695	4xM20	210
D...-TRON 8.22000	1307	835	472	640	760	850	1549	712	767	1248	800	800	4xM20	400
D...-TRON 8.34000	1307	835	472	700	850	950	1549	712	767	1248	800	800	4xM20	400
D...-TRON 9.42000	1508	918	590	700	850	950	1519	855	900	1490	1020	1020	4xM20	400

*: gas train connection on the right side of the burner up to the model D...-TRON 3.1500

Air duct

2.500...4.3000

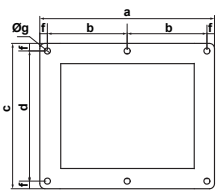

4.3900...6.8500

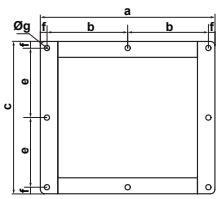

6.10500/130000

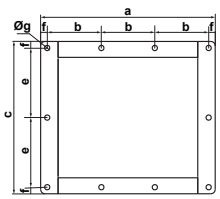

7.17000/20000

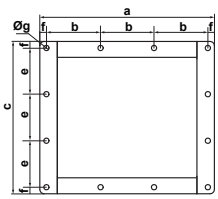

8.22000/34000

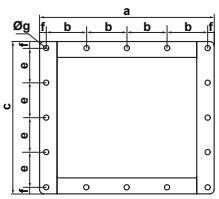

9.4200

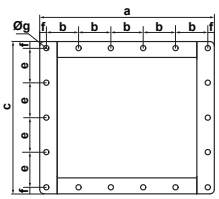

Model	a	b	c	d	e	f	Øg
D...-TRON 2.500...3.1500	303	136,5	252	222	-	15	6x R12
D...-TRON 3.2100/4.3000	345	157,5	287	257	-	15	6x R12
D...-TRON 4.3900	400	185	349	-	159,5	15	8x R12
D...-TRON 5.5800	470	220	361	-	165,5	15	8x R12
D...-TRON 6.8500	506	234	402	-	182	19	10x R14
D...-TRON 6.10500	557	173	474	-	218	19	10x R14
D...-TRON 6.13000	557	173	561	-	261,5	19	10x R14
D...-TRON 7.17000	730	230,7	650	-	204	19	12x R14
D...-TRON 7.20000	696	226	614	-	192	19	12x R14
D...-TRON 8.22000/34000	930	223	828	-	197,5	19	16x R14
D...-TRON 9.42000	1042	200,8	828	-	197,5	19	18x R14

! Drawings and dimensions (in mm) make reference to a Low NOx class 3 burner in electronic version: they are shown for informational purposes only and may vary according to the chosen configuration

EK-DUO

GAS / LIGHT OIL

Low NOx Class 3

EK-DUO 2 ... 4

600 ... 16000 kW
Two stage progressive/modulating electronic

- **Fuels:** natural gas, Hi = 6,99 … 11,39 kWh/Nm³;
  light oil, viscosity 6 mm²/s at 20°C, Hi = 11,86 kWh/kg;
  other fuels on request
- **Emission class:** Low NOx class 3 (≤80 mg/kWh) according to EN676 in gas and
  Low NOx class 3 (≤120 mg/kWh) according to EN267 in light oil
  Versions with FGR System (≤30 mg/kWh) also available on request
- **Protection level:** IP 41 (IP 54 and IP 65 on request)

RANGE OVERVIEW

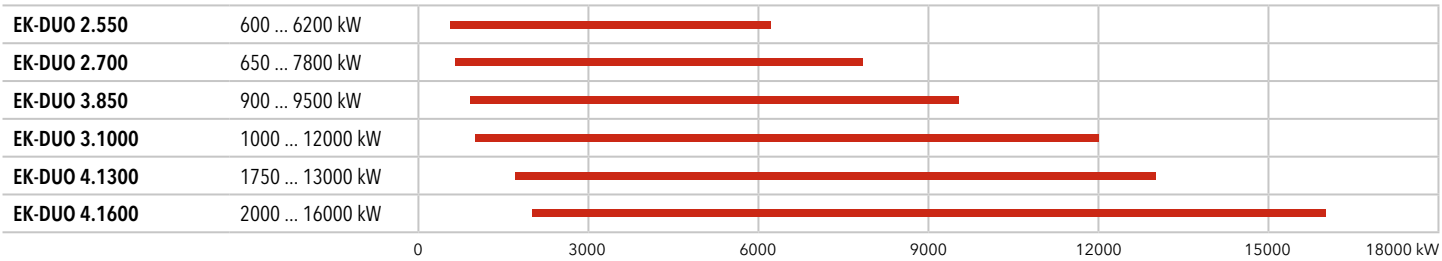

AVAILABLE CONFIGURATIONS

Model	Weight (kg)	Fuel			Operation	NOx emissions
		Gas	Gas/Light oil	Light oil	Electronic	Low NOx class 3
EK-DUO 2.550	320 ... 400	●	●	●	●	●
EK-DUO 2.700	320 ... 400	●	●	●	●	●
EK-DUO 3.850	400 ... 470	●	●	●	●	●
EK-DUO 3.1000	400 ... 470	●	●	●	●	●
EK-DUO 4.1300	400 ... 420	●	●	●	●	●
EK-DUO 4.1600	400 ... 420	●	●	●	●	●

DIMENSIONS (mm)

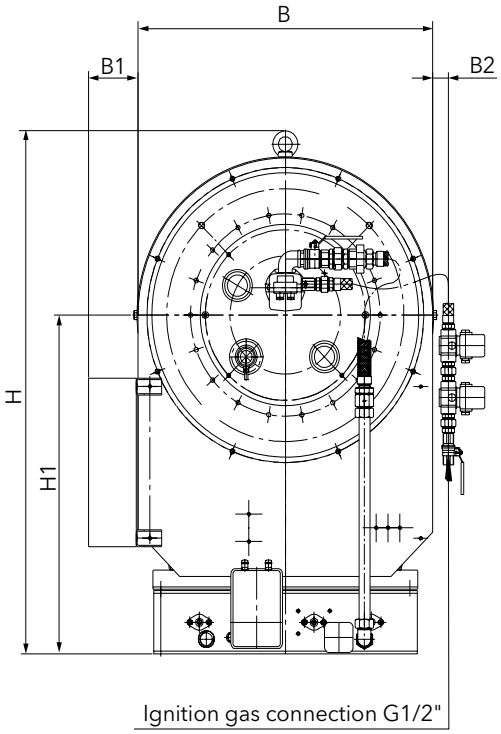

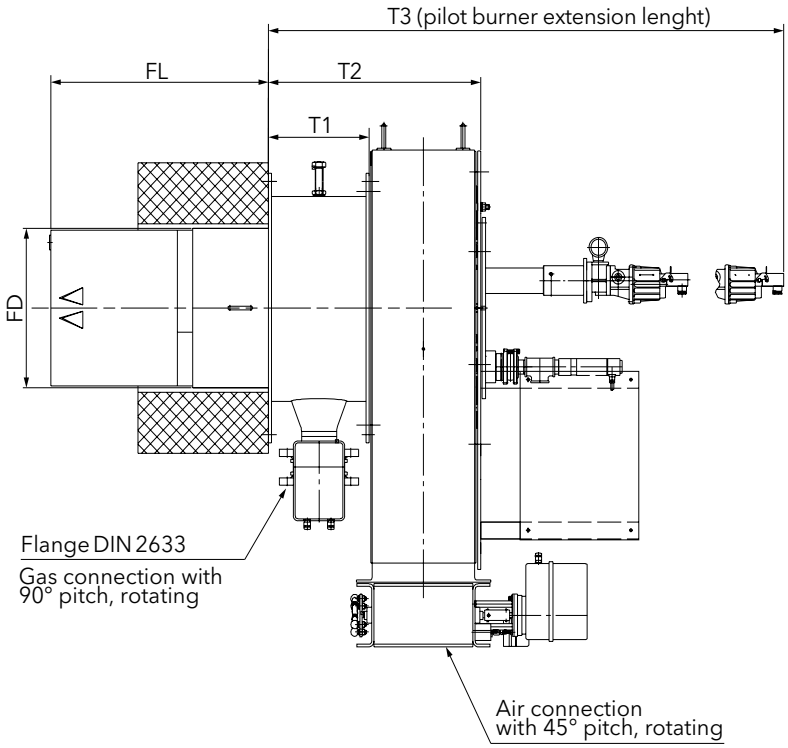

Air connection flange

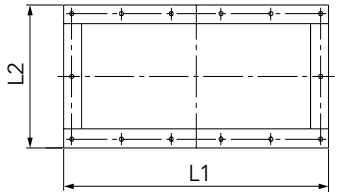

Details of boiler front plate

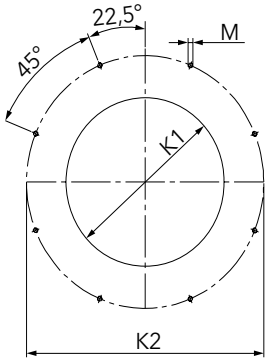

Model	Gas connection	H	H1	B	B1	B2*	T1	T2	T3*	FL*	FD*	L1	L2	K1	K2	M
EK-DUO 2.550	DN80	1241	804	750	125	40	255	537	2005 ... 2150	320 ... 570	378	670	340	400	600	M12
EK-DUO 2.700	DN80	1241	804	750	125	40	255	537	2005 ... 2150	320 ... 570	378	670	340	400	600	M12
EK-DUO 3.850	DN80	1481	944	950	120	40	290	622	1810 ... 2390	350 ... 590	441 ... 456	827	386	480	690	M12
EK-DUO 3.1000	DN80	1481	944	950	120	40	290	622	1810 ... 2390	350 ... 590	441 ... 456	827	386	480	690	M12
EK-DUO 4.1300	DN100	1491	929	1000	122	40	420	802	2600 ... 2770	350 ... 620	506	840	440	525	725	M20
EK-DUO 4.1600	DN100	1491	929	1000	122	40	420	802	2600 ... 2770	350 ... 620	506	840	440	525	725	M20

! Drawings and dimensions make reference to a standard burner version: they are shown for informational purposes only and may vary according to the chosen configuration.

RPD

ALL FUELS

Low NOx Class 3

RPD 20 ... 160

500 ... 80000 kW
Two stage progressive/modulating electronic

- **Fuels:** natural gas, Hi = 6,99 … 11,39 kWh/Nm³;
  light oil, viscosity 6 mm²/s at 20°C, Hi = 11,86 kWh/kg;
  heavy oil, viscosity 20…350 mm²/s at 50°C;
  hydrogen and other fuels on request;
  co-combustion of various fuels or to eliminate liquid waste on request
- **Emission class:** Low NOx class 3 (≤80 mg/kWh) or class 2 (≤120 mg/kWh)
  according to EN676 in gas;
  Low NOx class 3 (≤120 mg/kWh) or class 2 (≤185 mg/kWh)
  according to EN267 in light oil
  Versions with FGR System (≤30 mg/kWh) also available on request
- **Protection level:** IP 41 (IP 54 and IP 65 on request)

RANGE OVERVIEW

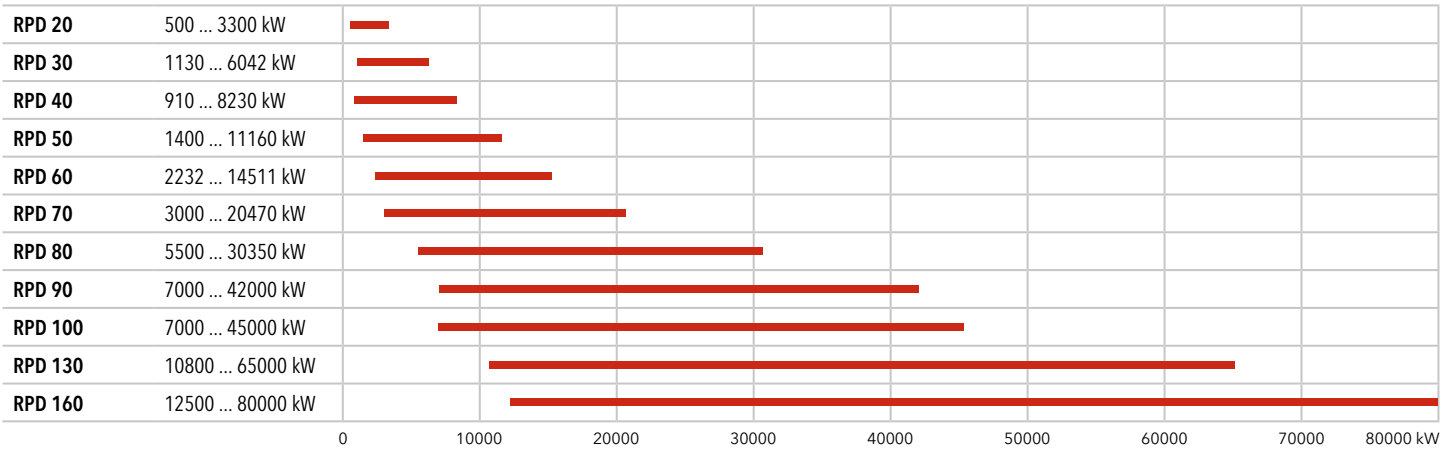

AVAILABLE CONFIGURATIONS

Model	Approx. weight (kg)	Fuel					Operation	NOx emissions	
		Gas	Gas/Light oil	Light oil	Heavy oil	Gas/Heavy oil	Electronic	Class 2	Class 3
RPD 20	370	●	●	●	●	●	●	●	●
RPD 30	400	●	●	●	●	●	●	●	●
RPD 40	430	●	●	●	●	●	●	●	●
RPD 50	550	●	●	●	●	●	●	●	●
RPD 60	600	●	●	●	●	●	●	●	●
RPD 70	760	●	●	●	●	●	●	●	●
RPD 80	1060	●	●	●	●	●	●	●	●
RPD 90	1200	●	●	●	●	●	●	●	●
RPD 100	1250	●	●	●	●	●	●	●	●
RPD 130	2850	●	●	●	●	●	●	●	●
RPD 160	3080	●	●	●	●	●	●	●	●

DIMENSIONS (mm)

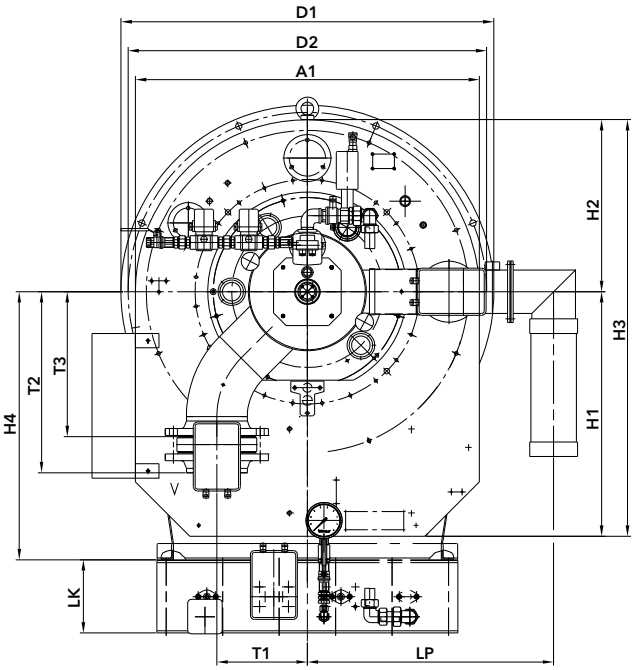

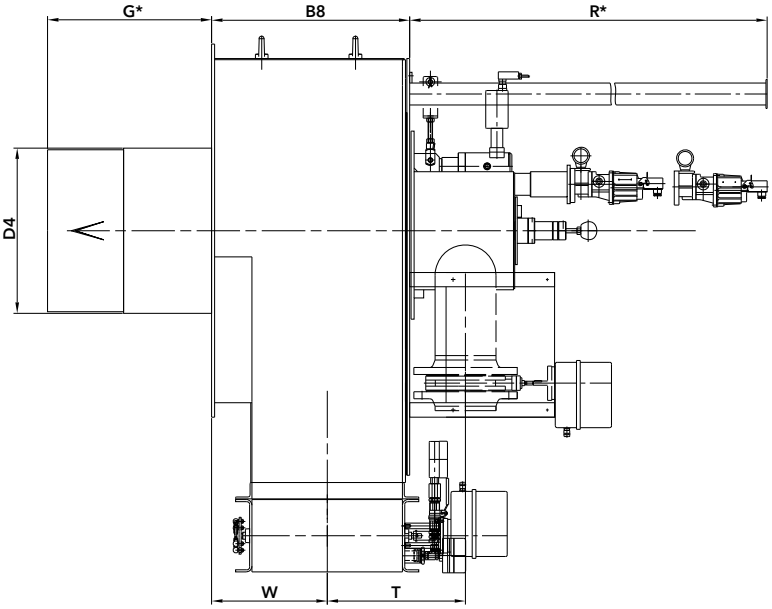

Air connection flange

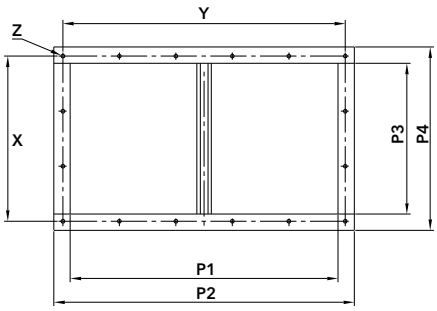

Details of boiler front plate

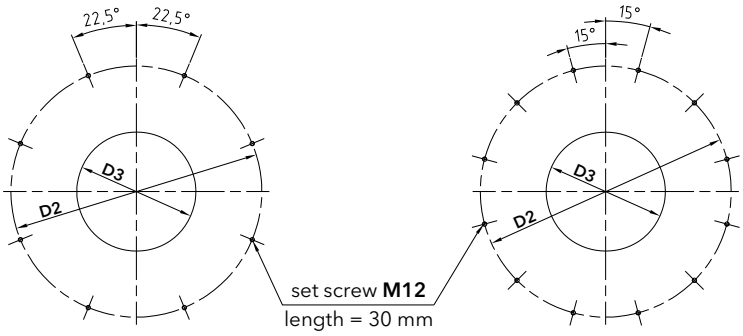

RPD 20 - 60 **RPD 70 - 100**

Model	A1	B8	D1	D2	D3	D4	D7	H1	H2	H3	H4	P1	P2	P3	P4	T	T1	T2	T3	V	W	X	Y	Z	LK	LP
RPD 20	*values dependent on design variant*																									
RPD 30	745	428	830	790	385	371	17,5	620	373	993	650	580	670	320	410	342	192	458	362	DN80	248	4X92	5x126	10	202	594
RPD 40	745	428	830	790	423	409	17,5	620	373	993	650	580	670	320	410	342	192	458	362	DN80	248	4x92	5x126	10	202	594
RPD 50	950	547	1030	990	470	456	17,5	675	475	1150	740	740	830	416	506	382	250	500	400	DN150	319	3x152	5x156	10	202	680
RPD 60	994	634	1080	1040	520	506	18	700	497	1197	825	750	840	470	560	439	270	520	420	DN150	379	4x129	5x160	10	202	704
RPD 70	1160	731	1240	1200	640	626	18	780	580	1360	900	936	1026	600	690	501	365	479	479	DN150	410	5x128	7x140	10	202	841
RPD 80	1350	860	1450	1400	740	710	18	820	675	1495	1000	1102	1192	700	790	561	310	647	547	DN150	489	6x125	9x128	10	202	909
RPD 90	1700	890	1800	1750	883	870	18	905	850	1755	1100	1300	1390	742	832	618	310	743	643	DN150	494	6x132	10x135	10	202	1043
RPD 100	1700	890	1800	1750	935	922	18	905	850	1755	1100	1300	1390	742	832	618	310	743	643	DN150	494	6x132	10x135	10	202	1043
RPD 130	*values dependent on design variant*																									
RPD 160	*values dependent on design variant*																									

*: value G and R are defined based on the coating of the boiler

! Drawings and dimensions make reference to a standard burner version: they are shown for informational purposes only and may vary according to the chosen configuration.

RPD N

GAS

Low NOx Class 3

RPD 70 N ... 160 N

3000 ... 80000 kW
Two stage progressive/modulating electronic

- **Fuels:** natural gas, Hi = 6,99 … 11,39 kWh/Nm³;
- **Emission class:** Low NOx class 3 (≤80 mg/kWh) according to EN676 with U1 and U2 heads;
  Low NOx class 4 (≤60 mg/kWh) according to EN676 with FX heads;
  Versions with FGR System (≤30 mg/kWh) also available on request
- **Protection level:** IP 54 (IP 65 on request)

RANGE OVERVIEW

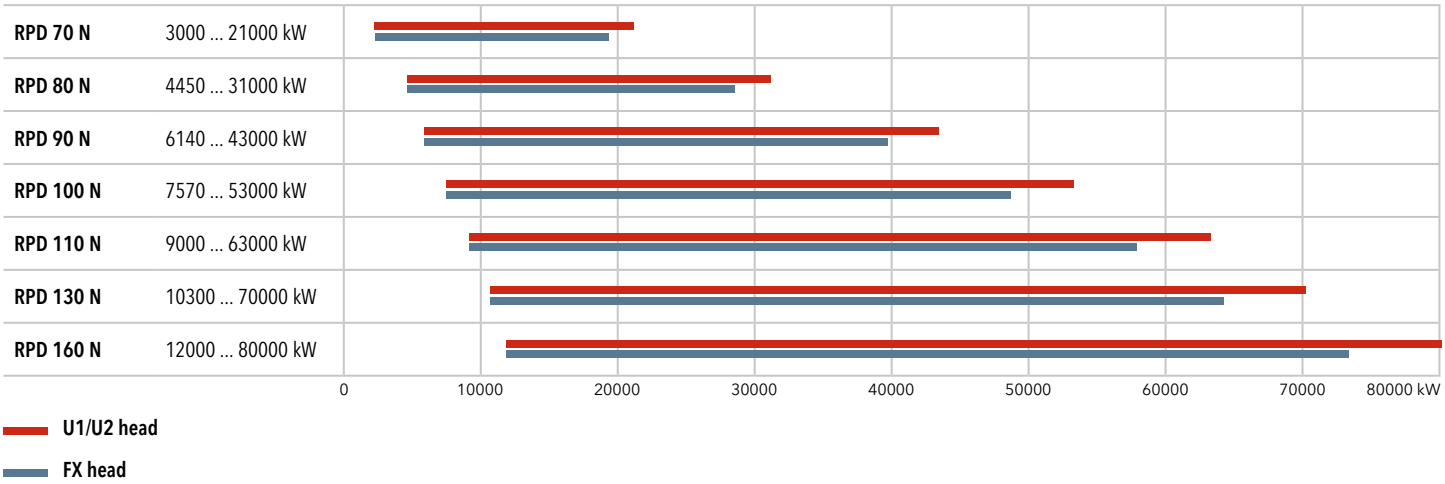

AVAILABLE CONFIGURATIONS

Model	Combustion head			
	Type	NOx emission	Sliding system	Primary air
RPD 70 N	U1/U2	80 mg/kWh	●	
	FX	50 mg/kWh		●
RPD 80 N	U1/U2	80 mg/kWh	●	
	FX	50 mg/kWh		●
RPD 90 N	U1/U2	80 mg/kWh	●	
	FX	50 mg/kWh		●
RPD 100 N	U1/U2	80 mg/kWh	●	
	FX	50 mg/kWh		●
RPD 110 N	U1/U2	80 mg/kWh	●	
	FX	50 mg/kWh		●
RPD 130 N	U1/U2	80 mg/kWh	●	
	FX	50 mg/kWh		●
RPD 160 N	U1/U2	80 mg/kWh	●	
	FX	50 mg/kWh		●

DIMENSIONS (mm)

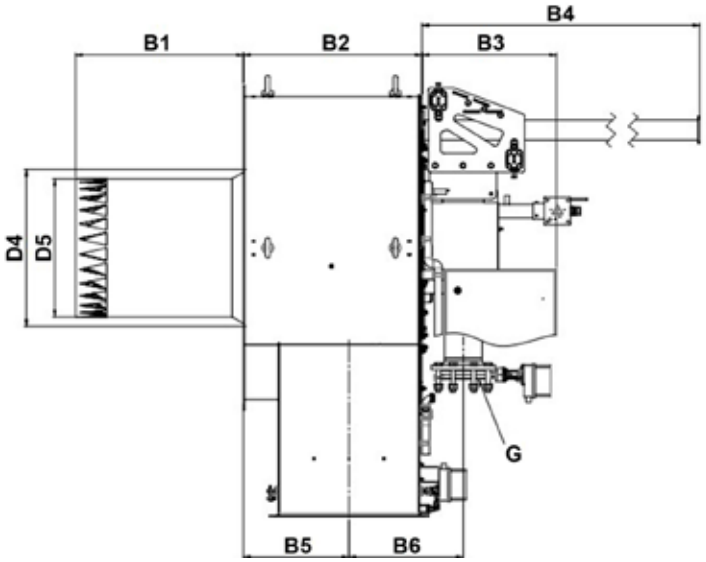

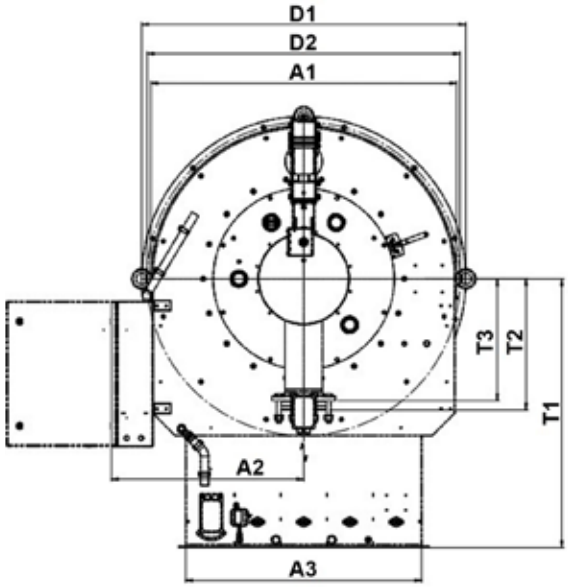

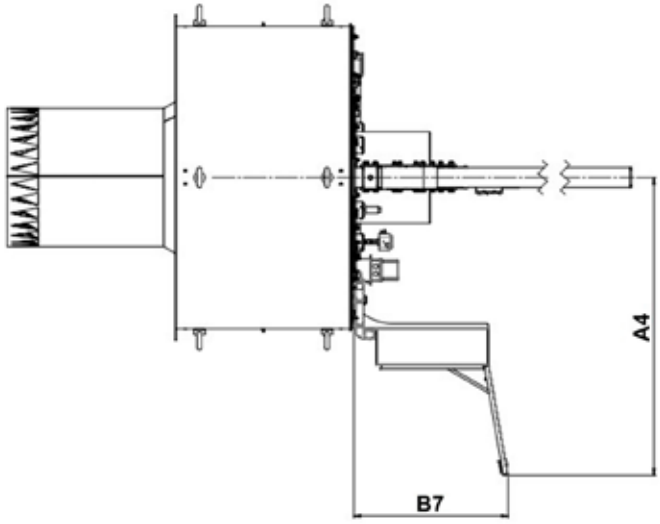

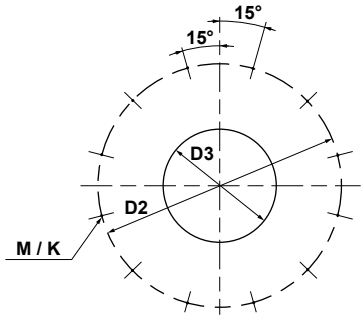

	A1	A2	A3	A4 (1)	D1	D2	D3	D4	D5	B1 (2) KN	B1 (2) KM	B1 (2) KL	B2	B3	B4 (3)	B5 (4)	B6	B7	T1	T2	T3	G	M (5)	K (6)
RPD 70 N	1368	860	1054	1330	1450	1400	750	727	617	600	750	900	799	600	2337	475	511	690	1200	586	544	DN150-P16	16	80
RPD 80 N									701															
RPD 90 N	1710	1035	1412	1501	1800	1750	995	985	856	850	1050	1250	1030	600	2843	590	669	690	1300	676	630	DN200-P16	16	80
RPD 100 N									906															
RPD 110 N									956															
RPD 130 N	2112	945	1624	1415	2210	2200	1190	1148	1063	1150			1145	600	3323	641	992	690	1386	696	650	DN200-P16	16	80
RPD 160 N									1130															

! Note: dimensions are guidelines only and referred to the U1/U2 version. Dimensions of models equipped with FX burner head depends on the installation requirements.

(1): optional switch cabinet mounted on other burner side
(2): other length on request
(3): measure may differ in case of special combustion head length (B1)
(4): with 3 mm sealing
(5): stud screw dimension
(6): stud screw length (with expansion sleeve 40mm)

GAS VALVE AND CONNECTION PIPE

PIC. 1A

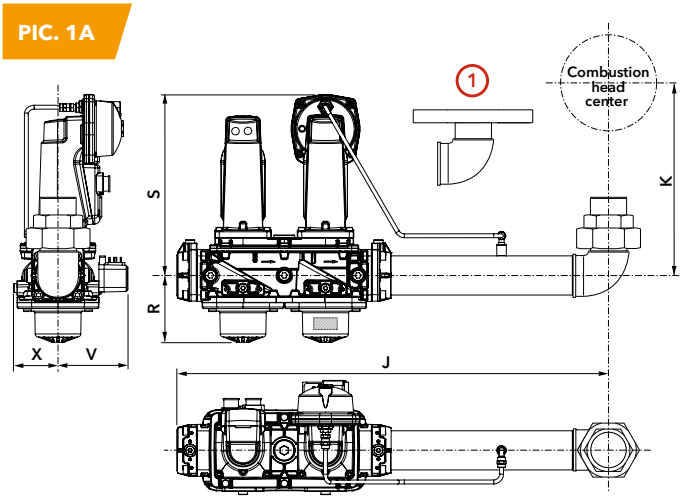

PIC. 1B

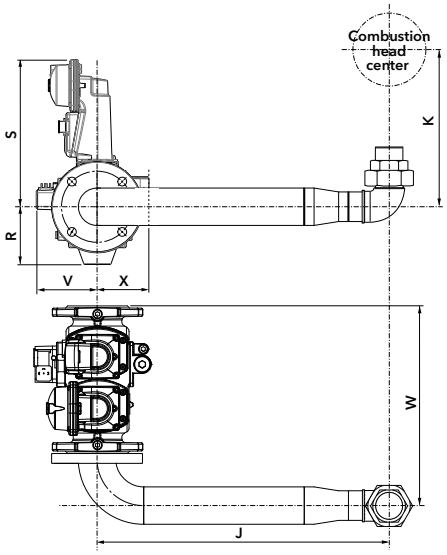

PIC. 1C

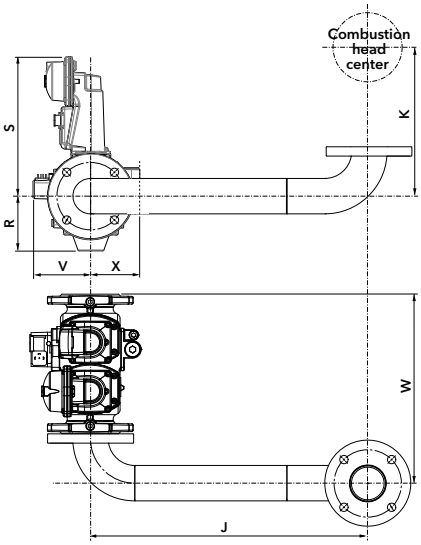

PIC. 2A

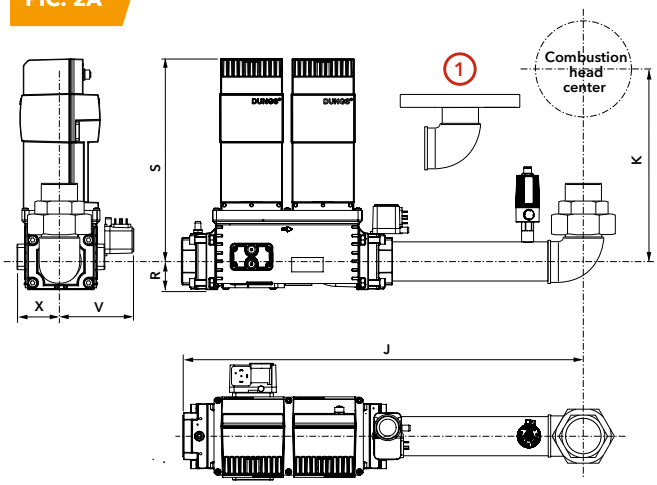

PIC. 2B

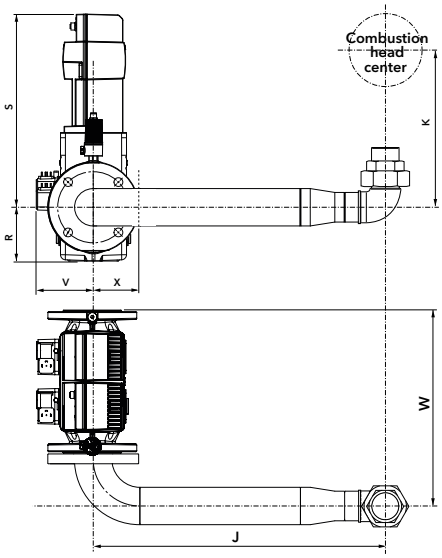

PIC. 2C

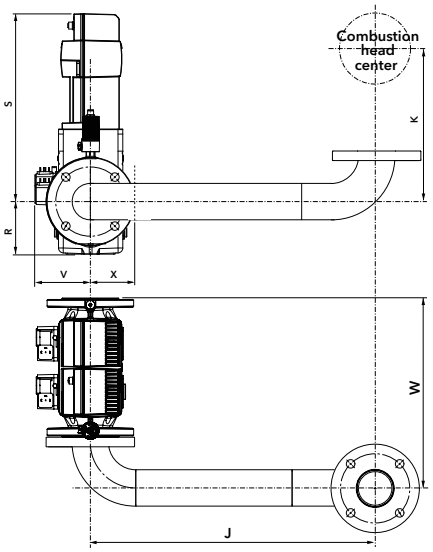

DIMENSIONS

Burner model	Gas valve model	Gas train code	Connection pipe code	Ø	Pic.	J	K	W	R	S	V	X
EK-TRON 5.300 G-E... EK-TRON 6.350 G-E...	VGD20.503	3148683	3144686	d2"	1A	650	355	-	103	279	108	68
	VGD40.065	3148684	3148771	DN65	1B	605	355	400	118	303	151	81
	VGD40.080	3148685	3148772	DN80	1B	605	355	440	132	313	148	88
	VGD40.100	3148686	3148773	DN100	1B	605	355	480	145	331	137	131
	MBE 050	3148693	3144686	d2"	2A	630	355	-	44	313	115	60
	MBE 065	3148694	3144686	DN65	2B	605	355	400	106	382	113	90
	MBE 080	3148695	3148772	DN80	2B	605	355	420	106	382	118	97
	MBE 100	3148696	3148773	DN100	2B	605	355	460	106	382	134	113
EK-TRON 6.400 G-E...	VGD20.503	3148683	3148770	s2"	1A①	650	370	-	103	279	108	68
	VGD40.065	3148684	3145997	DN65	1C	670	370	410	118	303	151	81
	VGD40.080	3148685	3145864	DN80	1C	670	370	435	132	313	148	88
	VGD40.100	3148686	3145821	DN100	1C	670	370	480	145	331	137	131
	MBE 050	3148693	3148770	d2"	2A①	630	355	-	44	313	115	60
	MBE 065	3148694	3145997	DN65	2C	670	370	415	106	382	113	90
	MBE 080	3148695	3145864	DN80	2C	670	370	435	106	382	118	97
	MBE 100	3148696	3145821	DN100	2C	670	370	475	106	382	134	113
EK-TRON 7.500 G-E... EK-TRON 7.600 G-E...	VGD20.503	3148683	3148770	s2"	1A①	650	370	-	103	279	108	68
	VGD40.065	3148684	3148766	DN65	1C	780	375	420	118	303	151	81
	VGD40.080	3148685	3148767	DN80	1C	780	375	435	132	313	148	88
	VGD40.100	3148686	3148768	DN100	1C	780	375	480	145	331	137	131
	VGD40.125	3148687	3148769	DN125	1C	790	375	565	175	345	159	137
	MBE 050	3148693	3148770	d2"	2A①	630	355	-	44	313	115	60
	MBE 065	3148694	3145997	DN65	2C	780	375	415	106	382	113	90
	MBE 080	3148695	3145864	DN80	2C	780	375	435	106	382	118	97
	MBE 100	3148696	3145821	DN100	2C	780	375	480	106	382	134	113
EK-TRON 5.300 G-R... EK-TRON 6.350 G-R...	VGD20.503	3148688	3144686	d2"	1A	650	355	-	103	279	108	68
	VGD40.065	3148689	3148771	DN65	1B	605	355	400	118	303	151	81
	VGD40.080	3148690	3148772	DN80	1B	605	355	440	132	313	148	88
	VGD40.100	3148691	3148773	DN100	1B	605	355	480	145	331	137	131
	MBE 050	3148697	3144686	d2"	2A	630	355	-	44	313	115	60
	MBE 065	3148698	3148771	DN65	2B	605	355	400	106	382	113	90
	MBE 080	3148699	3148772	DN80	2B	605	355	420	106	382	118	97
	MBE 100	3148700	3148773	DN100	2B	605	355	460	106	382	134	113
EK-TRON 6.400 G-R...	VGD20.503	3148688	3148770	s2"	1A①	650	370	-	103	279	108	68
	VGD40.065	3148689	3145997	DN65	1C	670	370	410	118	303	151	81
	VGD40.080	3148690	3145864	DN80	1C	670	370	435	132	313	148	88
	VGD40.100	3148691	3145821	DN100	1C	670	370	480	145	331	137	131
	MBE 050	3148697	3148770	d2"	2A①	630	355	-	44	313	115	60
	MBE 065	3148698	3145997	DN65	2C	670	370	415	106	382	113	90
	MBE 080	3148699	3145864	DN80	2C	670	370	435	106	382	118	97
	MBE 100	3148700	3145821	DN100	2C	670	370	475	106	382	134	113
EK-TRON 7.500 G-R... EK-TRON 7.600 G-R...	VGD20.503	3148688	3148770	s2"	1A①	650	370	-	103	279	108	68
	VGD40.065	3148689	3148766	DN65	1C	780	375	420	118	303	151	81
	VGD40.080	3148690	3148767	DN80	1C	780	375	435	132	313	148	88
	VGD40.100	3148691	3148768	DN100	1C	780	375	480	145	331	137	131
	VGD40.125	3148692	3148769	DN125	1C	790	375	565	175	345	159	137
	MBE 050	3148697	3148770	d2"	2A①	630	355	-	44	313	115	60
	MBE 065	3148698	3145997	DN65	2C	780	375	415	106	382	113	90
	MBE 080	3148699	3145864	DN80	2C	780	375	435	106	382	118	97
	MBE 100	3148700	3145821	DN100	2C	780	375	480	106	382	134	113

GAS VALVE AND CONNECTION PIPE

PIC. 1A

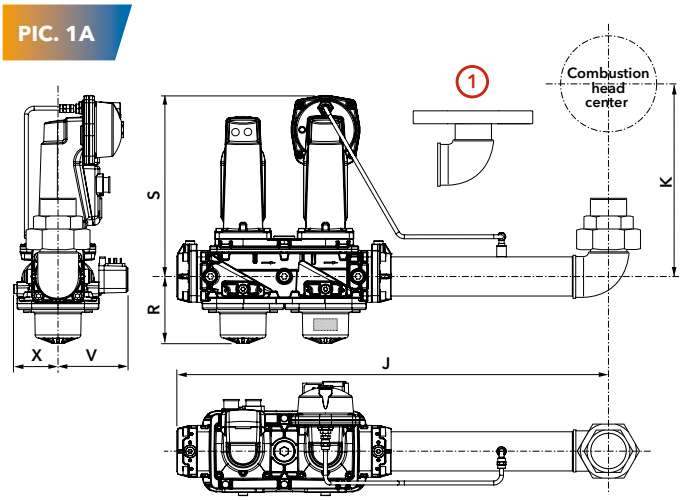

PIC. 1B

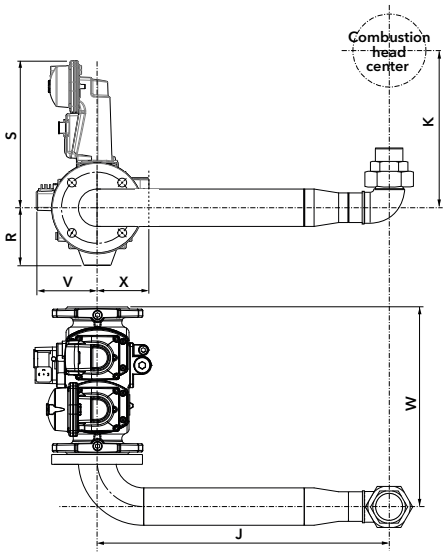

PIC. 1C

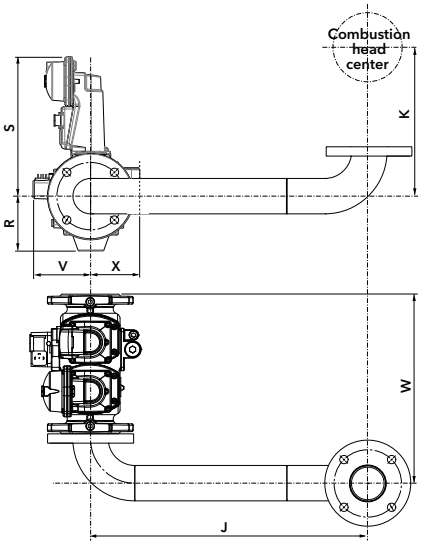

PIC. 2A

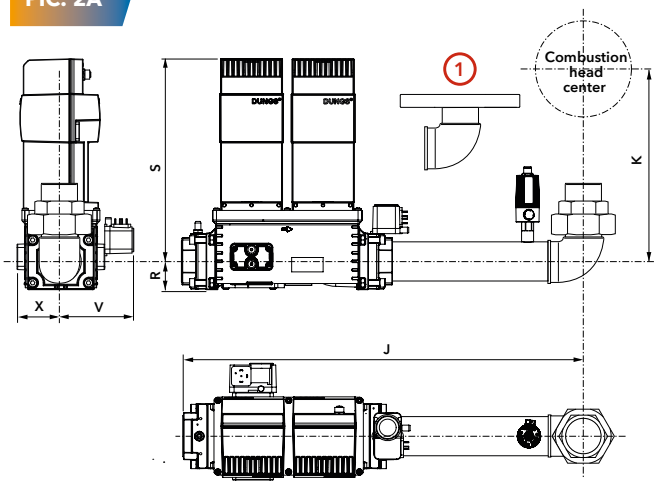

PIC. 2B

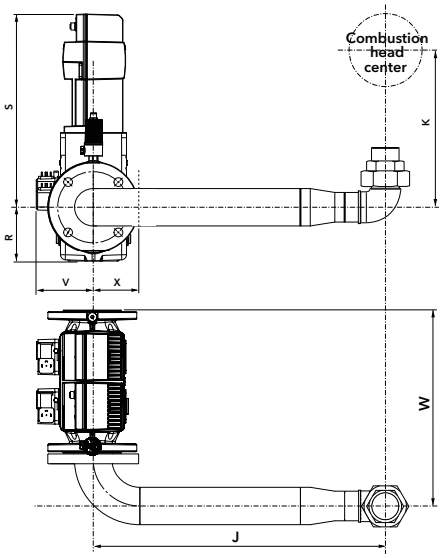

PIC. 2C

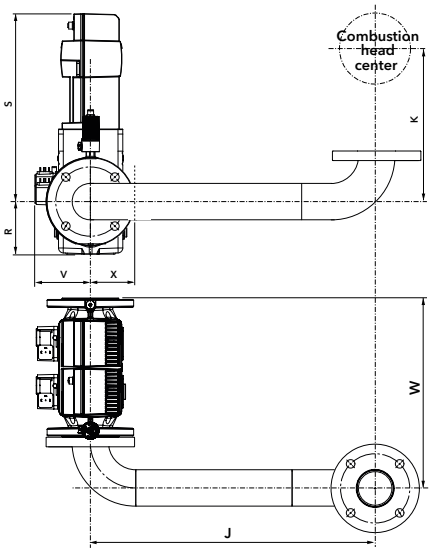

DIMENSIONS

Burner model	Gas valve model	Gas train code	Connection pipe code	Ø	Pic.	J	K	W	R	S	V	X
EK-TRON 5.170 GL-EX2	VGD20.503	3148683	3144686	d2"	1A	650	355	-	103	279	108	68
	VGD40.065	3148684	3148771	DN65	1B	605	355	400	118	303	151	81
	VGD40.080	3148685	3148772	DN80	1B	605	355	440	132	313	148	88
	MB-DLE 415	3149611	3144686	d1"1/2	2D	629	355		79	169	94	56
	MB-DLE 420	3149612	3144686	d2"	2D	629	355	-	76	220	94	56
EK-TRON 5.200 GL-EX2	VGD20.503	3148683	3144686	s2"	1A	650	355	-	103	279	108	68
	VGD40.065	3148684	3148771	DN65	1B	605	355	400	118	303	151	81
	VGD40.080	3148685	3148772	DN80	1B	605	355	440	132	313	148	88
	MB-DLE 420	3149612	3144686	d2"	2D	629	355	-	76	220	94	56
EK-TRON 6.350 GL-EX2	VGD20.503	3148683	3144686	s2"	1A	650	355	-	103	279	108	68
	VGD40.065	3148684	3148771	DN65	1B	605	355	400	118	303	151	81
	VGD40.080	3148685	3148772	DN80	1B	605	355	440	132	313	148	88
	VGD40.100	3148686	3148773	DN100	1B	605	355	480	145	331	137	131
	MBE 050	3148693	3144686	d2"	2A	630	355	-	44	313	115	60
	MBE 065	3148694	3148771	DN65	2B	605	355	400	106	382	113	90
	MBE 080	3148695	3148772	DN80	2B	605	355	420	106	382	118	97
	MBE 100	3148696	3148773	DN100	2B	605	355	460	106	382	134	113
EK-TRON 6.400 GL-EX2	VGD20.503	3148683	3148770	s2"	1A①	650	370	-	103	279	108	68
	VGD40.065	3148684	3148766	DN65	1C	670	370	410	118	303	151	81
	VGD40.080	3148685	3148767	DN80	1C	670	370	435	132	313	148	88
	VGD40.100	3148686	3148768	DN100	1C	670	370	480	145	331	137	131
	MBE 050	3148693	3148770	d2"	2A①	630	355	-	44	313	115	60
	MBE 065	3148694	3148766	DN65	2C	670	370	415	106	382	113	90
	MBE 080	3148695	3148767	DN80	2C	670	370	435	106	382	118	97
	MBE 100	3148696	3148768	DN100	2C	670	370	475	106	382	134	113

DUNGS

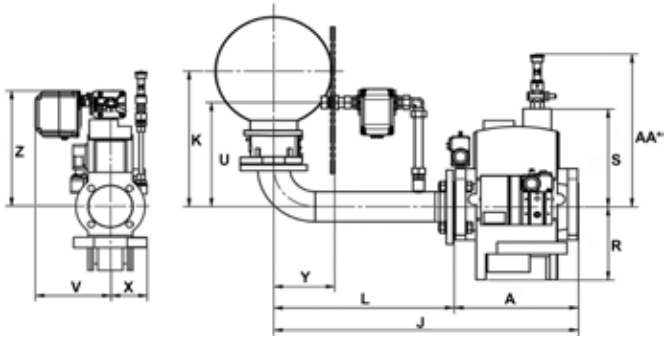

DUNGS basic gas trains delivery scope and description:
- gas compact unit MBC
- minimum gas pressure switch
- fittings between burner and gas train

Configuration with gas inlet from the right side (left side on request)

DUNGS gas trains		
Designation	**Type**	**Code**
GT-d706-1"1/2 (1)	Threaded design Basic version	3759629
GT-d705-2" (1)		3759628
GT-d701-65	Flanged design Basic version	3759625
GT-d702-80		3759626
GT-d703-100		3759627

Dimensions	V	X	Z	K	U	J	L	A	Y	R	S	AA(2)
GT-d706-1"1/2	210	57	351	404	311	683	500	203	169	80	185	316
GT-d705-2"	210	53	355	434	341	757	500	281	169	53	351	358
GT-d701-65	210	98	329	382	289	792,5	500	290	169	183	246	384
GT-d702-80	210	108	348	402	309	812	500	310	169	205	292	272
GT-d703-100	210	125	348	402	309	856	502	352	169	250	329	275

(1): model with integrated filter
(2): in PED configuration

SIEMENS

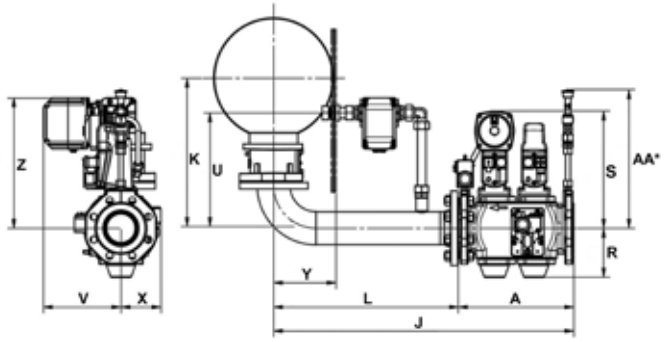

SIEMENS basic gas trains delivery scope and description:
- gas compact unit VGD20/40 including actuators SKP15 and SKP25
- minimum gas pressure switch
- fittings between burner and gas train

Configuration with gas inlet from the right side (left side on request)

SIEMENS gas trains		
Designation	**Type**	**Code**
GT-s706-1"1/2	Threaded design Basic version	3759285
GT-s705-2"		3759284
GT-s701-65	Flanged design Basic version	3759280
GT-s702-80		3759281
GT-s703-100		3759282
GT-s704-125		3759283

Dimensions	V	X	Z	K	U	J	L	A	Y	R	S	AA(2)
GT-s706-1"1/2	210	63	351	404	311	791	500	317	169	96	279	319
GT-s705-2"	210	63	355	434	341	803	500	325	169	103	279	321
GT-s701-65	210	106	329	382	289	792	500	290	169	118	303	363
GT-s702-80	210	108	348	402	309	812	500	310	169	132	313	371
GT-s703-100	210	124	348	402	309	854	502	350	169	145	331	381
GT-s704-125	210	138	348	402	309	904	502	400	169	175	349	396

(2): in PED configuration

Gas trains are fully mounted, electrical connected and tested (electrical, hydraulic, leakage)
Additional components (filter and other options) in order to comply to the local regulation and codes of practise must be ordered separately

FILTERS

Gas filter with flange PN 16, with non-ferrous metal, max. working pressure 2 bar

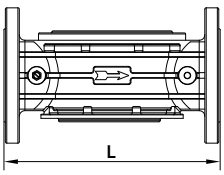

DN40	L = 160 mm	3757196
DN50	L = 160 mm	3757197
DN65	L = 290 mm	3757198
DN80	L = 310 mm	3757201
DN100	L = 350 mm	3757195
DN125	L = 480 mm	3757209
DN150	L = 480 mm	3757210

DUNGS

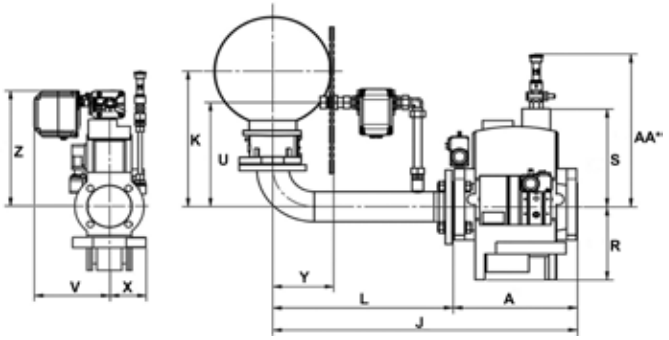

DUNGS basic gas trains delivery scope and description:
- gas compact unit MBC
- minimum gas pressure switch
- fittings between burner and gas train

Configuration with gas inlet from the right side (left side on request)

DUNGS gas trains		
Designation	**Type**	**Code**
GT-d901-65	Flanged design Basic version	**3759630**
GT-d902-80		**3759631**
GT-d903-100		**3759632**

Dimensions	V	X	Z	K		U		J	L	A	Y	R	S	AA(2)
				EK/N 8	EK/N 9	EK/N 8	EK/N 9							
GT-d901-65	210	98	447	514	539	406	388	893	600	291	237	183	246	384
GT-d902-80	210	108	447	514	539	406	388	912	600	310	237	205	292	272
GT-d903-100	210	125	447	514	539	406	388	954	600	352	237	250	329	275

(1): model with integrated filter
(2): in PED configuration

SIEMENS

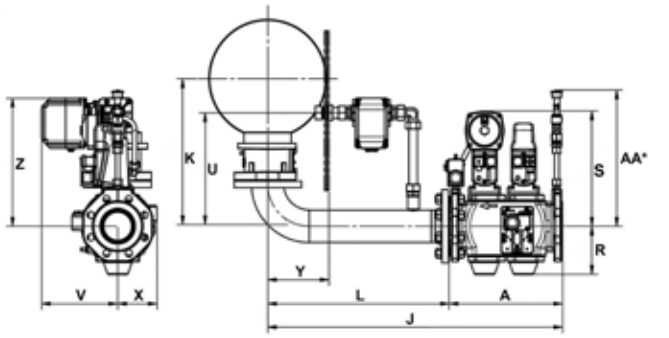

SIEMENS basic gas trains delivery scope and description:
- gas compact unit VGD20/40 including actuators SKP15 and SKP25
- minimum gas pressure switch
- fittings between burner and gas train

Configuration with gas inlet from the right side (left side on request)

SIEMENS gas trains		
Designation	**Type**	**Code**
GT-s901-65	Flanged design Basic version	**3759286**
GT-s902-80		**3759287**
GT-s903-100		**3759288**
GT-s904-125		**3759289**

Dimensions	V	X	Z	K		U		J	L	A	Y	R	S	AA(2)
				EK/N 8	EK/N 9	EK/N 8	EK/N 9							
GT-s901-65	210	106	447	514	539	406	388	892	600	290	237	118	303	363
GT-s902-80	210	108	447	514	539	406	388	912	600	310	237	132	313	371
GT-s903-100	210	124	447	514	539	406	388	952	600	350	237	145	331	381
GT-s904-125	210	138	447	514	539	406	388	1002	600	400	237	175	349	396

(2): in PED configuration

Gas trains are fully mounted, electrical connected and tested (electrical, hydraulic, leakage)
Additional components (filter and other options) in order to comply to the local regulation and codes of practise must be ordered separately

FILTERS

Gas filter with flange PN 16, with non-ferrous metal, max. working pressure 2 bar

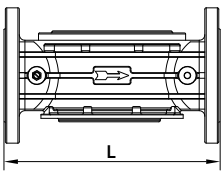

DN40	L = 160 mm	**3757196**
DN50	L = 160 mm	**3757197**
DN65	L = 290 mm	**3757198**
DN80	L = 310 mm	**3757201**
DN100	L = 350 mm	**3757195**
DN125	L = 480 mm	**3757209**
DN150	L = 480 mm	**3757210**

DUNGS

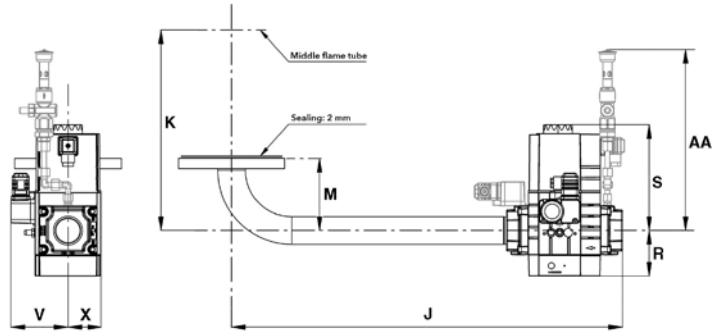

DUNGS basic gas trains delivery scope and description:
- gas compact unit MBC
- minimum gas pressure switch
- fittings between burner and gas train

Configuration with gas inlet from the right side (left side on request)

DUNGS gas trains		
Designation	**Type**	**Code**
GT-d452-1"1/2 (1)	Threaded design Basic version	3750510
GT-d453-2" (1)		3750511
GT-d454-65	Flanged design Basic version	3750512
GT-d455-80		3750513
GT-d456-100		3750514

Dimensions	V	X	K		M	J	R	S	AA(2)
			EK/N 6	EK/N 7					
d1"1/2-Rp1"1/2	99	57	373	404	126	683	80	186	358
d2"-Rp2"	123	81	403	434	156	757	96	328	384
d65-DN65	106	98	351	382	104	793	183	246	357
d80-DN80	113	108	371	402	124	812	205	292	380
d100-DN100	125	125	371	402	124	854	250	329	398

(1): model with integrated filter
(2): in PED configuration

SIEMENS

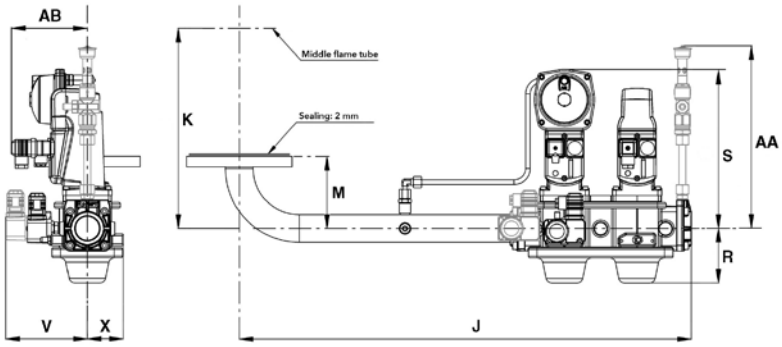

SIEMENS basic gas trains delivery scope and description:
- gas compact unit VGD20/40 including actuators SKP15 and SKP25
- minimum gas pressure switch
- fittings between burner and gas train

Configuration with gas inlet from the right side (left side on request)

SIEMENS gas trains		
Designation	**Type**	**Code**
GT-s451-1"1/2	Threaded design Basic version	3750525
GT-s452-2"		3750526
GT-s453-65	Flanged design Basic version	3750527
GT-s454-80		3750528
GT-s455-100		3750529
GT-s456-125		3750530

Dimensions	V	X	AB	K		M	J	R	S	AA(2)
				EK/N 6	EK/N 7					
s1"1/2-Rp1"1/2	105	68	125	373	404	126	800	103	279	320
s2"-Rp2"	105	68	125	403	434	156	800	103	279	325
s65-DN65	123	106	125	351	382	104	792	118	304	363
s80-dN80	125	108	125	371	402	124	812	132	314	371
s100-DN100	141	124	125	371	402	124	852	145	332	381
s125-DN125	155	138	125	371	402	124	902	175	350	396

(2): in PED configuration

Gas trains are fully mounted, electrical connected and tested (electrical, hydraulic, leakage)
Additional components (filter and other options) in order to comply to the local regulation and codes of practise must be ordered separately

FILTERS

Gas filter with flange PN 16, with non-ferrous metal, max. working pressure 2 bar

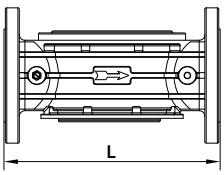

DN40	L = 160 mm	3757196
DN50	L = 160 mm	3757197
DN65	L = 290 mm	3757198
DN80	L = 310 mm	3757201
DN100	L = 350 mm	3757195
DN125	L = 480 mm	3757209
DN150	L = 480 mm	3757210

DUNGS

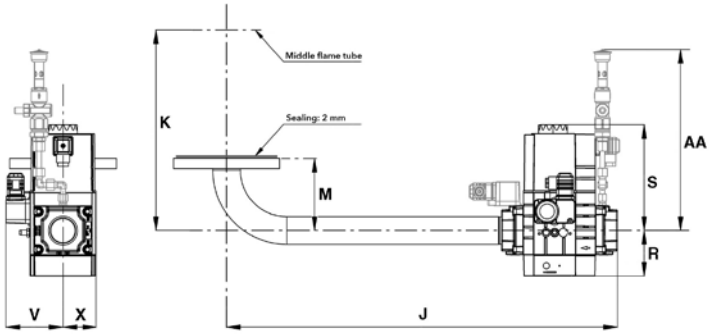

DUNGS basic gas trains delivery scope and description:

- gas compact unit MBC
- minimum gas pressure switch
- fittings between burner and gas train

Configuration with gas inlet from the right side (left side on request)

DUNGS gas trains		
Designation	**Type**	**Code**
GT-d457-2" (1)	Threaded design	**3750515**
GT-d458-65	Flanged design Basic version	**3750516**
GT-d459-80		**3750517**
GT-d460-100		**3750518**

Dimensions	V	X	K				M	J	R	S	AA(2)
			EK 8	EK 9	N8	N9					
d2"-Rp2"	123	81	514	539	598	623	205	657	96	328	384
d65-DN65	106	98	514	539	598	623	205	693	183	246	357
d80-DN80	113	108	514	539	598	623	205	712	205	292	380
d100-DN100	125	125	514	539	598	623	205	754	250	329	398

(1): model with integrated filter
(2): in PED configuration

SIEMENS

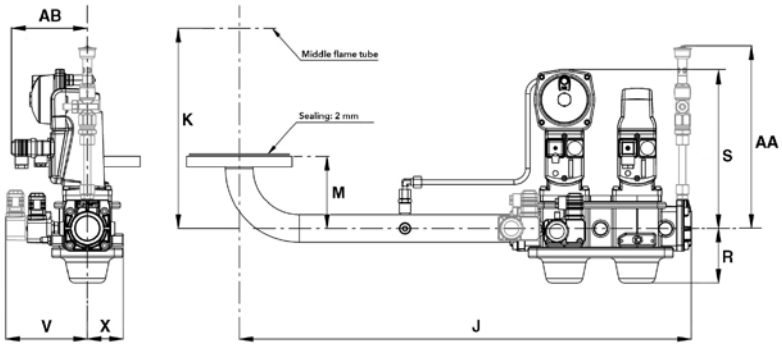

SIEMENS basic gas trains delivery scope and description:

- gas compact unit VGD20/40 including actuators SKP15 and SKP25
- minimum gas pressure switch
- fittings between burner and gas train

Configuration with gas inlet from the right side (left side on request)

SIEMENS gas trains		
Designation	**Type**	**Code**
GT-s457-2"	Threaded design	**3750537**
GT-s458-65	Flanged design Basic version	**3750538**
GT-s459-80		**3750539**
GT-s460-100		**3750540**
GT-s461-125		**3750541**

Dimensions	V	X	AB	K				M	J	R	S	AA(2)
				EK 8	EK 9	N8	N9					
s2"-Rp2"	105	68	125	514	539	598	623	205	701	103	279	325
s65-DN65	123	106	125	514	539	598	623	205	692	118	304	363
s80-dN80	125	108	125	514	539	598	623	205	712	132	314	371
s100-DN100	141	124	125	514	539	598	623	205	750	145	332	381
s125-DN125	155	138	125	514	539	598	623	205	800	175	350	396

(2): in PED configuration

Gas trains are fully mounted, electrical connected and tested (electrical, hydraulic, leakage)
Additional components (filter and other options) in order to comply to the local regulation and codes of practise must be ordered separately

FILTERS

Gas filter with flange PN 16, with non-ferrous metal, max. working pressure 2 bar

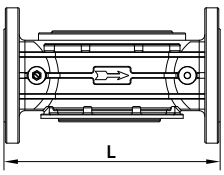

DN40	L = 160 mm	**3757196**
DN50	L = 160 mm	**3757197**
DN65	L = 290 mm	**3757198**
DN80	L = 310 mm	**3757201**
DN100	L = 350 mm	**3757195**
DN125	L = 480 mm	**3757209**
DN150	L = 480 mm	**3757210**

SIEMENS

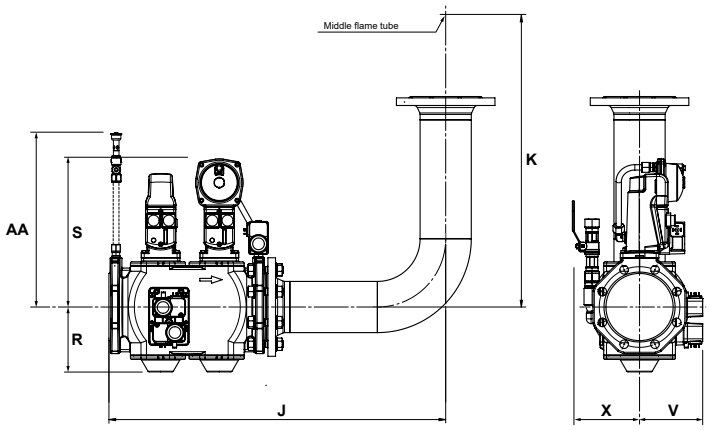

SIEMENS basic gas trains delivery scope and description:
- gas compact unit VGD40 including actuators SKP15 and SKP25
- minimum gas pressure switches
- fittings between burner and gas train

Configuration with gas inlet from the left side

SIEMENS gas trains		
Designation	**Type**	**Code**
s DN80-DN100	Basic configuration valve + connection pipe	**3757950**
s DN100-DN100		**3758623**
s DN125-DN100		**3760344**
s DN150-DN100		**3761042**

Dimensions	J	K	R	S	V	X	AA[1]
s80	710	912	132	312	125	108	372
s100	750	912	145	335	141	124	356
s125	800	912	175	348	155	138	392
s150	880	912	188	365	176	159	409

[1]: in PED configuration

Configuration with gas inlet from the right side

SIEMENS gas trains		
Designation	**Type**	**Code**
s DN80-DN100	Basic configuration valve + connection pipe	**3758624**
s DN100-DN100		**3757952**
s DN125-DN100		**3761040**
s DN150-DN100		**3761041**

Dimensions	J	K	R	S	V	X	AA[1]
s80	710	912	132	312	125	108	372
s100	750	912	145	335	141	124	356
s125	800	912	175	348	155	138	392
s150	880	912	188	365	176	159	409

[1]: in PED configuration

Gas trains are fully mounted, electrical connected and tested (electrical, hydraulic, leakage)
Additional components (filter and other options) in order to comply to the local regulation and codes of practise must be ordered separately

FILTERS

Gas filter with flange PN 16, with non-ferrous metal, max. working pressure 2 bar	DN80	L = 310 mm	**3757201**
	DN100	L = 350 mm	**3757195**
	DN125	L = 480 mm	**3757209**
	DN150	L = 480 mm	**3757210**

SIEMENS

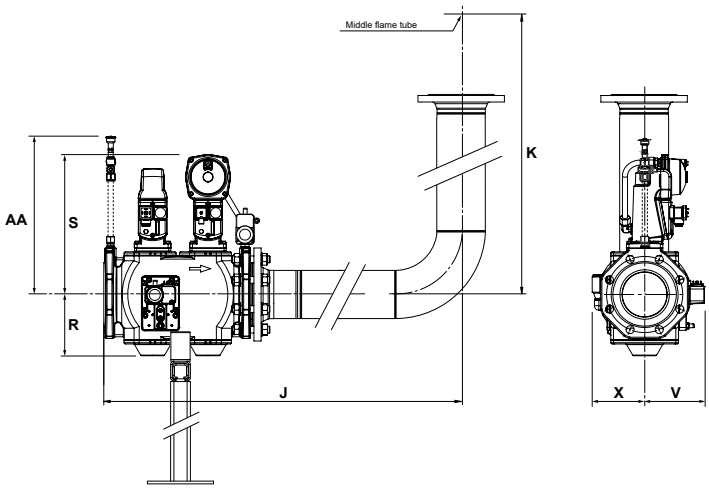

SIEMENS basic gas trains description:

- gas compact unit VGD40 including actuators SKP15 and SKP25
- minimum gas pressure switches
- fittings between burner and gas train
- an additional support for the gas train is required (code 3752216, see page 326)

Configuration with gas inlet from the left side

SIEMENS gas trains		
Designation	**Type**	**Code**
s100	Basic configuration valve + connection pipe	**3761110**
s125		**3761111**
s150		**3761112**

Dimensions	J	K	R	S	V	X	AA[1]
s100	1275	788	145	332	141	124	356
s125	1275	788	175	349	155	138	392
s150	1275	788	188	366	176	159	409

[1]: in PED configuration

Configuration with gas inlet from the right side

SIEMENS gas trains		
Designation	**Type**	**Code**
s100	Basic configuration valve + connection pipe	**3761107**
s125		**3761108**
s150		**3761109**

Dimensions	J	K	R	S	V	X	AA[1]
s100	1275	788	145	332	141	124	356
s125	1275	788	175	349	155	138	392
s150	1275	788	188	366	176	159	409

[1]: in PED configuration

Gas trains are fully mounted, electrical connected and tested (electrical, hydraulic, leakage)
Additional components (filter and other options) in order to comply to the local regulation and codes of practise must be ordered separately

FILTERS

Gas filter with flange PN 16, with non-ferrous metal, max. working pressure 2 bar	DN80	L = 310 mm	**3757201**
	DN100	L = 350 mm	**3757195**
	DN125	L = 480 mm	**3757209**
	DN150	L = 480 mm	**3757210**

SIEMENS

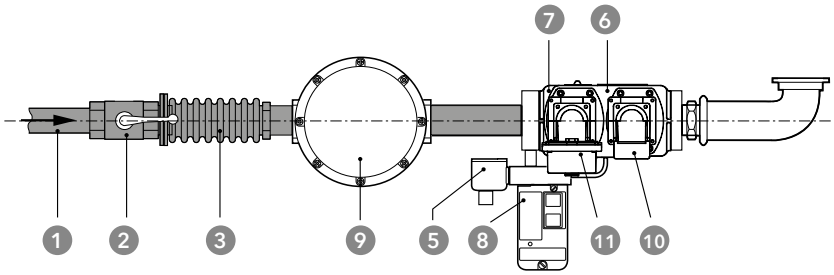

1. main gas pipe
2. ball valve*
3. anti-vibration coupling*
5. minimum gas pressure switch
6. safety gas valve
7. main gas valve
8. leakage control device*
9. gas filter* (governor included in the valve)
10. actuator SKP 15
11. actuator SKP 25

*: additional components to be ordered separately, e.g.: maximum gas pressure switch and other gas options in order to comply to the local regulation and codes of practise

Designation	Description	Code
GT-2"	VGD20.503	on request
GT-DN65	VGD40.065	on request
GT-DN80	VGD40.080	on request
GT-DN100	VGD40.100	on request
GT-DN125	VGD40.125	on request

GHO-TRON configuration:
gas ignition unit is included in the body of the burner, the price is included in the burner price.

i Gas trains are fully mounted, electrical connected and tested (electrical, hydraulic, leakage)
Additional components (filter and other options) in order to comply to the local regulation and codes of practise must be ordered separately

FILTERS

2"	on request
DN65 - 2"1/2	on request
DN80 - 3"	on request
DN100 - 4"	on request
DN125 - 5"	on request

GAS TRAIN CONNECTION PIPE

GTCP RP50 platform 2-3-4	GHO-TRON 2-3-4 with GT-2"	on request
GTCP reducer from DN80 to DN65 platform 2-3-4	GHO-TRON 2-3-4 with GT-DN65	on request
GTCP reducer from DN100 to DN80 platform 4-5	GHO-TRON 4-5 with GT-DN100	on request
GTCP reducer from DN125 to DN80 platform 5	GHO-TRON 5 with GT-DN125	on request

CONTROL UNITS BT320, BT330, BT340

The device is composed of a control box for safety and for programming the parameters of mono- and dual fuel burners with intermittent or continuous operation through a step by step servomotor up to 10 Nm.
The BT300 combines the benefits of an electronic fuel-air ratio control system with up to three motorised actuating devices and an optional modules like an analogue output for speed control of the combustion air fan with an electronic burner control unit.

The device is equippable with the following modules:
- fan speed regulation;
- burner power regulation;
- control of combustion air excess;
- CO control (through simple or combined probe);
- communication via Bus system.

The BT300 is available in three designs with the following specific functions:
- **BT320** for single fuel burner and intermittent operation, with an output 0...10 V, 0/4...20 mA and the management of two servomotors;
- **BT330** for single fuel burner and continuous operation, using suitable flame detectors, with an output 0...10 V, 0/4...20 mA and the management of three servomotors;
- **BT340** for dual fuel burner and continuous operation, using suitable flame detectors, with an output 0...10 V, 0/4...20 mA and the management of three servomotors.

Main characteristics of the control box:
- power supply: 230 V -15…+10%, 50 Hz;
- servomotors from 1,2 to 10 Nm.

COMMUNICATION MODULE

BT300 module for electronic burners mounted in the switch cabinet of the burner (Note: one LCM module is required)	ModBus/BT3	**3754081**
	ProfiBus/BT3	**3750142**
	Ethernet/BT3	**on request**

LCM MODULE

Module required for O_2 control, Variatron and communication buses connections	**3752286**

Note: only one LCM module is necessary for these 3 options; the module is already included on dual fuel burners

REMOTE SOFTWARE

Kit to connect a PC laptop to the BT300 for its parametrization	LSA100 + USB/CAN + CD-Rom	**3751130**

CONTROL UNITS ETAMATIC AND ETAMATIC OEM

The Etamatic control units are available on request according to the configuration of the burner selected.

Electronic control **Etamatic** with 4 DPS-adjusting outputs for servodrives up to 50 mA of direct current with:
- incorporated tightness control of the valves;
- incorporated regulator of power;
- incorporated counter of working hours with pulse transducer;
- incorporated relay of flame;
- incorporated program of O_2 regulation, including the Lamtec system with connecting bus.

Electronic control **Etamatic S** with a steady adjusting output for the regulation of the number of revolutions of the fan supplying the air of nurning and 4 DPS-adjusting outputs for the servodrives up to 50 mA of direct current with:
- incorporated tightness control of the valves;
- incorporated regulator of power;
- incorporated counter of working hours with pulse transducer;
- incorporated relay of flame;
- incorporated program of O_2 regulation, including the Lamtec system with connecting bus.

For the control of the number of revolutions it is required additionally:
- Static frequency converter;
- Switch Namur.

INTERFACE MODULES FOR ETAMATIC AND ETAMATIC OEM

Profibus module for ETA+OEM with 2 m cable	**3752995**
Modbus module RTU RS232 for ETA+OEM with 2m cable	**3752467**
Modbus module RTU RS422/484 for ETA+OEM with 2m cable	**3756474**
Ethernet module TCP/IP for ETA+OEM with 2m cable	**3757955**

ACCESSORIES FOR ETAMATIC OEM

Software for remote PC connection for Lamtec ETAMATIC OEM with all its accessories for the connection (available languages: English, German and French)	**3753366**
Customer interface (DISPLAY) for ETAMATIC OEM	**3751683**
Hand held programming unit for ETAMATIC OEM (languages: German and English) – Alternative to software 3753366 when PC is not available	**1718850339**
Hand held programming unit for ETAMATIC OEM (language: Russian) – Alternative to software 3753366 when PC is not available	**3754519**

Note: either customer interface or operation and display unit has to be included

O_2 TRIM FOR BT300, ETAMATIC AND ETAMATIC OEM, FMS/VMS

This kit is used to optimize the combustion in order to keep the air excess as much stable as possible irrespective of the changes that can occur during operations, for instance slight calorific value variations, combustion air temperature and pressure. This improves the seasonal efficiency and therefore reduces the fuel consumption.

The kit includes the following components:
- Lambda transmitter LT3
- Lambda probe LS2
- Probe installation fitting (PIF)
- Gas extraction device (GED)

The control unit has to be installed close to the probe (max 10 m of cable).
The probe needs a calibration but no reference gas is necessary.
The display shows the O_2 content.
Maximum distance between the LT3 and the burner control panel is 500 m.

	Additional LSB modules installed at LT3	GED length	Code
Kit for O_2 trim (LT3 + LS2) **Flue temp max 300 °C – Display for O_2 visualization** (Note: for models equipped with BT3 this kit needs a LCM module installed in the burner control panel)	none	150 mm	**3759296**
		300 mm	**3759297**
		450 mm	**3759298**
	4x 0/4-20 mA output	150 mm	**3759299**
		300 mm	**3759300**
		450 mm	**3759301**
	4x 0/4-20 mA output + 4x digital output	150 mm	**3759302**
		300 mm	**3759303**
		450 mm	**3759304**

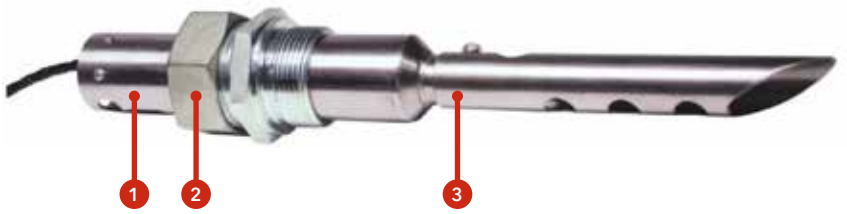

1. Lambda Probe LS2 in standard housing up to 300°C (572°F); default cable length is 2 m (6.5 ft), FEP, with connecting plug
2. Probe installation fitting (PIF)
3. Gas extraction device (GED)

The LS2 lambda probe is equipped with a 2 meter long connection cable that connects the sensor to the transmitter (LT3). It is possible to extend the connection up to a maximum distance of 10 meters (for greater lengths the conformity expires) with a ready-made cable and a probe connection box (PCB).

Description		Code
Extension for LS2	5m ready-made cable	**3759318**
	PCB (probe connection box)*	**3759319**

The PCB is a small terminal box that is connected to the 2 meter long cable already existing on the probe. The wiring between the PCB and the transmitter must be carried out on the construction site with suitable cables and trained personnel.

*: the PCB is mandatory if the end user chooses to use his own connecting cable and not one of those proposed (max total length remains 10m)

O_2/CO_e TRIM FOR BT300, ETAMATIC AND ETAMATIC OEM, FMS/VMS

This kit is used for optimizing the combustion in order to keep the air excess as low as possible in order to maximize the seasonal efficiency and therefore minimize the fuel consumption.
In addition to the features of the O_2 trim only, this kit reduces the air excess to its minimum because this system continuously measures the content of unburned fuel (CO_e) in the flue: should the air excess be reduced too much, the CO_e raises and the system reacts by increasing the air excess in order to keep firing in safe conditions.

The kit includes the following components:
- Lambda transmitter LT3-F
- Lambda probe KS1D
- Probe installation fitting (PIF)
- Gas extraction device (GED)

The control unit has to be installed close to the probe (max 10 m of cable).
The probe needs a calibration but no reference gas is necessary.
The display shows the O_2 and CO_e content.
Maximum distance between the LT3-F and the burner control panel is 500 m.

Note: this system is not suitable for GL-EUF and L-EUF burners

	Additional LSB modules installed at LT3-F	GED length	Code
Kit for O_2 trim and CO control (LT3-F + KS1D) **Flue temp max 300 °C** (Note: for models equipped with BT3 this kit needs a LCM module installed in the burner control panel)	none	150 mm	**3759305**
		300 mm	**3759306**
		450 mm	**3759307**
	4x 0/4-20 mA output	150 mm	**3759308**
		300 mm	**3759309**
		450 mm	**3759310**
	4x 0/4-20 mA output + 4x digital output	150 mm	**3759311**
		300 mm	**3759312**
		450 mm	**3759313**

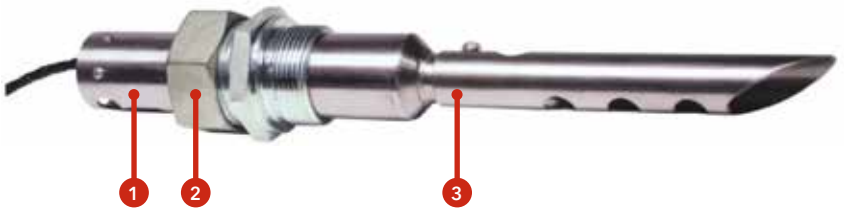

1. Lambda Probe KS1D in standard housing up to 300°C (572°F); default cable length is 2 m (6.5 ft), FEP, with connecting plug
2. Probe installation fitting (PIF)
3. Gas extraction device (GED)

The KS1D lambda probe is equipped with a 2 meter long connection cable that connects the sensor to the transmitter (LT3-F). It is possible to extend the connection up to a maximum distance of 10 meters (for greater lengths the conformity expires) with a ready-made cable and a probe connection box (PCB).

Description		Code
Extension for KS1D	5m ready-made cable	**3759318**
	PCB (probe connection box)*	**3759319**

The PCB is a small terminal box that is connected to the 2 meter long cable already existing on the probe. The wiring between the PCB and the transmitter must be carried out on the construction site with suitable cables and trained personnel.

*: the PCB is mandatory if the end user chooses to use his own connecting cable and not one of those proposed (max total length remains 10m)

SPARE PARTS FOR O_2 AND O_2/CO TRIM

Lambda transmitter LT3	Additional LSB modules installed:	none	**4396180***
		4x 0/4-20 mA output	**65314636**
		4x 0/4-20 mA output + 4x digital output	**65314637**

Lambda transmitter LT3-F	Additional LSB modules installed:	none	**65314641**
		4x 0/4-20 mA output	**65314638**
		4x 0/4-20 mA output + 4x digital output	**65314639**

LSB modules	4x 0/4-20 mA output	**65314642**
	4x digital output	**65314643**

Lambda probes	Lambda probe LS2	**4396179***
	Lambda probe KS1D	**65314645**

Probe installation fitting (PIF)	**65314646**

Gas extraction device (GED)	GED length 150mm	**65314647**
	GED length 300mm	**65314648**
	GED length 450mm	**65314649**

Wiring adapters*	Adapter 655R1027, to adapt a new LS2 with 5-pin round plug to an old LT2/LT3 version with automotive plug	**6500790800**
	Adapter 655R1028, to adapt an old LS2 version with automotive plug to a new LT3 version with 5-pin round plug	**6500791100**

*: As of July 2024, the LS2 probe is shipped with a new 5-pin plug, replacing the previous configuration with dual auto plugs. Consequently, the LT3 transmitter has a new plug socket.

For **new installations** refer to the codes with the new configuration at page 317.

In case of an **existing system**:

- to connect a new LS2 probe (code 4396179) to an existing probe connection box, it is necessary to add the adapter 655R1027 (code 6500790800);

- in order to connect the old LS2 probe to a new LT3 transmitter (code 4396180), it is necessary to add the adapter 655R1028 (code 6500791100)

FREQUENCY CONVERTER ABB FOR EXTERNAL INSTALLATION

IP21 with: • EMC filter • Inductor • Control panel	3 kW	**3757054**
	4 kW	**3757055**
	5,5 kW	**3757056**
	7,5 kW	**3757057**
	11 kW	**3757058**
	15 kW	**3757059**
	18,5 kW	**3757060**
	22 kW	**3757061**
	30 kW	**3757062**
	37 kW	**3757063**
	45 kW	**3757064**
	55 kW	**3757065**
	75 kW	**3757066**
IP55 with: • EMC filter • Inductor • Control panel	3 kW	**3757067**
	4 kW	**3757068**
	5,5 kW	**3757069**
	7,5 kW	**3757070**
	11 kW	**3757071**
	15 kW	**3757072**
	18,5 kW	**3757073**
	22 kW	**3757074**
	30 kW	**3757075**
	37 kW	**3757076**
	45 kW	**4396082**
	55 kW	**3757078**
	75 kW	**3757079**

ACOUSTIC SHROUDS FOR EK EVO AND N10

Product description:
- sound level reduction (sound pressure level): ca. 20 ... 30 dB(A)
- sheet metal casing, structured coating, isolation with temperature resistant mineral wool
- noise absorption material acc. DIN 4102, covered with a glass fibre layer, covered with perforated sheet metal, galvanised
- easily disassembled into elements: base plate, side covers, top cover, air inlet section
- all elements easily connected via quick locks
- height of noise reduction casing adjustable on wheels
- feed through for gas-, oil- and electrical connections integrated in side covers following the requirements
- air inlet via noise reduction line
- if required, an oil recuperation tub can be integrated on the base plate
- for some boiler types a supporting frame for the casing may be necessary, due to the height of the burner tube over the floor

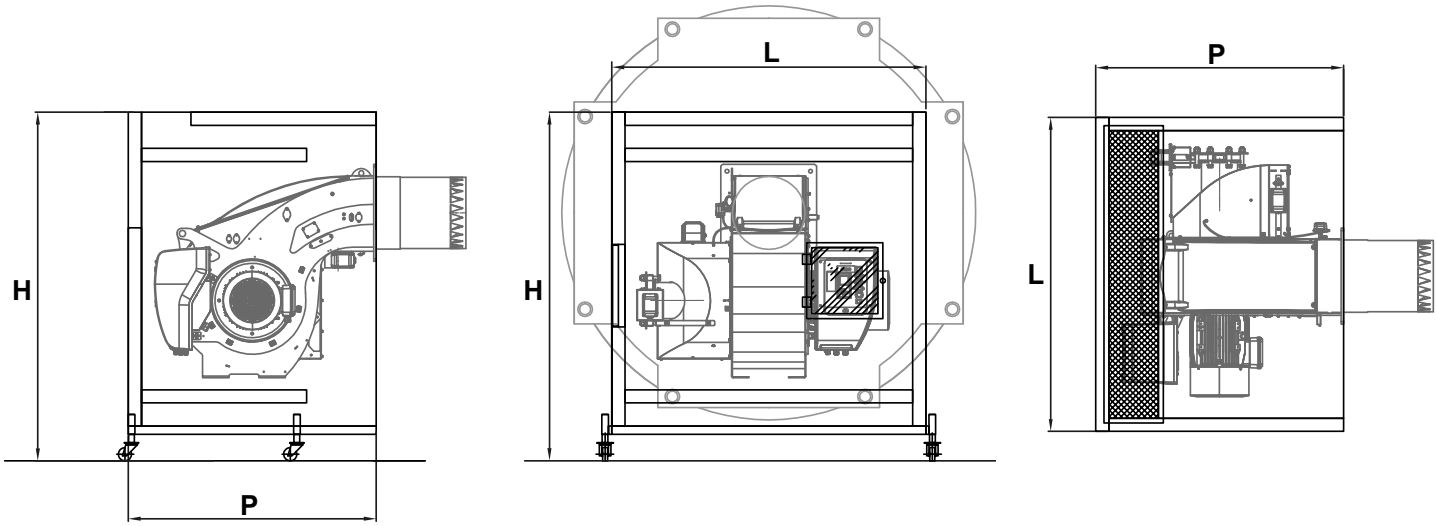

! Drawings and dimensions are shown for informational purposes and may vary depending on technical requirements.

MODELS FOR EK EVO

Designation	L (mm)	P (mm)	H (mm)	Weigth (kg)	Code
EKEVO 6.2400/2900 G-...	1450	1350	1200	200	on request
EKEVO 7.3600/4500 G-...	1550	1400	1300	246	on request
EKEVO 7.5800/7700 G-...	1570	1850	1300	246	on request
EKEVO 8.5800/7100 G-...	1760	1630	1580	325	on request
EKEVO 9.8700/10400 G-...	1750	1630	1750	368	on request
EKEVO 9.13000 G-...	1850	1750	1750	396	on request
EKEVO 6.2400/2900 GL-.../L-...	1450	1350	1200	200	on request
EKEVO 7.3600/4500 GL-.../L-...	1550	1400	1300	246	on request
EKEVO 8.5800/7100 GL-.../L-...	1760	1630	1580	335	on request
EKEVO 9.6500...10400 GL-.../L-...	1760	1630	1750	378	on request

MODELS FOR N10

Designation	L (mm)	P (mm)	H (mm)	Weigth (kg)	Code
N10 G-...	1900	1780	1900	478	on request
N10 GL-...	1900	1780	1900	488	on request
N10 L-...	1900	1780	1900	488	on request

NOTE: Before submitting your order please provide information on the boiler model and the type of installation: floor standing boiler or boiler mounted on a base.

BALL VALVE

Female threaded ball valve, max. working gas pressure: 1 bar	FRp1/2"	3751028
	FRp3/4"	3751029
	FRp1"	3751030
	FRp1"1/2	3751031
	FRp2"	3751032
Flanged ball valve, max. working gas pressure: 16 bar	DN40	3751033
	DN50	3751034
	DN65	3751035
	DN80	3751036
	DN100	3751037
	DN125r	3751038
	DN150	3751039

ANTI-VIBRATION COUPLING (COMPENSATOR)

Male-threaded anti-vibration coupling	MRp1"	3751018
	MRp1"1/2	3751019
	MRp2"	3751020
Flanged anti-vibration coupling, max. working gas pressure: 10 bar	DN40	3751021
	DN50	3751022
	DN65	3751023
	DN80	3751024
	DN100	3751025
	DN125	3751026
	DN150	3751027

GAS FILTER

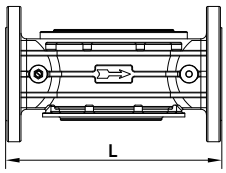

Filter with non-ferrous metal, max. working pressure: 2 bar	Rp1"1/2	L = 160 mm	3757199
	Rp2"	L = 160 mm	3757200
Filter with flange PN16, non-ferrous metal, max. working pressure: 2 bar	DN40	L = 230 mm	3757196
	DN50	L = 230 mm	3757197
	DN65	L = 290 mm	3757198
	DN80	L = 310 mm	3757201
	DN100	L = 350 mm	3757195
	DN125	L = 480 mm	3757209
	DN150	L = 480 mm	3757210
Filter with flange PN16, non-ferrous metal, max. working pressure: 6 bar	DN40	L = 230 mm	3757205
	DN50	L = 230 mm	3757206
	DN65	L = 290 mm	3757207
	DN80	L = 310 mm	3757208
	DN100	L = 350 mm	3757202
	DN125	L = 480 mm	3757203
	DN150	L = 480 mm	3757204

PRESSURE REGULATOR

Gas pressure regulator GDJ **Max. working pressure 0,4 bar, non-ferrous metal** 	GDJ Rp1/2" x 100 mm	with spring 16 ... 28 mbar	**3333123399**
		spring for 10 … 20 mbar	**1478682742**
		spring for 22 … 40 mbar	**1478781122**
		spring for 40 … 55 mbar	**12001218**
	GDJ Rp3/4" x 125 mm	with spring 12,5 … 25 mbar	**3333123400**
		spring for 22,5 … 35 mbar	**3753834**
		spring for 30 … 50 mbar	**3753835**
	GDJ Rp1" x 125 mm	with spring 12,5 … 25 mbar	**3333123401**
		spring for 22,5 … 35 mbar	**3753834**
		spring for 30 … 50 mbar	**3753835**
	GDJ Rp1"1/2 x 155 mm	with spring 12,5 … 25 mbar	**3333123402**
		spring for 22,5 … 35 mbar	**3753840**
		spring for 30 … 50 mbar	**3753841**
	GDJ Rp2" x 200 mm	with spring 12,5 … 25 mbar	**3333123403**
		spring for 22,5 … 35 mbar	**3753847**
		spring for 30 … 50 mbar	**3753848**
Gas pressure regulator FRS **Max. working pressure 0,4 bar, non-ferrous metal** 	FRS s40-DN40 x 200 mm	with spring 10 … 30 mbar	**1478490702**
		red spring for 25 … 55 mbar	**1478435327**
		yellow spring for 30 … 70 mbar	**1478435338**
		black spring for 60 … 110 mbar	**1478435349**
	FRS s50-DN50 x 230 mm	with spring 10 … 30 mbar	**1478490713**
		red spring for 25 … 55 mbar	**1478435372**
		yellow spring for 30 … 70 mbar	**1478435383**
		black spring for 60 … 110 mbar	**1478435394**
	FRS s65-DN65 x 290 mm	with spring 10 … 30 mbar	**1478490724**
		red spring for 25 … 55 mbar	**1478435429**
		yellow spring for 30 … 70 mbar	**1478435430**
		black spring for 60 … 110 mbar	**1478435441**
		pink spring for 100 ... 150 mbar	**1478494328**
	FRS s80-DN80 x 310 mm	with spring 10 … 30 mbar	**3750211**
		red spring for 25 … 55 mbar	**1478435429**
		yellow spring for 30 … 70 mbar	**1478435430**
		black spring for 60 … 110 mbar	**1478435441**
		pink spring for 100 ... 150 mbar	**1478494328**
	FRS s100-DN100 x 350 mm	with spring 10 … 30 mbar	**12001097**
		red spring for 25 … 55 mbar	**1478435474**
		yellow spring for 30 … 70 mbar	**1478435485**
		black spring for 60 … 110 mbar	**1478435496**
		pink spring for 100 ... 150 mbar	**1478781519**
	FRS s125-DN125 x 400 mm	with spring 10 … 30 mbar	**12001098**
		red spring for 25 … 55 mbar	**1478434982**
		yellow spring for 30 … 70 mbar	**1478434993**
		black spring for 60 … 110 mbar	**1478435009**
		pink spring for 100 ... 150 mbar	**1478740474**
	FRS s150-DN150 x 480 mm	with spring 10 … 30 mbar	**12001099**
		red spring for 25 … 55 mbar	**1478435032**
		yellow spring for 30 … 70 mbar	**1478435043**
		black spring for 60 … 110 mbar	**1478435054**
		pink spring for 100 ... 150 mbar	**1478781484**

PRESSURE REGULATOR

Gas pressure regulator RS 250	with safety valve and flange PN16, max. working pressure 6 bar	RS250 DN25 x 230 mm	**1478541586**
		RS250 DN50 x 230 mm	**1478541597**
		RS250 DN80 x 310 mm	**1478541600**
		RS250 DN100 x 350 mm	**1478541611**
		RS250 DN150 x 480 mm	**1478541622**
Gas pressure regulator RS 251	with safety valve and flange PN16, max. working pressure 4 bar	RS251 DN50 x 310 mm	**1478548747**
		RS251 DN80 x 410 mm	**1478548758**
Safety blow-off valve S10 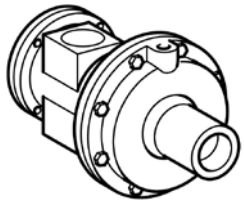	with internal thread Rp1", max. working pressure 1 bar	discharge pressure 80 mbar	**1478687054**
		discharge pressure 100 mbar	**1478687065**
		discharge pressure 120 mbar	**1478687076**
		discharge pressure 140 mbar	**1478687087**
		discharge pressure 160 mbar	**1478687098**
		discharge pressure 180 mbar	**1478687101**
		discharge pressure 200 mbar	**1478687112**
		discharge pressure 220 mbar	**1478687123**
		discharge pressure 240 mbar	**1478687134**
		discharge pressure 260 mbar	**1478687145**
		discharge pressure 280 mbar	**1478687156**
		discharge pressure 300 mbar	**1478687167**

GAS PRESSURE SWITCH

	For installation on double electromagnetic valves, max. working pressure 0,5 bar	GW50A5	**3751554**
		GW150A5	**3751555**
		GW500A5	**3752190**
	For installation on electromagnetic/motorized valves, max. working pressure 0,5 bar	GW50A6	**3752189**
		GW150A6	**3751556**
		GW500A6	**3751557**

MANOMETER

	Gas manometers with push-button valve, Rp1/2"	0 – 60 mbar	**3751627**
		0 – 100 mbar	**3751546**
		0 – 160 mbar	**3751550**
		0 – 250 mbar	**3751551**
		0 – 600 mbar	**3751552**
		0 – 1,6 bar	**3751545**
		0 – 6 bar	**3751544**

TEST BURNER

Test burner with push-button valve, Rp1/2"	max pressure 0,5 bar	**3751553**

INSERT RING

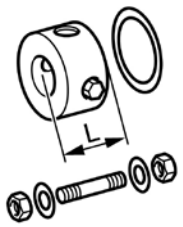

Insert ring with connections Rp1/2" and Rp3/4" for manometer and test burner	DN40	L = 50 mm	**3752194**
	DN50	L = 50 mm	**3752195**
	DN65	L = 50 mm	**3752196**
	DN80	L = 50 mm	**3752197**
	DN100	L = 50 mm	**3752198**
	DN125	L = 50 mm	**3752199**
	DN150	L = 50 mm	**3752200**

GAS FLOW METERS

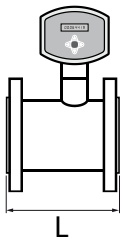

TME 400-VM without 4-20mA output	DN50 – PN10	100 m³/h	L = 150 mm	**3757525**
	DN80 – PN10	400 m³/h	L = 120 mm	**3757527**
	DN100 – PN10	650 m³/h	L = 150 mm	**3757529**
	DN150 – PN10	1000 m³/h	L = 175 mm	**3757530**
	DN150 – PN10	1600 m³/h	L = 175 mm	**3757531**
TME 400-VM-A with 4-20mA output	DN50 – PN10	100 m³/h	L = 150 mm	**3757534**
	DN80 – PN10	400 m³/h	L = 120 mm	**3757536**
	DN100 – PN10	650 m³/h	L = 150 mm	**3757538**
	DN150 – PN10	1000 m³/h	L = 175 mm	**3757539**
	DN150 – PN10	1600 m³/h	L = 175 mm	**3757540**
TME 400 reversion kit power module				**3759090**
Transmitter power supply KFD2-STC5-1				**3758822**

FLEXIBLE HOSE

Stainless steel, max pressure 4 bar	Rp1/2"	L = 500 mm	**4488681772**
	Rp1/2"	L = 1000 mm	**4488681783**
	Rp3/4"	L = 500 mm	**4488681794**
	Rp3/4"	L = 1000 mm	**4488682708**
	Rp1"	L = 500 mm	**4488682719**
	Rp1"	L = 1000 mm	**4488682720**
Stainless steel, max pressure 1 bar	Rp3/8"-Rp1/2"	L = 500 mm	**4488696511**
	Rp3/8"-Rp1/2"	L = 1000 mm	**4488696522**
	d2"-Rp2"	L = 500 mm	**4488696533**
	d2"-Rp2"	L = 1000 mm	**4488696544**

HOLDER

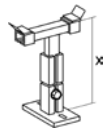	**Holder for gas train**	For gas train DN40...DN150 Support height: x = 545…935 mm	**3752216**

FLANGES

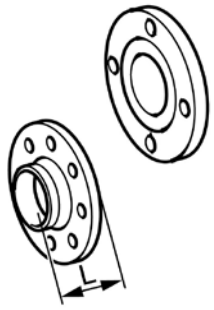	**Threaded flange PN16**	Rp3/4"	**3333109195**
		1"	**3333109196**
		Rp1"1/2	**3333109197**
		Rp2"	**3333109198**
	Welded flange PN16	DN40 x 42 mm	**5318353048**
		DN50 x 45 mm	**5318428082**
		DN65 x 45 mm	**5318428093**
		DN80 x 50 mm	**5318428106**
		DN100 x 52 mm	**5318428117**
		DN125 x 55 mm	**5318428128**
		DN150 x 55 mm	**5318428139**

STRAIGHT PIPE

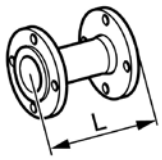	**Flanged, PN16**	DN40 x 500 mm	**3752235**
		DN50 x 250 mm	**3752236**
		DN50 x 500 mm	**3752237**
		DN65 x 250 mm	**3752238**
		DN65 x 500 mm	**3752239**
		DN80 x 250 mm	**13019834**
		DN80 x 500 mm	**1688421230**
		DN100 x 250 mm	**3752240**
		DN100 x 500 mm	**1688421252**
		DN125 x 250 mm	**1688421525**
		DN125 x 500 mm	**1688421274**
		DN150 x 250 mm	**1688421536**
		DN150 x 500 mm	**1688421296**
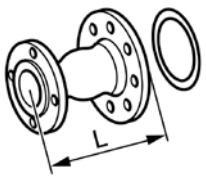	**Adapting, flanged PN16**	DN25 – DN40 x 144 mm	**1688541804**
		DN25 – DN50 x 159 mm	**1688586714**
		DN25 – DN65 x 173 mm	**1688590469**
		DN25 – DN80 x 254 mm	**1688653209**
		DN40 – DN50 x 163 mm	**3752223**
		DN40 – DN65 x 177 mm	**3752224**
		DN40 – DN80 x 182 mm	**3752226**
		DN50 – DN65 x 180 mm	**3752225**
		DN50 – DN80 x 185 mm	**3752227**
		DN50 – DN100 x 197 mm	**1688590458**
		DN65 – DN80 x 197 mm	**1688421401**
		DN65 – DN100 x 197 mm	**1688421412**
		DN80 – DN100 x 202 mm	**1688421423**
		DN80 – DN125 x 232 mm	**1688421434**
		DN80 – DN150 x 245 mm	**1688602591**
		DN100 – DN125 x 234 mm	**1688421445**
		DN100 – DN150 x 247 mm	**1688421456**
		DN125 – DN150 x 250 mm	**1688421467**

ELBOW PIPE

Angle	90°, male/female	Rp3/4"	**3333109257**
		Rp1"	**3333103790**
		Rp1"1/4	**3333116894**
		Rp1"1/2	**3333103791**
		Rp2"	**3333103792**
	90°, female/female	Rp1"	**3333109311**
		Rp1"1/2	**3333110711**
		Rp2"	**3333110712**
Elbow	PN16, connection Rp1/2"	DN40 x 99 mm	**3752182**
		DN50 x 121 mm	**3752183**
		DN65 x 140 mm	**3752184**
		DN80 x 164,5 mm	**3752185**
		DN100 x 204,5 mm	**1688421354**
		DN125 x 245,5 mm	**1688421365**
		DN125 x 283,5 mm	**1688421376**
Connection piece 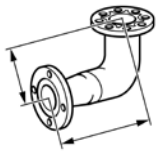	90°, flanged PN16	DN65 – DN40 x 235 mm	**1688551557**
		DN65 – DN50 x 235 mm	**1688551568**
		DN80 – DN40 x 246,5 mm	**1688421092**
		DN80 – DN50 x 249,5 mm	**1688421105**
		DN80 – DN65 x 249,5 mm	**1688421116**
		DN80 – DN80 x 264,5 mm	**1688421127**
		DN80 – DN100 x 266,5 mm	**1688590481**
		DN100 – DN65 x 297,5 mm	**3755875**
		DN100 – DN80 x 302,5 mm	**1688551615**
		DN150 – DN65 x 503,5 mm	**1688666166**
		DN150 – DN80 x 418,5 mm	**1688421138**
		DN150 – DN100 x 420,5 mm	**1688421149**
		DN150 – DN125 x 423,5 mm	**1688421150**
		DN150 – DN150 x 423,5 mm	**1688421161**

GAS PIPE

Connections	h3/8"-Rp1/2"x300 mm with two connections 1/2" and one connection 1/4" for DMV SE 512		**3333212374**
	d2"-Rp2"x300 mm with two connections 1/2" and one connection 1/4" for DMV SE 520		**3333212375**
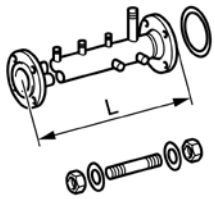	Connections for test burner, pressure switch, pressure valve, pressure release valve, ignition valve, safety valve	DN40 x 900 mm	**14030405**
		DN50 x 900 mm	**14030449**
		DN65 x 950 mm	**code on request**
		DN80 x 1100 mm	**14030504**
		DN100 x 1300 mm	**14030537**
		DN125 x 1550 mm	**code on request**
		DN150 x 1800 mm	**14030570**

SEALS AND CONNECTING KIT

	Screwing set: **1 seal,** **4 bolts,** **4 nuts,** **4 washers**	DN25	**3751547**
		DN40	**3751040**
		DN50	**3756205**
		DN65	**3756206**
		DN80	**3756207**
		DN100	**3756208**
		DN125	**3756209**
		DN150	**3756210**

UNITS FOR AIR-SEPARATION OF RETURN FUEL, TYPE LBA...A

Units for air-separation of return fuel for single-pipe installation with monoblock burners and systems according to DIN 4755/2 and TRD 411 or TRD 604.

- Fuel: light oil type EL and L (heavy oil M and S on request)
- Supply pressure: 1 to 5 bar
- Internal setting: max 45°C

Other designs (e.g. for suction operation or deviating accessories) may be provided on request.

Basic design A for supply pressure:

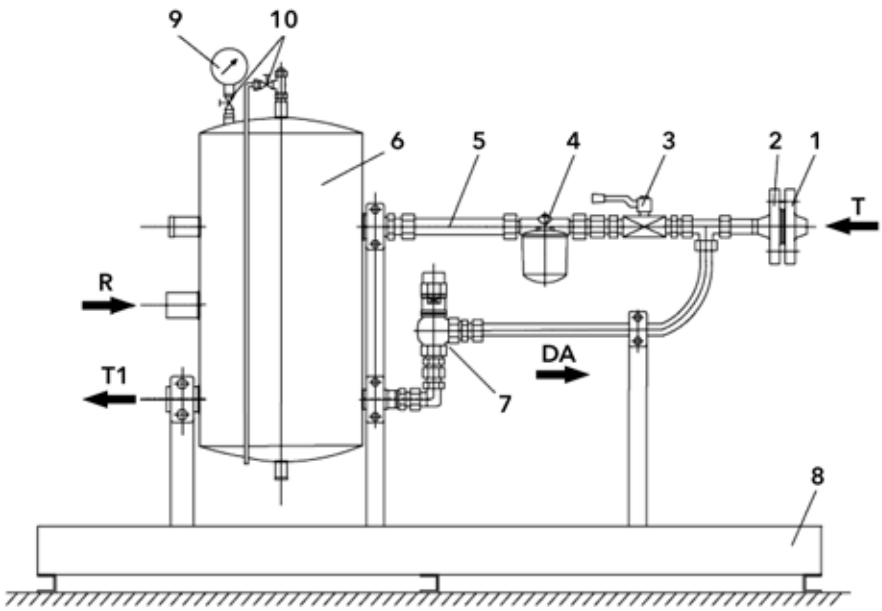

Base equipment

1. Welded flange PN16
2. Connecting flange PN16
3. Ball valve PN16
4. Fuel filter
5. Fuel rate counter with roller counter
6. Pressure tank
7. Relief valve
8. Fuel collector with holding
9. Glycerol manometer 0...10 bar
10. Air valve

		LBA 600 A	LBA 1200 A	LBA 2400 A	LBA 3000 A
Burner pump capacity	[l/h]	600	1200	2400	3000
Fuel rate for burner capacity "T"	[l/h]	10 … 200	10 … 400	30 … 1000	75 … 2000
Flange connection "T" on feed line	PN16	DN15	DN15	DN20	DN25
Burner connection "R" and "T1" (feed + return pipe)		Rp1/2"	Rp3/4"	Rp1"	Rp1"
Volume pressure tank	[l]	5	18	30	30
Dimension L x B	[mm]	1050 x 360	1400 x 500	1400 x 500	1400 x 500
Code		**on request**	**on request**	**on request**	**on request**

OPTIONS FOR AIR-SEPARATION UNIT, TYPE LBA...A

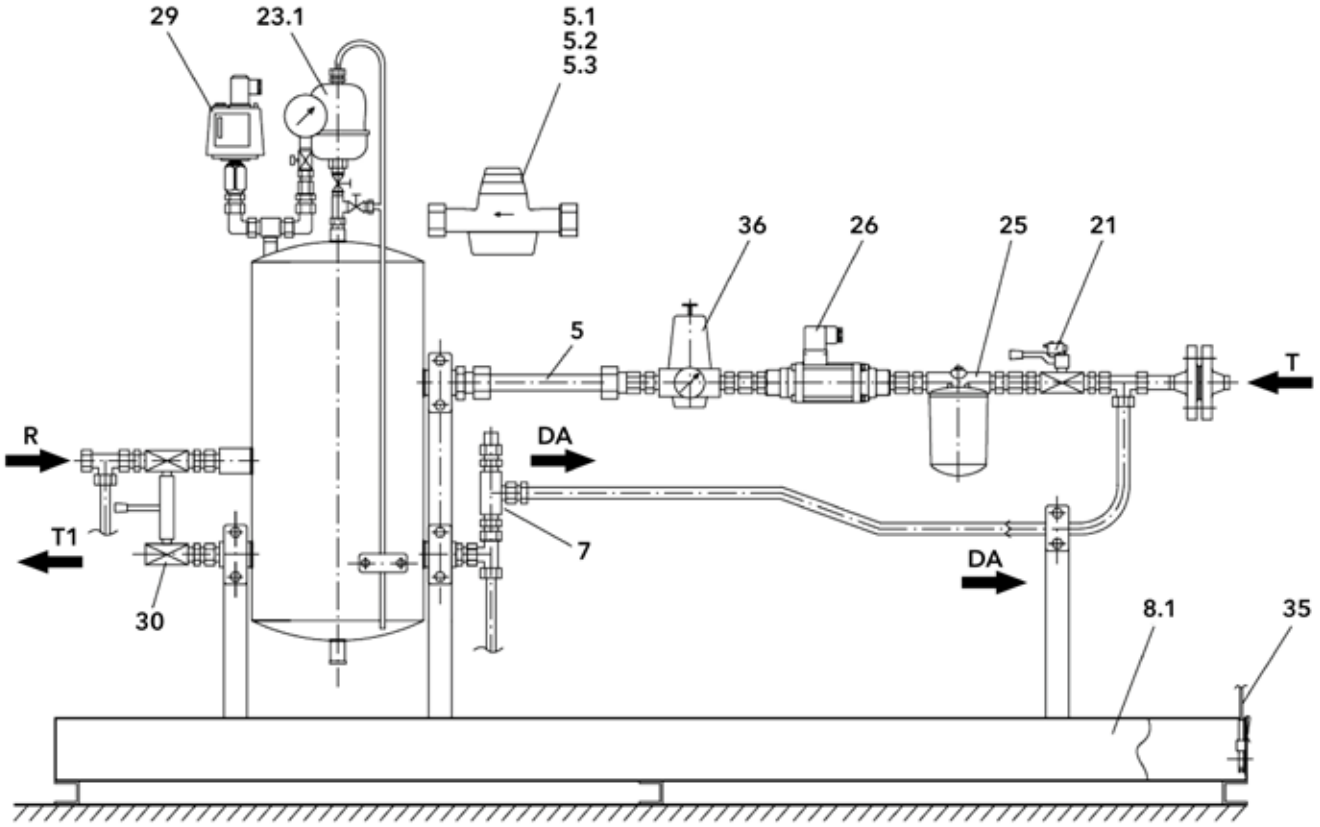

Ref.	Brief description	Description	LBA 600 A	LBA 1200 A	LBA 2400 A	LBA 3000 A
5.1	HZ	Oil meter	VZO 15 to 25 RC			
5.2	RV	Pulse generator RV (Reed)	RV = 0,1 for VZO 15; RV = 1 for VZO 20 – 40			
5.3	IN	Pulse generator IN (Inductive)	IN = 0,1 for VZO 15; IN = 1 for VZO 20 – 40			
21	EE	End position switch, including bracket	230 V / 50 Hz / IP65, mounted onto ball valve, tested at installation			
23	G / SE	Automatic float air vent for optimum ventilation	Rp3/8", PN16, 150°C			
25	EF	Fuel filter	Rp3/4", PN10, 100µ	Rp3/4", PN10, 100µ	Rp1", PN6, 100µ	Rp1", PN6, 100µ
26	M	Piston solenoid valve, DIN & TÜV tested	Rp1/2" – DN10	Rp1/2" – DN10	Rp3/4" – DN15	Rp1" – DN15
29	S	Oil pressure switch	Rp1/2", 230 V / 50 Hz, setting range 0,5 ... 6 bar			
30	DK	Double ball valve combination	Rp1/2"	Rp3/4"	Rp3/4"	Rp1"
35	LH	Leakage detector integrated into oil pan, type LMW	230 V / 50 Hz / IP65, sensor length: 1,5 m			
36	DM	Pressure regulator valve	0,2 ... 2,5 bar			
7	DA	Pressure equalization as safety valve with component test available at an additional cost, set to 3 bar with sealing cap				

All codes on request.

OIL CONNECTION UNIT

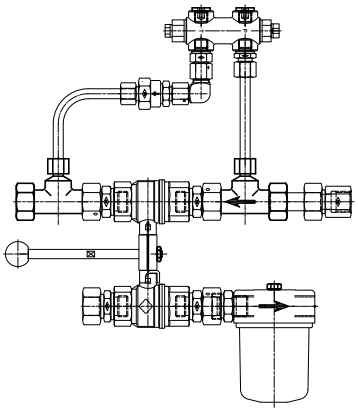

Unit consists of:
- double ball valve (with or without limit switch);
- oil filter
- safety valve with relief valve, non return valve
- pipes, theaded connections, seals

Unit with double ball valve with limit switch	Rp 1/2"	**3755291**
	Rp 3/4"	**3754259**
	Rp 1"	**3755292**
Unit with double ball valve without limit switch	Rp 1/2"	**14037863**
	Rp 3/4"	**14037874**
	Rp 1"	**14037885**

MANOMETER

	Manometer/vacuometer glycerine-filled Connection Rp1/2" A radial	-1...+3 bar	**1098748467**
		-1...+5 bar	**1098748478**
		0...4 bar	**1098748489**
		0...6 bar	**3333116345**
		0...10 bar	**1098748490**
		0...16 bar	**1098585471**
		0...25 bar	**3333261128**
		0...40 bar	**1090160374**
		0...60 bar	**1098114290**
	Kit manometer hydraulic block N6/N7		**3755398**

LEAKAGE CONTROL DEVICE

	Signal device for oil for wall mounting LMW with 1 optoelectronic detector, signal part in housing HxBxT=140x85x60mm 230 V / 50-60 Hz / IP40	
	with cable 1,5 m	**3755932**
	with cable 15 m	**3755933**
	with cable 30 m	**3755934**

AIR VALVE

Automatic air valve with ball valve Rp3/8"	**1478812577**

RELIEF/PRESSURE MAINTAINING VALVE

		Connection (DN)	Fuel rate	Pressure	
	Threaded design, directly adjustable, with spring load for keeping adjusted working and max pressure, viscosity range 2,8...480 cSt	1/4"	6...120 l/h	0,5...1,5 bar	**1478812044**
				1...4 bar	**1478730083**
				2...9 bar	**1478731940**
		3/8"	15...160 l/h	0,5...1,5 bar	**1478812055**
				1...4 bar	**1478812066**
				2...9 bar	**1478812077**
		1/2"	30... 600 l/h	0,5...1,5 bar	**1478812088**
				1...4 bar	**1478720874**
				2...9 bar	**1478812099**
		3/4"	100...2000 l/h	0,5...3,5 bar	**1478812102**
				2...9 bar	**1478812113**
		1"	300...6000 l/h	0,5...1,5 bar	**1478812124**
				1...4 bar	**1478812135**
				2...9 bar	**1478812146**
		1"1/4	500...10000 l/h	0,5...1,5 bar	**1478812157**
				1...4 bar	**12001314**
				2...9 bar	**1478812168**
	Flanged design, directly adjustable, with spring load for keeping adjusted working and max pressure, viscosity range 2,8...480 cSt	DN15	30...600 l/h	0,5...1,5 bar	**1478812179**
				1...4 bar	**1478729973**
				2...9 bar	**1478812180**
		DN20	100...2000 l/h	0,5...3,5 bar	**1478812191**
				2...9 bar	**1478812204**
		DN25	300...6000 l/h	0,5...1,5 bar	**1478812215**
				1...4 bar	**1478785851**
				2...9 bar	**1478812226**
		DN32	500...10000 l/h	0,5...1,5 bar	**1478812237**
				1...4 bar	**1478812248**
				2...9 bar	**1478812259**

WELDED FLANGE

	Welded flange PN 16 according to DIN 2633, form C from RSt 37-2 as external flange for oil mounting PN16	DN15	**5318675203**
		DN20	**3333101876**
		DN25	**5318353059**
		DN32	**5318704652**
		DN40 x 42 mm	**5318353048**
		DN50 x 45 mm	**5318428082**
	Welded flange PN40 according to DIN 2635, form C from C22 as external flange for oil mounting PN40	DN15	**5318557486**
		DN20	**3333101916**
		DN25	**5318556494**
		DN32	**5318556507**
		DN40 x 42 mm	**5318556518**
		DN50 x 45 mm	**5318575308**

SEALS AND CONNECTING KIT

Screwing set: 1 seal, pin screws, hexagon nuts, lining washer	DN15 PN16 / PN40	**3752201**
	DN20 PN16 / PN40	**3752202**
	DN25 PN16 / PN40	**3752203**

BALL VALVE

0...60°C for 64 bar, 0...120°C for 40 bar, 20...150°C for 30 bar	1/4"	1478736157
	1/2"	1478736168
	3/4"	1478736179
	1"	1478736180
-20...150°C for 16 bar	DN25	1478732910
	DN32	1478732921
	DN40	1478732932
	DN50	1478732943
	DN65	1478732954
	DN80	1478732965
-20...120°C for 40 bar, -20...150°C for 30 bar	DN15	1478734938
	DN20	1478734949
	DN25	1478734950
	DN32	1478734961
	DN40	1478734972
	DN50	1478734983

LIGHT OIL FILTER

300 – 100 l/h	Rp3/8" male (burner side) / female – 70 µm – one pipe	3333110172
700 – 200 l/h	Rp1/2" female (burner side) / female – 75 µm – one pipe	3333115483
300 – 100 l/h	Rp3/8" male (burner side) / female – 70 µm – two pipes	3333110175
700 – 200 l/h	Rp1/2" female (burner side) / female – 75 µm – two pipes	3755728

OIL FILTER FD FOR SUCTION AND PRESSURE OPERATION

Oil pressure max. 2 bar	Rp 1/2" – 700 l/h	3754100
	Rp 3/4" – 1700 l/h	3754101
	Rp 1" – 2000 l/h	3754102

LIGHT OIL FLOW COUNTER

Without pulse transducer	10 ... 400 l/h	16 bar	Rp1/2"	**1368746803**
	10 ... 400 l/h	16 bar	DN15	**1368746892**
	30 ... 1000 l/h	16 bar	Rp3/4"	**1368746836**
	30 ... 1000 l/h	16 bar	DN20	**1368746927**
	75 ... 2000 l/h	16 bar	Rp1"	**1368746869**
	75 ... 2000 l/h	16 bar	DN25	**1368746950**
With pulse transducer RV 0,1 (Reed)	10 ... 400 l/h	16 bar	Rp1/2"	**1368746814**
	10 ... 400 l/h	16 bar	DN15	**1368746905**
	30 ... 1000 l/h	16 bar	Rp3/4"	**1368746847**
	30 ... 1000 l/h	16 bar	DN20	**1368746938**
	75 ... 2000 l/h	16 bar	Rp1"	**1368746870**
	75 ... 2000 l/h	16 bar	DN25	**1368746961**
With pulse transducer IN 0,01 (Inductive)	10 ... 400 l/h	16 bar	Rp1/2"	**1368746825**
	10 ... 400 l/h	16 bar	DN15	**1368746916**
	30 ... 1000 l/h	16 bar	Rp3/4"	**1368746858**
	30 ... 1000 l/h	16 bar	DN20	**1368746949**
	75 ... 2000 l/h	16 bar	Rp1"	**1368746881**
	75 ... 2000 l/h	16 bar	DN25	**1368746972**
Threaded connection	VSR – Rp1/2"			**3753933**
	VSR – Rp3/4"			**3754536**
	VSR – Rp1"			**3755097**

NOTES

Subsidiaries ELCO

GERMANY

ELCO GmbH

Dreieichstraße 10
Mörfelden-Walldorf
Tel.: +49 (0) 6105 287-287
Fax: +49 (0) 6105 287-199

NETHERLANDS

Elco Burners B.V.

Meerpaalweg, 1 - 1332 BB Almere
P.O. box 30048 - 1303 AA Almere
Tel.: +31 088 69 573 11
Fax: +31 088 69 573 90

SWITZERLAND

Elcotherm AG

Sarganserstrasse 100
7324 Vilters
Tel.: +41 (0)81 725 25 25
Fax: +41 (0)81 723 13 59

AUSTRIA

ELCO Austria GmbH

Aredstraße 16 - 18
2544 Leobersdorf
Tel.: +43 (0)2256 639 99 32
Fax: +43 (0)2256 644 11

FRANCE

14, rue du Saule Trapu
Parc d'activité du Moulin
91882 Massy
Tel.: +33 01 60 13 64 64
Fax: +33 01 60 13 64 65

ITALY

Via Roma, 64
31023 Resana (TV)
Tel.: +39 0423 719500
Fax: +39 0423 719580

UK & IRELAND

Ariston Thermo UK Ltd

Suite 3, The Crown House
Blackpole East, Blackpole Road,
Worcester WR3 8SG
Tel.: +44 01905 788010

CHINA

Ariston Heating Solutions (China) Co., Ltd.

25th floor, T1, Shanghai T-Center
No. 1428 Daduhe Road, Putuo District, Shanghai
Tel.: +86 21 6039 8691
Fax: +86 21 6039 8620

Contact us to know more about our products and solutions

www.elco-burners.com

contact@elco-burners.com

Version 2.1 | 23/08/2024

All rights reserved | ELCO declines all responsibility for any printing mistakes or any content transcription in the present document and reserves the right to modify, without prior notice, any product datas or characteristics