PROTRON

P2.210 G-U/TCG

www.elco-burners.com

ПРОМЭЛЕКТРОНИКА / sales@prom-elec.com

INNOVATION

Since its foundation in 1928, ELCO has always been a specialist in burners conception and manufacturing. By linking a strong innovative ability to a continued developing drive, ELCO has designed high performing and reliable burners as well as corresponding services throughout the years, and is today one of the leaders in the field of combustion technology.

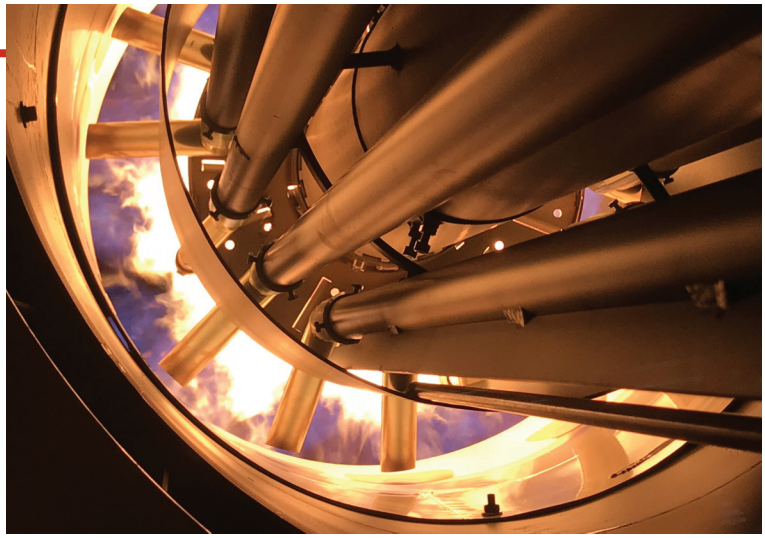

RESEARCH AND DEVELOPMENT

ELCO always looks for the best technologies and continues to develop new ones to improve the efficiency of its solutions.
Our R&D Laboratories are committed to develop innovative technological solutions allowing to:

- optimise the running of the installations lowering costs;
- offer service friendly products easy to maintain;
- preserve the environment lowering acoustic and pollutant emissions.

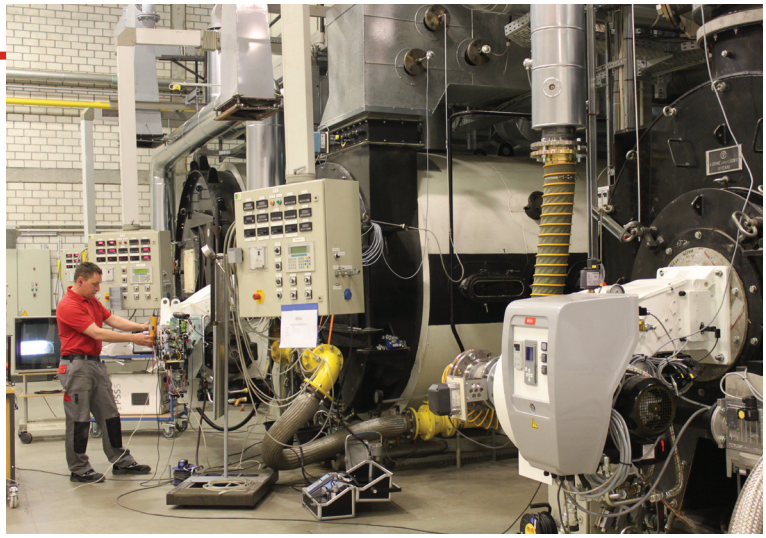

OUR PRODUCT RANGE

Our experience at combustion technology
available in a complete range of burners from 11 kW to 80 MW:

VECTRON	PROTRON	NEXTRON	EK EVO	N
11 - 2300 kW	17 - 550 kW	250 - 11200 kW	250 - 13500 kW	1300 - 22000 kW

CUTTING-EDGE BURNERS FOR HEATING AND INDUSTRIAL APPLICATIONS

KNOW-HOW

Your contacts at ELCO and its partners are recognised experts with years of experience.
Our worldwide support starts from concept creation to planning, design and project management up to commissioning and on-going operation of the plant throughout its life cycle.
As an ELCO customer, you can rely on your installation to perform reliably. Our guarantee is backed up by a service that sets standards in our field.

WORLDWIDE NETWORK

Capitalising on more than 90 years of work experience, ELCO has been capable to build up loyal partnerships and today can count on reliable Partners all over the World.
Combining an instinctively global perspective with a genuinely multicultural approach ELCO today offers you skilled and experienced experts available in more than 70 Countries.

In Europe
3 production plants
6 commercial branches
Strong commercial presence through a network of reliable dealers and partners

Worldwide
2 Sales Offices in Russia and China
Distribution in over 70 Countries

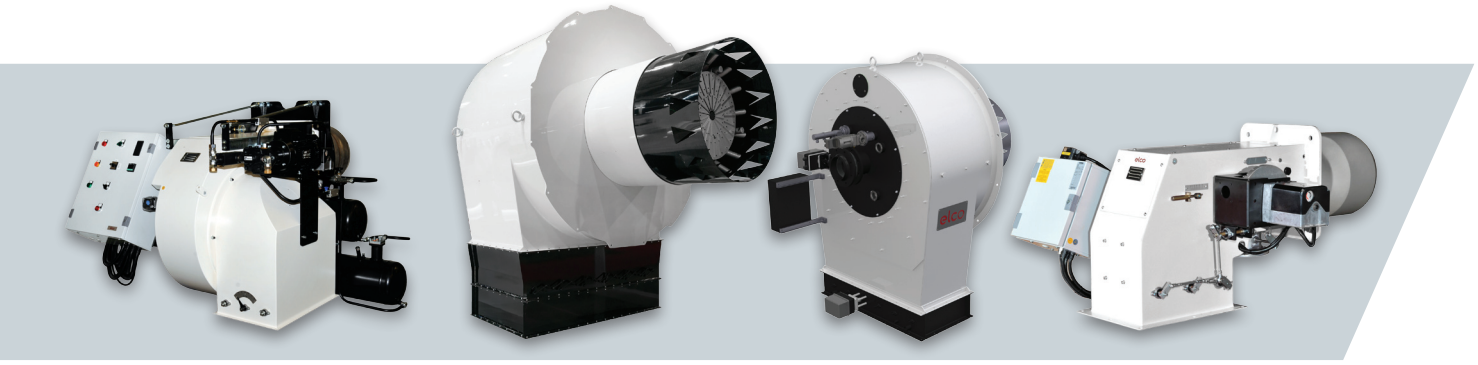

HO/GHO-TRON
68 - 17000 kW

RPD
500 - 80000 kW

EK-DUO
600 - 16000 kW

D-TRON
230 - 34000 kW

MONOBLOCK

PROTRON

Monoblock burners from 17 kW to 550 kW in gas and light oil

- Heat resistant, compact layout, easy maintenance, integral protection cover, graphic display: the PROTRON range has been especially designed for light industry applications
- PROTRON burners are characterized by high versatility allowing this range to be used in several installations within the process industry: ovens, dryers, spray booths, incinerators, hot air generators

NATURAL

LIGHT OIL

All PROTRON burners feature:

- 8 combinations of software programming to satisfy any application requirement with options like: Quick Start System, tightness control, adjustable pre-purge and post-purge, permanent ventilation.
- burners configurated in factory by our technicians
- quiet ventilation and reduced electrical consumption
- complete electrical equipment in the body of the burner with control panel
- products are in compliance with EN676 and EN267 European standards and with the following directives: 2016/426/EU Gas Appliances Directive, 2014/30/EU EMC Directive, 2014/35/EU Low Voltage Directive, 2006/42/EC Efficiency Directive, 2011/65/EU RoHS2 Directive

PROTRON _ P2.210 G-U/TCG

- Operation: one stage;
- Emission class: Low NOx class 3 (<80 mg/kWh) according to EN676;

WORKING DIAGRAM

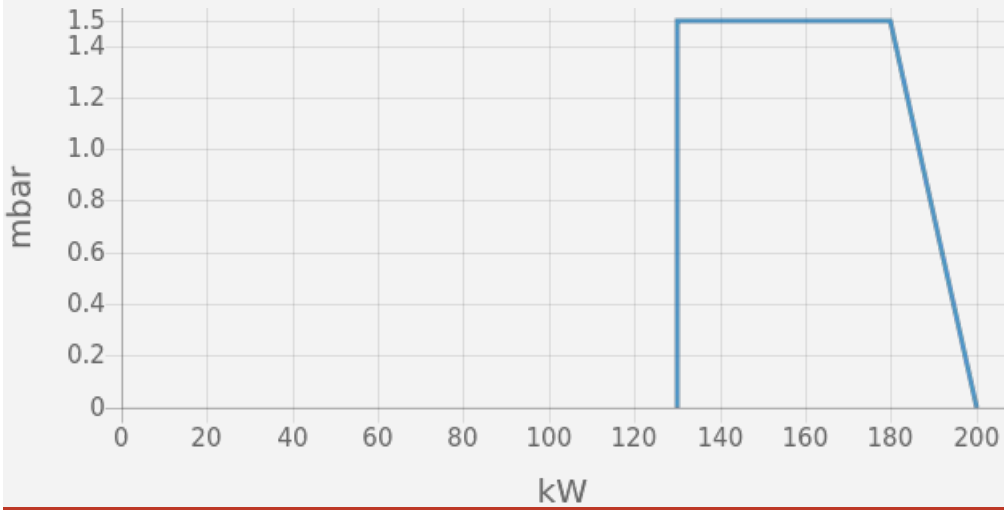

TECHNICAL DATA

Minimum power output (kW)	140
Maximum power output (kW)	210
Minimum gas pressure (mbar)	20
Maximum gas pressure (mbar)	300
Fan motor (kW)	0.13
Protection level	IP21

OTHER AVAILABLE CONFIGURATIONS

- Post-ventilation;
- Continuous ventilation;
- Adjustable pre-purge;
- Quick start

OVERALL DIMENSIONS

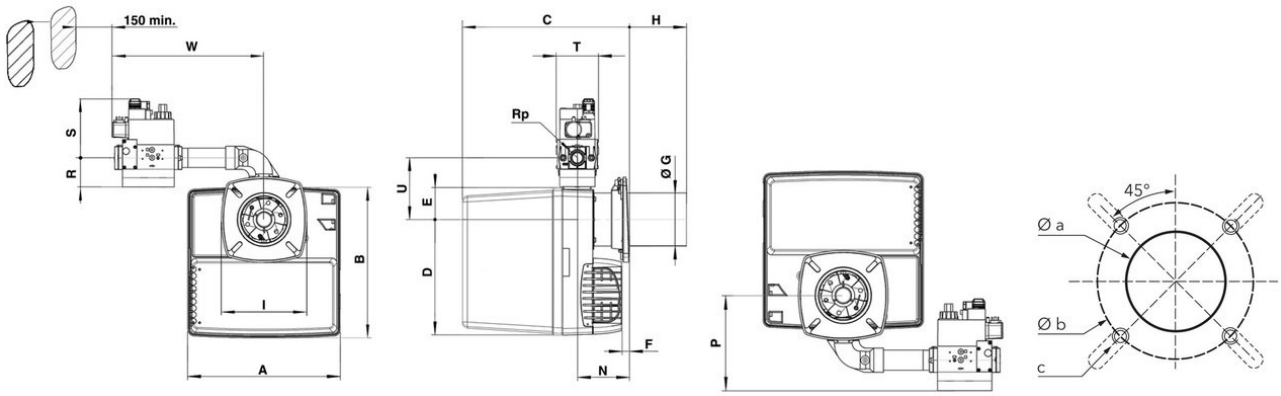

A	B	C	D	E	F	G	H	I	J	P	R	S	T	U	W	Øa	Øb	c
331	325	KN: 365…485 / KL: 365…605	256	69	15 min.	115	KN: 30…150 / KL: 30…270	185	113 min.	188 max.	55 max.	160 max.	145 max.	133	360 max.	120-135	150-184	M8

Subsidiaries ELCO

GERMANY

ELCO GmbH

Dreieichstraße 10
Mörfelden-Walldorf
Tel.: +49 (0) 6105 287-287
Fax: +49 (0) 6105 287-199

NETHERLANDS

Elco Burners B.V.

Meerpaalweg, 1
1332 BB Almere
P.O. box 30048
1303 AA Almere
Tel. +31 088 69 573 11
Fax +31 088 69 573 90

FRANCE

14, rue du Saule Trapu
Parc d'activité du Moulin
91882 Massy
Tel. +33 01 60 13 64 64
Fax +33 01 60 13 64 65

SWITZERLAND

Elcotherm AG

Sarganserstrasse 100
7324 Vilters
Tel. +41 (0)81 725 25 25
Fax +41 (0)81 723 13 59

AUSTRIA

ELCO Austria GmbH

Aredstraße 16 - 18
2544 Leobersdorf
Tel. +43 (0)2256 639 99 32
Fax +43 (0)2256 644 11

ITALY

Via Roma, 64
31023 Resana (TV)
Tel. +39 0423 719500
Fax +39 0423 719580

UK & IRELAND

Ariston Thermo UK Ltd

Suite 3, The Crown House
Blackpole East, Blackpole Road,
Worcester WR3 8SG
Tel. +44 01905 788010
Fax +44 01905 788011

RUSSIA

Ariston Thermo RUS

Eniseyskaya str. 1, bld 1,
Office Center "LIRA" #438
129344 Moscow
Tel. +7 495 213 0300 #5700
Fax +7 495 213 0302

CHINA

Ariston Thermo (China) Co., Ltd.

F/15, V-Capital Bldg
No. 333 Xian Xia Road
200336 Shanghai
Tel. +86 21 6039 8691
Fax +86 21 6039 8620

Contact us to know more
about our products and solutions

www.elco-burners.com
contact@elco-burners.com