NEXTRON

N6.2900 L-E

www.elco-burners.com

ПРОМЭЛЕКТРОНИКА / sales@prom-elec.com

INNOVATION

Since its foundation in 1928, ELCO has always been a specialist in burners conception and manufacturing. By linking a strong innovative ability to a continued developing drive, ELCO has designed high performing and reliable burners as well as corresponding services throughout the years, and is today one of the leaders in the field of combustion technology.

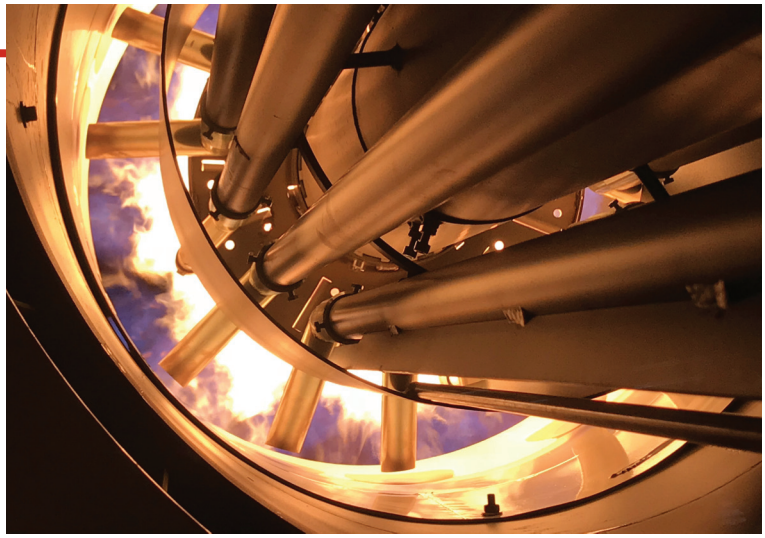

RESEARCH AND DEVELOPMENT

ELCO always looks for the best technologies and continues to develop new ones to improve the efficiency of its solutions.
Our R&D Laboratories are committed to develop innovative technological solutions allowing to:

- optimise the running of the installations lowering costs;
- offer service friendly products easy to maintain;
- preserve the environment lowering acoustic and pollutant emissions.

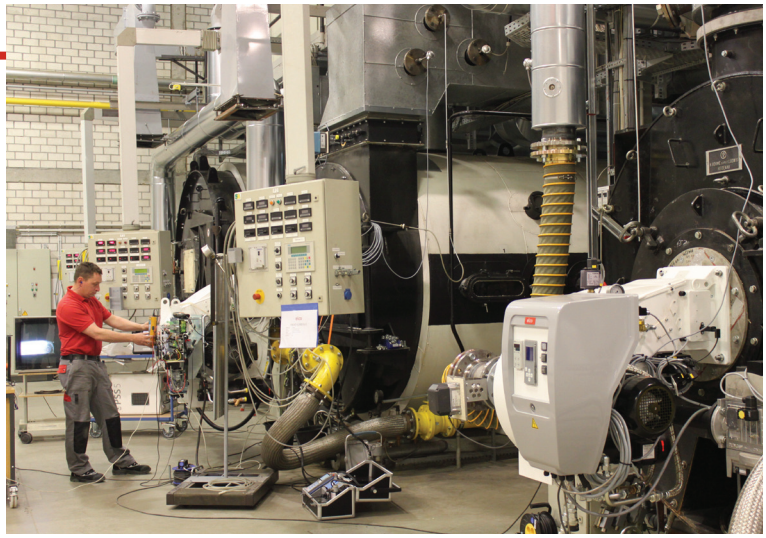

OUR PRODUCT RANGE

Our experience at combustion technology
available in a complete range of burners from 11 kW to 80 MW:

VECTRON	PROTRON	NEXTRON	EK EVO	N
11 - 2300 kW	17 - 550 kW	250 - 11200 kW	250 - 13500 kW	1300 - 22000 kW

CUTTING-EDGE BURNERS FOR HEATING AND INDUSTRIAL APPLICATIONS

KNOW-HOW

Your contacts at ELCO and its partners are recognised experts with years of experience.
Our worldwide support starts from concept creation to planning, design and project management up to commissioning and on-going operation of the plant throughout its life cycle.
As an ELCO customer, you can rely on your installation to perform reliably. Our guarantee is backed up by a service that sets standards in our field.

WORLDWIDE NETWORK

Capitalising on more than 90 years of work experience, ELCO has been capable to build up loyal partnerships and today can count on reliable Partners all over the World.
Combining an instinctively global perspective with a genuinely multicultural approach ELCO today offers you skilled and experienced experts available in more than 70 Countries.

In Europe
3 production plants
6 commercial branches
Strong commercial presence through a network of reliable dealers and partners

Worldwide
2 Sales Offices in Russia and China
Distribution in over 70 Countries

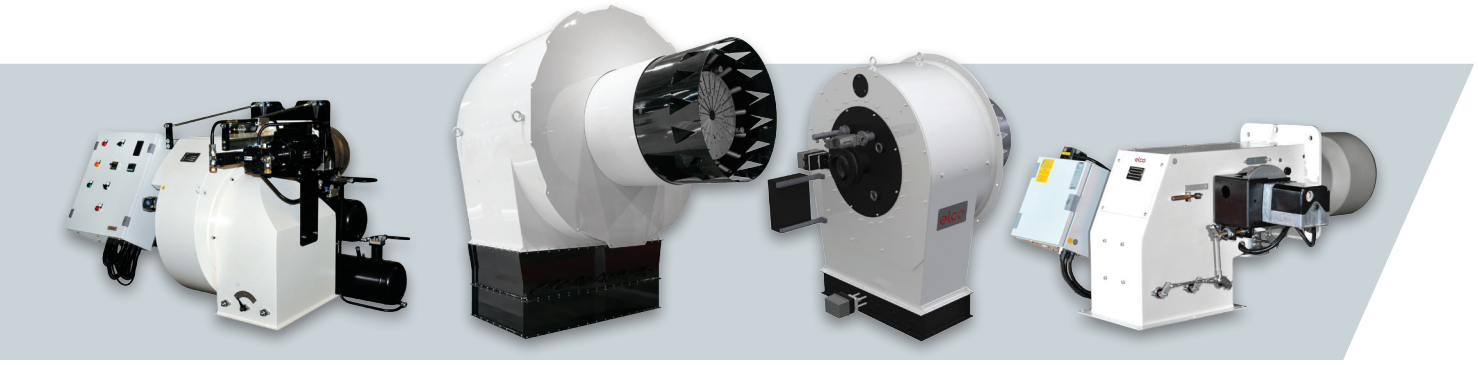

HO/GHO-TRON
68 - 17000 kW

RPD
500 - 80000 kW

EK-DUO
600 - 16000 kW

D-TRON
230 - 34000 kW

MONOBLOCK

NEXTRON

Monoblock burners from 250 kW to 11200 kW in gas, light oil and dual fuel

- The original design of NEXTRON range is the result of a successful integration between burner and ELCO technologies
- The NEXTRON burner range offers high acoustic comfort thanks to the Low Noise System. The patented air intake channel is carefully designed to achieve an acoustic level significantly lower than 80 dB(A) up to 10 MW

NATURAL

DUAL FUEL

LIGHT OIL

All NEXTRON burners feature:

- Integrated switch cabinet (ISC System) with modular concept complete for an easy installation with: BT300 control box (MDE2 System and display), fan motor direct start-up, enumarated connection terminals (available as options: power regulator, speed controller, O2/CO regulator and BUS interface)
- Innovative design allowing easy access to burner components for fast start-up and reduced maintenance time and space
- Unique air intake channel design (patented) to reduce acoustic levels (Low Noise System)
- Products are in compliance with EN676 and EN267 European standards and with the following directives: 2014/35/EU Low Voltage Directive, 2014/30/UE EMC Directive, 2016/426/UE Gas Appliances Directive, 2006/42/EC Machinery Directive, 2011/65/EU RoHS2 Directive

NEXTRON _ N6.2900 L-E

WORKING DIAGRAM

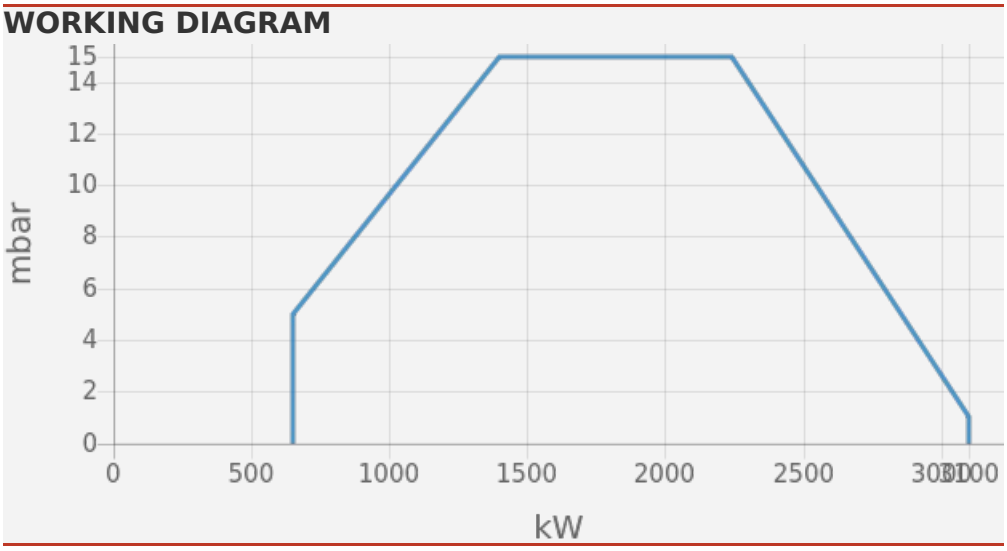

- Operation: two stage progressive/modulating electronic;
- Emission class: Low NOx class 2 (<185 mg/kWh) according to EN267

TECHNICAL DATA

Minimum power output (kW)	650
Maximum power output (kW)	3100
Fan motor (kW)	4
Protection level	IP41

OTHER AVAILABLE CONFIGURATIONS

- Permanent ventilation;
- 60 Hz version;
- Remote display;
- LPG firing;
- Hinge flange

OVERALL DIMENSIONS

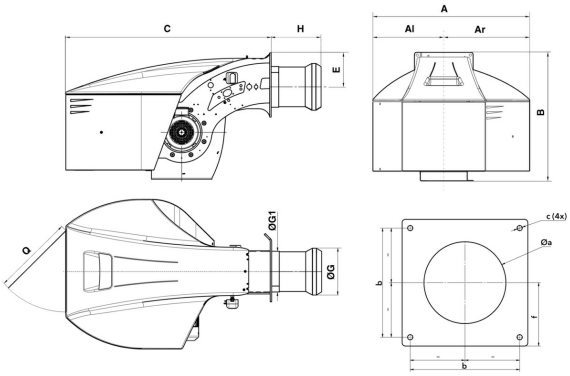

Al	Ar	A	B	C	E	G	G1	H	Q	Øa	b	c	f
479	510	990	837	1361	225	310	270	KN: 330 / KM: 450 / KL: 570	600	320-340	340	M16	200

Subsidiaries ELCO

GERMANY

ELCO GmbH

Dreieichstraße 10
Mörfelden-Walldorf
Tel.: +49 (0) 6105 287-287
Fax: +49 (0) 6105 287-199

NETHERLANDS

Elco Burners B.V.

Meerpaalweg, 1
1332 BB Almere
P.O. box 30048
1303 AA Almere
Tel. +31 088 69 573 11
Fax +31 088 69 573 90

FRANCE

14, rue du Saule Trapu
Parc d'activité du Moulin
91882 Massy
Tel. +33 01 60 13 64 64
Fax +33 01 60 13 64 65

SWITZERLAND

Elcotherm AG

Sarganserstrasse 100
7324 Vilters
Tel. +41 (0)81 725 25 25
Fax +41 (0)81 723 13 59

AUSTRIA

ELCO Austria GmbH

Aredstraße 16 - 18
2544 Leobersdorf
Tel. +43 (0)2256 639 99 32
Fax +43 (0)2256 644 11

ITALY

Via Roma, 64
31023 Resana (TV)
Tel. +39 0423 719500
Fax +39 0423 719580

UK & IRELAND

Ariston Thermo UK Ltd

Suite 3, The Crown House
Blackpole East, Blackpole Road,
Worcester WR3 8SG
Tel. +44 01905 788010
Fax +44 01905 788011

RUSSIA

Ariston Thermo RUS

Eniseyskaya str. 1, bld 1,
Office Center "LIRA" #438
129344 Moscow
Tel. +7 495 213 0300 #5700
Fax +7 495 213 0302

CHINA

Ariston Thermo (China) Co., Ltd.

F/15, V-Capital Bldg
No. 333 Xian Xia Road
200336 Shanghai
Tel. +86 21 6039 8691
Fax +86 21 6039 8620

Contact us to know more
about our products and solutions

www.elco-burners.com
contact@elco-burners.com