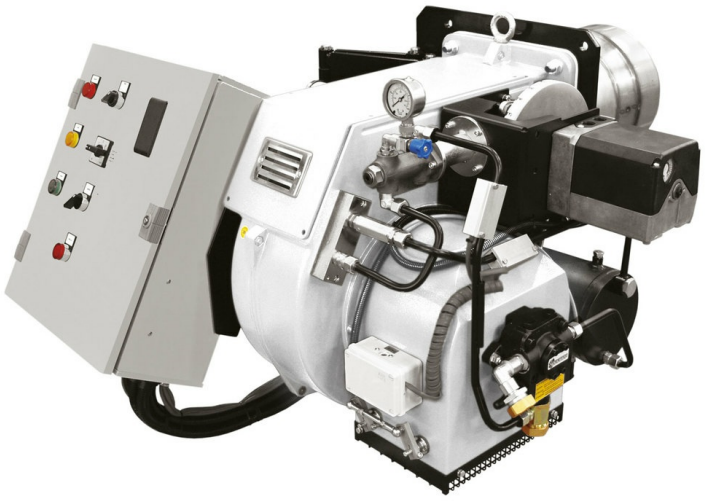

# HO-TRON

## HO-TRON 3.1700 Z

www.elco-burners.com

ПРОМЭЛЕКТРОНИКА / sales@prom-elec.com

## INNOVATION

Since its foundation in 1928, ELCO has always been a specialist in burners conception and manufacturing. By linking a strong innovative ability to a continued developing drive, ELCO has designed high performing and reliable burners as well as corresponding services throughout the years, and is today one of the leaders in the field of combustion technology.

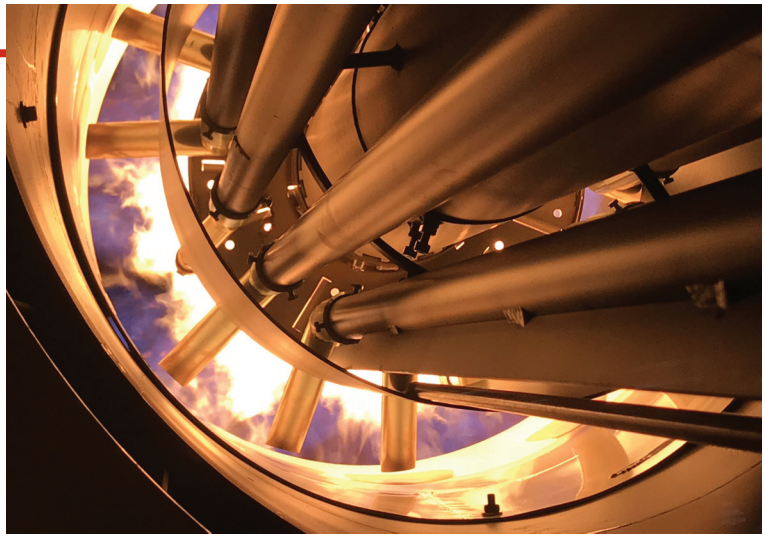

## RESEARCH AND DEVELOPMENT

ELCO always looks for the best technologies and continues to develop new ones to improve the efficiency of its solutions.
Our R&D Laboratories are committed to develop innovative technological solutions allowing to:

- optimise the running of the installations lowering costs;
- offer service friendly products easy to maintain;
- preserve the environment lowering acoustic and pollutant emissions.

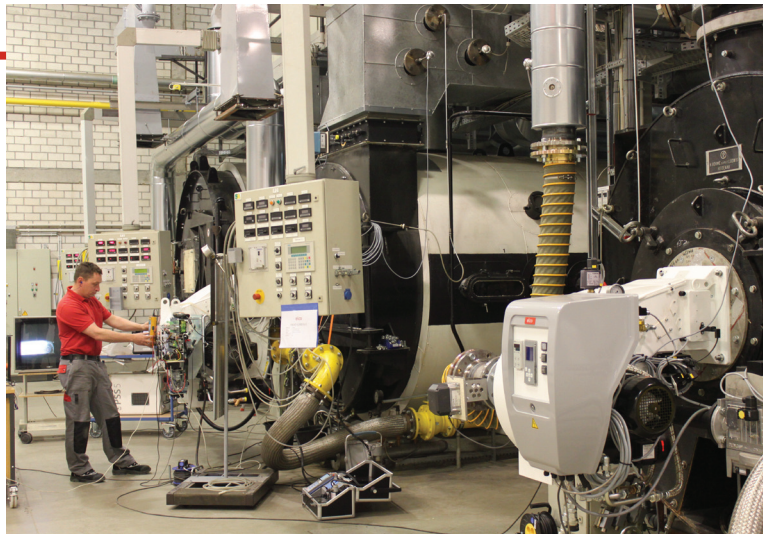

## OUR PRODUCT RANGE

Our experience at combustion technology
available in a complete range of burners from 11 kW to 80 MW:

| VECTRON | PROTRON | NEXTRON | EK EVO | N |
|---|---|---|---|---|
| 11 - 2300 kW | 17 - 550 kW | 250 - 11200 kW | 250 - 13500 kW | 1300 - 22000 kW |

# CUTTING-EDGE BURNERS FOR HEATING AND INDUSTRIAL APPLICATIONS

## KNOW-HOW

Your contacts at ELCO and its partners are recognised experts with years of experience.
Our worldwide support starts from concept creation to planning, design and project management up to commissioning and on-going operation of the plant throughout its life cycle.
As an ELCO customer, you can rely on your installation to perform reliably. Our guarantee is backed up by a service that sets standards in our field.

## WORLDWIDE NETWORK

Capitalising on more than 90 years of work experience, ELCO has been capable to build up loyal partnerships and today can count on reliable Partners all over the World.
Combining an instinctively global perspective with a genuinely multicultural approach ELCO today offers you skilled and experienced experts available in more than 70 Countries.

**In Europe**
3 production plants
6 commercial branches
Strong commercial presence through a network of reliable dealers and partners

**Worldwide**
2 Sales Offices in Russia and China
Distribution in over 70 Countries

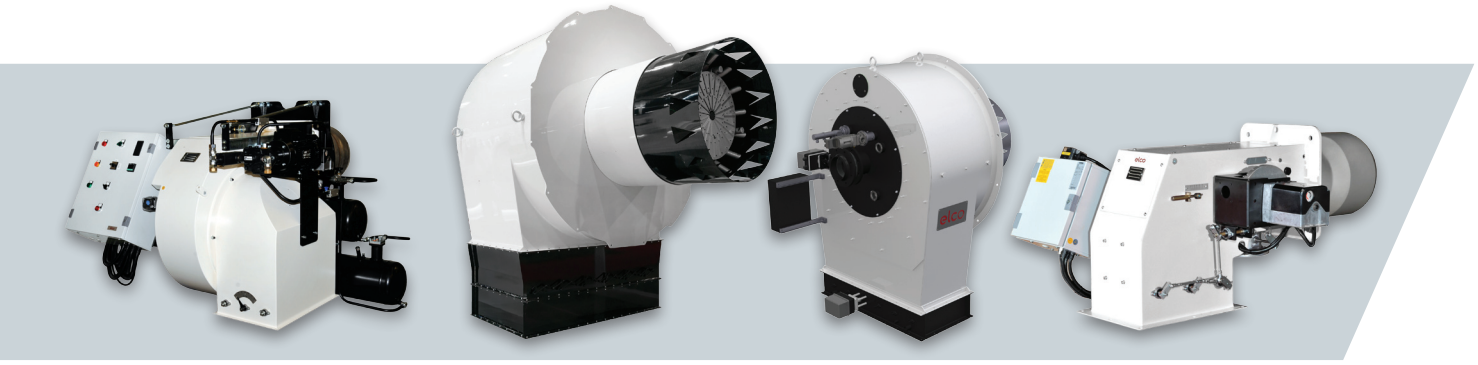

**HO/GHO-TRON**
68 - 17000 kW

**RPD**
500 - 80000 kW

**EK-DUO**
600 - 16000 kW

**D-TRON**
230 - 34000 kW

# MONOBLOCK

# HO-TRON

## Monoblock burners from 68 kW to 17000 kW in heavy oil

HEAVY OIL

- ELCO offers a wide range of heavy oil burners designed for traditional applications and industrial process applications
- All burners feature easy access to the combustion component in order to simplify the maintenance operations
- For a large extent of applications customised solutions can be offered in order to meet plants requirements

## All HO-TRON burners feature:

- pump mounted on the body up to model HO-TRON 6.8500 and separated motor-pump starting from model HO-TRON 6.10500
- electrical heavy oil heater on board (oil supply to the burner at 80°C and 3 bar)
- additional heaters on the pipes and the valves, into the pump and the nozzle holder
- closing of the air flap on burner shut-down
- complete control panel mounted on the burner with electrical equipment
- products are in compliance with EN267 European standard and with the following directives: 2014/35/EU Low Voltage Directive, 2014/30/UE EMC Directive, 2006/42/EC Machinery Directive, 2011/65/EU RoHS2 Directive

# HO-TRON _ HO-TRON 3.1700 Z

- Operation: two stages

## WORKING DIAGRAM

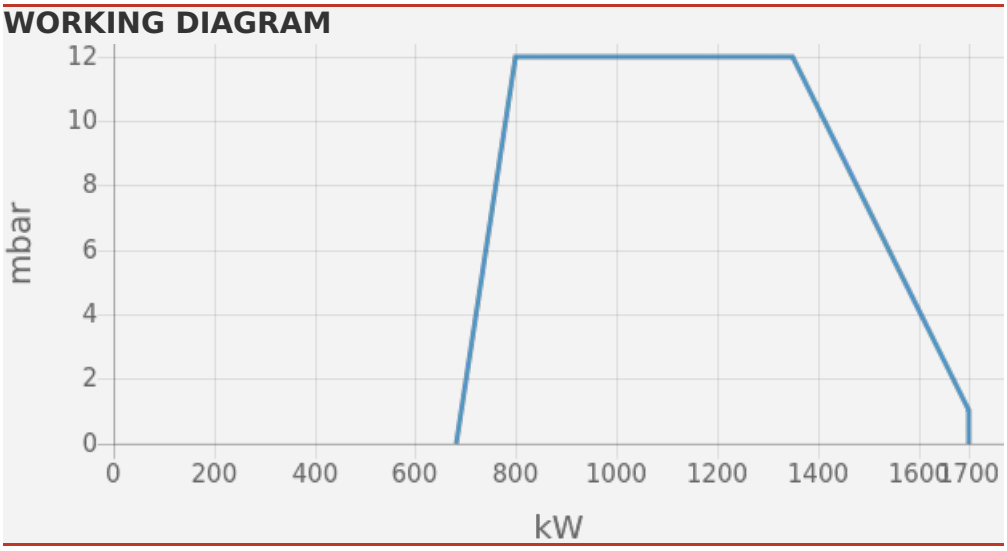


## TECHNICAL DATA

| | |
|---|---|
| Minimum power output (kW) | 682 |
| Maximum power output (kW) | 1700 |
| Fan motor (kW) | 3 |
| Protection level | IP42 |

## OTHER AVAILABLE CONFIGURATIONS

- Continuous ventilation;
- High temperature;
- High viscosity suitable for 118 cSt (15°E) at 80°C

## OVERALL DIMENSIONS

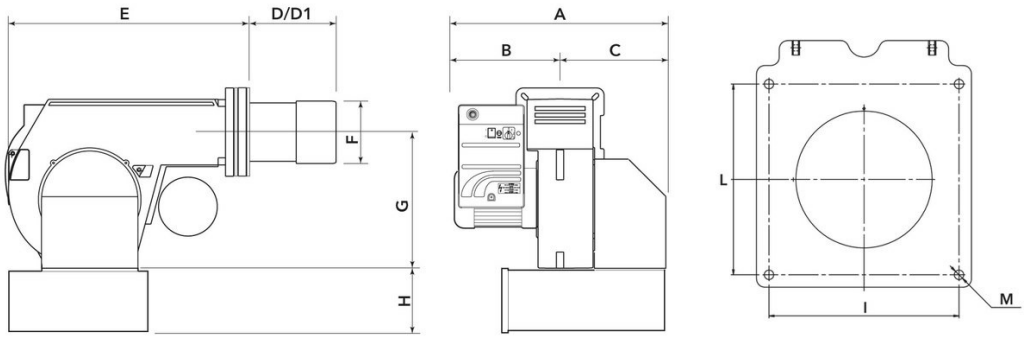


| A | B | C | D | D1 | E | F | G | H | I | L | M |
|---|---|---|---|---|---|---|---|---|---|---|---|
| 920 | 450 | 470 | 280 | 480 | 710 | 250 | 420 | 260 | 315 | 315 | M14 |

## Subsidiaries ELCO


**GERMANY**

ELCO GmbH

Dreieichstraße 10
Mörfelden-Walldorf
Tel.: +49 (0) 6105 287-287
Fax: +49 (0) 6105 287-199

**NETHERLANDS**

Elco Burners B.V.

Meerpaalweg, 1
1332 BB Almere
P.O. box 30048
1303 AA Almere
Tel. +31 088 69 573 11
Fax +31 088 69 573 90

**FRANCE**

14, rue du Saule Trapu
Parc d'activité du Moulin
91882 Massy
Tel. +33 01 60 13 64 64
Fax +33 01 60 13 64 65

**SWITZERLAND**

Elcotherm AG

Sarganserstrasse 100
7324 Vilters
Tel. +41 (0)81 725 25 25
Fax +41 (0)81 723 13 59

**AUSTRIA**

ELCO Austria GmbH

Aredstraße 16 - 18
2544 Leobersdorf
Tel. +43 (0)2256 639 99 32
Fax +43 (0)2256 644 11

**ITALY**

Via Roma, 64
31023 Resana (TV)
Tel. +39 0423 719500
Fax +39 0423 719580

**UK & IRELAND**

Ariston Thermo UK Ltd

Suite 3, The Crown House
Blackpole East, Blackpole Road,
Worcester WR3 8SG
Tel. +44 01905 788010
Fax +44 01905 788011

**RUSSIA**

Ariston Thermo RUS

Eniseyskaya str. 1, bld 1,
Office Center "LIRA" #438
129344 Moscow
Tel. +7 495 213 0300 #5700
Fax +7 495 213 0302

**CHINA**

Ariston Thermo (China) Co., Ltd.

F/15, V-Capital Bldg
No. 333 Xian Xia Road
200336 Shanghai
Tel. +86 21 6039 8691
Fax +86 21 6039 8620


Contact us to know more
about our products and solutions

**www.elco-burners.com**
**contact@elco-burners.com**