# EK EVO

## EK EVO 8.7100 L-E

www.elco-burners.com

ПРОМЭЛЕКТРОНИКА / sales@prom-elec.com

## INNOVATION

Since its foundation in 1928, ELCO has always been a specialist in burners conception and manufacturing. By linking a strong innovative ability to a continued developing drive, ELCO has designed high performing and reliable burners as well as corresponding services throughout the years, and is today one of the leaders in the field of combustion technology.

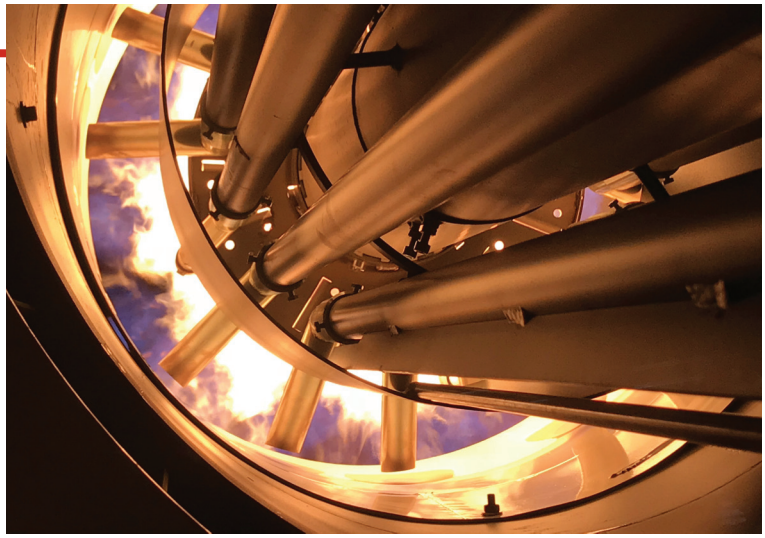

## RESEARCH AND DEVELOPMENT

ELCO always looks for the best technologies and continues to develop new ones to improve the efficiency of its solutions.
Our R&D Laboratories are committed to develop innovative technological solutions allowing to:

- optimise the running of the installations lowering costs;
- offer service friendly products easy to maintain;
- preserve the environment lowering acoustic and pollutant emissions.

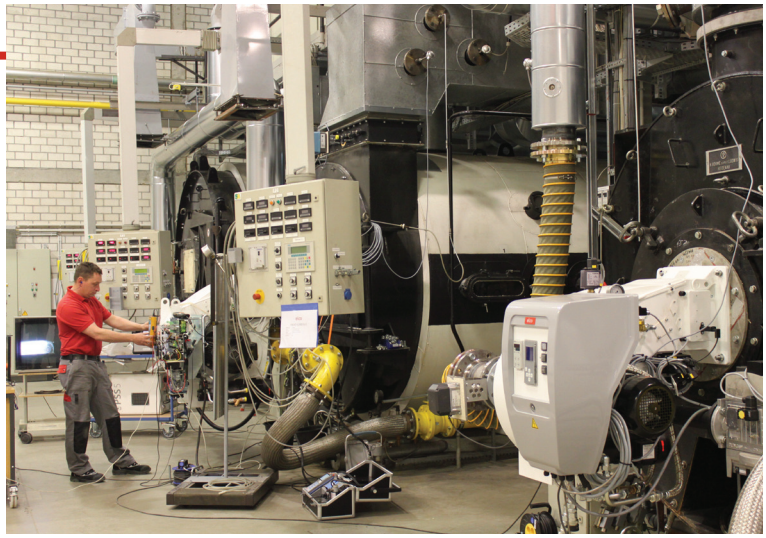

## OUR PRODUCT RANGE

Our experience at combustion technology
available in a complete range of burners from 11 kW to 80 MW:

| VECTRON | PROTRON | NEXTRON | EK EVO | N |
|---|---|---|---|---|
| 11 - 2300 kW | 17 - 550 kW | 250 - 11200 kW | 250 - 13500 kW | 1300 - 22000 kW |

# CUTTING-EDGE BURNERS FOR HEATING AND INDUSTRIAL APPLICATIONS

## KNOW-HOW

Your contacts at ELCO and its partners are recognised experts with years of experience.
Our worldwide support starts from concept creation to planning, design and project management up to commissioning and on-going operation of the plant throughout its life cycle.
As an ELCO customer, you can rely on your installation to perform reliably. Our guarantee is backed up by a service that sets standards in our field.

## WORLDWIDE NETWORK

Capitalising on more than 90 years of work experience, ELCO has been capable to build up loyal partnerships and today can count on reliable Partners all over the World.
Combining an instinctively global perspective with a genuinely multicultural approach ELCO today offers you skilled and experienced experts available in more than 70 Countries.

**In Europe**
3 production plants
6 commercial branches
Strong commercial presence through a network of reliable dealers and partners

**Worldwide**
2 Sales Offices in Russia and China
Distribution in over 70 Countries

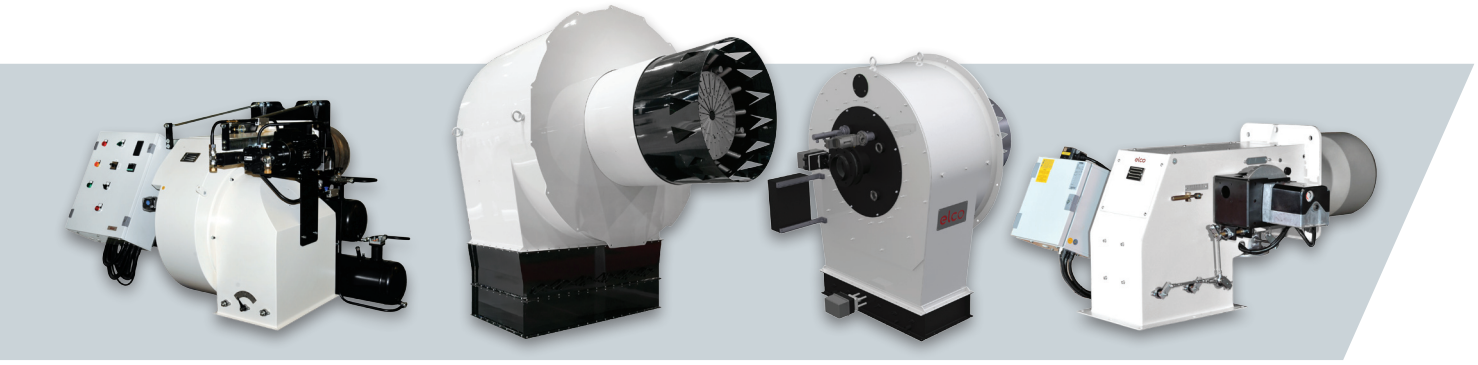

**HO/GHO-TRON**
68 - 17000 kW

**RPD**
500 - 80000 kW

**EK-DUO**
600 - 16000 kW

**D-TRON**
230 - 34000 kW

# MONOBLOCK

# EK EVO

## Monoblock burners from 250 kW to 13500 kW in gas, light oil and dual fuel

- The design of the EK EVO is the result of a successful synergy between ELCO key features and essential design. Professionals will appreciate the flexibility of a 180° orientable air inlet, the compact switch box and the easy to clean glossy paint
- All EK EVO models are fully electronically controlled and they are equipped with the exclusive ELCO man-machine interface allowing simple and effective programming operations

NATURAL

DUAL FUEL

LIGHT OIL

## All EK EVO burners feature:

- integrated switch cabinet (ISC System) with modular concept complete for an easy installation with: BT300 control box, fan motor direct start-up, enumerated connection terminals, three-phase electrical power supply (available as options: power regulator, speed controller, O2/CO regulator and BUS interface)
- innovative design allowing easy access to burner components for fast start-up and reduced maintenance time and space
- orientable air intake box
- products are in compliance with EN676 and EN267 European standards and with the following directives: 2014/35/EU Low Voltage Directive, 2014/30/UE EMC Directive, 2016/426/UE Gas Appliances Directive, 2006/42/EC Machinery Directive, 2011/65/EU RoHS2 Directive

# EK EVO _ EK EVO 8.7100 L-E

- Operation: two stage progressive/modulating electronic;
- Emission class: Low NOx class 2 (<185 mg/kWh) according to EN267

## WORKING DIAGRAM

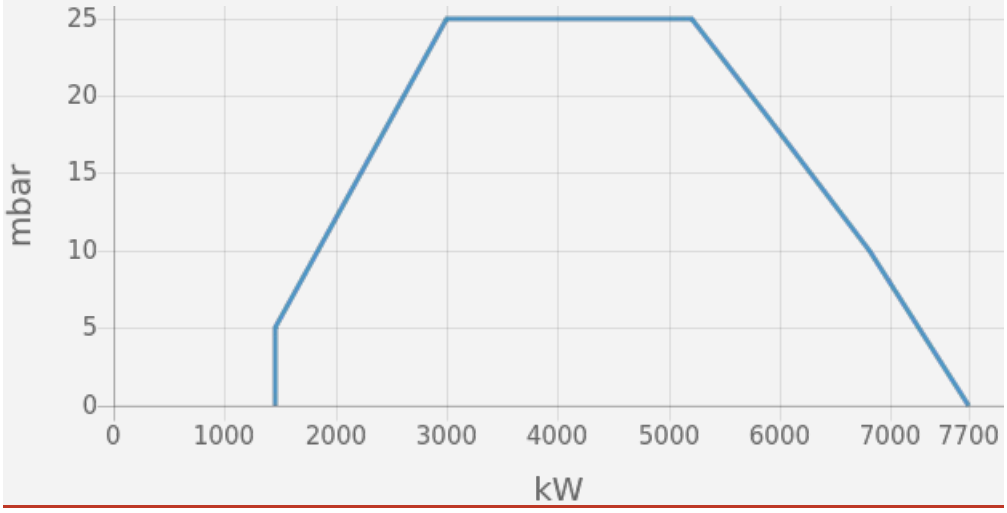


## TECHNICAL DATA

| | |
|---|---|
| Minimum power output (kW) | 1450 |
| Maximum power output (kW) | 7700 |
| Fan motor (kW) | 15 |
| Protection level | IP41 |

## OTHER AVAILABLE CONFIGURATIONS

- Permanent ventilation;
- 60 Hz version;
- Remote display;
- Hinge flange

## OVERALL DIMENSIONS

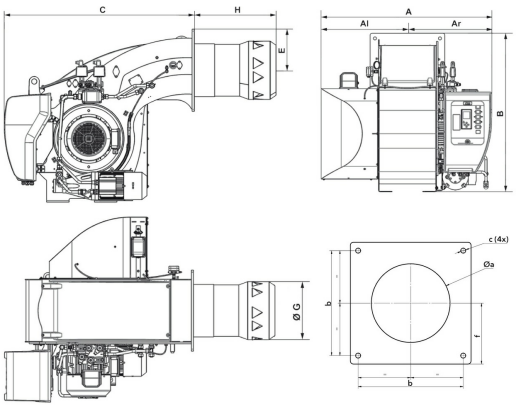

| Al | Ar | A | B | C | E | G | H | Øa | b | c | f |
|---|---|---|---|---|---|---|---|---|---|---|---|
| 670 | 655 | 1325 | 1231 | 1351 | 293 | 415 | KN: 583 / KM: 723 / KL: 863 | 445-480 | 505 | M20 | 293 |

## Subsidiaries ELCO


**GERMANY**

ELCO GmbH

Dreieichstraße 10
Mörfelden-Walldorf
Tel.: +49 (0) 6105 287-287
Fax: +49 (0) 6105 287-199

**NETHERLANDS**

Elco Burners B.V.

Meerpaalweg, 1
1332 BB Almere
P.O. box 30048
1303 AA Almere
Tel. +31 088 69 573 11
Fax +31 088 69 573 90

**FRANCE**

14, rue du Saule Trapu
Parc d'activité du Moulin
91882 Massy
Tel. +33 01 60 13 64 64
Fax +33 01 60 13 64 65

**SWITZERLAND**

Elcotherm AG

Sarganserstrasse 100
7324 Vilters
Tel. +41 (0)81 725 25 25
Fax +41 (0)81 723 13 59

**AUSTRIA**

ELCO Austria GmbH

Aredstraße 16 - 18
2544 Leobersdorf
Tel. +43 (0)2256 639 99 32
Fax +43 (0)2256 644 11

**ITALY**

Via Roma, 64
31023 Resana (TV)
Tel. +39 0423 719500
Fax +39 0423 719580

**UK & IRELAND**

Ariston Thermo UK Ltd

Suite 3, The Crown House
Blackpole East, Blackpole Road,
Worcester WR3 8SG
Tel. +44 01905 788010
Fax +44 01905 788011

**RUSSIA**

Ariston Thermo RUS

Eniseyskaya str. 1, bld 1,
Office Center "LIRA" #438
129344 Moscow
Tel. +7 495 213 0300 #5700
Fax +7 495 213 0302

**CHINA**

Ariston Thermo (China) Co., Ltd.

F/15, V-Capital Bldg
No. 333 Xian Xia Road
200336 Shanghai
Tel. +86 21 6039 8691
Fax +86 21 6039 8620


Contact us to know more
about our products and solutions

**www.elco-burners.com**
**contact@elco-burners.com**