C7076A,D Adjustable Sensitivity Ultraviolet Flame Detectors

PRODUCT DATA

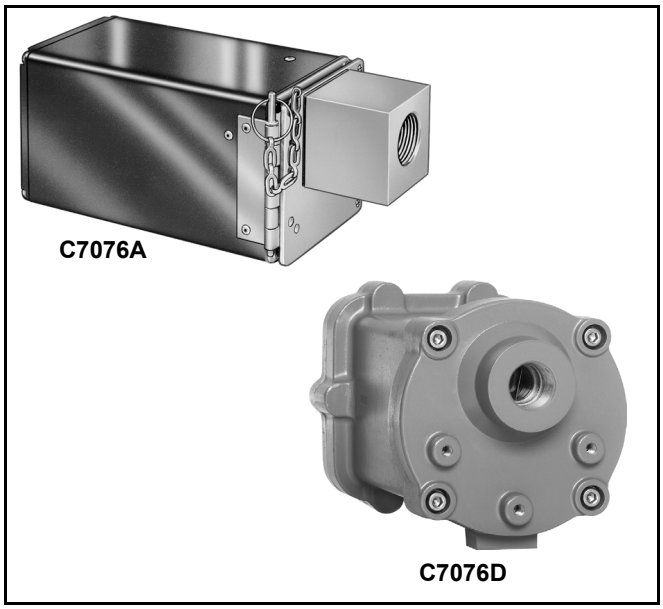

APPLICATION

The C7076 Adjustable Sensitivity Ultraviolet Flame Detector is a solid-state, adjustable sensitivity, device for sensing the ultraviolet radiation emanating from gas, oil and pulverized coal flames. It is designed for burner management and flame safety systems which require optimum sensitivity and/or flame discrimination.

The C7076A and C7076D are identical except for their housings. The C7076A is designed for standard installations The explosion-proof housing used with the C7076D meets the requirements for Division I, Class I, Groups C and D; and Class II, Groups E, F, and G of the National Electrical Code (NFPA70).

The C7076 features two sensitivity adjustments, each with a 400:1 dynamic range, and an integral flame signal meter jack to facilitate precise sighting.

The flame detector is designed for use with Dynamic Self-Check Ultraviolet Amplifiers R7476A and R7886 to provide a closed-loop, self-checking circuit which insures the integrity of both amplifier and flame detector. Improper response to simulated flame loss results in a safety shutdown and/or alarm.

FEATURES

- **High level output permits long distance transmission without special wiring.**
- **Solid state circuitry assures long life and stable sensitivity over wide ranges of temperature and voltage.**
- **Available in two versions:**
  - **— C7076A for use in standard installations.**
  - **— C7076D for use in installations requiring explosion-proof packaging.**

Contents

Application 1
Features 1
Specifications 2
Ordering Information 2
Installation 7
Wiring 8
Troubleshooting 16
Service 18

® U.S. Registered Trademark
Copyright © 2002 Honeywell • All Rights Reserved

95-8269—1

ПРОМЭЛЕКТРОНИКА / sales@prom-elec.com

SPECIFICATIONS

Models:
C7076A—Adjustable sensitivity flame detector packaged in standard housing. Used with R7476A and R7886 Dynamic Self-Check Ultraviolet Amplifiers.

C7076D—Adjustable sensitivity flame detector packaged in explosion-proof housing. Used with R7476A and R7886 Dynamic Self-Check Ultraviolet Amplifiers.

Electrical Ratings: See Table 1.

Table 1. Electrical Ratings.

Line Voltage (+10%, -15%)	Frequency (Hz)	Shutter Voltage[a]	Maximum Power Consumption[b]	
			Watts	VA
100	50/60	100	7	14
120	60	120	7	14
200	50/60	120	7	14
220/240	50/60	120	7	14
117[c]	50	117	7	14

[a] Supplied by the appropriate flame safeguard control operating at the designated line voltage.
[b] Does not include shutter power, which is supplied by the flame safeguard control.
[c] For applications in South Africa.

Temperature Ratings:
Maximum Aspirator Temperature (C7076A only): 225°F (107°C).
Ambient Operating Temperatures:
C7076A: -40°F to +160°F (-40°C to +71°C).

NOTE: Derate ambient temperature 1°F for every 13°F of aspirator temperature over 160°F.

C7076D: -40°F to +160°F (-40°C to +71°C).
Storage Temperature Range:
-60°F to +185°F (-51°C to +85°C).

Sensitivity Selection:
Remote Sensitivity Selection: External switch can be wired to select the setting sensitivity control, either A or B.
External Selector Switch: Must rated for switching 20 mA at 48 Vdc.

Sensitivity Adjustment:
Range: 400 to 1.
Sensitivity Controls: Two, labeled **A** and **B**, on plug-in electronics chassis. Each can be set independently and locked to prevent drift due to vibration.

Flame Signal Amplifiers:
R7476A or R7886 Dynamic Self-Check Ultraviolet Amplifier; order separately.

Flame Signal:
Measured at flame current meter jack on C7076: 1.4 to 5.5 mA nominal.
Measured at flame current meter jack on R7476A amplifier: 2.5 to 5.5 mA nominal.
Measured at flame voltage meter jack on R7886 amplifier: 0.0 to 5.0 Vdc.

Shutter Frequency:
R7476A: 1.25 Hz nominal. Interrupts the line-of-sight of the detector about 75 times per minute to provide self-checking.
R7886: One test every 5 seconds to provide self-checking.

Pressure:
C7076A quartz viewing lens: 20 psig (138 kPa) maximum.
C7076D quartz viewing lens: 142 psig (981 kPa) maximum.

ORDERING INFORMATION

When purchasing replacement and modernization products from your TRADELINE® wholesaler or distributor, refer to the TRADELINE® Catalog or price sheets for complete ordering number.

If you have additional questions, need further information, or would like to comment on our products or services, please write or phone:

1. Your local Home and Building Control Sales Office (check white pages of your phone directory).
2. Home and Building Control Customer Relations
   Honeywell, 1885 Douglas Drive North
   Minneapolis, Minnesota 55422-4386

In Canada—Honeywell Limited/Honeywell Limitée, 35 Dynamic Drive, Scarborough, Ontario M1V 4Z9.
International Sales and Service Offices in all principal cities of the world. Manufacturing in Australia, Canada, Finland, France, Germany, Japan, Mexico, Netherlands, Spain, Taiwan, United Kingdom, U.S.A.

Interchangeability:
Models C7076A and C7076D are not interchangeable with other flame detector models; they must be used with either the R7476A or R7886 Dynamic Self-Check Ultraviolet Amplifier.

Wiring Connections:
C7076A: Terminal block in front compartment of housing; wire-clamp type, removable screws (terminal lugs can be used).
Conduit fitting: 7/8 in. opening in housing to accommodate 1/2 inch flexible conduit; fitting must be water-tight to meet NEMA 4 standards.
C7076D: Terminal block in front compartment of housing; wire-clamp type, removable screws (terminal lugs can be used).
Conduit fitting: 1/2 in. NPT tapped opening in bottom of housing to accommodate conduit.

Plug-in Electronics Chassis:
Field-replaceable; plugs into octal socket in housing. Contains ultraviolet sensing tube, shutter assembly, power supply, solid state circuitry, sensitivity adjustment controls and flame current meter jack. Keyed to housing to ensure proper orientation.

Air Flow Requirements (C7076A only):
Purge Air: 0.7 SCFM (3.3 ml/sec) is required to maintain 4 in. (102 mm) of differential pressure from the aspirator inlet to the combustion chamber. An air flow of 3 SCFM (14 ml/sec) is recommended.
Seal-off Air: 5 psig (34.5 kPa) maximum combustion chamber pressure.

Housing:
C7076A: Meets NEMA 4 standards (water-tight and dust-tight, indoor and and outdoor).
Construction: Aluminum and cadmium-plated steel.
Color: Light blue.
Front compartment contains terminal block; rear compartment contains electronic chassis.
C7076D: Meets NEMA 7 requirements (explosion-proof).
Construction: Cast aluminum alloy.
Color: Light blue.
Front compartment contains terminal block; rear compartment contains electronic chassis.

Mounting:
C7076A: Aspirator has 1-in. NPT tapping for mounting onto sight pipe, and 3/8 in. NPT tapping for connecting to the air supply.
Detector mounts on aspirator by means of a removable piano-type hinge.
C7076D: Detector has 1-in. NPT tapping for mounting onto sight pipe and two 5/16-18 UNC tapped holes for attaching a bracket for additional security.
For allowable mounting positions, see Fig. 1.

Weight:
C7076A: 6.6 lb (3 kg).
C7076D: 17.6 lb (8 kg).

Dimensions: See Fig. 2.

Accessories:
118367A Swivel Mount.
W136A Test Meter (includes 117053 meter connector plug).
117053 Meter Connector Plug (for older W136A models).

Replacement Parts:
C7076A:
191002B Plug-in Electronics Chassis (without UV sensing tube).
190971E Coil and Shutter Assembly (for all models except 100V model).
190971F Coil and Shutter Assembly (for 100V model).
190998A Aspirator Assembly.
191205 Pin and Chain.
191055A Cover Assembly for 120 Vac models.
191055B Cover Assembly for 220/240 models.
191203-767 Hinge.
191053 Ultraviolet Sensing Tube.
191050 Viewing Lens.
190999 grommet, silicone rubber for viewing lens.
191054 Gasket, silicone-rubber seal for front and rear cover plates.
C7076D:
191002R Plug-in Electronics Chassis (without UV sensing tube).
190971E Coil and Shutter Assembly (for all models except 100V model).
190971F Coil and Shutter Assembly (for 100V model).
191053 Ultraviolet Sensing Tube.
191050 Viewing Lens.
24400152-001 Lens Kit (consists of quartz window gasket and gasket seal).

Approvals:
C7076A:
Underwriters Laboratories Inc. Listed (120V models only): File No. MP268, Guide No. MCCZ.
Canadian Standards Association (CSA) Certified (120V models only): File No. LR1620.
Factory Mutual Approved: Report No. FM26980.
C7076D:
Underwriters Laboratories Inc. Listed: File No. E34649, Guide No. ZTSZ.
Industrial Risk Insurers Approvable.

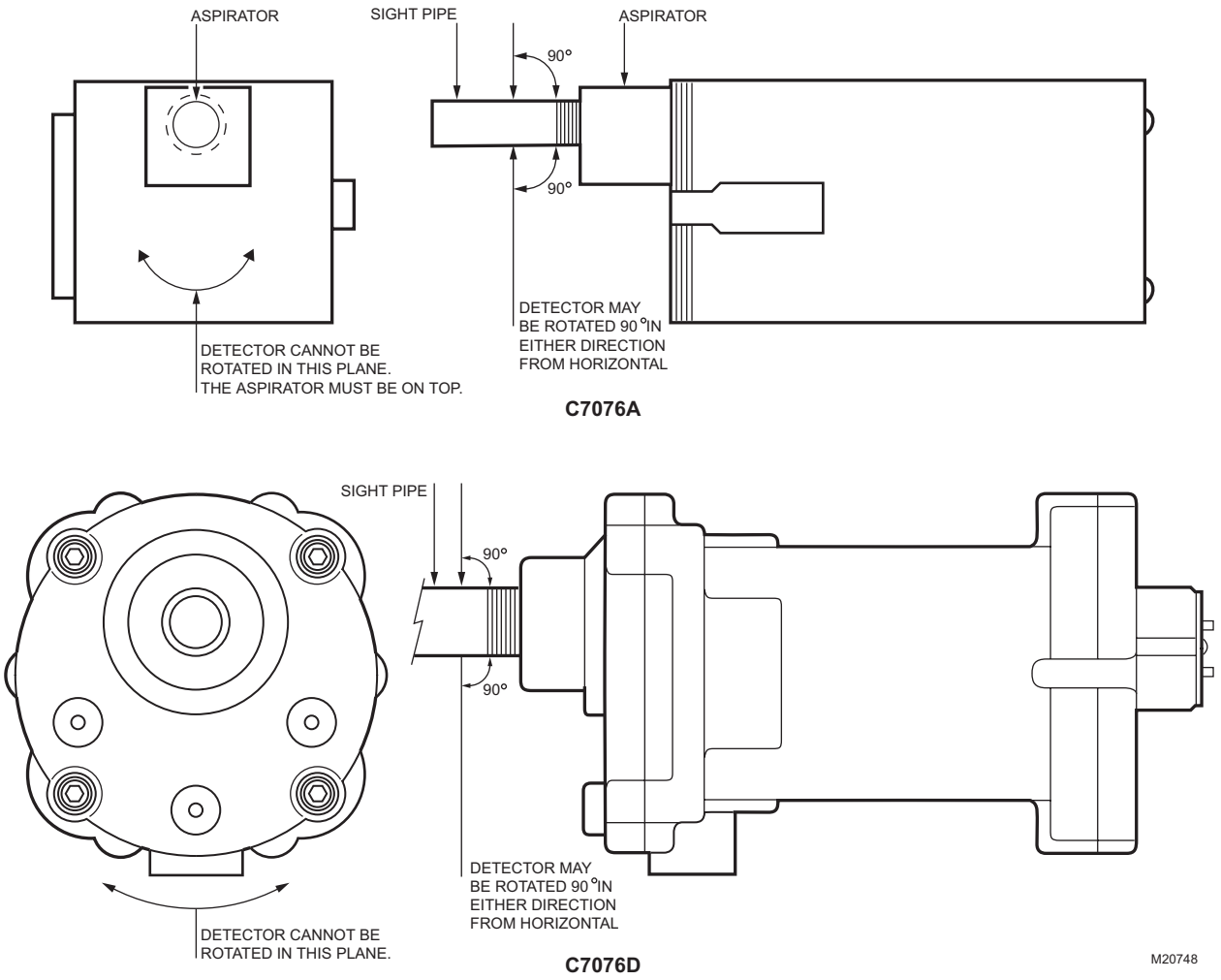

Fig. 1. C7076 allowable mounting positions.

INSTALLATION

Planning the Installation

Proper flame detector application is the basis of a safe and reliable flame safeguard installation. Refer to the burner manufacturer instructions as well as to those included here. Follow all instructions carefully.

Determine the Location

Before beginning the actual installation, estimate the best location for mounting the detector based upon the following factors:

Temperature

Install the flame detector where the surrounding temperature will remain within the specified ambient operating temperature ratings.

For the C7076A, to keep the detector temperature within specifications, the aspirator temperature must not exceed 225°F (107°C). If the aspirator temperature will exceed temperature ratings, the introduction of cooling-purging air will be required.

Vibration

Do not install the detector where it could be subjected to excessive vibration; it shortens the life of the electronic components. Vibrations with a magnitude greater than 1g will require an antivibration mount to cushion the detector.

Clearance

Make sure there will be enough room to swing out the detector for servicing. Refer to Fig. 2 as applicable.

Radiation Sources Other Than Flame

Examples of radiation sources, other than flame, which could actuate the detector system include:

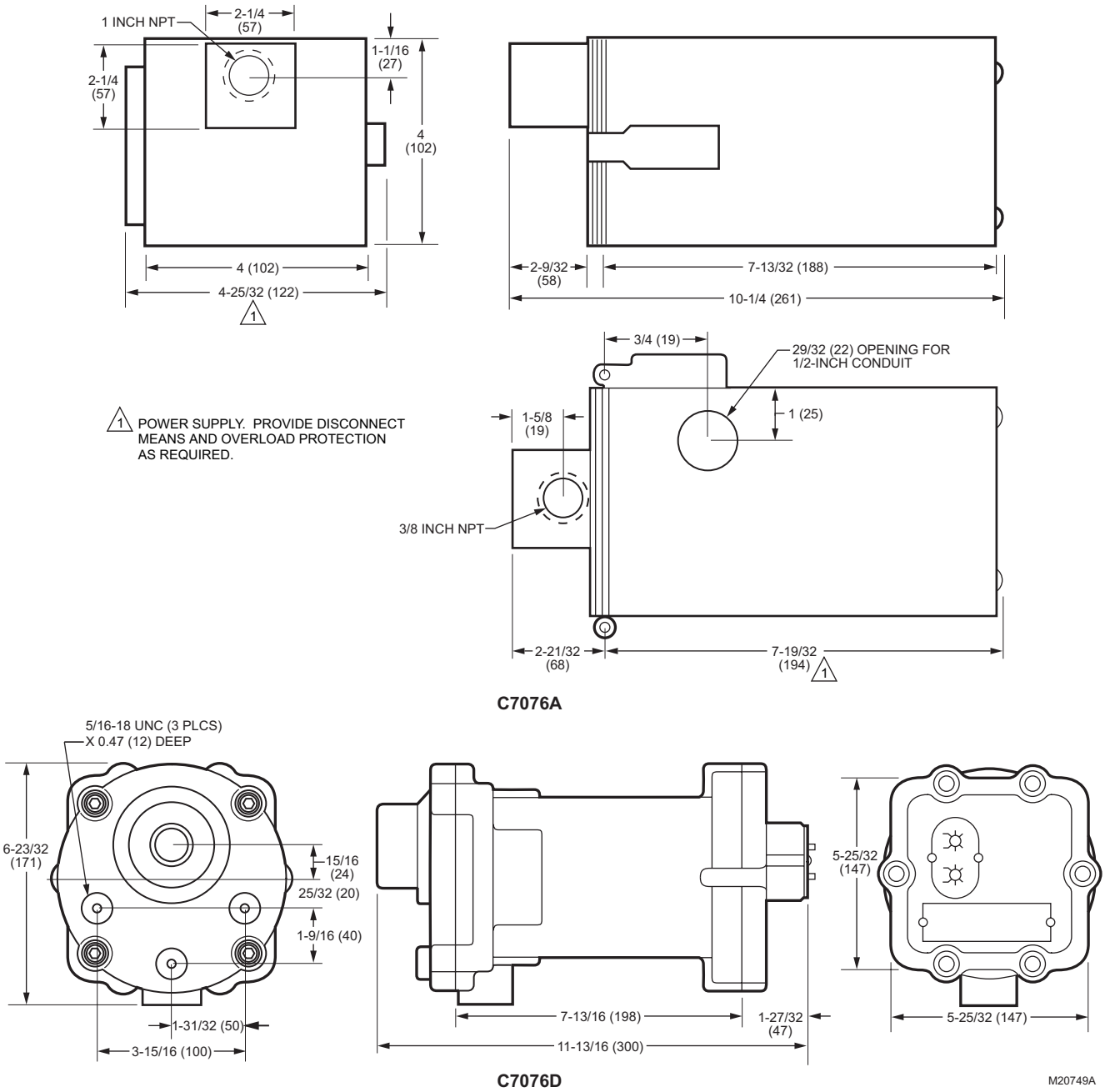

Fig. 2. C7076 dimensions in in. (mm).

1. Ultraviolet sources:
   a. Radiant surfaces above 2200°F (1200°C).
   b. Sparks from ignition transformers and welding arcs.
   c. Gas lasers.
   d. Sun lamps.
   e. Germicidal lamps.
   f. Incandescent lamps held close to the sensing tube (filament above 2200°F [1200°C]).
2. Gamma ray and X-Ray sources:
   a. Diffraction analyzers.
   b. Electron microscopes.
   c. Radiographic x-ray machines.
   d. High voltage vacuum switches.
   e. High voltage condensers.
   f. Radioisotopes.

Except under very unusual circumstances, none of these sources, except a radiant surface or ignition spark, would be present in or near the combustion chamber.

The detector may respond to a radiant surface at a temperature above 2200°F (1200°C) if both of these conditions are present:

- The detector sensitivity control is set at (or near) maximum, and

- the surface represents a significant percentage of the detector field of view.

If the temperature or a radiant surface causes the flame relay (in the flame safeguard control) to pull in, re-aim the sight pipe so the detector views a cooler area, or decreases the sensitivity of the detector.

Ignition spark is a rich source of ultraviolet radiation. When installing the detector, make sure it does not respond to ignition spark.

Single Burner Requirements

The detector must have an unobstructed view of the flame it is supervising under all firing conditions. This implies a proper sighting angle and the minimization of screening effects.

Sighting Angle

The first 30 percent of a flame (the root) radiates the most intense ultraviolet energy. Low angle sighting permits the detector to view a greater depth of the flame root, thus reducing the effects of irregularities in the flame pattern. The best sighting angle is nearly parallel to the axis of the flame, as shown in Fig. 3.

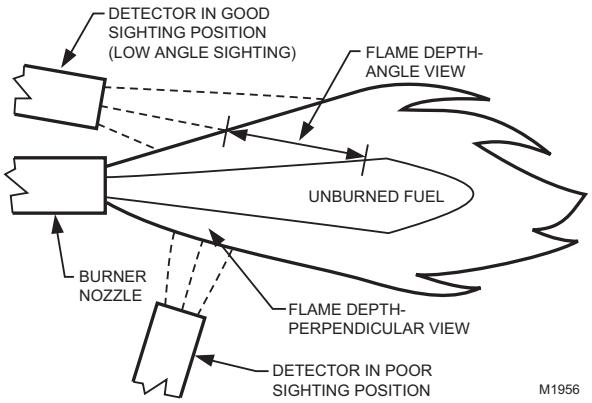

Fig. 3. Detector sighting angle.

NOTE: When possible, it is desirable to tilt the detector and sight pipe downward to prevent the buildup of soot in the pipe or on the viewing lens.

In most installations, the detector will need to respond to the pilot flame alone, then to the pilot flame and main burner flame together, and finally to the main burner flame alone. The detector must meet all sighting requirements which apply.

1. Pilot flame alone—the smallest pilot flame that can be detected must be capable of reliably lighting the main burner.
2. Pilot and main burner flame together—the detector must sight the junction of both flames.
3. Main burner flame alone—the detector must sight the most stable part of the flame for all firing rates.

Screening Effects

Smoke, fuel mist, dirt and dust are masking agents that absorb ultraviolet radiation from the flame. They create a screen that reduces the amount of ultraviolet radiation reaching the detector and may cause flame signal deterioration resulting in a shutdown. The adverse affects of screening may be minimized by proper burner adjustment, increasing the detector viewing area (shorten sight pipe and/or increase its diameter), and optimizing detector sensitivity.

Multiburner-Multifuel Requirements

In addition to meeting the requirements for a single burner, a multiburner installation also requires flame discrimination. Flame discrimination may be defined as the location of all flame detectors such that each detector responds only to the flame(s) produced by the burner it is supervising.

MULTIBURNER REQUIREMENTS

In multiple burner systems, not every detector can be positioned so that its line of sight does not intercept flames from other burners. This situation occurs in front-fired boiler furnaces having more than one row of burners, or in multilevel opposed-fired furnaces where the burners face each other.

When planning such an installation, locate each flame detector so that it has the best possible view of the first 30 percent closest to the burner nozzle (the flame root) it is supervising, and the worst possible view of all other flames.

Fig. 4 illustrates a critical detector application problem that requires flame discrimination. Flame discrimination is accomplished for Detector A by repositioning it until the flame relay (in the flame safeguard control) does not respond to Flame B. Note that Detector A is aimed at the first 30 percent of Flame A where the ultraviolet radiation is most intense. It sights the tip of Flame B, but it is not aimed at the first 30 percent of Flame B where ultraviolet radiation is intense. Detector A is repositioned to assure maximum response to Flame A while rejecting Flame B. Similarly, Detector B is positioned to assure maximum response to Flame B while rejecting Flame A.

If the sensitivity control on a detector is set at its minimum position and flame discrimination cannot be achieved, insert an orifice plate in the sight pipe. An orifice of the proper diameter will reduce the ultraviolet radiation reaching the detector so that the sensitivity can be adjusted to effect flame discrimination.

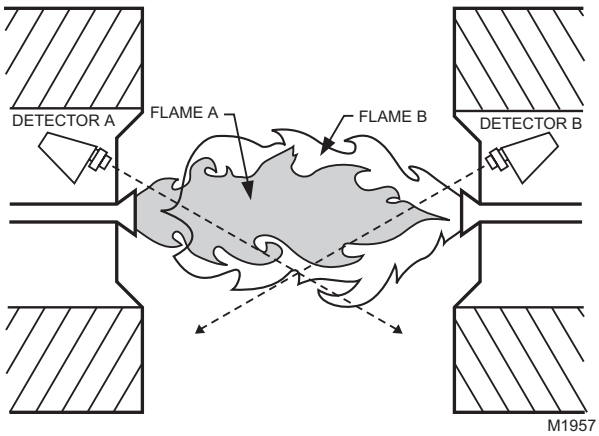

Fig. 4. Example of flame discrimination problem (opposed-fired burners).

MULTIFUEL REQUIREMENTS

Detectors supervising burners that alternately fire more than one fuel may require a different sensitivity level for each fuel. For example, a higher sensitivity is required to reliably sense pulverized coal or No. 6 fuel oil in contrast to natural gas or to No. 2 fuel oil. Reliable flame sensing and flame discrimination may not be maintained simultaneously (without changing the sensitivity setting) when alternating between two fuels.

The C7076 has two integral sensitivity adjustments that can be remotely and automatically selected. The two sensitivity adjustments can be chosen by means of the fuel selector switch (refer to Remote Sensitivity Selection in the Installation section). The sensitivity adjustments should be made for both fuels as described in the section on multiburner requirements, using one adjustment pot for each fuel.

Parallel Flame Detectors

Two C7076 detectors can be connected in parallel to the same flame signal amplifier and still provide independent sensitivity adjustment. This capability is particularly useful for multiburner, multifuel applications.

Shifting flame patterns, commonly encountered on burners with wide turndown ratios, may require parallel detectors to prove the flame at the highest and lowest firing rates. In this case, one detector supervises the pilot (interrupted) and both detectors supervise supervise the main burner flame. During the main burner run period, either detector is capable of maintaining system operation.

In addition to assuring more reliable flame detection, parallel detectors facilitate maintenance during burner operation. Each detector can be removed in turn without shutting down the supervised burner. However, a flame simulating failure occurring in the flame signal amplifier or in either detector will cause a shutdown.

Redundant Flame Detection System

Two C7076 detectors connected to two flame signal amplifiers wired in parallel comprise a redundant flame detection system. In addition to the features of parallel flame detectors, a redundant system increases reliability and is therefore recommended for critical burner applications. A flame failure, flame signal loss, or flame simulating failure occurring in either detector subsystem will cause an alarm (not a shutdown) allowing corrective action to avert a shutdown.

INSTALLATION

⚠ WARNING

Electrical Shock Hazard.
Can cause serious injury, death or equipment damage.
Disconnect power supply before beginning installation. More than one disconnect may be necessary.

When Installing this Product…

1. Read these instructions carefully. Failure to follow them could damage the product or cause a hazardous condition.
2. Check the ratings given in the instructions and on the product to make sure the product is suitable for your application.
3. Installer must be a trained, experienced flame safeguard service technician.
4. All wiring must comply with applicable local electrical codes, ordinances and regulations.
5. All wiring must be NEC Class 1 (line voltage).
6. Voltage and frequency of the power supply connected to this detector must agree with the values marked on the detector.
7. If an air supply is connected to the aspirator on the C7076A, its pressure must equal or exceed that required to seal off the detector from the combustion chamber.
8. On multiburner installations, each detector must respond only to the flame(s) produced by the burner it is supervising.
9. Do not connect more than two detectors in parallel to a single R7476A or R7886 Dynamic Self-Check Ultraviolet Amplifier.
10. Perform all required adjustments and checkout tests after installation is complete.

Selecting and Installing Sight Pipe

After you have determined the approximate location and sighting angle, select the sight pipe. A black iron pipe is recommended to provide reliable flame sensing. Stainless steel and galvanized pipes have bright surfaces that initially transmit ultraviolet radiation very well. However, their ability to transmit ultraviolet radiation will decay when the bright surfaces become dull with age or contamination, and flame detection will become less reliable with time.

The aspirator on the faceplate of the C7076A, and the faceplate on the C7076D, are tapped for a 1-inch NPT threaded pipe. A larger pipe may be necessary to obtain proper performance; an diameter other than 1 inch will require a reducer coupling. The geometry of the sight pipe affects the performance of the detector. If the flame signal is too small, reduce the length or increase the diameter of the pipe to increase the field of view of the detector. If a sight pipe longer than 1 foot is required, use a 2-inch diameter pipe with the reducer as close to the detector as possible.

NOTE: Sight pipe couplings cannot be used with C7076D due to the need to safeguard the integrity of the explosion-proof quality of this model. The size of the sight pipe for the C7076D, therefore, is restricted to 1-inch diameter.

Cut a hole of the proper diameter for the sight pipe in the burner front or windbox at the selected location. The hole should be at least 2 inches in diameter to allow adjustment of the sighting angle. If register vanes interfere with the desired line of sight, trim the interfering vane(s) to assure an unobstructed view of the flame.

Cut the pipe to the desired length. Thread one end of the pipe to fit the desired mating component; i.e., reducer coupling, aspirator on the faceplate of the C7076A aspirator; or

faceplate on the C7076D Detector. Insert the other end of the pipe into the mounting hole, align it to the desired sighting angle, and tack weld it in position.

NOTE: When initially mounting the pipe, tack weld it in place to allow further sighting adjustments. Make sure the tack weld will support the weight of the detector when it is installed.

NOTE: When installing a C7076A Detector, a Honeywell 118367A Swivel Mount is recommended to facilitate sighting the flame properly. For installation instructions for the Swivel Mount, see form 60-0361.

Installing the C7076A Detector

Mounting the Aspirator

The aspirator on the faceplate of the C7076A Detector screws directly onto the 1-inch NPT threaded pipe. Remove the aspirator from the C7076A Detector by removing the hinge pin. Use an adjustable wrench to tighten the aspirator onto the pipe. For alternate mounting methods and further information refer to Fig. 5.

Mounting the Detector

Mount the detector on the faceplate by placing the detector on its hinge and re-inserting the hinge pin. Install 1/2 inch flexible conduit to the detector as follows:

Loosen the four captive screws in the front coverplate (with the viewing lens) and remove the plate.

Install a flexible conduit fitting in the opening in the bottom of the detector (Fig. 7). To meet NEMA 4 standards, use watertight conduit and a watertight fitting (such as an Appleton ST50 Liquid-Tight® Connector with an STG-50 Neoprene O-ring and Steel Gasket Assembly). See Table 2 for other applicable connectors.

Table 2. Applicable Watertight Connectors.

Manufacturer	Coupling No.	O-Ring No.
T&B	5232	5262
Efcor	11-50	LTG-1
Raco	3402	2452
Steel City	LT-101	LR-531
Crouse Hines	LT-50	SG-1

Connecting Air Supply (Optional)

Use a flexible air supply line which will allow repositioning of the sight pipe until the permanent detector position has been verified.

The aspirator air inlet can be plugged, left open, or connected to a clean (oil/moisture-free) air supply. Use a 3/8 in. NPT connector if aspirator air is used (see Fig. 5). The aspirator allows air to flow through the sight pipe into the combustion chamber to cool, clean and seal off the sight pipe. The airflow eliminates the need for frequent lens cleaning. See Fig. 8 for purge air requirements.

Seal off of the sight pipe prevents hot gases from escaping from a positive pressure combustion chamber when the detector is swung open on its hinge for maintenance. Refer to Fig. 9 for the minimum inlet pressure or air flow required to seal off a sight pipe against a positive combustion chamber pressure.

Fig. 10 shows a method of supplying a constant airflow to purge the sight pipe, while also providing enough pressure to seal off the sight pipe when needed.

Mounting the Faceplate

The faceplate of the C7076D Detector screws directly onto the 1-inch NPT threaded pipe (see Fig. 5). Screw the faceplate onto the pipe; hand-tighten in place, making certain that the four mounting holes in the faceplate are properly aligned to allow the detector to be in the desired position when secured to the faceplate.

Mounting the Detector

Mount the detector on the faceplate and fasten in place using the four mounting screws supplied for this purpose. Do not tighten the screws at this time, because the detector must still be wired.

Obtain a piece of conduit that is not longer than 18 inches in length and has 1/2-inch NPT threads at both ends. Screw this piece of conduit into the threaded opening in the bottom of the detector housing (see fig. 11). Install an approved seal box on the other end of the piece of conduit and then complete the conduit installation as required.

WIRING

⚠ WARNING

Electrical Shock Hazard.
Can cause serious injury, death or property damage.
Disconnect all power before beginning wiring. More than one disconnect may be involved.

1. All wiring must comply with applicable local electrical codes, ordinances and regulations. Use NEC Class 1 wiring.

NOTE: The detector has color-coded and labeled, plastic-insulated no. 18 leadwires, 8 ft (2.4 m) long, rated for 221°F (105°C).

2. Keep the flame signal leadwires as short as possible from the flame detector to the terminal strip or wiring subbase. Capacitance increases with wire length, reducing the signal strength. the maximum permissible leadwire length depends on the type of leadwire and the conduit type and diameter. The ultimate limiting factor in flame signal leadwire length is the signal current or voltage at the flame safeguard device. See Table 1.

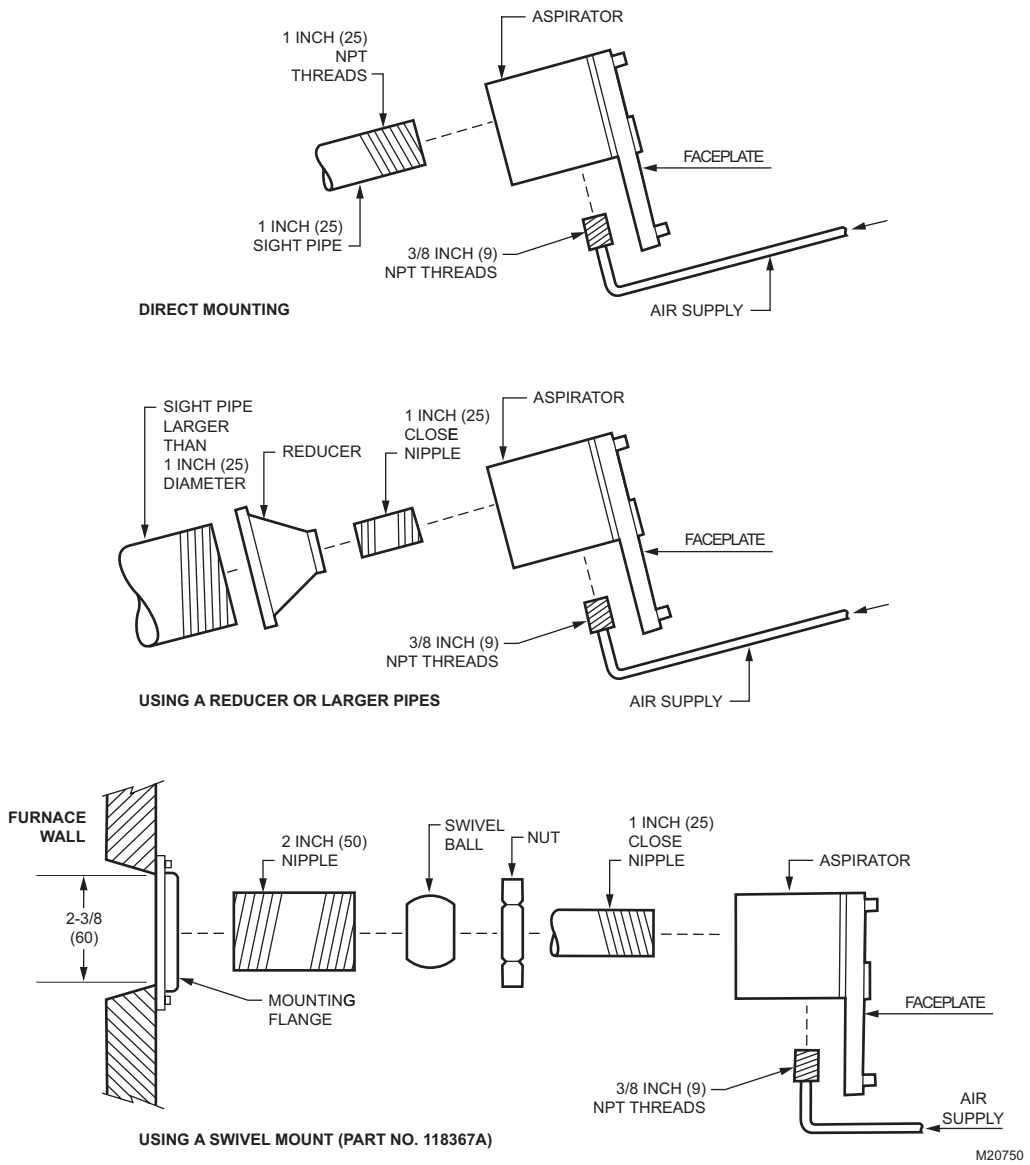

Fig. 5. Installing the sight pipe for the C7076A Detector.

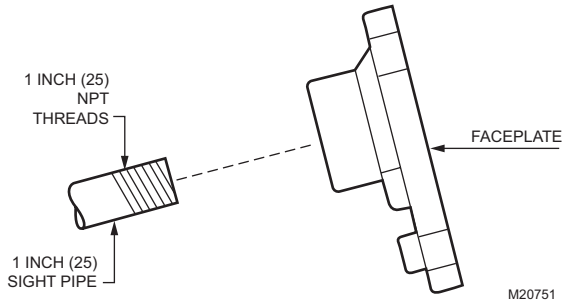

Fig. 6. Installing the sight pipe for the C7076D Detector.

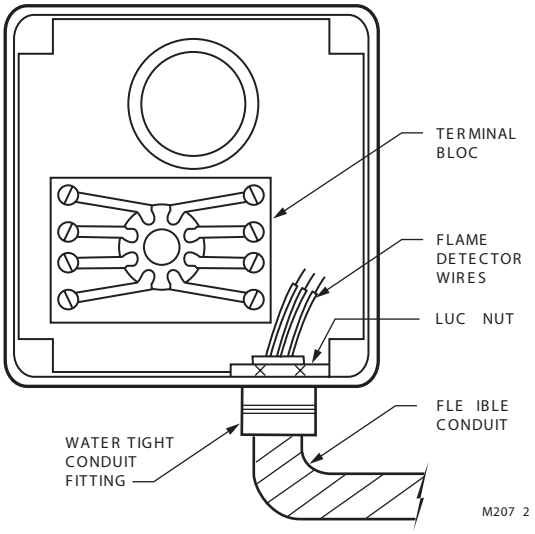

Fig. 7. Connecting the watertight flexible conduit.

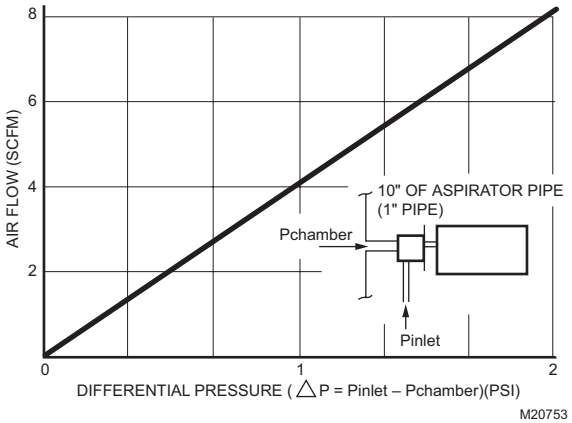

Fig. 8. C7076A purge air requirements.

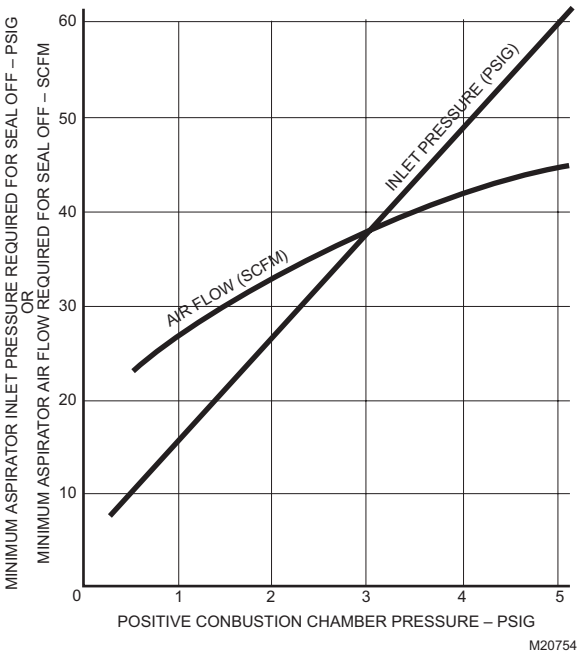

Fig. 9. Minimum inlet pressure or airflow.

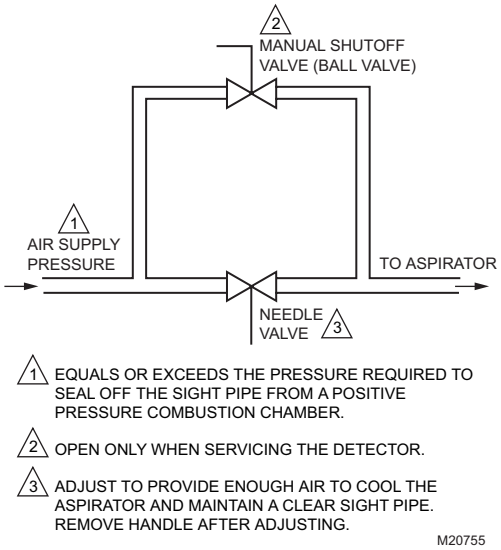

Fig. 10. Supplying a constant airflow for purge.

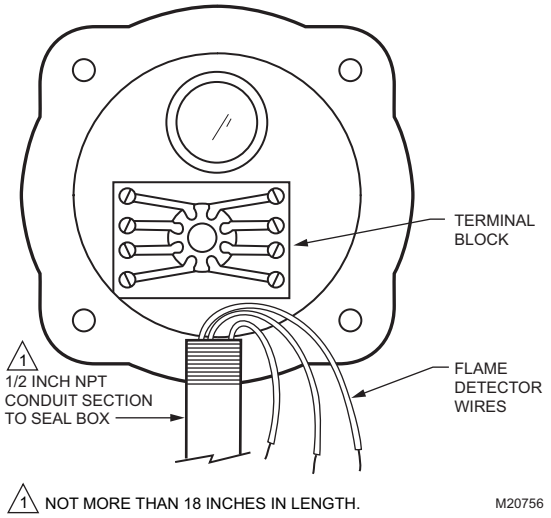

Fig. 11. Mounting the C7076D Detector.

3. Detector leadwires can be spliced for longer leadwire runs observing the following considerations:
   a. Make required splices in a junction box.
   b. Use moisture-resistant no. 14 wire suitable for at least 167°F (75°C).
   c. For High Temperature Installations, use Honeywell specification no. 32004766-003 or equivalent for the F leadwire. This wire is rated up to 480°F (250°C) for continuous duty. It is tested for operation up to 20,000 volts and for breakdown up to 35,000 volts. For the other leadwires, use moisture-resistant no. 14 wire selected for a temperature rating above the maximum operating temperature.
   d. F and G wires (blue and yellow) must be run in their own conduit, independent of other power-carrying leadwires. More than one scanner F and G wires can be run in the same conduit.
   e. A shielded twisted-pair wire may be substituted for using conduit for routing the F leadwire (blue). Be advised of the capacitance per foot of shielded wire effectively reduces the flame signal at the flame safeguard device. Be sure to ground the shield to the G terminal at the flame safeguard wiring subbase.
   f. The detector power and shutter wires need to be run in their own conduit, as well, avoiding other electrical noise-carrying wiring.
   g. The scanner wires should remain separated 2 in. (51 mm) minimum from other line voltage wires in the main control panel to the flame safeguard device.
4. Installation considerations to be avoided that can influence detector operation and maximum leadwire length:
   a. Moisture.
   b. Ignition interference.
   c. High resistance connections and poor grounds.
   d. Leadwire capacitance.
   e. Voltage fluctuations.
   f. Induced line transients.
   g. Floating grounds—ground at some voltage above earth ground.
   h. No G wire—burner used as ground.
   i. Detector output less than maximum attainable for the installation (inadequate sighting).

Wiring Diagrams

Follow approved system wiring diagrams. Refer to Fig. 12, 13, 14, or 15 for approved system wiring diagrams.

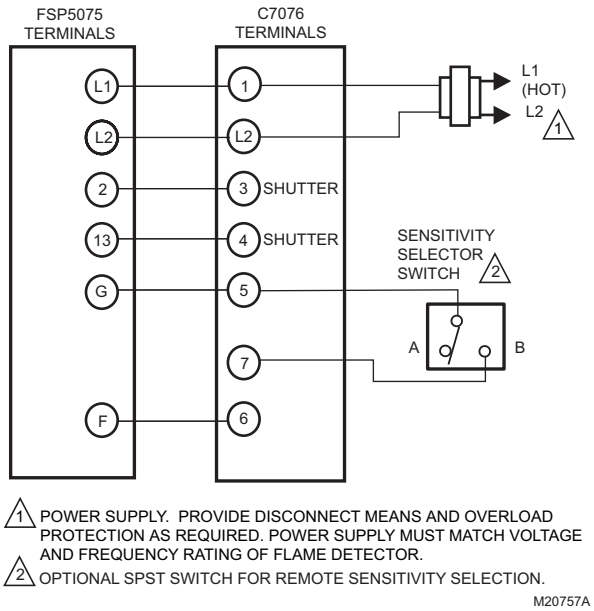

Fig. 12. Wiring C7076A,D to FSP5075.

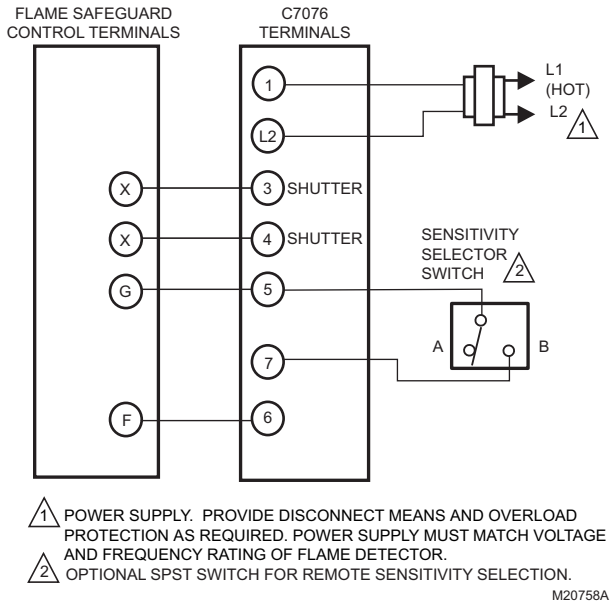

Fig. 13. Wiring C7076A,D to flame safeguard control.

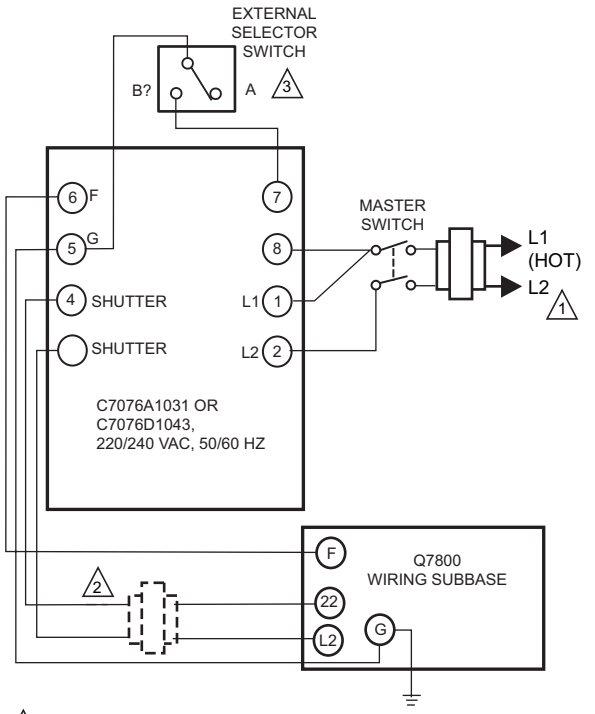

1 POWER SUPPLY. PROVIDE DISCONNECT MEANS AND OVERLOAD PROTECTION AS REQUIRED.

2 ?CAUTION: PREVENT POSSIBLE DAMAGE TO SHUTTER MECHANISM. ON EC7800 SERIES RELAY MODULE APPLICATIONS ONLY. INSTALL A 200/220/240 VAC TO 120 VAC, 10VA MINIMUM STEP-DOWN TRANSFORMER (NOT PROVIDED) TO DRIVE THE SHUTTER.

3 OPTIONAL SPST SWITCH FOR REMOTE SENSITIVITY SELECTION.

M20759A

Fig. 14. Wiring C7076A,D to EC78XX Wiring Subbase at 220/240 Vac, 50/60 Hz.

Remote System Sensitivity

For systems firing more than one fuel, each with a different level of UV emission, or whose flame patterns change with firing rate, two sensitivity adjustments are provided. An external selector switch (spst) is required to choose between the two sensitivity settings. (Refer to Sensitivity Adjustments in the Adjustments and Checkout section.) With the external selector switch open, the A sensitivity control setting will determine the sensitivity of the detector; with the switch closed, the B setting will determine the sensitivity. For automatic sensitivity selection, the switch may be incorporated into the fuel selector switch or the firing rate switch.

Connecting Detectors in Parallel

Two C7076A or two C7076D Flame Detectors with the same voltage rating can be connected in parallel to the same terminals. To avoid exceeding the rating of the shutter control circuit, do not connect more than two detectors in parallel.

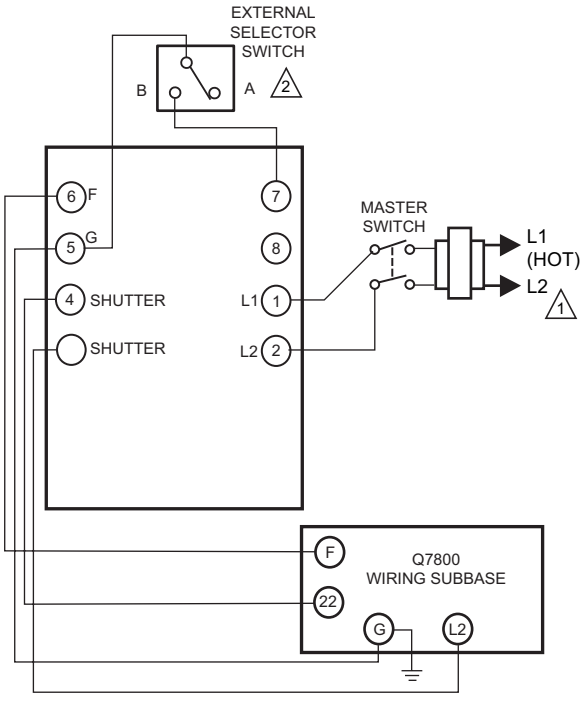

1 POWER SUPPLY. PROVIDE DISCONNECT MEANS AND OVERLOAD PROTECTION AS REQUIRED.

2 OPTIONAL SPST SWITCH FOR REMOTE SENSITIVITY SELECTION.

M20760

Fig. 15. Wiring 120 Vac C7076A,D to RM78XX wiring subbase.

Making the Connection

1. Provide access to the terminal block in the detector as follows:
   a. For the C7076A, swing open the detector from the faceplate. Loosen the four captive screws that secure the cover plate (with the viewing lens) to the detector, and remove the plate to provide access to the terminal block.
   b. For the C7076D, remove the four screws that secure the faceplate (attached to the sight pipe) to the detector. Force the faceplate from the housing far enough to allow the detector to be sufficiently reoriented on the conduit to provide access to the terminal block.
2. Run the wires from the flame safeguard control through the conduit to the C7076A or C7076D detector.
3. Connect each wire to the proper terminal on the terminal block in the detector.
4. Reassemble the detector by performing step 1a or 1b above, as applicable, in the reverse order.

Adjustments and Checkout

⚠ WARNING

Fire or Explosion Hazard.
Can cause serious injury, death or equipment damage.
Consult the burner/boiler manufacturer instructions and sequence of operation for the burner management system before initial burner lightoff.

Flame Signal Readings

The final sighting position of the C7076A or C7076D Detector may be most readily determined by using a Honeywell W136 Test Meter connected to the Flame Current meter jack on the plug-in electronics chassis. This output is the unprocessed flame signal from the detector and is intended as a diagnostic aid. Readings taken at the detector will facilitate installing the detector in the best sighting position by pinpointing the region of greatest UV intensity for a given flame.

Fig. 16 illustrates the relationship between the detector and amplifier readings. Detector saturation (the point at which an increase in UV intensity does not product a noticeable increase in flame signal strength) occurs at point A. Point B represents the point at which the amplifier is saturated while the minimum UV sensitivity required for system operation is at point C.

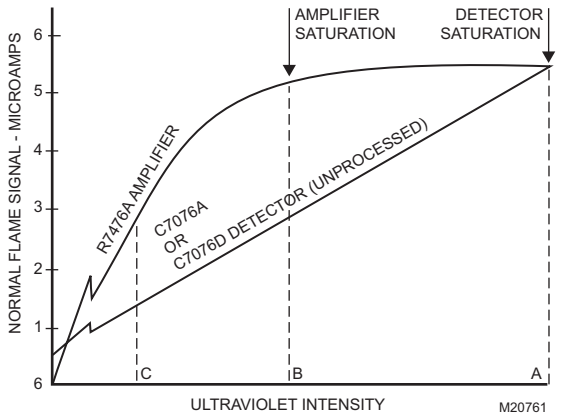

Fig. 16. Comparison of UV intensity, amplifier saturation and detector saturation.

The linearity of the detector output curve shows that a unit increase in UV intensity is accompanied by a corresponding increase in flame signal strength. This condition facilitates pinpointing the location of the most intense UV radiating from a flame. Thus, by locating the optimum flame signal with the detector, the peak UV signal, and therefore the most reliable reading, is obtained.

The minimum acceptable stable flame signal readings are:

a. C7076A and C7076D Flame Detectors: 1.4 microamperes.
b. R7476A Flame Signal Amplifier: 2.5 microamperes.
c. R7886 Flame Signal Amplifier: 1.2 Vdc.

Sensitivity Adjustments

General Considerations

1. If a single detector is required to supervise both the pilot and main burner flame, verify the flame signal for each flame individually.
2. Make sure the minimum acceptable stable flame signal (1.4 microamperes at the detector, or 2.5 microamperes at the R7476 Amplifier, or 1.2 Vdc at the R7886 Amplifier) is obtained throughout the entire turndown range of the burner.
3. Parallel detectors may be required if a single sighting angle will not provide a proper flame signal for both the pilot and main burner flames throughout the entire turndown range of the burner.

Single Burner System Using the C7076A Detector

1. Loosen the four captive screws in the rear cover plate of the C7076A and remove the plate.
2. Adjust Sensitivity Control A for maximum sensitivity.
   a. If the remote sensitivity selection feature is used, make sure the external selector switch is open for Control A adjustment.
   b. Loosen the setpoint locking nut on Sensitivity Control A.
   c. Turn the control clockwise to MAX position.
   d. Tighten the setpoint locking nut 1/4 turn past hand tight. Do not over-tighten.
3. Read the flame signal in microamperes at the Flame Current jack.
   a. Use a Honeywell W136A test meter with the selector switch at the SPL position. (If a W136 is not available, a microammeter with a 0 to 25 microampere dc range, shunted with a 50 microFarad capacitor, may be used.)
   b. A 117053 Meter Connector Plug is needed (supplied with the W136A, or it may be ordered separately). Connect the red spade tip to the red (+) meter lead and the black spade tip to the black (-) meter lead. See Fig. 17.
   c. Insert the plug into the Flame Current meter jack and allow a few seconds for the meter reading to stabilize.
   d. Read the average stable current, disregarding the peaks due to shutter operation.
4. Optimize the flame signal.
   a. Observe the flame signal while varying the line of sight of the detector.
      (1) Swivel the detector if it is mounted on a Honeywell 118367A Swivel Mount, or
      (2) Adjust the angle and/or position the sight pipe (which was only tack welded as previously instructed).
   b. Try several sighting angles until you obtain the highest and most stable meter reading possible. (If it is less than 1.4 microamperes, refer to the Troubleshooting section.)
   c. Repeat step b for both the pilot and the main burner flame. Do not sacrifice the main flame signal to obtain an unnecessarily high pilot flame signal.
5. Repeat steps 2 and 3 for Sensitivity Control B, if used. Make sure the external selector switch is closed while adjusting Control B.

6. Secure the swivel mount (if used), or tack weld the sight pipe. Do not weld the sight pipe permanently into place until you have accomplished the spark hold-in and pilot turndown tests.
7. Remove the plug from the Flame Current meter jack.
8. Replace the rear cover plate and tighten the four screws securely.

Multiburner System Using C7076A Detector (Flame Discrimination)

1. Complete steps 1 through 8 under Single Burner System above for each burner.
2. With all A sensitivity controls set to MAX position and all burners firing at full load, select one burner and proceed as follows:
   a. Shut down the chosen burner, then note the flame signal reading.
   b. Loosen the locking nut on Sensitivity Control A.
   c. Gradually reduce the sensitivity by turning Control A counterclockwise until the flame relay (in the flame safeguard control) drops out.
   d. Relight the burner and note the flame signal reading. The difference between the new reading and the initial reading in step a represents the degree of flame discrimination.
   e. Repeat the run-shutdown-dropout procedures (steps 2a-d) until the optimum setting has been achieved.
   f. Hand tighten the locking nut on Sensitivity Control A, then tighten another 1/4 turn, but do not overtighten.

NOTE: If the sensitivity control on a detector is reduced to MIN position and flame discrimination cannot be achieved, insert an orifice plate in the sight pipe. An orifice of the proper diameter will reduce the ultraviolet radiation reaching the detector so that the sensitivity can be adjusted to effect flame discrimination.

3. Repeat step 2 for Sensitivity Control A on each burner.
4. Repeat step 2 for Sensitivity Control B (if used) on each burner. Verify that Sensitivity Controls A and B on each detector are properly indexed by the system fuel selector, firing rate switch, etc.

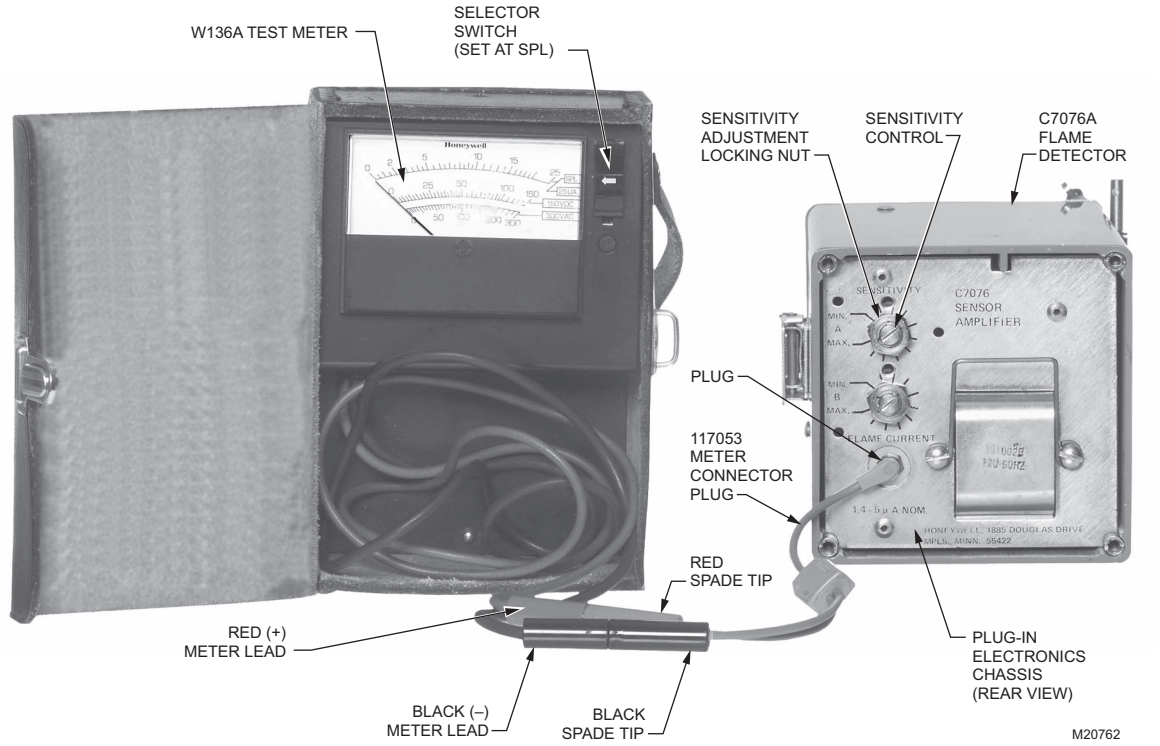

Fig. 17. Set up for Sensitivity Controls A and B adjustments, C7076A Detector.

Multifuel System

For multifuel systems, use one sensitivity control for each fuel. Follow steps 2 and 3 above for each fuel.

Single Burner System Using the C7076D Detector

⚠ WARNING

Fire or Explosion Hazard.
Can cause serious injury, death or property damage.
Make sure that the environment surrounding the C7076D is free of all explosive or hazardous conditions before exposing the interior of the detector to the atmosphere during the performance of the following adjustment procedures.

1. Loosen the six screws in the rear cover plate of the C7076D Detector and remove the plate.
2. Adjust Sensitivity Control A for maximum sensitivity.
   a. If the remote sensitivity selection feature is used, make sure the external selector switch is open for Control A adjustment.
   b. Turn Sensitivity Control A to MAX position.
3. Read the flame signal in microamperes at the Flame Current jack.
   a. Use a Honeywell W136A Test Meter with the selector switch set at the SPL position. (If a W136A is not available, a microammeter with a 0 to 25 microampere dc range, shunted with a 50 microFarad capacitor, may be used.
   b. A 117053 Meter Connector Plug is needed (supplied with the W136A or it may be ordered separately). Connect the red spade tip to the red (+) meter lead and the black spade tip to the black (-) meter lead. See Fig. 17.
   c. Insert the plug into the Flame Current meter jack and allow a few seconds for the meter reading to stabilize.
   d. Read the average stable current, disregarding the peaks due to shutter operation.
4. Optimize the flame signal.
   a. Observe the flame signal while varying the line of sight of the detector.
   b. Adjust the angle and/or position of the sight pipe (which was only tack welded as previously instructed).
   c. Try several sighting angles until you can obtain the highest and most stable meter reading possible. (If it is less than 1.4 microamperes, refer to the Troubleshooting section).
   d. Repeat step c for both the pilot and main burner flame. Do not sacrifice the main flame signal to obtain an unnecessarily high pilot flame signal.
5. Repeat steps 2 and 3 for Sensitivity Control B, if used. Make sure the external selector switch is closed while adjusting Control B.
6. Secure the swivel mount (if used) or tack weld the sight pipe. Do not weld the sight pipe permanently into place until you have completed the spark hold-in and pilot turndown tests.
7. Remove the plug from the Flame Current meter jack.
8. Replace the rear cover plate on the detector. Ensure that the tips of the sensitivity control extensions on the rear cover are positioned properly to engage the slots of the respective sensitivity controls on the rear of the electronic chassis without altering their adjustments. Reinstall the six screws in the cover plate and tighten them securely.

Multiburner System Using the C7076D Detector (Flame Discrimination)

1. Complete steps 1 through 8 under Single Burner System above for each burner.
2. With all A sensitivity controls set to MAX position and all burners firing at full load, select one burner and proceed as follows:
   a. Shut down the chosen burner, then note the flame signal reading.
   b. Gradually reduce the sensitivity by turning Control A counterclockwise until the flame relay (in the flame safeguard control) drops out.
   c. Relight the burner and note the flame signal reading. The difference between the new reading and the initial reading in step a represents the degree of flame discrimination.
   d. Repeat the run-shutdown-dropout procedures (steps 2a-c) until the optimum setting has been achieved.

NOTE: If the sensitivity control on a detector is reduced to MIN position and flame discrimination cannot be achieved, insert an orifice plate in the sight pipe. An orifice of the proper diameter will reduce the ultraviolet radiation reaching the detector so that the sensitivity can be adjusted to effect flame discrimination.

3. Repeat step 2 for Sensitivity Control A on each burner.
4. Repeat step 2 for Sensitivity Control B (if used) on each burner. Verify that Sensitivity Controls A and B on each detector are properly indexed by the system fuel selector, firing rate switch, etc.

Multifuel System

For multifuel systems use one sensitivity control for each fuel. Follow steps 2 and 3 above for each fuel.

Ignition Spark Response Test

An ignition spark response test must be done for all detectors to ensure that ignition spark will not actuate the flame relay in the flame safeguard control The test is done by manually closing all fuel valves, starting the system, and observing the flame relay when the ignition comes on. If the flame relay pulls in, the detector must be repositioned to eliminate the response to ignition spark.

Pilot (Ignitor) Turndown Test

A pilot (ignitor) turndown test must be done for all applications in which the detector must prove the pilot before the main fuel valve can open. This test proves that the smallest pilot flame which can hold in the flame relay (in the flame safeguard control) is also capable of safely igniting the main burner. The test consists of closing the main fuel valve, reducing the pilot flame until it is just able to hold in the flame relay, and then opening the main fuel valve to verify a safe main burner lightoff.

Secure the Sight Pipe or Swivel Mount

1. When the flame signal is acceptable and all adjustments have been made, remove the detector.
2. Secure the sight pipe (or swivel mount):

a. Weld the sight pipe in its final position, or
b. Tack weld the swivel ball in place in its socket if using a Honeywell 118367A Swivel Mount.

3. Reinstall the detector.

Aspirator Adjustment (C7076A Detector Only)

Make the final connections and adjustments of the optional air supply (if used). Refer to the paragraph entitled Connecting Air Supply.

Final Checkout

Before putting the burner(s) into service, check out the installation using procedures in the Checkout section of the instruction sheet for the appropriate flame safeguard control. After completing the checkout, run the burner(s) through at least five complete cycles to verify proper operation.

TROUBLESHOOTING

⚠ WARNING

Electrical Shock Hazard.
Can cause serious injury or death.
Open the master switch before removing or installing the plug-in electronics chassis or the detector. Line voltage is present on some of the terminals when power is on.

General

If you cannot obtain a satisfactory flame signal while adjusting the sensitivity, refer to the preliminary and troubleshooting procedures that follow. If you encounter other problems in the system, refer to the Troubleshooting section in the instruction sheet for the appropriate flame safeguard control.

Upon completion of the troubleshooting, be sure to perform the adjustment and checkout procedures previously specified for the detector.

NOTE: Instructions for replacing the viewing lens, sensing tube, coil and shutter assembly and plug-in electronic chassis are given in the Service section.

Before making a replacement, make sure you have the correct part (check its part number and voltage rating).

Equipment Required

1. Voltmeter (Honeywell W136A or equivalent) with 0 to 300 volt ac scale.
2. Microammeter (Honeywell W136A or equivalent) with 0 to 25 microampere range, SPL damping.
3. Meter connector plug (Honeywell part no. 117053 or equivalent)—required for some meters.
4. Replacement parts—see Specifications section.

Preliminary Procedures for C7076A Flame Detector

IMPORTANT

If the combustion chamber has a positive pressure, make sure the aspirator inlet pressure equals or exceeds that required for sight pipe seal off, as given on Fig. 9, before unlatching the detector.

1. If you are using remote sensitivity selection, make sure that the external selector switch is open if adjusting Sensitivity Control A or closed if adjusting Sensitivity Control B.
2. Unlatch the detector and swing it away from the faceplate.
3. Loosen the four captive screws in the front cover plate (with the viewing lens) and remove the plate to expose the terminal block. The wiring diagram is on the inside of the front cover plate.
4. After each step in the following procedures, relatch the detector to the faceplate and check for a meter reading at the Flame Current jack on the detector (Fig. 17).
   a. If you get a reading above 1.4 microamperes and the flame relay (in the flame safeguard control) pulls in, return to Sensitivity Adjustments.
   b. If you do not get a reading, unlatch the detector and proceed with Troubleshooting Procedure **A**, following.
   c. If you get a reading but the flame relay (in the flame safeguard control) does not pull in, unlatch the detector and proceed with Troubleshooting Procedure **B**, following.

Preliminary Procedures for C7076D Flame Detector

⚠ WARNING

Fire or Explosion Hazard.
Can cause serious injury or death.
Make sure that the environment surrounding the C7076D Flame Detector is free of all explosive or hazardous conditions before exposing the interior of the detector to the atmosphere during the performance of the following troubleshooting procedures.

1. If you are using remote sensitivity selection, make sure that the external selector switch is open if adjusting Sensitivity Control A, or closed if adjusting Sensitivity Control B.
2. Remove the six screws that secure the cover plate to the rear of the detector to provide access to the Flame Current jack on the electronics chassis.
3. Remove the four screws that secure the faceplate (attached to the sight pipe) to the detector housing. Force the faceplate from the housing far enough to allow the detector to be sufficiently reoriented on the conduit to provide access to wiring at the terminal block in detector.

4. After each step in the following procedures, realign the detector with the faceplate and check for a meter reading at the Flame Current jack on the detector (Fig. 18).
   a. If you get a reading above 1.4 microamperes and the flame relay (in the flame safeguard control) pulls in, return to Sensitivity Adjustments.
   b. If you do not get a reading, orient the detector away from the faceplate sufficiently far enough to provide access to the wiring at the terminal block and proceed with troubleshooting Procedure **A**.
   c. If you get a reading but the flame relay (in the flame safeguard control) does not pull in, orient the detector away from the faceplate sufficiently far enough to provide access to the wiring at the terminal block and proceed with troubleshooting Procedure **B**.

Troubleshooting Procedures for C7076A and C7076D Flame Detectors.

NOTE: If the detector develops a signal at the Flame Current jack, skip troubleshooting Procedure **A**.

Procedure A: Zero Flame Signal Reading at Detector; Flame Relay Does not Pull In.

1. Complete the Preliminary Procedures listed above.
2. Refer to the wiring diagram on the inside of the front cover plate or to Fig 14 or 15 for terminal locations.
3. Check for proper line voltage. Connect an ac voltmeter across terminals 2 and 1 (or 8, if detector is non-European 240 volt, 50/60 Hz model) on the terminal block. Make sure the ac voltage measured is within the voltage range listed in Table 3, below, for the particular detector model used.

NOTE: The nominal voltage rating is printed on the transformer cover next to the sensitivity controls on the rear of the plug-in electronics chassis.

   a. If there is no voltage, make sure line voltage power is connected to the master switch, the master switch is closed and overload protection (circuit breaker, fuse, or similar device) has not opened the power circuit.
   b. If the measured voltage is not within the proper voltage range, make sure the main power supply is of the correct voltage and frequency. Then trace the wiring between the detector and the main power supply to determine the problem.

Table 3. Line Voltage Ratings for the Detector.

Nominal Voltage Rating	Acceptable Line Voltage	
	Minimum	Maximum
100	85	110
117	99.5	128.7
120	102	132
200	170	220
220	187	242
240	204	264

4. Determine if the self-checking shutter is open by looking into the front of the detector through the pipe in the wiring compartment.
   a. If the shutter is not open, connect an ac voltmeter across terminals 3 and 4 on the terminal block. Make sure the ac voltage measured is within the voltage range listed in Table 4.

NOTE: The nominal voltage rating is printed on the transformer cover next to the sensitivity controls on the rear of the plug-in electronics chassis.

Table 4. Shutter Voltage Range.

Nominal Detector Voltage Range	Acceptable Shutter Voltage	
	Minimum	Maximum
100	85	110
117, 120, 200, 220, 240 or 220/240	99.5	132

   (1) If the proper voltage is present, replace the coil and shutter assembly or the entire plug-in electronics chassis (see Service section).
   (2) If the measured voltage is not within the proper voltage range, connect a dc voltmeter (capable of measuring 50 volts) across terminals 6 (F) and 5 (G) on the terminal block (F is+, G is -)
      (a)If the voltage is 2 volts or more, replace the plug-in electronics chassis)(See Service section).
      (b)If the voltage is less than 2 volts, trace the shutter wiring between the detector and the flame safeguard control (refer to Fig 14 or 15). If the wiring is correct but the proper voltage is still not present, replace the plug-in R7476A or R7886 Dynamic Self-Check Ultraviolet Amplifier.
   b. If the shutter is open, make sure the sensitivity control on the plug-in electronics chassis is not set too low for the flame conditions encountered. (Refer to Adjustments and Checkout section.)
5. Make sure the viewing path is clear.
   a. Clean the sight pipe. Make sure there are no obstructions in it.
   b. Make sure the proper viewing lens is used.

NOTE: Window glass does not transmit ultraviolet radiation. You can check for an improper lens by testing the detector with the lens removed.

   c. Clean the viewing lens with a soft, clean cloth.
6. If the previous actions have not corrected the problem, replace the 191053 Ultraviolet Sensing Tube (See Service section).
7. If you still do not get a meter reading, replace the plug-in electronics chassis.

Procedure B: Flame Signal Reading Present at Detector; Flame Relay Does Not Pull In)

1. Complete the Preliminary Procedures listed above.
2. Determine if the self-checking shutter is closed by looking into the front of the detector through the pipe in the wiring compartment.

3. If the shutter is closed and the signal at the Flame Current jack on the detector is 1 microampere or more, remove the ultraviolet sensing tube (see Service section) and operate the detector.
   a. If the shutter opens, replace the 191053 Ultraviolet Sensing Tube.
   b. If the shutter stays closed, replace the plug-in electronics chassis (see Service section).
4. If the flame signal measured at the Flame Current jack on the detector is weak (less than 1.4 microamperes), proceed as follows:
   a. Clean the sight pipe. Make sure there are no obstructions in it.
   b. Clean the viewing lens with a soft, clean cloth.
   c. Make sure the sensitivity control on the plug-in electronics chassis is not set too low for the flame conditions encountered. (Refer to Adjustments and Checkout section.)
   d. Resight the detector. See Planning the Installation and Installation sections.
5. If the flame signal measured at the Flame Current jack on the detector is strong (greater than 1.4 microamperes), but the flame relay does not pull in, connect a dc voltmeter (capable of measuring 50 volts) across terminals 6 (F) and 5 (G) on the terminal block (F is +; G is -).
   a. If the voltage is less than 5 volts and the shutter is not oscillating, disconnect the F leadwire from terminal 6 for a moment.
      (1) If the voltage (5 to 6) rises, trace the wiring between the detector and the flame safeguard control (refer to Fig. 14 or 15). If the wiring is correct (no short circuits), replace the plug-in R7476A or R7886 Dynamic Self-Check Ultraviolet Amplifier.
      (2) If the voltage (F to G) does not rise, replace the plug-in electronics chassis (see Service section).
   b. If the voltage is 5 volts or more, check the F and G leadwires between the detector and the flame safeguard control. If they are wired properly (no open circuits), replace the plug-in R7476A or R7886 Dynamic Self-Check Ultraviolet Amplifier.
6. If the previous actions have not corrected the problem, replace the plug-in electronics chassis.

SERVICE

⚠ WARNING

Electrical Shock Hazard.
Can cause serious injury or death.
Open the master switch before removing or installing the plug-in electronics chassis or the detector.

⚠ WARNING

Fire or Explosion Hazard.
Can cause serious injury or death.
Make sure that the environment surrounding the C7076D Flame Detector is free of all explosive or hazardous conditions before exposing the interior of the detector to the atmosphere during the performance of the following troubleshooting procedures.

IMPORTANT

If the combustion chamber (C7076A Flame Detector) has a positive pressure, make sure the aspirator inlet pressure equals or exceeds that required for sight pipe seal off, as given on Fig. 9, before unlatching the detector.

IMPORTANT

Only qualified flame safeguard technicians should attempt to service or repair flame safeguard controls and burner management systems.

Periodic Maintenance

1. Scheduled replacement of the detector components is not necessary.
2. Keep the flame detection system adjusted for safe and reliable operation
3. Clean the viewing lens regularly. Use a soft, clean cloth. If the lens is damaged, or if it is coated with a substance which cannot be cleaned off, replace it (see Maintenance Procedures, following).
4. C7076A Detector only: Replace the silicone-rubber gaskets which seal the front and rear cover plates if they are damaged or deteriorated (see Maintenance Procedures, following).

Maintenance Procedures

⚠ CAUTION

Equipment Damage Hazard.
Improper part replacement can damage the equipment.
Before making a replacement, make sure you have the correct part (check its part number and voltage rating).

Replacing the Plug-In Electronics Chassis

REPLACING THE PLUG-IN ELECTRONICS CHASSIS IN THE C7076A FLAME DETECTOR

1. Open the master switch to interrupt all power to the detector.
2. Loosen the four captive screws in the rear cover plate and remove the plate.
3. Remove the four standoffs that hold the plug-in electronics chassis and pull the chassis out of the housing.
4. Align the slot in the top of the new chassis with the key in the housing.

IMPORTANT

Make sure the part number and the voltage rating of the new chassis are correct.

5. Insert the new chassis in the housing and firmly push it all the way in (see Fig. 18). Make sure the octal plug on the chassis is securely seated in the socket in the housing.
6. Insert the four standoffs that hold the chassis and tighten them securely.
7. Close the master switch and perform the Adjustments and Checkout.
8. Put the rear cover plate back on and tighten the four screws securely.

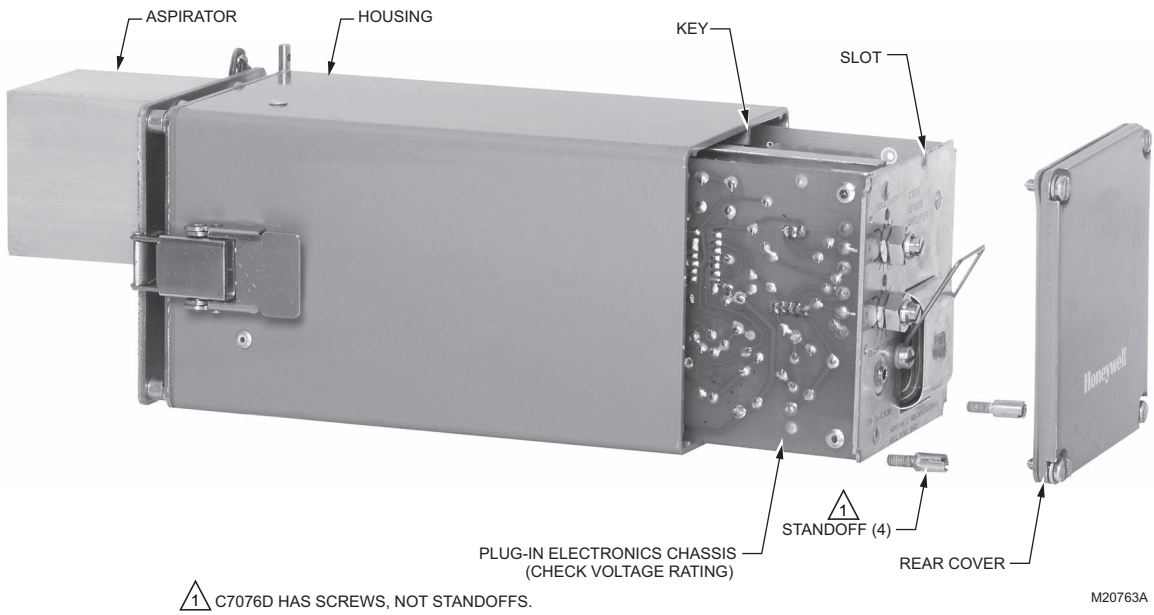

Fig. 18. Replacing the plug-in electronics chassis in the C7076 Flame Detector.

REPLACING THE PLUG-IN ELECTRONICS CHASSIS IN THE C7076D FLAME DETECTOR.

NOTE: Removing and replacing the plug-in electronics chassis in the C7076D is identical to the procedure for the C7076A, above, with the exception of steps **2**, **8** and **9**, below.

1. Open the master switch to interrupt all power to the detector.
2. Remove the six screws securing the cover plate to the rear of the housing and remove the cover plate.
3. Remove the four screws securing the plug-in electronics chassis and pull the chassis out from the housing.
4. Align the slot in the top of the new chassis with the key in the housing.

IMPORTANT

Make sure the part number and the voltage rating of the new chassis are correct.

5. Insert the new chassis in the housing and firmly push it all the way in Make sure the octal plug on the chassis is securely seated in the socket in the housing.
6. Reinstall the four screws that hold the chassis in the housing and tighten them securely.
7. Close the master switch and perform the Adjustment and Checkout procedures previously specified.
8. Replace the rear cover plate on the detector. Make sure that the tips of the sensitivity control extensions on the rear cover are positioned properly to engage the slots of the respective sensitivity controls on the rear of the electronics chassis without altering their adjustments.
9. Reinstall the six screws in the cover plate and tighten them securely.

REPLACING THE ULTRAVIOLET SENSING TUBE

1. Open the master switch and remove the plug-in electronics chassis as specified in Replacing the Plug-in Electronics Chassis, above.
2. Locate the sensing tube near the top of the chassis. (See Fig. 19.)
3. Gently push the alignment guide away from the tube until the tip of the tube is free.
4. While holding the alignment guide away from the tube tip, grasp the tab on the tube bracket and swing the tube out from the chassis.
5. Pull the tube out of its socket.
6. Align the three pins on the new tube with the holes in the socket.
7. Push the new tube firmly into the socket. Make sure it is seated securely.
8. Swing the tube back into place in the chassis. The alignment guide will snap into place around the tip of the tube.
9. Reinstall the plug-in electronics chassis as specified in Replacing the Plug-in Electronics Chassis, above.
10. Close the master switch and perform the adjustments and checkout.

IMPORTANT

Be very careful not to kink or otherwise damage the shutter (Fig. 19).

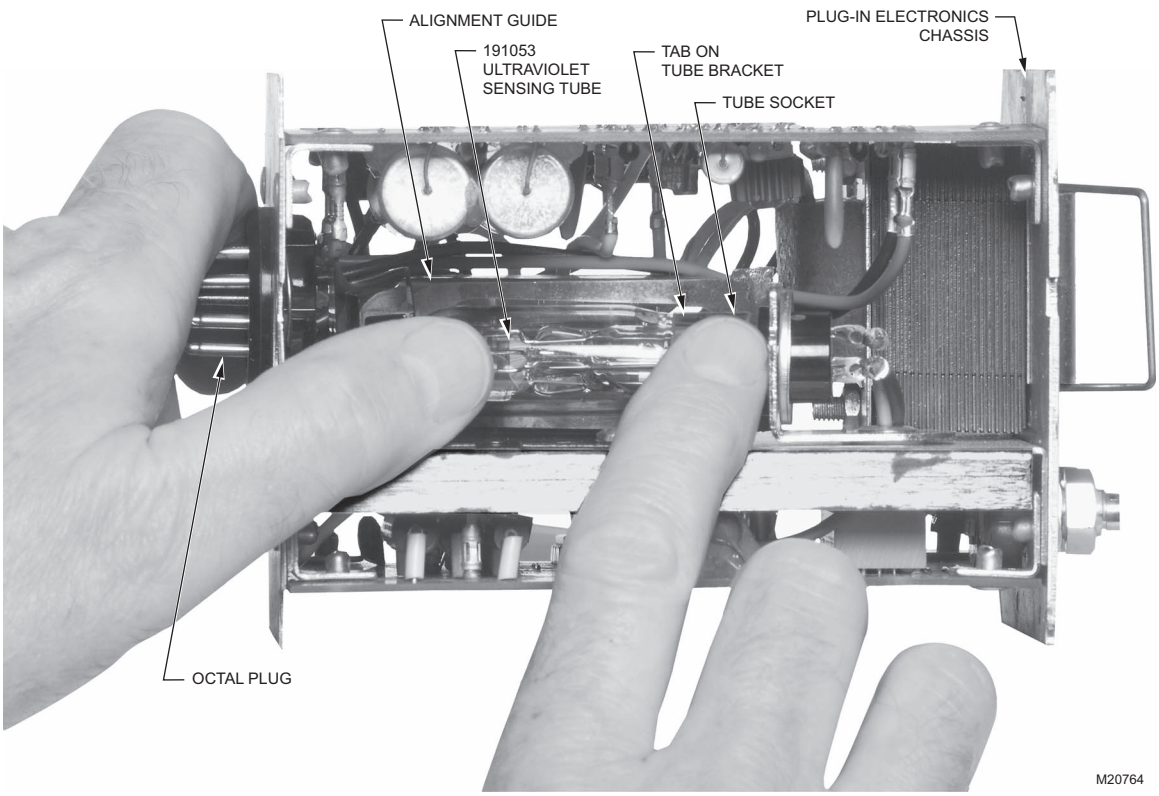

Fig. 19. Replacing the ultraviolet sensing tube.

REPLACING THE COIL AND SHUTTER ASSEMBLY

1. Open the master switch and remove the plug-in electronics chassis as specified in Replacing the Plug-in Electronics Chassis, above.
2. Locate the coil near the bottom of the chassis (Fig. 22).
3. Cut the two white coil wires as close to the coil as possible.
4. Remove the mounting screw from the base of the coil and shutter assembly.
5. Turn the chassis over and locate the sensing tube.
6. Gently push the alignment guide away from the tube (just enough to free the tip of the sensing tube) and swing the tube out from the chassis as far as it will go (Fig. 21).
7. Remove the other mounting screw from the base of the coil and shutter assembly (Fig. 22).
8. Carefully slide the coil and shutter assembly out of the chassis.

NOTE: It may be necessary to move some of the transformer leadwires out of the way in order to slide the coil and shutter assembly past them.

9. Slide the new coil and shutter assembly into place. Make sure its part number and voltage rating are correct.
10. Remove about 1/4 in. (6 mm) of insulation from each of the two short, white leadwires still connected to the octal plug.
11. Using wire nuts, connect one of the coil wires to one of the short, white leadwires on the plug and connect the other coil wire to the other short, white leadwire.
12. Insert the two mounting screws in the base of the coil and shutter assembly and tighten them securely.
13. Swing the sensing tube back into place in the chassis. The alignment guide will snap into place around the tip of the tube.
14. Reinstall the plug-in electronics chassis as specified in Replacing the Plug-in Electronics Chassis, above.
15. Close the master switch.

IMPORTANT

Be very careful not to kink or otherwise damage the shutter.

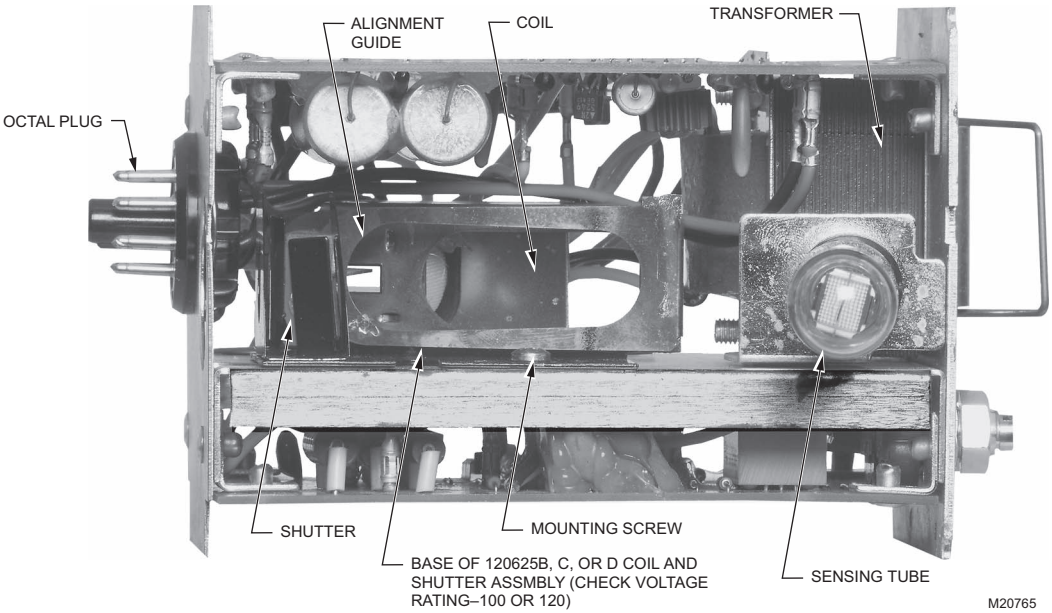

Fig. 20. Location of the coil and shutter assembly.

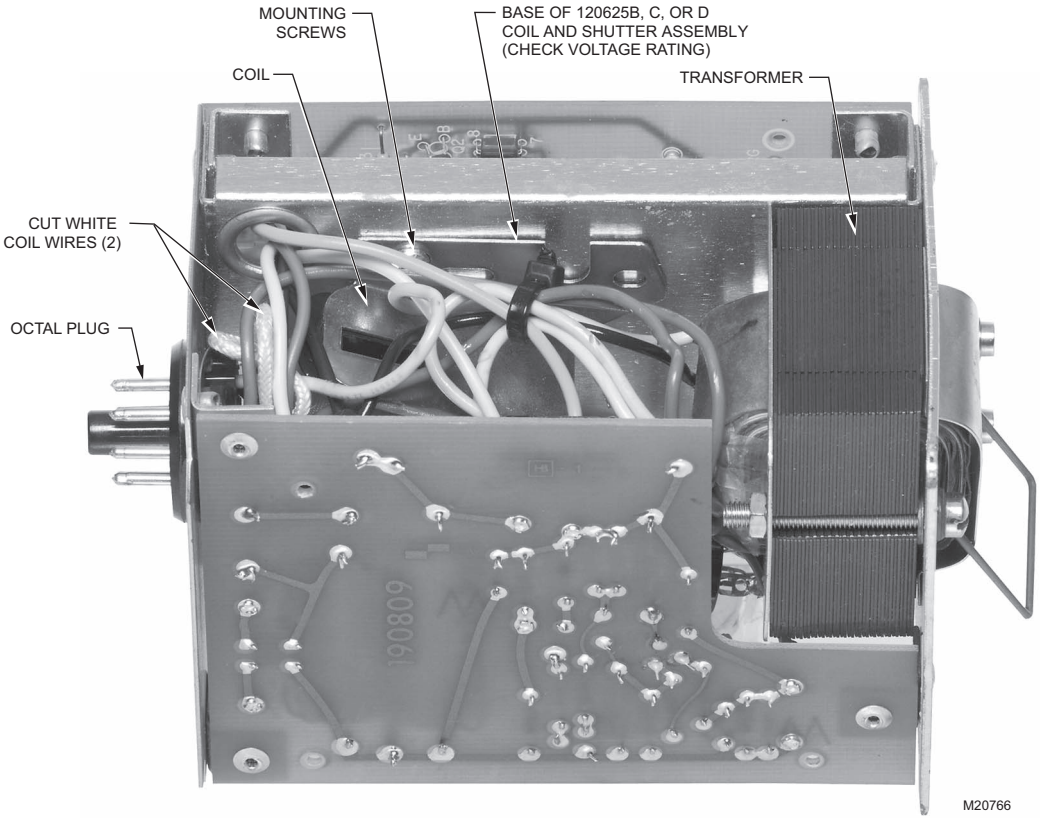

Fig. 21. Replacing the coil and shutter assembly.

REPLACING THE VIEWING LENS

Replacing the Lens in the C7076A Flame Detector

1. Open the master switch to interrupt all power to the detector.
2. If the combustion chamber has a positive pressure, make sure the airflow through the aspirator equals or exceeds the value required for seal-off (Fig. 10).

3. Unlatch the detector and swing it away from the faceplate-aspirator.
4. Loosen the four captive screws in the front cover plate and remove the plate.
5. Press on the back of the silicone-rubber grommet until it pops out of the cover plate.
6. Push on the back of the lens until it pops out of the grommet.
7. Insert the new lens, flat side toward the grommet small flange and curved side toward the flame, into the recess in the grommet. Make sure the recess completely encloses the lens.
8. Push the small flange of the grommet through the hole in the cover plate until it pops into place. Make sure the flange is completely through the the hole and the grommet is properly seated.
9. Clean both sides of the viewing lens with a soft, clean cloth.
10. Put the front cover plate back on and tighten the four screws securely.
11. Latch the detector against the faceplate-aspirator and close the master switch.

Replacing the Lens in the C7076D Flame Detector

1. Open the master switch to interrupt all power to the detector.
2. Remove the four screws securing the faceplate (attached to the sight pipe) to the detector housing. Force the faceplate and housing sufficiently far apart to provide access to the lens mounted on the sight tube on the bracket assembly inside the housing.
3. Remove the rubber grommet containing the lens from the sight tube.
4. Press on the back of the lens until it pops out of the grommet.
5. Insert the new lens, flat side toward the small flange and curved side toward the flame, into the recess of the grommet. Make sure the recess completely encloses the lens.
6. Clean both sides of the lens with a soft, clean cloth. Reinstall the grommet on the sight tube on the bracket.
7. Realign the faceplate and detector housing. Install the four screws in the faceplate and tighten securely.
8. Close the master switch.

REPLACING THE GASKET SEALS (C7076A DETECTOR ONLY)

1. Open the master switch to interrupt all power to the detector.
2. If the combustion chamber has a positive pressure, make sure the airflow through the aspirator equals or exceeds the value required for seal-off (see Fig. 10).
3. Unlatch the detector and swing it away from the faceplate-aspirator.
4. Loosen the four captive screws in the front cover plate and remove the plate.
5. Using a putty knife, carefully separate the silicone-rubber gasket from the inside of the plate (see Fig. 22).
6. Pull the gasket over the ends of the four screws and discard the gasket.
7. Scrape any residual adhesive from the plate, leaving a smooth surface to which the new gasket can adhere.
8. Insert the four screws through the holes in the corner of the new gasket.
9. Glue the new gasket to the plate, using a good silicone rubber adhesive, such as RTV32. Follow the instructions supplied with the adhesive.
10. Put the cover plate back on and tighten the four screws securely.
11. Repeat steps **4** through **10** for the rear cover plate.
12. Latch the detector against the faceplate-aspirator and close the master switch.

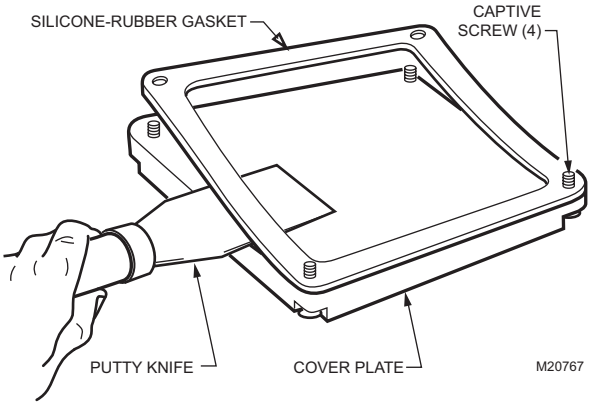

Fig. 22. Replacing the C7076A Detector gasket seals.

Honeywell

Automation and Control Solutions

Honeywell
1985 Douglas Drive North
Golden Valley, MN 55422

Honeywell Limited-Honeywell Limitée
35 Dynamic Drive
Scarborough, Ontario
M1V 4Z9

95-8269—1 G.R. Rev. 09-02

Printed in U.S.A. on recycled paper containing at least 10% post-consumer paper fibers.

www.honeywell.com