Set Points from 0.5 to 150 psi

5000 Series Extended Duty Pressure Switch With Direct Action Blade Contacts

The 5000 Series switch is specifically designed to stand up to extended duty applications. This switch is factory set but capable of field adjustment. It features a Kapton diaphragm for compatibility with a wide variety of fluids, and various terminations including a Metri-Pack connector that forms a tight seal when connected. Among the outstanding design benefits are its durable construction, compact size, and enhanced set point integrity.

Standard Specifications

Type: Direct action blade contact
Contacts: Silver alloy, gold plated
Set Point: Factory set from 0.5 to 150 PSI
Operating Pressure:
150 PSI for 0.5-24 PSI set point range,
250 PSI for 25-150 PSI set point range
Proof Pressure: 500 PSI
Burst Pressure: 750 PSI for 0.5-24 PSI set point range
1250 PSI for 25-150 PSI set point range.

Switch Boot P/N 79380 for Vacuum and Pressure

Ratings:

Resistive:	15	AMP-	6	VDC
	8	AMP-	12	VDC
	4	AMP-	24	VDC
Inductive:	1	AMP-	120	VAC
	0.5	AMP-	240	VAC

Diaphragm: Polyimide film
Temperature Range: -40° F to + 250° F
Connector: 1/8 -27 NPT male thread
Terminals: #8-32 screws, 1/4" blade, 280 Series Metri-Pack
Circuitry: SPST-N.O., N.C., 1 circuit adjustable dual circuit, or 2 circuits adjustable dual circuit. Also available are N.O./N.O. dual circuit and N.C./N.C. dual circuit.
Base: Plated Steel
Cover: Glass reinforced polyester
Options: Brass, plastic or stainless steel base; various base connector thread sizes; wire leads (potted & sealed).

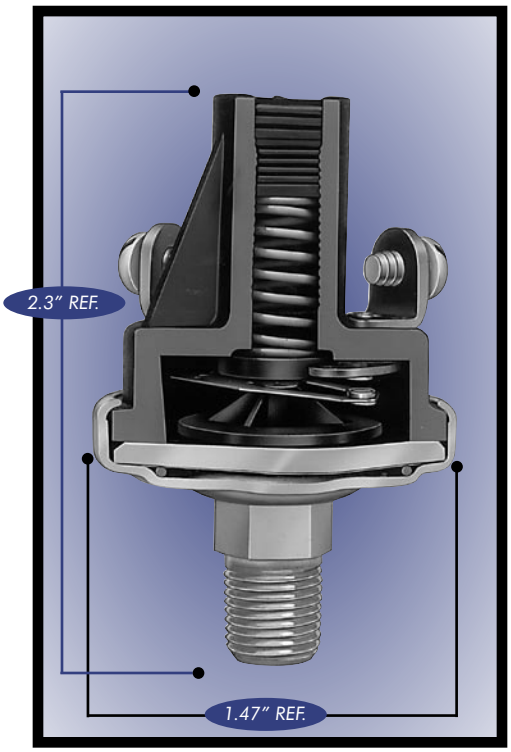

5000 Series Switch with Screw Terminals

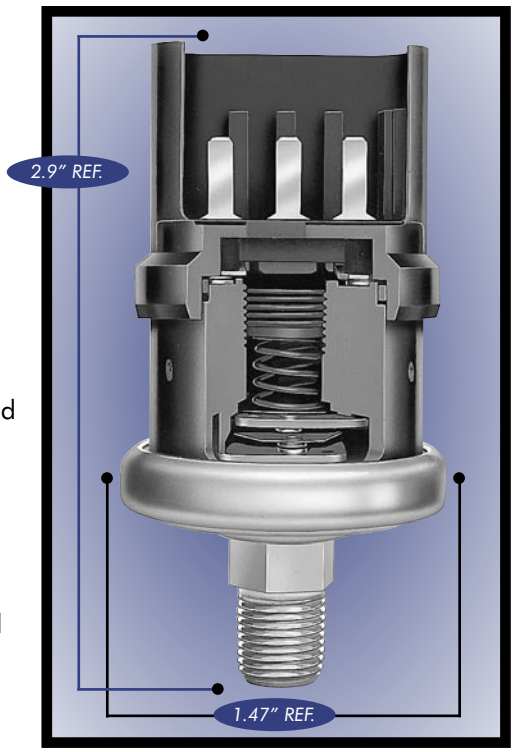

5000 Series Switch with Metri-Pack Terminal

NOTE: *OPERATING MEDIA (PRESSURE SWITCH)*
The pressure switch is designed to operate with air, motor oils, transmission oils, jet fuels and other similar hydrocarbon media.

Промэлектроника
sales@prom-elec.com

5000 Series Pressure Switch With Standard Terminal

			Single Circuit 1 Terminal		Single Circuit 2 Terminals		Dual Circuit One circuit adjustable[1]		Dual Circuit Both circuits adjustable[2]		
Contact Setting	Factory Set At	Circuitry	Part Number		Part Number		Part Number		Contact Setting[3]	Part Number	
			Screw	Blade	Screw	Blade	Screw	Blade		Screw	Blade
0.5-1 PSI ±0.3	1 PSI	N.O.	78630	78631	78628	78629	78711	78712	3-4 PSI ±0.5	76081	76086
		N.C.	78634	78635	78632	78633					
1.1-3 PSI ±0.5	2 PSI	N.O.	78142	78399	76051	76056	76071	76076	5-8 PSI ±1	76582	76590
		N.C.	78149	78406	76061	76066					
3.1-7 PSI ±1	4 PSI	N.O.	78143	78400	76575	76583	76579	76587	9-24 PSI ±2	76082	76087
		N.C.	78150	78407	76577	76585					
8-13 PSI ±2	10 PSI	N.O.	78144	78401	76576	76584	76580	76588	25-50 PSI ±3	76083	76088
		N.C.	78151	78408	76578	76586					
14-24 PSI ±3	15 PSI	N.O.	78145	78402	76052	76057	76072	76077	51-90 PSI +5/-2	76084	76089
		N.C.	78152	78409	76062	76067					
25-50 PSI ±5	35 PSI	N.O.	78146	78403	76053	76058	76073	76078	91-150 PSI +8/-2	76085	76090
		N.C.	78153	78410	76063	76068					
51-90 PSI ±7	60 PSI	N.O.	78147	78404	76054	76059	76074	76079			
		N.C.	78154	78411	76064	76069					
91-150PSI ±10	100 PSI	N.O.	78148	78405	76055	76060	76075	76080			
		N.C.	78155	78412	76065	76070					

5000 Series Pressure Switch With Metri-Pack Terminal

			Single Circuit (Mates with Packard P/N 15300027)	Dual Circuit One circuit adjustable[1] (Mates with Packard P/N 12034147)	Dual Circuit Both circuits adjustable[2] (Mates with Packard P/N 12034147)	
Contact Setting	Factory Set At	Circuitry	Part Number	Part Number	Contact Setting[3]	Part Number
1-3 PSI ±0.5	2 PSI	N.O.	77029	77038	3-4 PSI ±0.5	77047
		N.C.	77020			
4-6 PSI ±1	5 PSI	N.O.	77030	77039	5-10 PSI ±1	77048
		N.C.	77021			
7-12 PSI ±2	10 PSI	N.O.	77031	77040	11-24 PSI ±2	77049
		N.C.	77022			
13-24 PSI ±3	20 PSI	N.O.	77032	77041	25-46 PSI ±3	77050
		N.C.	77023			
25-46 PSI ±5	35 PSI	N.O.	77033	77042	47-76 PSI +5/-2	77051
		N.C.	77024			
47-76 PSI ±6	60 PSI	N.O.	77034	77043	77-100 PSI +7/-2	77052
		N.C.	77025			
77-100 PSI ±7	85 PSI	N.O.	77035	77044	101-126 PSI +9/-2	77053
		N.C.	77026			
101-126 ±9	115 PSI	N.O.	77036	77045	127-150 PSI +10/-2	77054
		N.C.	77027			
127-150 PSI ±10	135 PSI	N.O.	77037	77046		
		N.C.	77028			

Notes:

1. The N.C. circuit is the reference circuit for the dual circuit switch; the normally open circuit is not adjusted. The expected dead band between the N.C. & N.O. circuit is shown in the chart below. For applications requiring the normally open circuit as the reference circuit the N.C. circuit is not adjusted.

2. Switch may be adjusted so that:
A. N.C. circuit opens before N.O. circuit closes.
B. N.C. and N.O. circuit have same set point.
C. N.O. circuit closes before the N.C. circuit opens. (There is no dead band and both circuits are on for a brief period of time.)

3. The tolerances given in the table are applicable to a switch adjusted so that the N.O. circuit closes before the N.C. circuit opens and applies to the N.C. circuit. The N.O. set point and tolerances are such that a minimum overlap of 1 PSI exists during which both circuits are on.

Note 1: Expected Dead Band (Higher than N.C. circuit)

Contact Setting	Dead Band
0.5-3 PSI	1.5 PSI
4-7 PSI	2.5 PSI
8-13 PSI	3.5 PSI
14-24 PSI	8 PSI
25-50 PSI	15 PSI
51-90 PSI	23 PSI
91-150 PSI	40 PSI