D15S PRESSURE REDUCING VALVE

DIAPHRAGM-ACTUATED WITH CARTRIDGE INSERT

- Inlet pressure balancing – no influence on outlet pressure by fluctuating inlet pressure
- Patented cartridge solution for easy assembly and maintenance
- Three cartridge inserts for all nominal widths make warehousing efficient
- High corrosion resistance due to stainless steel cartridge and PA coating
- The adjustment spring is not in contact with the drinking water
- With inlet and outlet pressure gauge
- Functionality and performance have been confirmed by an accelerated life test with over 400,000 cycles (requirement acc. to EN1567: 200,000 cycles)
- Conforms to BSEN 1567
- All materials are UBA conform
- All materials are ACS approved

APPROVALS

- DVGW
- WRAS (up to 23°C)
- KIWA (DN65-DN100)
- SVGW (DN65-DN100)

APPLICATION

According EN 806-2 pressure reducing valves of this type protect household water installations against excessive pressure from the supply. They can also be used for industrial or commercial applications within the range of their specification.

By installing a pressure reducing valve, pressurisation damage is avoided and water consumption is reduced. The set pressure is also maintained constant, even when there is wide inlet pressure fluctuation.

Reduction of the operating pressure and maintaining it at a constant level minimizes flow noise in the installation.DIAPHRAGM-ACTUATED WITH CARTRIDGE INSERT

Technical Specification

Media

Medium	Drinking water
Optional medium	Compressed air*1 acc. ISO 8573-1 class 2 in consideration of valid standards (e.g. EN 12502)

Connections/Sizes

Connection sizes:	2", 2 1/2", 3", 4", 6", 8"
Nominal sizes:	DN50, DN65, DN80, DN100, DN150, DN200
	DN125 available with adapter flanges DN100/DN125

Pressure values

Max. inlet pressure	16 bar
Outlet pressure	DN 50 - 100: 1.5 - 7.5 bar
	DN 150 - 200: 1.5 - 8 bar
Nominal pressure	PN 16
Min. pressure drop	1.0 bar

Operating temperatures

Max. operating temperature medium	65 °C (WRAS approved up to 23°C)

Note: *1 As part of an installation being approved according to PED requirements, this product must also be certified.

Honeywell

ПРОМЭЛЕКТРОНИКА / sales@prom-elec.com

CONSTRUCTION

Overview

	Components	Materials
1	Spring bonnet with adjustment screw	Ductile cast iron (EN-GJS-400-15 EN 1563), coated with PA (polyamide)
2	Pressure gauge	-
3	Screws and nuts	Stainless steel
4	Housing with PN16 flanges per ISO 7005-2, EN 1092-2, face to face length acc. EN 558-1	Ductile cast iron (EN-GJS-400-15 EN 1563), coated with PA (polyamide)
	Not depicted components	
	Adjustment spring	Spring steel
	Diaphragm and seals	EPDM
	Cartridge insert	Stainless steel
	Groove ring and sealing disc	EPDM

METHOD OF OPERATION

Spring loaded pressure reducing valves operate by means of a force equalising system. The force of a diaphragm operates against the force of an adjustment spring. If the outlet pressure and therefore diaphragm force fall because water is drawn, the then greater force of the spring causes the valve to open. The outlet pressure then increases until the forces between the diaphragm and the spring are equal again.

The inlet pressure has no influence in either opening or closing of the valve. Because of this, inlet pressure fluctuation does not influence the outlet pressure, thus providing inlet pressure balancing.

INSTALLATION GUIDELINES

Setup requirements

- Install in horizontal pipework with spring bonnet directed upwards
- Installation in vertical pipework possible with increased maintenance effort
- Install shut-off valves
- The installation location should be protected against frost and be easily accessible
  - Pressure gauge can be read off easily
  - Simplified maintenance and cleaning
- Install downstream of the filter or strainer
  - This position ensures optimum protection for the pressure reducing valve against dirt
- Provide a straight section of pipework of at least five times the nominal valve size after the pressure reducing valve (in accordance with EN 806-2)
- Requires regular maintenance in accordance with EN 806-5

TRANSPORTATION AND STORAGE

Keep parts in their original packaging and unpack them shortly before use.

The following parameters apply during transportation and storage:

Parameter	Value
Environment:	clean, dry and dust free
Min. ambient temperature:	5 °C
Max. ambient temperature:	55 °C
Min. ambient relative humidity:	25 % *
Max. ambient relative humidity:	85 % *

* non condensing

Installation Example

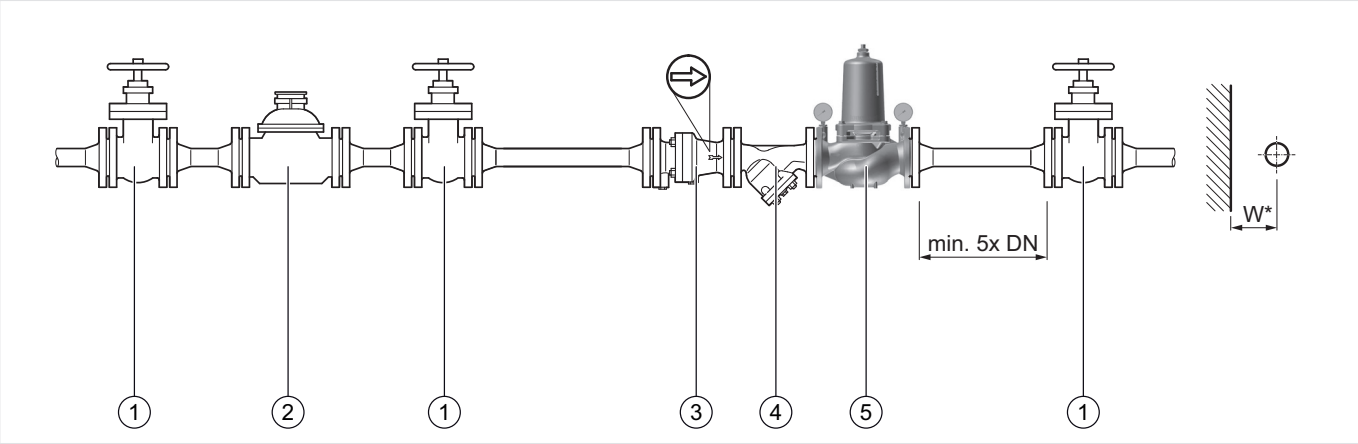

Fig. 1 Standard installation example for the pressure reducing valve

1 Shut-off valve
2 Water meter
3 Non return valve
4 Strainer
5 Pressure reducing valve

Connection sizes						
DN	50	65	80	100	150	200
inch	2"	2 1/2"	3"	4"	6"	8"
Distance in mm (W*)	110	120	130	145	200	230

* Required installation distances between the centerline of the pipework and the surrounding in dependency of the connection size.

TECHNICAL CHARACTERISTICS

kvs-Values

Connection sizes						
DN	**50**	**65**	**80**	**100**	**150**	**200**
Inch	2"	2 1/2"	3"	4"	6"	8"
DVGW registration number	requested	P-NW-6330CN0112			n.a.	
k_{vs}-value (m^3/h)	18	49	51	56	230	255

Pressure drop characteristics

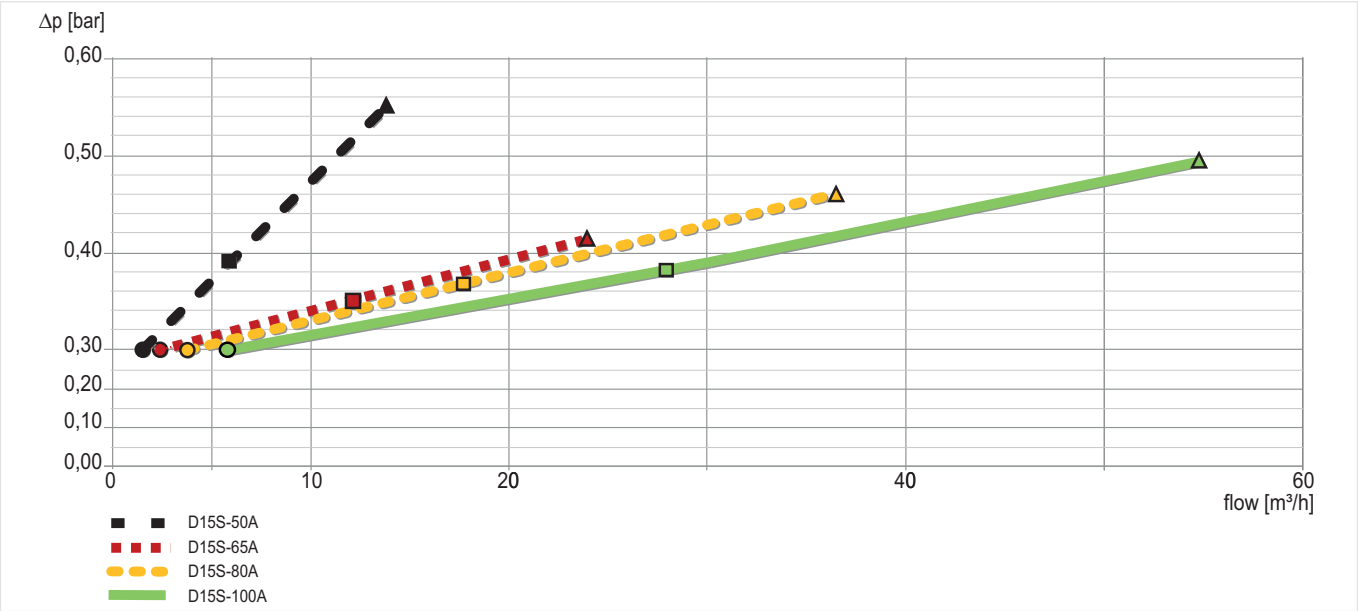

Fig. 2 Pressure drop within the valve in dependency of the flow rate and the used connection size (Sizes 50-100)
Pressure setting: P1: 8bar, P2: 3bar

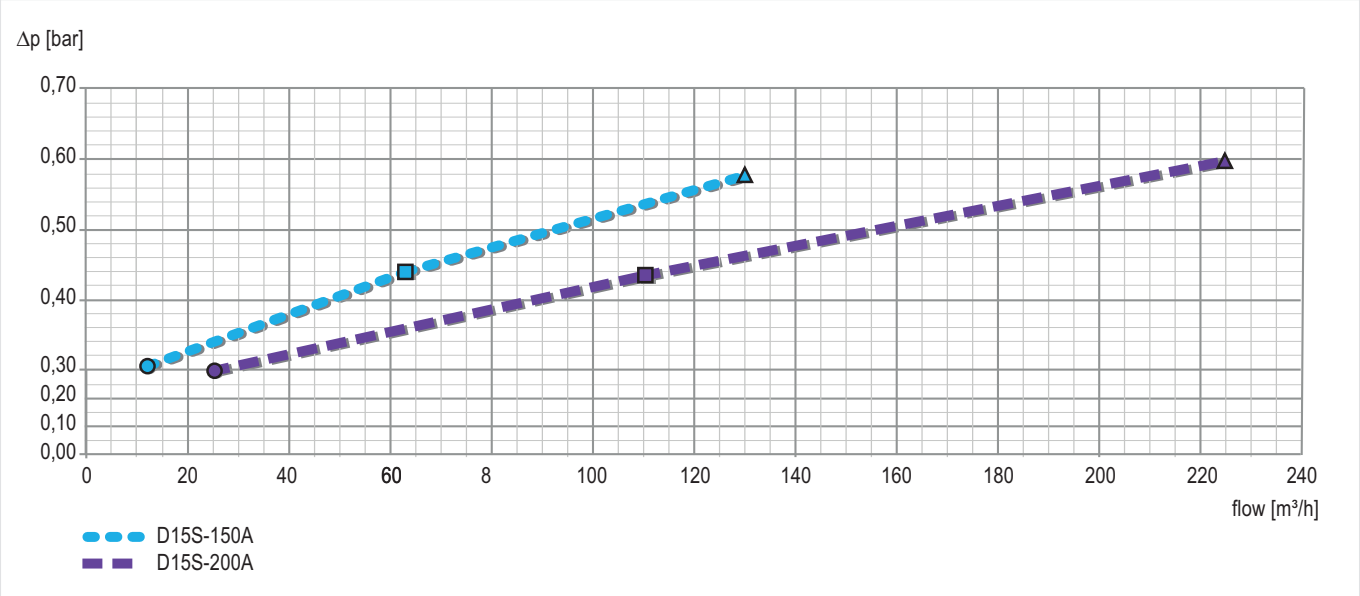

Fig. 3 Pressure drop within the valve in dependency of the flow rate and the used connection size (Sizes 150-200)
Pressure setting: P1: 8bar, P2: 3bar

	DN50	DN65	DN80	DN100	DN150	DN200
● ≙ 10% of standard flow	1.4 m^3/h	2.4 m^3/h	3.6 m^3/h	5.6 m^3/h	12.7 m^3/h	22.6 m^3/h
■ ≙ 1m/s flow rate	7 m^3/h	12 m^3/h	18 m^3/h	28 m^3/h	63 m^3/h	113 m^3/h
▲≙ 2m/s flow rate = QN	14 m^3/h	24 m^3/h	36 m^3/h	56 m^3/h	127 m^3/h	226 m^3/h
Flow rate 4m/s flow velocity	28 m^3/h	48 m^3/h	72 m^3/h	112 m^3/h	254 m^3/h	452 m^3/h

DIMENSIONS

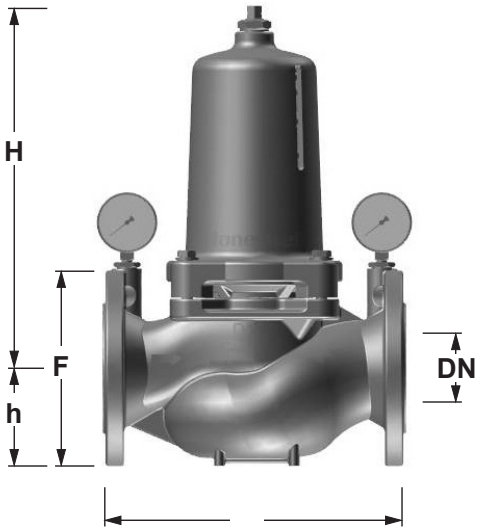

Overview							
Parameter		**Values**					
Connection sizes	Inch	2"	2 1/2"	3"	4"	6"	8"
Nominal sizes	DN	50	65	80	100	150	200
Weight	kg	14	30.5	32	34.5	110	135
Dimensions	L	230	290	310	350	480	600
	H	296	370	370	370	541	534
	h	83	93	100	110	143	170
	F	165	185	200	220	285	340

Note: All dimensions in mm unless stated otherwise.

ORDERING INFORMATION

The following tables contain all the information you need to make an order of an item of your choice. When ordering, please always state the type, the ordering or the part number.

Options

The valve is available in the following sizes: 2", 2 1/2", 3", 4", 6" and 8".

- Standard

- not a ailable

		D15S-...A
Flanges	PN 16, ISO 7005-2, EN 1092-2, face to face length acc. EN558-1	•
Housing	Ductile cast iron (EN-GJS-400-15 EN 1563), coated with PA (polyamide)	•

Note: ... = space holder for connection size

Note: Ordering number example for 2 1/2" and type A valve: D15S-65A

Accessories

Parameter	Description		Dimension	Part No.
	EXF125-A	**Extension flange DN125** Adapter flanges DN100 to DN125 Ductile iron, PN16 acc. ISO 7005-2 and EN1092-2. Overall length with adapter flanges (without bolts) DN125 L=416mm, DVGW approved, including bolts and nuts.		
				EXF125-A

Spare Parts

Pressure Reducing Valve D06F, from 1997 onwards

Overview

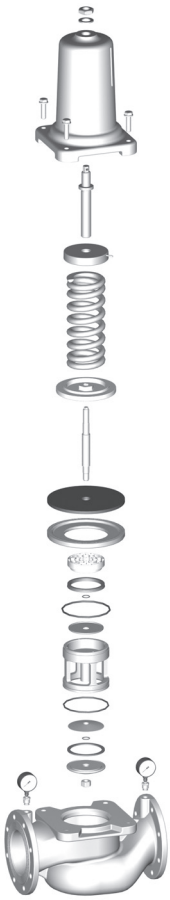

Technical Specification

	Description	Dimension	Part No.
1	**Valve insert complete**		
		DN50 DN65 - DN100 DN150 - DN200	0904175 0904120 0904139
2	**Set of seals complete**		
		DN50 DN65 - DN100 DN150 - DN200	0904176 0904121 0904140
3	**Pressure gauge**		
		0 - 10 bar	M39M-A10
4	**Pressure gauge**		
		0 - 16 bar	M39M-A16

For more information,
https://honeywellbuildings.in
Call: 1-800-103-0339
Email: HBT-Indiabuildings@honeywell.com

Honeywell HBT India Buildings
Unitech Trade Center, 5th Floor, Sector-43,
Block C, Sushant Lok Phase - I,
Gurgaon - 122 002

www.honeywell.com

© 2020 Honeywell International Inc.