Solid State Relays with Built-in Current Transformer

G3PF

CSM_G3PF_DS_E_7_3

A New-concept SSR with Built-in Current Transformer.

Heater Burnout and SSR Short-circuit Failure Detection.

- **Built-in Current Transformer (CT) helps reduce wiring steps.**
- **Detects the burnout of any one of a group of heaters.**
- **Detects the burnout of 3-phase heaters.**
- **Detects SSR short-circuit failures.**
- **Error detection level can be easily set with a switch.**
- **Mounts to a DIN track or with screws.**
- **Three types of input terminals available: M3 terminals, screwless clamp terminals (detachable), or compact slotted screw terminals (detachable).**
- **Certified for CSA and EN (TÜV).**
- **The G3PF-2□□B-□□□ Series is UL certified.**

For the most recent information on models that have been certified for safety standards, refer to your OMRON website.

⚠ Refer to *Safety Precautions for All Solid State Relays* and *Safety Precautions* on page 10.

Ordering Information

■ List of Models

Input terminals	Isolation method	Zero cross function	Operation indicator	Alarm output	Applicable load (See note.)	Model
M3 terminals	Phototriac-coupler	Yes	Yes	1 output (Heater Burnout Detection, SSR Short-circuit Failure Detection, Common)	2 to 25 A, 100 to 240 VAC	**G3PF-225B**
					2 to 35 A, 100 to 240 VAC	**G3PF-235B**
					2 to 25 A, 200 to 480 VAC	**G3PF-525B**
					2 to 35 A, 200 to 480 VAC	**G3PF-535B**
Screwless clamp terminals (detachable)				2 outputs (Heater Burnout Detection, SSR Short-circuit Failure Detection)	2 to 25 A, 100 to 240 VAC	**G3PF-225B-CTB**
					2 to 35 A, 100 to 240 VAC	**G3PF-235B-CTB**
					2 to 25 A, 200 to 480 VAC	**G3PF-525B-CTB**
					2 to 35 A, 200 to 480 VAC	**G3PF-535B-CTB**
Compact slotted screw terminals (detachable)				2 outputs (Heater Burnout Detection, SSR Short-circuit Failure Detection)	2 to 25 A, 100 to 240 VAC	**G3PF-225B-STB**
					2 to 35 A, 100 to 240 VAC	**G3PF-235B-STB**
					2 to 25 A, 200 to 480 VAC	**G3PF-525B-STB**
					2 to 35 A, 200 to 480 VAC	**G3PF-535B-STB**

Note: The load current depends on the ambient temperature. Refer to *Load Current vs. Ambient Temperature* under *Engineering Data* for details.

Specifications

■ Certification

CSA 22.2 No. 14, EN 60947-4-3, UL508 (The G3PF-2□□B-□□□ Series)

■ Ratings

● Detection Power Supply

Rated power supply voltage	24 VDC
Operating voltage range	20.4 to 26.4 VDC
Current consumption	50 mA DC max. (at 24 VDC)

● Alarm Output

Output OFF collector voltage	30 VDC max.
Maximum carry current	100 mA
Output form	NPN open collector (ON when error is detected.)
Minimum load current	0.1 mA

● Operation Input

Input method	Voltage input
Rated input voltage	12 to 24 VDC
Operating input voltage range	9.6 to 26.4 VDC
Operate voltage	9.6 VDC max.
Release voltage	1.0 VDC min.
Input current	5 mA DC max. (at 12 VDC) 10 mA DC max. (at 24 VDC)

Note: If the power rise or fall time exceeds 200 ms for the detection power supply or operating input power supply, an alarm display or output may be activated by the failure detection function before the rated voltage is exceeded.
Select a DC power supply that has a power rise or fall time of 200 ms or less.

ПРОМЭЛЕКТРОНИКА / sales@prom-elec.com

● Main Circuit

Model / Item	G3PF-225B G3PF-225B-CTB G3PF-225B-STB	G3PF-235B G3PF-235B-CTB G3PF-235B-STB	G3PF-525B G3PF-525B-CTB G3PF-525B-STB	G3PF-535B G3PF-535B-CTB G3PF-535B-STB
Rated load voltage	100 to 240 VAC (50/60 Hz)		200 to 480 VAC (50/60 Hz)	
Operating voltage range	75 to 264 VAC, 50/60 Hz		180 to 528 VAC, 50/60 Hz	
Applicable load current*	25 A (at 40°C)	35 A (at 40°C)	25 A (at 40°C)	35 A (at 40°C)
Minimum load current	2 A			
Inrush current resistance	220 A (60 Hz, 1 cycle)	430 A (60 Hz, 1 cycle)	220 A (60 Hz, 1 cycle)	430 A (60 Hz, 1 cycle)

Note: The load current depends on the ambient temperature. Refer to *Load Current vs. Ambient Temperature* under *Engineering Data* for details.

■ Characteristics

Model / Item		G3PF-225B G3PF-225B-CTB G3PF-225B-STB	G3PF-235B G3PF-235B-CTB G3PF-235B-STB	G3PF-525B G3PF-525B-CTB G3PF-525B-STB	G3PF-535B G3PF-535B-CTB G3PF-535B-STB
Operate time		1/2 of load power source cycle + 1 ms max.			
Release time		1/2 of load power source cycle + 1 ms max.			
Main circuit	**Output ON voltage drop**	1.6 V (RMS) max.		1.8 V (RMS) max.	
	Leakage current	10 mA max. (at 200 VAC)		20 mA max. (at 480 VAC)	
Alarm output	**Output ON voltage drop**	1.5 V max.			
	Leakage current	1 mA max.			
Isolation resistance		100 MΩ min. (at 500 VDC)			
Dielectric strength		2,500 VAC, 50/60 Hz for 1 min.			
Vibration resistance		Destruction: 10 to 55 to10 Hz, 0.35-mm single amplitude (0.7-mm double amplitude)			
Shock resistance		Destruction: 294 m/s²			
Ambient storage temperature		−30 to 70°C (with no icing or condensation)			
Ambient operating temperature		−20 to 60°C (with no icing or condensation)			
Ambient operating humidity		45% to 85%			
Weight		Approx. 400 g	Approx. 630 g	Approx. 400 g	Approx. 630 g

Connection

■ Connection Example

G3PF-□□□B

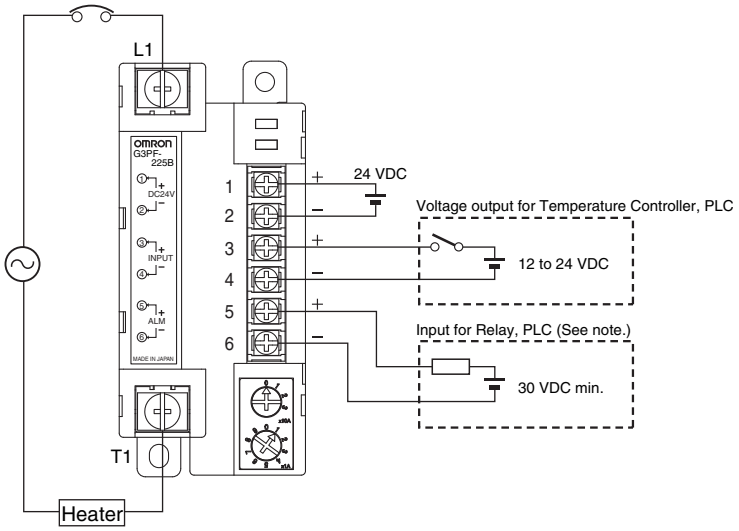

Controlled by NPN Transistor

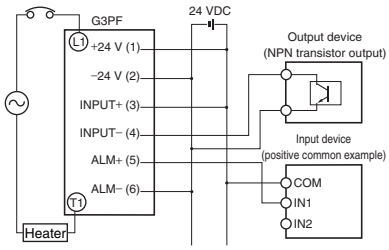

Controlled by PNP Transistor

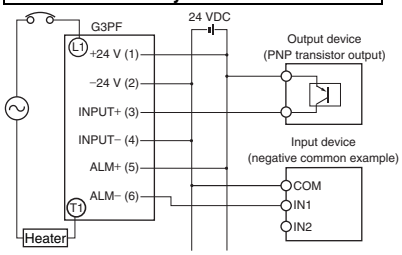

Note: With inductive loads (relay coil, etc.), connect back-current prevention diodes to both sides of the load.

G3PF-□□□B-CTB, G3PF-□□□B-STB

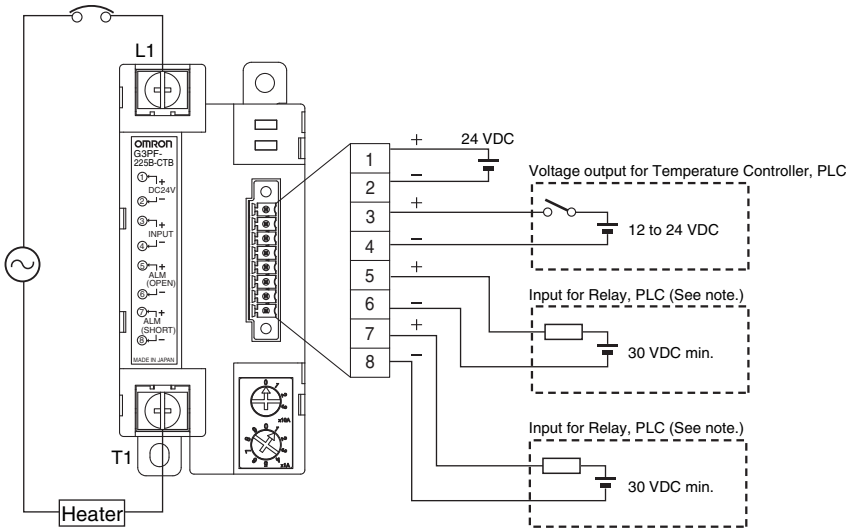

Controlled by NPN Transistor

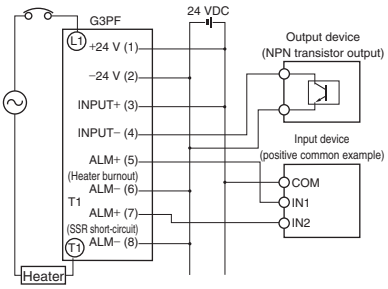

Controlled by PNP Transistor

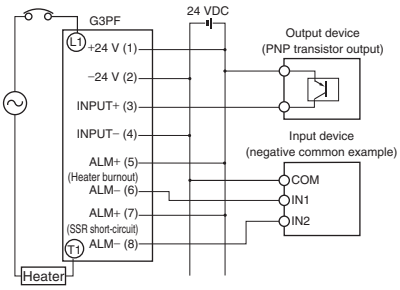

Note: With inductive loads (relay coil, etc.), connect back-current prevention diodes to both sides of the load. Terminals 5-6 output a heater burnout alarm, and terminals 7-8 output an SSR short-circuit failure alarm.

Operation

■ Error Detection Function

● Setting the Heater Burnout Detection Level

- The heater burnout detection level is set with switches on the front of the G3PF.
- Turn the switches to the current value to be detected.
  The top switch sets the tens digit, and the bottom switch sets the ones digit.
  The default settings are followings: Setting switch (top row): 0
  Setting switch (bottom row): 1

∗Example of setting 12 A
Setting switch (top row): 1
Setting switch (bottom row): 2

● Operation during an Error

Model	Condition	Alarm indicator (red)	Alarm output	
			Terminals 5-6	Terminals 7-8
G3PF-□□□B	Normal	Unlit	OFF	None
	Heater burnout, SSR open-circuit	Lit	ON	
	SSR short-circuit	Flashing		
G3PF-□□□B-CTB G3PF-□□□B-STB	Normal	Unlit	OFF	OFF
	Heater burnout, SSR open-circuit	Lit	ON	OFF
	SSR short-circuit	Flashing	OFF	ON

● Heater Burnout Detection Function

Model / Item	G3PF-□25B, G3PF-□25B-□□□	G3PF-□35B, G3PF-□35B-□□□
Detection setting range	1 to 25 A (1-A increments)	1 to 35 A (1-A increments)
Detection tolerance	±5% (±20% for a rated load current setting of 20% or less. See table at right for details.)	
Detection time	1.0 s max. (with ON/OFF control)	

Note 1. The alarm is output if the load current falls below the error detection current.
2. Take the detection tolerance into consideration in setting the error detection current. (For details, refer to the *Heater Burnout Detection Current Range* table at the right.)
3. When using cycle control, heater burnout detection is possible at a control cycle of 200 ms min. and an output duty of 50% min. (When combined with the G32A-EA, heater burnout can be detected at an output duty of 50% or higher.)
4. When using cycle control, the detection time increases in inverse proportion to the output duty.
5. When used in combination with optimal cycle control (G3ZA), the heater burnout detection function cannot be used.
6. Do not set the heater burnout detection current to 0 A. Doing so would cause constant detection of a SSR short-circuit failure when no operation input is applied. Also, settings 4 to 9 on the top setting switch are invalid. Do not set the switch to these values.
7. The heater burnout detection function cannot be disabled. If it is not needed, set it to the lowest setting (1 A).
8. When the heater burnout detection level is changed, the new value becomes effective immediately after the change. (The set value can be changed in the G3PF even during operation.)

● SSR Failure Detection

Detection level	One-half the set value for heater burnout detection
Detection time	1.0 sec max. (ON/OFF control) (See note.)

Note: When using cycle control, the detection time increases in inverse proportion to the output duty.

● Heater Burnout Detection Current Range

Setting switch		Heater burnout detection current (A)			
Top switch (tens digit)	Bottom switch (ones digit)	G3PF-□25B, G3PF-□25B-□□□		G3PF-□35B, G3PF-□35B-□□□	
		Minimum	Maximum	Minimum	Maximum
0	0	Cannot be set		Cannot be set	
0	1	0.8	1.2	0.8	1.2
0	2	1.6	2.4	1.6	2.4
0	3	2.4	3.6	2.4	3.6
0	4	3.2	4.8	3.2	4.8
0	5	4.0	6.0	4.0	6.0
0	6	5.7	6.3	4.8	7.2
0	7	6.7	7.4	5.6	8.4
0	8	7.6	8.4	7.6	8.4
0	9	8.6	9.5	8.6	9.5
1	0	9.5	10.5	9.5	10.5
1	1	10.5	11.6	10.5	11.6
1	2	11.4	12.6	11.4	12.6
1	3	12.4	13.7	12.4	13.7
1	4	13.3	14.7	13.3	14.7
1	5	14.3	15.8	14.3	15.8
1	6	15.2	16.8	15.2	16.8
1	7	16.2	17.9	16.2	17.9
1	8	17.1	18.9	17.1	18.9
1	9	18.1	20.0	18.1	20.0
2	0	19.0	21.0	19.0	21.0
2	1	20.0	22.1	20.0	22.1
2	2	20.9	23.1	20.9	23.1
2	3	21.9	24.2	21.9	24.2
2	4	22.8	25.2	22.8	25.2
2	5	23.8	26.3	23.8	26.3
2	6	Cannot be set		24.7	27.3
2	7			25.7	28.4
2	8			26.6	29.4
2	9			27.6	30.5
3	0			28.5	31.5
3	1			29.5	32.6
3	2			30.4	33.6
3	3			31.4	34.7
3	4			32.3	35.7
3	5			33.3	36.8
3 · · · 9	6 · · · 9			Cannot be set	

Nomenclature

■ G3PF-□□□B

● Terminal Arrangement

Terminal name	Terminal number	Screw size
Main circuit terminals (output)	L1, T1	M5
Detection power supply (input)	1, 2	M3
Operation input (input)	3, 4	
Alarm output terminals (output)	5, 6	

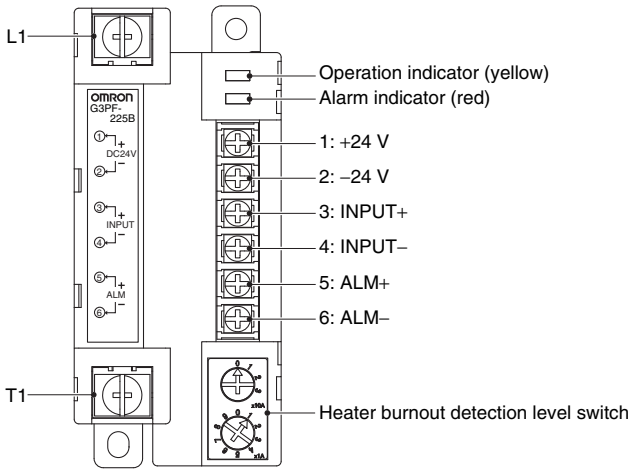

● Indicators

Name	Color	Condition	Meaning
Operation indicator	Yellow	Lit	Operating
Alarm indicator	Red	Lit	Heater burnout detection SSR open-circuit detection
		Flashing	SSR short-circuit detection

■ G3PF-□□□B-CTB, G3PF-□□□B-STB

● Terminal Arrangement

Terminal name	Terminal number	Screw size	
		G3PF-□□□B-CTB	G3PF-□□□B-STB
Main circuit terminals (output)	L1, T1	M5	M5
Operation input (input)	1, 2	Screwless clamp terminals (FK-MCP1.5/8-STF-3.5, made by Phoenix Contact)	M2 slotted screw terminals (MCVW1.5/8-STF-3.5, made by Phoenix Contact)
Detection power supply (input)	3, 4		
Heater burnout alarm output (output)	5, 6		
SSR short-circuit alarm output (output)	7, 8		

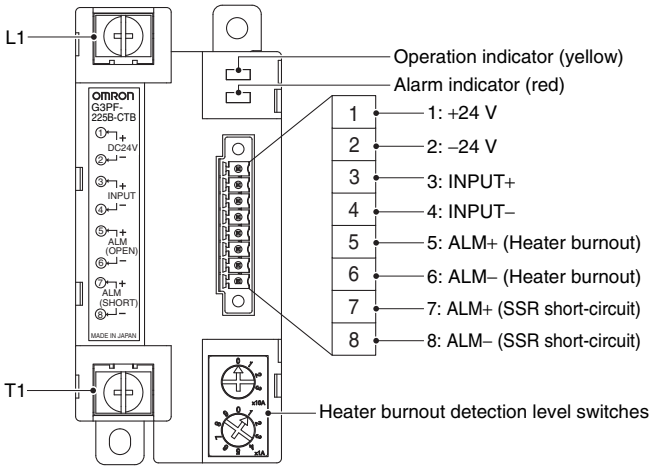

● Indicators

Name	Color	Condition	Meaning
Operation indicator	Yellow	Lit	Operating
Alarm indicator	Red	Lit	Heater burnout detection SSR open-circuit detection
		Flashing	SSR short-circuit detection

Engineering Data

● Load Current vs. Ambient Temperature

G3PF-□25B
G3PF-□25B-□TB

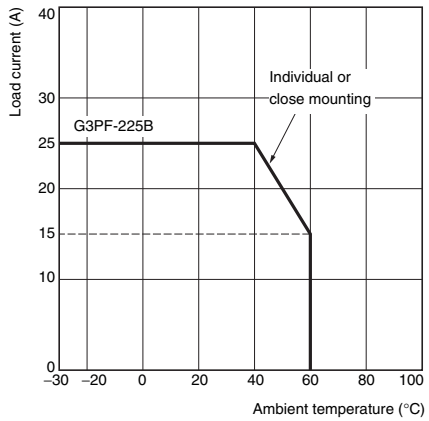

G3PF-□35B
G3PF-□35B-□TB

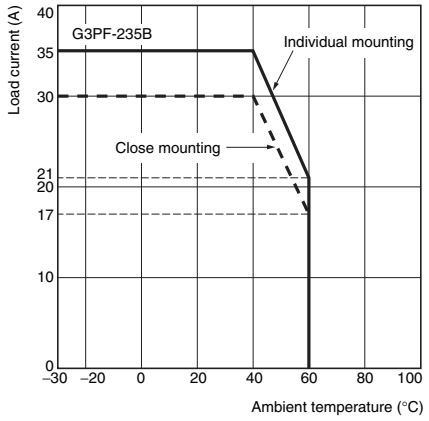

Note: The data above assumes that the Unit is mounted on a vertical surface. If it is mounted on a horizontal surface, reduce the load current shown above by 30%.

● One Cycle Surge Withstand Current

Non-repetitive input (For repetitive input, the figure will be less than the value for surge current withstand indicated by the broken line.)

G3PF-□25B
G3PF-□25B-□TB

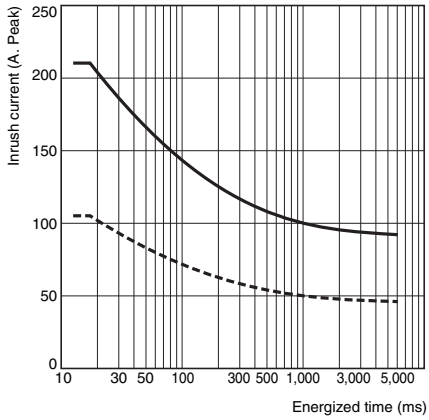

G3PF-□35B
G3PF-□35B-□TB

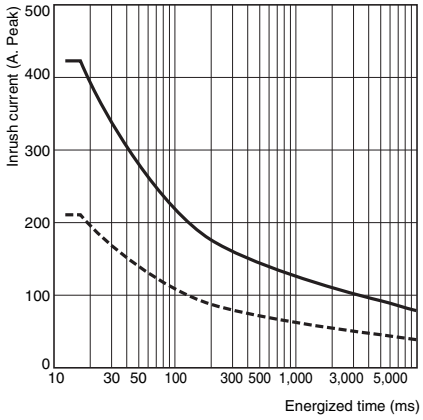

Dimensions

(Unit: mm)

■ Main unit

G3PF-□25B

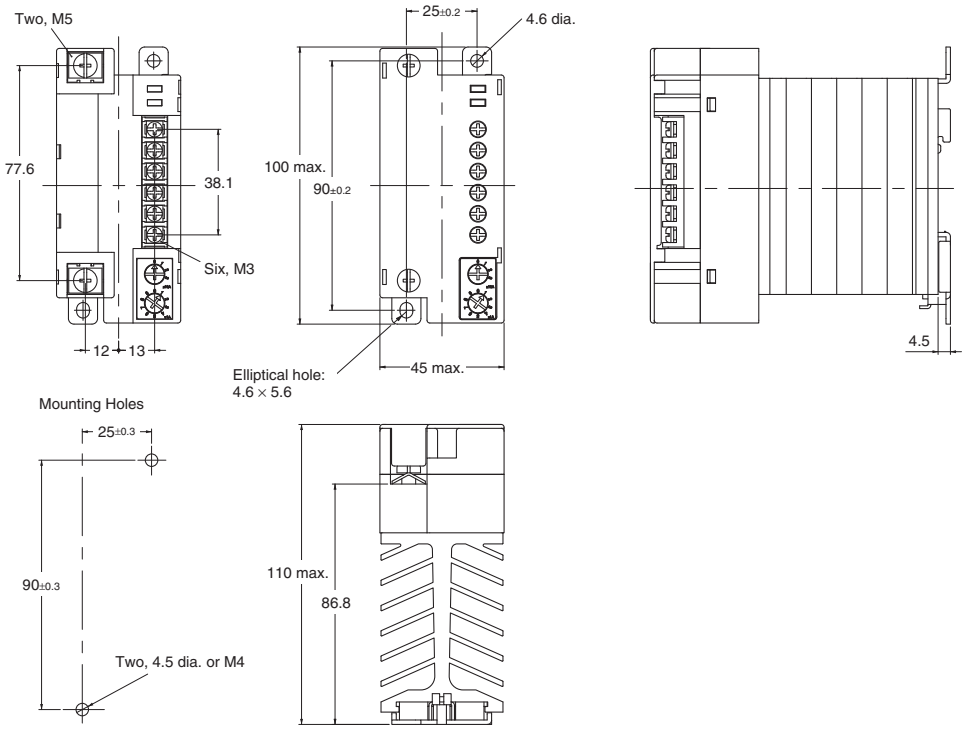

G3PF-□35B

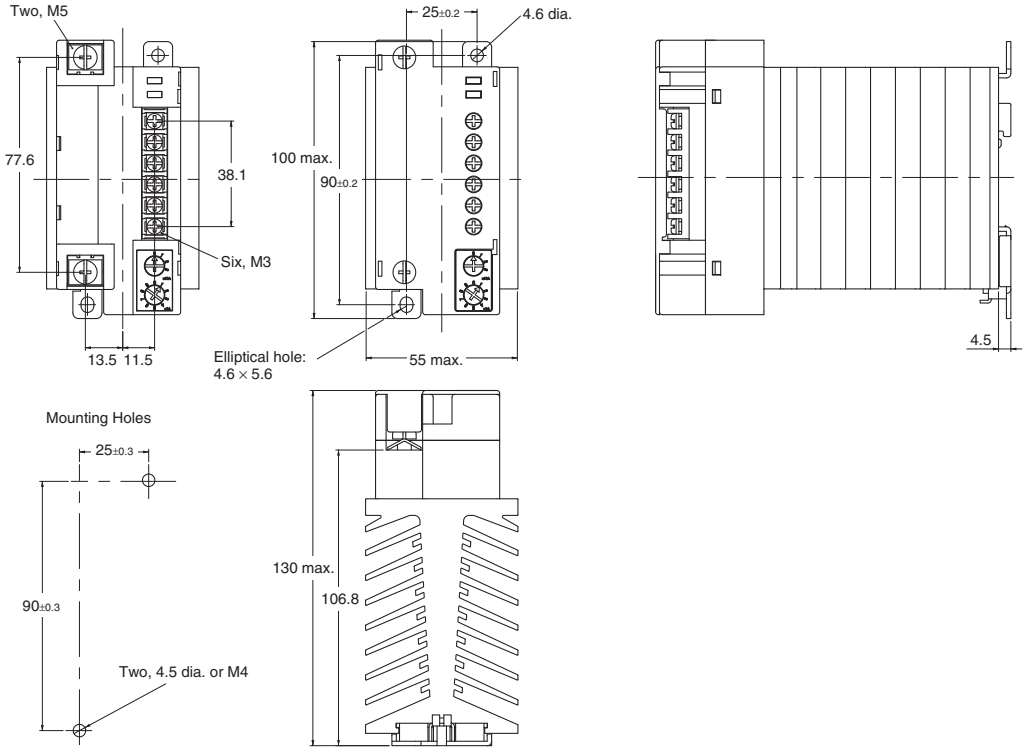

G3PF-□25B-CTB

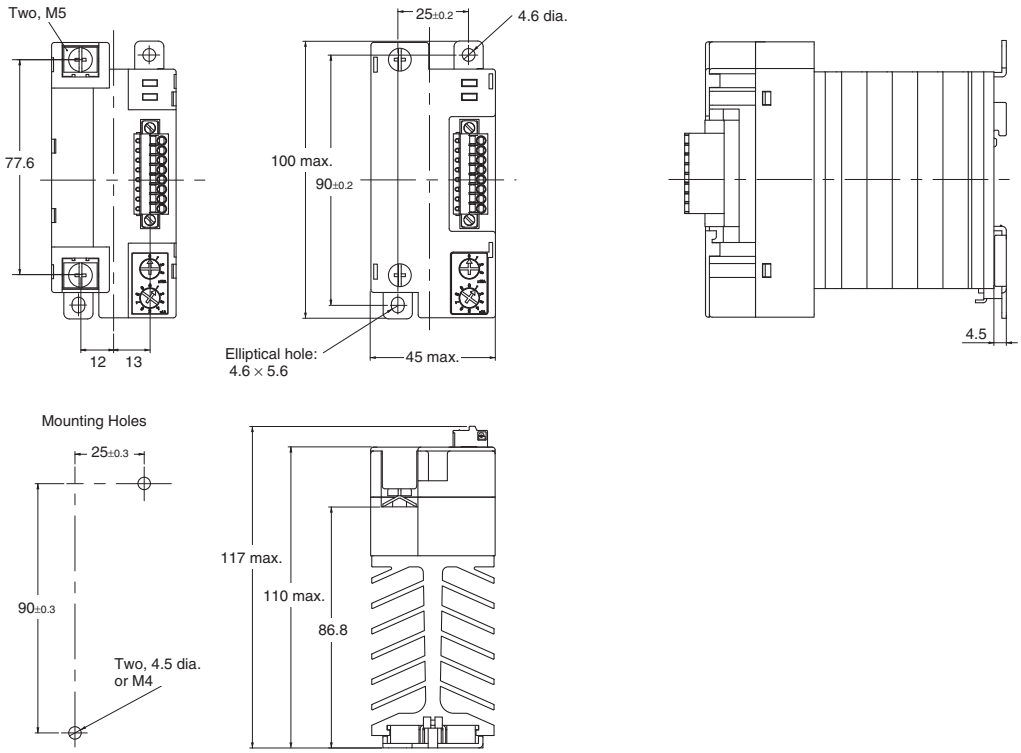

G3PF-□35B-CTB

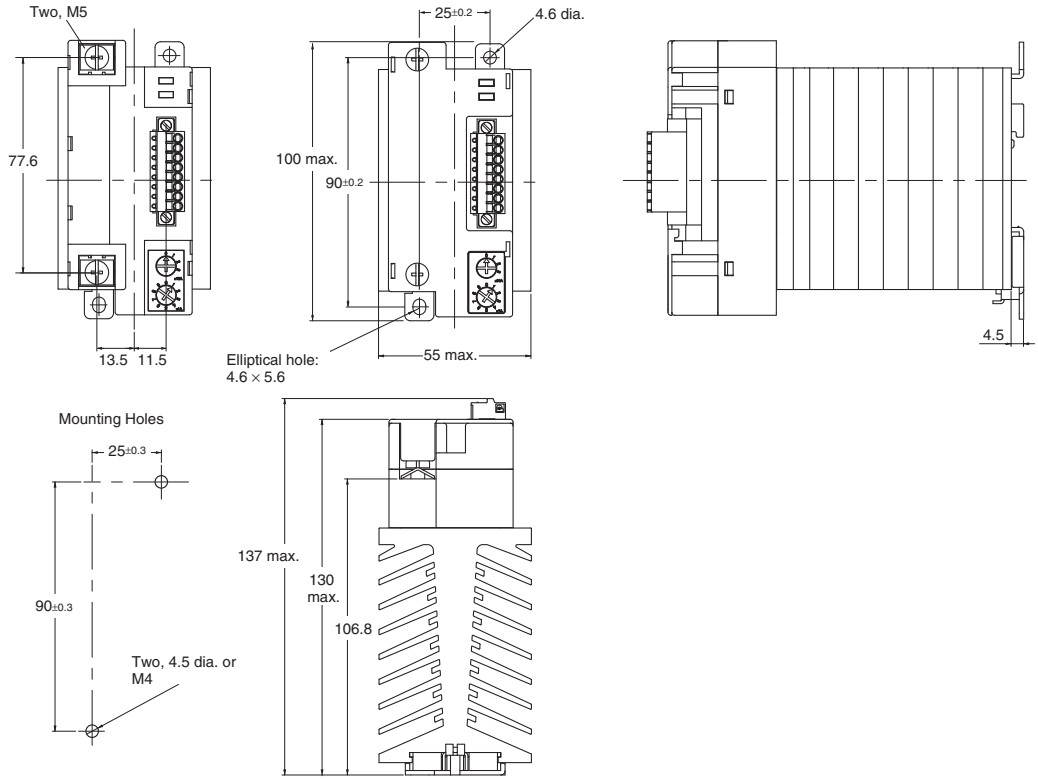

G3PF-□25B-STB

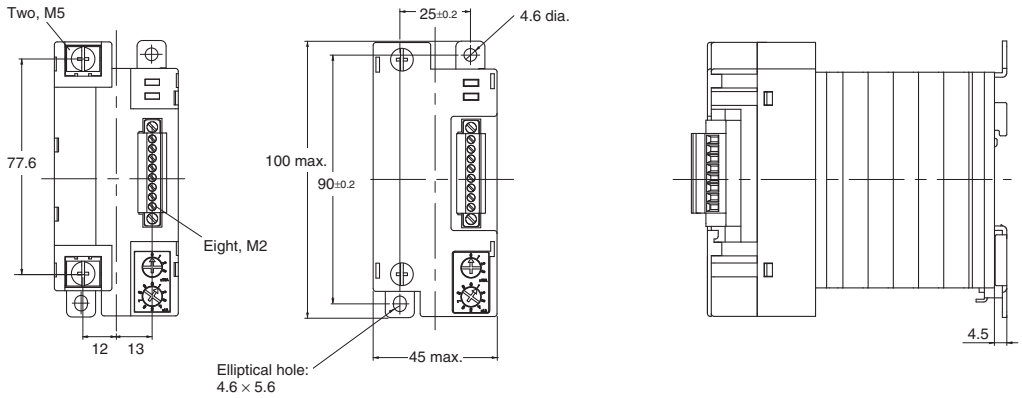

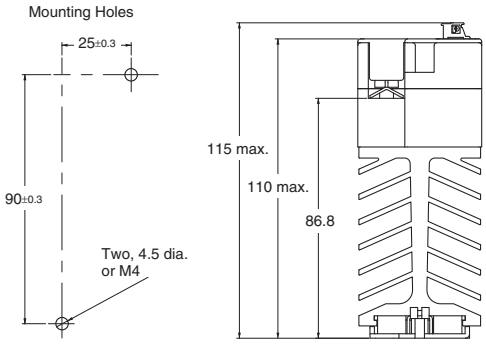

G3PF-□35B-STB

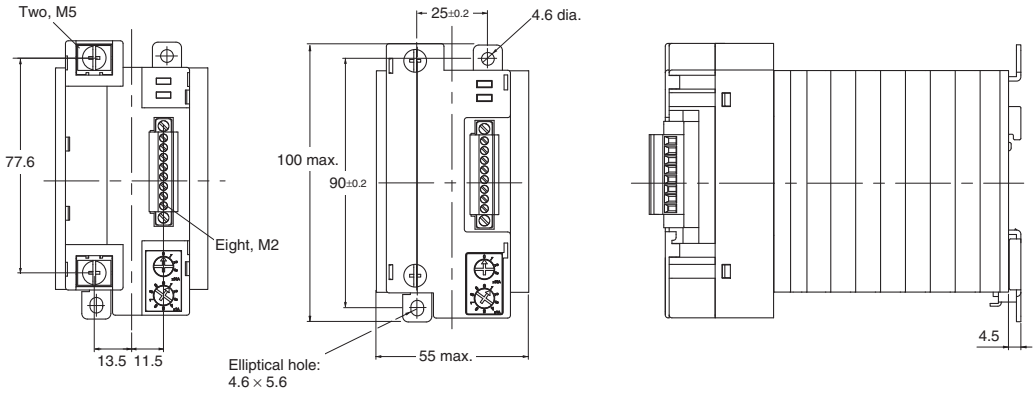

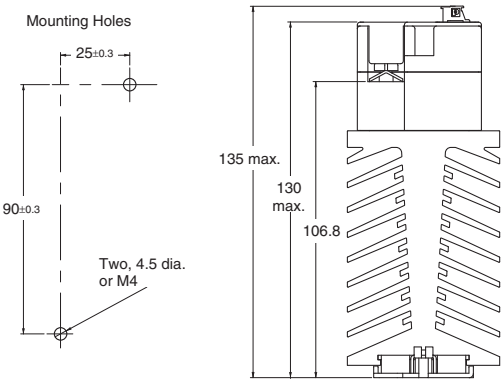

Safety Precautions

Refer to *Safety Precautions for All Solid State Relays*.

⚠ CAUTION

The G3PF may rupture if short-circuit current flows. As protection against accidents due to short-circuiting, be sure to install protective devices, such as fuses and no-fuse breakers, on the power supply side.

Minor burns may occasionally occur. Do not touch the SSR or the heat sink while the power is being supplied or immediately after the power supply has been turned OFF. The SSR and heat sink become extremely hot.

Minor electrical shock may occasionally occur. Do not touch the main circuit terminals on the SSR immediately after the power supply has been turned OFF.
Shock may result due to the electrical charge stored in the built-in snubber circuit.

Minor electrical shock may occasionally occur. Always turn OFF the power supply before performing wiring. Also, always attach the cover terminal.

Precautions for Safe Use

OMRON constantly strives to improve quality and reliability. SSRs, however, use semiconductors, and semiconductors may commonly malfunction or fail. In particular, it may not be possible to ensure safety if the SSRs are used outside the rated ranges. Therefore, always use the SSRs within the ratings. When using an SSR, always design the system to ensure safety and prevent human accidents, fires, and social harm in the event of SSR failure. System design must include measures such as system redundancy, measures to prevent fires from spreading, and designs to prevent malfunction.

(1) Operating and Storage Environments

Do not use or store the G3PF in the following locations. Doing so may result in damage, malfunction, or deterioration of performance characteristics.

1. Locations subject to corrosive or flammable gases.
2. Do not store in locations subject to ambient storage temperatures outside the range –30 to 70°C.
3. Do not use in locations subject to ambient operating temperatures outside the range –20 to 60°C.
4. Do not use in locations subject to relative humidity outside the range 25% to 85%.
5. Locations subject to high temperature or high humidity.
6. Locations subject to condensation as the result of rapid changes in temperature.
7. Locations subject to exposure to water, oil, or chemicals.
8. Locations subject to dust (especially iron dust) or salts.
9. Locations subject to rainwater or water splashes.
10. Locations subject to direct sunlight.
11. Locations subject to shock or vibration.

(2) Transport

Do not transport the G3PF under the following conditions. Doing so may result in damage, malfunction, or deterioration of performance characteristics.

1. Conditions in which the G3PF may be subject to water or oil splashes.
2. Conditions in which the G3PF may be subject to high temperature or high humidity.
3. Conditions in which the G3PF may be subject to condensation as the result of rapid changes in temperature.
4. Conditions in which the G3PF may be dropped or subject to excessive vibration or shock.
5. Conditions in which the G3PF is not packaged.

(3) Mounting

1. Do not use the G3PF if the heat radiation fins have been bent by being dropped. Doing so may result in malfunction due to a reduction in the heat radiation performance.
2. Do not block the movement of the air surrounding the SSR or heat sink.
   Abnormal heating of the SSR may result in shorting failures of the output elements or burn damage.
3. Make sure that there is no excess ambient temperature rise due to the heat generation of the G3PF. If the G3PF is mounted inside a panel, install a fan so that the interior of the panel is fully ventilated. Otherwise, shorting failures of the output elements or burn damage may result.
4. Make sure the DIN track is securely mounted. Otherwise, the G3PF may fall.
5. Do not handle the G3PF with oily or dusty (especially iron dust) hands. Doing so may result in malfunction.
6. Mount the G3PF in the specified direction (on a vertical or horizontal surface). Otherwise excessive heat generated by the G3PF may cause short-circuit failures of the output elements or burn damage.

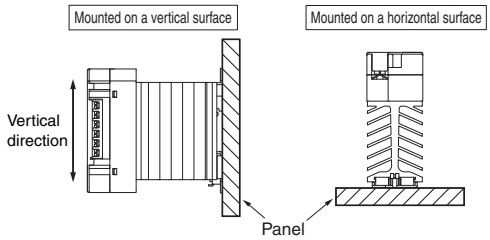

7. When mounting the G3PF to a control panel or other fixture with screws, be sure to tighten the screws to a torque of 0.98 to 1.47 N·m. A lower level of tightening torque may cause the G3PF to fall.
8. Do not drop the G3PF or subject it to excessive vibration or shock. Doing so may result in damage, malfunction, or deterioration of performance characteristics.

(4) Wiring

1. Use wires that are thick enough for the load current. Otherwise, excessive heat generated by the wire may cause burning.

Tightening torque	M2: 0.22 to 0.28 N·m
	M3: 0.4 to 0.56 N·m
	M5: 1.57 to 2.35 N·m
Control connector mounting torque (detachable terminal)	0.25 to 0.3 N·m

2. When tightening terminal screws, prevent any non-conducting material from becoming caught between the screws and the tightening surface. Otherwise, excessive heat generated by the terminal may cause burning.
3. Use wires that are suited to the load current and voltage. Otherwise, excessive heat generated by the wires may cause burning, or the outer covering of the wire may melt, resulting in electrical shock or ground fault.
4. Use a crimp terminal size that is suited to the diameter of the wire. Otherwise, it may result in burning, or the outer covering of the wire may melt, resulting in electrical shock or ground fault.

5. Do not use wires with a damaged outer covering. Otherwise, it may result in electric shock or ground leakage.
6. Do not wire any wiring in the same duct or conduit as power or high-tension lines. Otherwise, inductive noise may damage the G3PF or cause it to malfunction.

(5) Adjustment and Use

Do not adjust or use the G3PF under the following conditions. Doing so may result in damage, malfunction, or burning.

1. Conditions in which voltage or current exceeding the rated values is applied to the input or output terminals.
2. Conditions in which a load exceeding the rated range is selected or used.
3. Conditions in which a power supply frequency other than the rated frequency is selected or used.

(6) Failure Detection

If the G3PF control circuit or alarm output circuit should malfunction, the failure detection function and output will not operate normally. To protect against this possibility, it is recommended that the design includes redundant safety functions.

(7) Noise and Surge Effects

If noise or an electrical surge occurs that exceeds the malfunction withstand limit for the G3PF output circuit, the output will turn ON for a maximum of one half cycle to absorb the noise or surge. Confirm that turning the output ON for a half cycle will not cause a problem for the device or system in which the G3PF is being used prior to actual use. The G3PF malfunction withstand limit is shown below.

- Malfunction withstand limit (reference value): 500 V

Note: This value was measured under the following conditions.
Noise duration: 100 ns and 1 μs
Repetition period: 100 Hz
Noise application time: 3 min

Precautions for Correct Use

The SSR in operation may cause an unexpected accident. Therefore it is necessary to test the SSR under the variety of conditions that are possible. As for the characteristics of the SSR, it is necessary to consider differences in characteristics between individual SSRs.
The ratings in this catalog are tested values in a temperature range between 15°C and 30°C, a relative humidity range between 25% and 85%, and an atmospheric pressure range between 88 and 106 kPa. It will be necessary to provide the above conditions as well as the load conditions if the user wants to confirm the ratings of specific SSRs.

(1) Solvents

Do not allow the resin parts of the G3PF to come in contact with solvents, such as alcohol, thinner, trichloroethane, or gasoline. Doing so will dissolve markings and may result in deteriorating the performance of the parts.

(2) Oil

Do not allow the terminal cover of the G3PF to come in contact with oil. Doing so may cause the cover to become cloudy or to crack.

(3) Mounting

Do not drop the G3PF or subject it to excessive vibration. Doing so may result in damage, malfunction, or deterioration of performance characteristics.

(4) Mounting Interval (Panel Mounting)

Note: When close mounting, check *Load Current vs. Ambient Temperature* under *Engineering Data*.

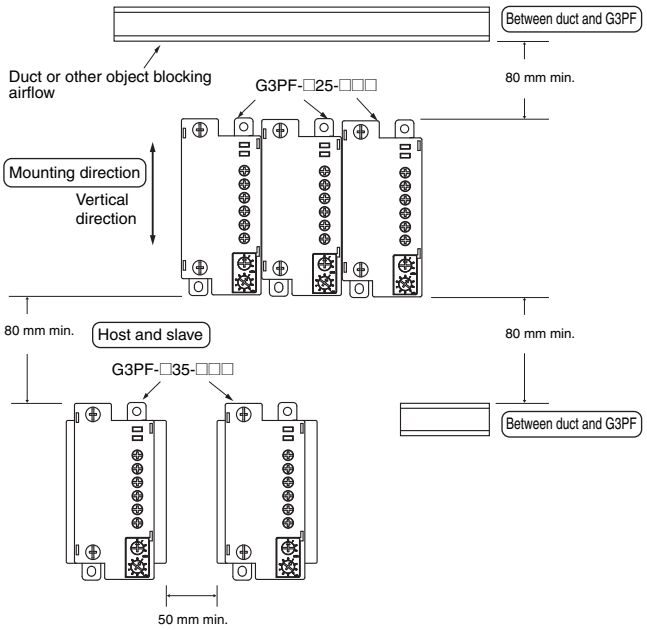

(5) G3PF and Duct (or Other Object Blocking Airflow) Relationship

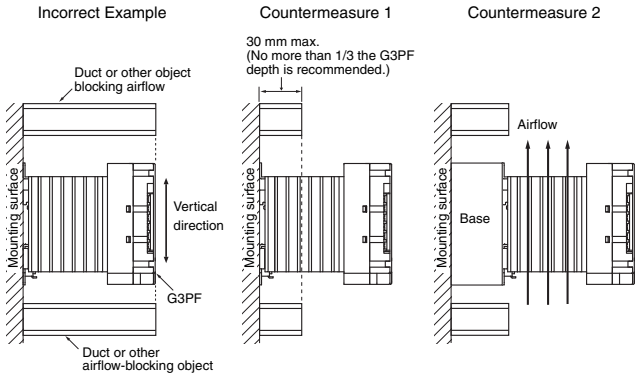

If the depth direction of the G3PF is obstructed by ducts, the heat radiation will be adversely affected.

Use ducts that have a shallow depth, to provide a sufficient ventilation area.

If the ducts cannot be made lower, place the G3PF on a metal base so that it is not surrounded by the ducts.

(6) Ventilation Outside the Control Panel

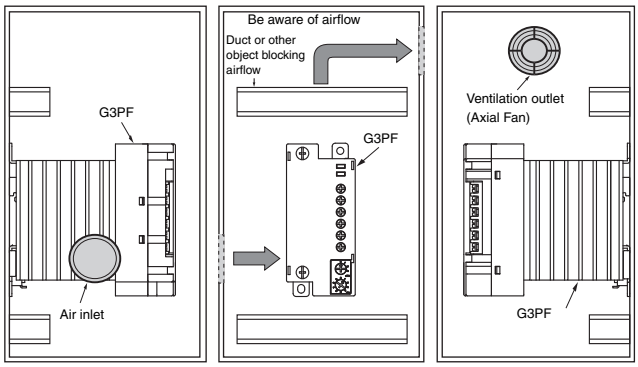

Note 1. If the air inlet or air outlet has a filter, clean the filter regularly to prevent it from clogging to ensure an efficient flow of air.
2. Do not locate any objects around the air inlet or air outlet, otherwise the objects may obstruct the proper ventilation of the control panel.
3. A heat exchanger, if used, should be located in front of the G3PF to ensure the efficiency of the heat exchanger.

(7) G3PF Ambient Temperature
The rated current of the G3PF is measured at an ambient temperature of 40°C.

(8) The G3PF uses a semiconductor to switch the load. This causes the temperature inside the control panel to increase due to heating resulting from the flow of electrical current through the load. G3PF reliability can be increased by adding a ventilation fan to the control panel to dispel this heat, thus lowering the ambient temperature of the G3PF.
(Arrhenius's law suggests that life expectancy is doubled by each 10°C reduction in ambient temperature.)

G3PF rated current (A)	25 A	35 A
Required number of fans per G3PF	0.4	0.54

Example: For 10 G3PF SSRs with load currents of 35 A,
$0.54 \times 10 = 5.40$
Thus, 6 fans would be required.

Note 1. Size of fans: 92 mm^2, Air volume: 0.7 m^3/min, Ambient temperature of control panel: 30°C
2. If there are other instruments that generate heat in the control panel in addition to SSRs, more ventilation will be required.
3. Ambient temperature: The temperature that will allow the SSR to cool by convection or other means.

(9) Fuse
Use one of the following fast-blowing fuses or the equivalent for short-circuit protection.

Recommended Fuses

Rated current of G3PF	Applicable SSR	Fuse (IEC 60269-4)
25 A	G3PF-□25B	32 A
35 A	G3PF-□35B	63 A

(10) Using IEC Class I Devices
Always ground all metal parts. If you mount Relays on DIN Tracks, ground the DIN Tracks. Alternatively you can connect to a terminal block that meets IEC 60947-7-2 or equivalent standards for the same purpose.

(11) EMC
The following conditions have been met for EMC.
- Connect a capacitor to the loadÅfs power supply.
- Connect a power cable that is no longer than 3 m to the input and alarm output sections.

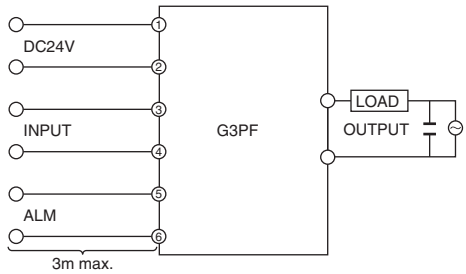

Recommended capacitor: 1 μF, 250 VAC for the G3PF-2□□B, and 0.5 μF, 500 VAC for the G3PF-5□□B

(12) EMI
This is a Class A product (for industrial environments).
In a residential environment, the G3PF may cause radio interference, in which case the user may be required to take appropriate measures.

Terms and Conditions Agreement

Read and understand this catalog.
Please read and understand this catalog before purchasing the products. Please consult your OMRON representative if you have any questions or comments.

Warranties.
(a) Exclusive Warranty. Omron's exclusive warranty is that the Products will be free from defects in materials and workmanship for a period of twelve months from the date of sale by Omron (or such other period expressed in writing by Omron). Omron disclaims all other warranties, express or implied.
(b) Limitations. OMRON MAKES NO WARRANTY OR REPRESENTATION, EXPRESS OR IMPLIED, ABOUT NON-INFRINGEMENT, MERCHANTABILITY OR FITNESS FOR A PARTICULAR PURPOSE OF THE PRODUCTS. BUYER ACKNOWLEDGES THAT IT ALONE HAS DETERMINED THAT THE
PRODUCTS WILL SUITABLY MEET THE REQUIREMENTS OF THEIR INTENDED USE.
Omron further disclaims all warranties and responsibility of any type for claims or expenses based on infringement by the Products or otherwise of any intellectual property right. (c) Buyer Remedy. Omron's sole obligation hereunder shall be, at Omron's election, to (i) replace (in the form originally shipped with Buyer responsible for labor charges for removal or replacement thereof) the non-complying Product, (ii) repair the non-complying Product, or (iii) repay or credit Buyer an amount equal to the purchase price of the non-complying Product; provided that in no event shall Omron be responsible for warranty, repair, indemnity or any other claims or expenses regarding the Products unless Omron's analysis confirms that the Products were properly handled, stored, installed and maintained and not subject to contamination, abuse, misuse or inappropriate modification. Return of any Products by Buyer must be approved in writing by Omron before shipment. Omron Companies shall not be liable for the suitability or unsuitability or the results from the use of Products in combination with any electrical or electronic components, circuits, system assemblies or any other materials or substances or environments. Any advice, recommendations or information given orally or in writing, are not to be construed as an amendment or addition to the above warranty.
See http://www.omron.com/global/ or contact your Omron representative for published information.

Limitation on Liability; Etc.
OMRON COMPANIES SHALL NOT BE LIABLE FOR SPECIAL, INDIRECT, INCIDENTAL, OR CONSEQUENTIAL DAMAGES, LOSS OF PROFITS OR PRODUCTION OR COMMERCIAL LOSS IN ANY WAY CONNECTED WITH THE PRODUCTS, WHETHER SUCH CLAIM IS BASED IN CONTRACT, WARRANTY, NEGLIGENCE OR STRICT LIABILITY.
Further, in no event shall liability of Omron Companies exceed the individual price of the Product on which liability is asserted.

Suitability of Use.
Omron Companies shall not be responsible for conformity with any standards, codes or regulations which apply to the combination of the Product in the Buyer's application or use of the Product. At Buyer's request, Omron will provide applicable third party certification documents identifying ratings and limitations of use which apply to the Product. This information by itself is not sufficient for a complete determination of the suitability of the Product in combination with the end product, machine, system, or other application or use. Buyer shall be solely responsible for determining appropriateness of the particular Product with respect to Buyer's application, product or system. Buyer shall take application responsibility in all cases.
NEVER USE THE PRODUCT FOR AN APPLICATION INVOLVING SERIOUS RISK TO LIFE OR PROPERTY OR IN LARGE QUANTITIES WITHOUT ENSURING THAT THE SYSTEM AS A WHOLE HAS BEEN DESIGNED TO ADDRESS THE RISKS, AND THAT THE OMRON PRODUCT(S) IS PROPERLY RATED AND INSTALLED FOR THE INTENDED USE WITHIN THE OVERALL EQUIPMENT OR SYSTEM.

Programmable Products.
Omron Companies shall not be responsible for the user's programming of a programmable Product, or any consequence thereof.

Performance Data.
Data presented in Omron Company websites, catalogs and other materials is provided as a guide for the user in determining suitability and does not constitute a warranty. It may represent the result of Omron's test conditions, and the user must correlate it to actual application requirements. Actual performance is subject to the Omron's Warranty and Limitations of Liability.

Change in Specifications.
Product specifications and accessories may be changed at any time based on improvements and other reasons. It is our practice to change part numbers when published ratings or features are changed, or when significant construction changes are made. However, some specifications of the Product may be changed without any notice. When in doubt, special part numbers may be assigned to fix or establish key specifications for your application. Please consult with your Omron's representative at any time to confirm actual specifications of purchased Product.

Errors and Omissions.
Information presented by Omron Companies has been checked and is believed to be accurate; however, no responsibility is assumed for clerical, typographical or proofreading errors or omissions.

2015.10

In the interest of product improvement, specifications are subject to change without notice.

OMRON Corporation
Industrial Automation Company

http://www.ia.omron.com/

(c)Copyright OMRON Corporation 2015 All Right Reserved.

Mouser Electronics

Authorized Distributor

Click to View Pricing, Inventory, Delivery & Lifecycle Information:

Omron:
G3PF-225B DC24 G3PF-235B-STB DC24 G3PF-225B-STB DC24 G3PF-225B-CTB DC24 G3PF-525B-STB DC24 G3PF-235B-CTB DC24 G3PF-235B DC24 G3PF-525B DC24 G3PF-535B-CTB DC24 G3PF-535B-STB DC24 G3PF-525B-CTB DC24 G3PF-535B DC24