INDUCTIVE SENSOR
SMART
IDWE-M8MP-NMS-A0

HOUSING	OPERATING DISTANCE	MOUNTING
M8	0 … 4 mm	Embeddable

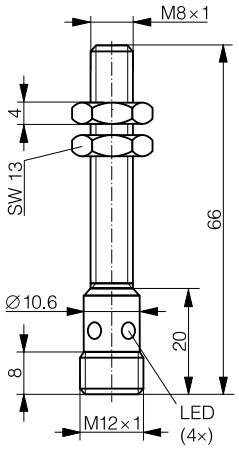

IDWE-M8MP-NMS-A0

DETECTION DATA		INTERFACE	
Sensing distance	110% S_d	Output on pin 4	SIO Selectable / IO-Link
Operating distance (S_d)	See table “Available types” (p. 2)	Output on pin 2	SIO Selectable
Temperature drift (0 … 0.8 S_d)	≤ 10 % S_d	Output Polarity	PNP
		IO-Link	✓
		MTTF (@40˚C)	-

ELECTRICAL DATA		MECHANICAL DATA	
Supply voltage range (U_B)	18…30 VDC (IO-Link) / 10…30 VDC (SIO)	Mounting	See table “Available types” (p. 2)
Residual ripple	≤ 20% U_B	Housing material	Chrome-plated Nickel Silver
Output current	≤ 200 mA	Sensing face material	PBTP
Output voltage drop	≤ 2.0 VDC	Max. tightening torque	See “Installation conditions” (p. 2)
Power consumption (no-load)	≤ 20 mA	Ambient operating temperature	–25 … +70°C[1]
Residual current	≤ 0.1 mA	Enclosure rating	IP67
Max. sampling rate& Max. Sw. freq.	1,000 Hz, 125 Hz	Weight (cable / connector)	See table “Available types” (p. 2)
Short-circuit protection	✓	Shock and vibration	IEC 60947-5-2 / 7.4
Voltage reversal protection	✓		
Cable length max.	≤ 20 m (IO-Link) / ≤ 300 m (SIO)		

Note: all data measured according to IEC 60947-5-2 standard with U_B = 20 … 30 VDC, T_A = 23°C ± 5°C.

[1] Maximum temperature according to UL: 70°C.

ПРОМЭЛЕКТРОНИКА / sales@prom-elec.com

RESPONSE CURVE (NON-FLUSH MOUNTING)

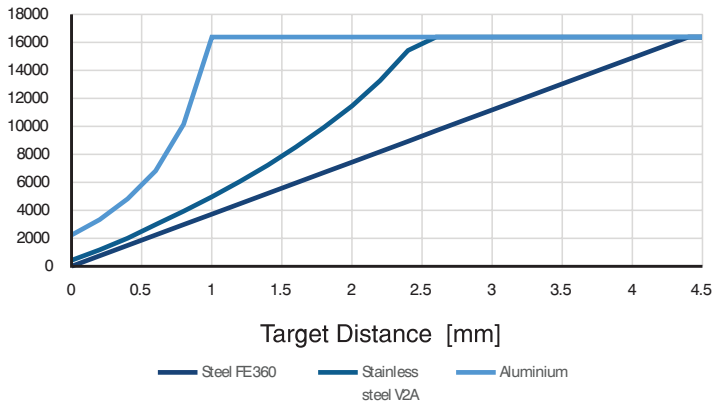

INSTALLATION CONDITIONS / MAXIMUM TIGHTENING TORQUE

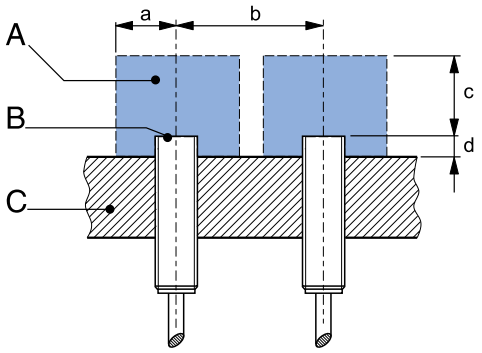

A : metal free zone
B : sensing face
C : support

	a	b	c	d	Max. Tightening Torque
IDWE-M8MP-NMS-A0	8	16	12	0	8 Nm (2.5 Nm first 10 mm)

Note: additional installation information can be found in the glossary of the Contrinex General Catalog.

WIRING DIAGRAM

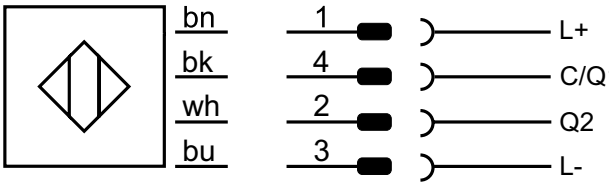

PIN ASSIGNMENT

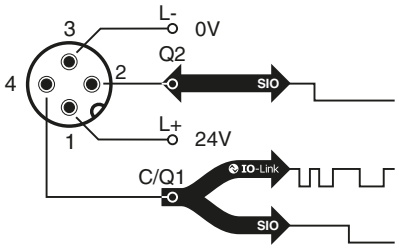

IO-LINK CHARACTERISTICS	VALUE FOR IDWx-MxxMP-NMS-A0
Vendor ID	0156_h
Device ID	320101_h
IO-Link Protocol	1.1
SIO-Mode	Supported
Process data	4 bytes input / 1 bytes output
Baudrate	COM2 (38.4 kBaud)
Minimum cycle time	4 ms

IODD files may be downloaded from
www.contrinex.com/product-range/inductive-sensors/
Select the product name to display the product page with corresponding downloads.

AVAILABLE TYPES All the below specifications were obtained with a $3 \cdot S_d \times 3 \cdot S_d \times 1$ mm³, FE 360 standard target

Part number	Part reference	S_d	Mounting	Repeat accuracy	Resolution (@0.67·S_d) Static	Resolution (@0.67·S_d) Dynamic	Linearity	Weight
330-020-494	IDWE-M8MP-NMS-A0	0…4 mm	Embeddable	< 6 μm(1) / 50 μm(2)	< 5 μm(3)	< 15 μm(3)	± 30 μm(4)	20 g

(1) measured under 3σ confidence level (99.7%) at 0.33 S_d, constant temperature and constant voltage supply
(2) measured under 3σ confidence level (99.7%) at 0.67 S_d, constant temperature and constant voltage supply
(3) measured under σ confidence level (RMS value) at 0.67 S_d, constant temperature and constant voltage supply
(4) measured under a range condition from 5% to 95% S_d, constant temperature and constant voltage supply

Note: part reference may include additional suffix to indicate a revision version or special version. Further information is available on request.

CONFIGURATION PARAMETER (IO-LINK / SIO MODE)

Index	Sub Hex	Name	Access	Data Type	Value	Default
SYSTEM						
02_h	00_h	Standard Command[1]	W	uint8	05_h = ParamDownloadStore, 40_h = Teach Apply, 41_h = Single Value Teach SP1, 42_h = Single Value Teach SP2, 43_h = Two Value Teach for SP1 → TP1, 44_h = Two Value Teach for SP1 → TP2, 45_h = Two Value Teach for SP2 → TP1, 46_h = Two Value Teach for SP2 → TP2, 47_h = Dynamic Start SP1, 48_h = Dynamic Stop SP1, 49_h = Dynamic Start SP2, $4A_h$ = Dynamic Stop SP2, $4F_h$ = Teach Cancel, 80_h = Device Reset, 82_h = Restore Factory Settings, $A0_h$= Locate Device, $A1_h$ = Clear MHM BIN	N/A
DATA STORAGE						
03_h	01_h	DS_Command[1]	R/W	uint8	00_h: Reserved 01_h: DS_UploadStart 02_h: DS_UploadEnd 03_h: DS_DownloadStart 04_h: DS_DownloadEnd 05_h: DS_Break 06_h – FF_h: Reserved	N/A
	02_h	State_Property[1]	R	uint8	Bit 0: Reserved Bit 1 and 2: State of Data Storage (00_h: Inactive, 01_h: Upload, 02_h: Download, 03_h: Data Storage Locked) Bit 3 to 6: Reserved Bit 7: DS_UPLOAD_FLAG (00_h: no DS_UPLOAD_FLAG, 01_h: DS_UPLOAD_REQ pending)	N/A
	03_h	Data_Storage_Size	R	uint32	FF_h	N/A
	04_h	Parameter_Checksum	R	uint32	–	N/A
	05_h	Index_List	R	array of byte	–	N/A
DEVICE ACCESS LOCKS						
$0C_h$	–	Device Access Lock	R/W	uint16	Parameter Access, Data Storage, Local Parametrization and Local User Interface Locks	0000_h
PROFILE PARAMETER						
$0D_h$	–	Profile Characteristic	R	uint16	<ProfileID1>, <ProfileID2>, <ProfileID3>, <FCID>	–
PD DESCRIPTOR						
$0E_h$	–	PD Input Descriptor	R	array	<DataType><TypeLength><BitOffset>	–
$0F_h$	–	PD Output Descriptor	R	array	<DataType><TypeLength><BitOffset>	–
FUNCTION CLASS – IDENTIFICATION (8000_h)						
10_h	–	Vendor Name	R	char [16]	"Contrinex"	–
11_h	–	Vendor Text	R	char [32]	"www.contrinex.com"	–
12_h	–	Product Name	R	char [32]	-	–
13_h	–	Product ID	R	char [16]	XXX-XXX-XXX	–
14_h	–	Product Text	R	char [32]	-	–
15_h	–	Serial Number	R	char [16]	123456	–
16_h	–	Hardware Revision	R	char [16]	1.0.0	–
17_h	–	Firmware Revision	R	char [16]	1.0.0	–
18_h	–	Application Specific Tag	R/W	char [32]	<user string, 32 bytes (variable length)>	<vendor specific>
FUNCTION CLASS – DIAGNOSIS (8003_h)						
24_h	00_h	Device Status[1]	R	uint8	0 = Device is OK, 1 = Maintenance required, 2 = Out of specification, 3 = Functional check, 4 = Failure, 5…255 Reserved	–
25_h	00_h – 03_h	Detailed Device Status[1]	R	uint8 [3]	–	–

[1] This parameter is stored in a volatile memory

FUNCTION CLASS – TEACH-IN CHANNEL SELECT (8004_h)						
$3A_h$	–	Teach Select[1]	R/W	uint8	00_h: Default (SSC1) 01_h: SSC1 02_h: SSC2 FF_h: ALL SSC	00_h
FUNCTION CLASS – TEACH STATUS (8007_h TO 8009_h)						
$3B_h$	01_h	Teach State[1]	R	bool[4]	00_h: Idle 01_h: SP1 Success 02_h: SP2 Success 03_h: SP12 Success 04_h: Wait for command 05_h: Busy 06_h: Reserved 07_h: Error $08_h \ldots 12_h$: Reserved	00_h
	02_h	Flag SP1 → TP1[1]	R	bool	00_h: Teach point not taught or not successful 01_h: Teach point successfully taught	00_h
	03_h	Flag SP1 → TP2[1]	R	bool	00_h: Teach point not taught or not successful 01_h: Teach point successfully taught	00_h
	04_h	Flag SP2 → TP1[1]	R	bool	00_h: Teach point not taught or not successful 01_h: Teach point successfully taught	00_h
	05_h	Flag SP2 → TP2[1]	R	bool	00_h: Teach point not taught or not successful 01_h: Teach point successfully taught	00_h
SCU – SENSOR CONFIGURATION UNIT						
40_h	01_h	Measurement Startup Time	R/W	uint16	0 … 65535 ms	0000_h
	02_h	Measurement Value Source	R/W	uint8	00_h: Distance (VTARGET) 01_h: Counter 02_h: Temperature	00_h
	03_h	Measurement value filter	R/W	uint8	00_h: Fast (1 kHz) 02_h: Standard (250 Hz) 20_h: Fine (14 Hz)	02_h
SSC1 PARAMETER						
$3C_h$	01_h	Setpoint 1	R/W	uint32	Recommended value: (2234 … 14894 = 15% S_d to 100% S_d)	14894 100% S_d
	02_h	Setpoint 2	R/W	uint32	Recommended value: (2234…14894 = 15% S_d to 100% S_d), but must be lower than Setpoint 1. N/A if Single-Point mode is selected.	0 0% S_d
SSC1 CONFIGURATION						
$3D_h$	01_h	Logic	R/W	uint8	00_h: High active 01_h: Low active	00_h
	02_h	Mode	R/W	uint8	00_h: Deactivated 01_h: Single Point 02_h: Window Mode 03_h: Two Points	01_h
	03_h	Hysteresis Width	R/W	uint32	0 … 16384 (e.g. If SSC1 Configuration Mode = Single Point, SP1 = 50% Sd = 7447, Hysteresis Width = 10% of Sd = 1488)	1488 9.99% of S_d
SSC2 PARAMETER						
$400C_h$	01_h	Setpoint 1	R/W	uint32	Recommended value: (2234 … 14894 = 15% S_d to 100% S_d)	11916 80% S_d
	02_h	Setpoint 2	R/W	uint32	Recommended value: (2234…14894 = 15% S_d to 100% S_d), but must be lower than Setpoint 1. N/A if Single-Point mode is selected.	0 0% S_d

[1] This parameter is stored in a volatile memory

SSC2 CONFIGURATION						
$400D_h$	01_h	Logic	R/W	uint8	00_h: High active 01_h: Low active	00_h
	07_h	Mode	R/W	uint8	00_h: Deactivated 01_h: Single Point 02_h: Window Mode 03_h: Two Points	01_h
	08_h	Hysteresis Width	R/W	uint32	0 … 16384 (e.g. If SSC2 Configuration Mode = Single Point, SP1 = 50% Sd = 7447, Hysteresis Width = 10% of Sd = 1488)	1488 9.99% of S_d

HYSTERESIS WIDTH RECOMMENDED BY CONTRINEX

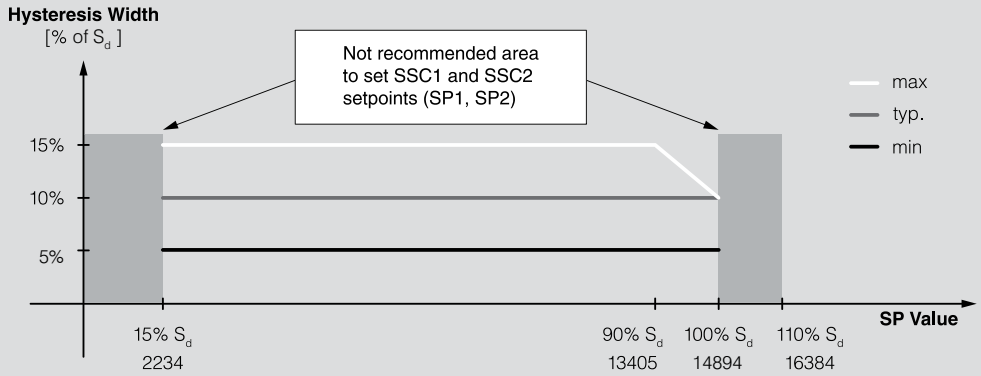

If Single-Point Mode
hysteresis width = x % of S_d

If Window Mode
hysteresis width = x % of S_d

If Two-Point Mode
hysteresis width is not applicable

OSS CONFIGURATION						
42_h	01_h	OSS1 Logic – Sensor Physical Output 1 Logic (PIN4) when used in SIO mode	R/W	uint8	0 = OUTPUT: High active (NO) 1 = OUTPUT: Low active (NC) 2 = OUTPUT: ON 3 = OUTPUT: OFF	00_h
	02_h	OSS2 Logic – Sensor Physical Output 2 Logic (PIN2) when used in SIO mode	R/W	uint8	0 = OUTPUT: High active (NO) 1 = OUTPUT: Low active (NC) 2 = OUTPUT: ON 3 = OUTPUT: OFF 4 = INPUT 5 = INPUT-TRIGGER Single Value Teach	00_h
	03_h	OSS1 Condition – Sensor Physical Output 1 Condition (PIN4) when used in SIO mode	R/W	uint8	0 = OSS1_A1 1 = OSS1_A1 AND OSS1_A2 2 = OSS1_A1 OR OSS1_A2 3 = OSS1_A1 XOR OSS1_A2	00_h
	04_h	OSS2 Condition – Sensor Physical Output 2 Condition (PIN2) when used in SIO mode	R/W	uint8	0 = OSS2_A1 1 = OSS2_A1 AND OSS2_A2 2 = OSS2_A1 OR OSS2_A2 3 = OSS2_A1 XOR OSS2_A2	00_h
	05_h	OSS1 Source A1 – Sensor Physical Output 1 Souce A1 (PIN4) when used in SIO mode	R/W	uint8	0 = SSC1 1 = SSC2 2 = TSSP 3 = ALR1 4 = ALR2 5 = ALR3 6 = INPUT[1] 7 = Not INPUT[1]	00_h
	06_h	OSS1 Source A2 – Sensor Physical Output 1 Source A2 (PIN4) when used in SIO mode	R/W	uint8	0 = SSC1 1 = SSC2 2 = TSSP 3 = ALR1 4 = ALR2 5 = ALR3 6 = INPUT[1] 7 = Not INPUT[1]	00_h

[1] Only available if OSS2 Logic = 4 = INPUT

	07_h	OSS2 Source A1 – Sensor Physical Output 2 Source A2 (PIN2) when used in SIO mode	R/W	uint8	0 = SSC1 1 = SSC2 2 = TSSP 3 = ALR1 4 = ALR2 5 = ALR3	00_h
	08_h	OSS2 Source A2 – Sensor Physical Output 2 Source A2 (PIN2) when used in SIO mode	R/W	uint8	0 = SSC1 1 = SSC2 2 = TSSP 3 = ALR1 4 = ALR2 5 = ALR3	00_h
TMU – SENSOR TIMER UNIT						
43_h	01_h	Timer Mode	R/W	uint8	0 = No Timer 1 = Stretch ON 2 = Delay ON 3 = Delay and Stretch ON 4 = One Shot	00_h
	02_h	Timer Value	R/W	uint16	0…65535 ms	0000_h
	03_h	Timer Source	R/W	uint8	0 = SSC1 1 = SSC2 2 = ALR1 3 = ALR2 4 = ALR3	00_h
CTU – SENSOR COUNTER UNIT						
44_h	01_h	Counter Mode	R/W	uint8	0 = Falling Edge 1 = Rising Edge 2 = Both	00_h
	02_h	Counter Value[1]	R/W	uint16	0…65535	0000_h
	03_h	Counter Source	R/W	uint8	0 = SSC1 1 = SSC2 2 = TSSP 3 = ALR1 4 = ALR2 5 = ALR3	00_h
	04_h	Counter Reset Source	R/W	uint8	0 = ALR1 1 = ALR2 2 = ALR3	01_h
SMU – SENSOR MONITOR UNIT						
46_h	01_h	Current Temperature[1]	R	uint16	–	0000_h
	02_h	Max. Lifetime Temperature	R	uint16	–	0000_h
	03_h	Min. Lifetime Temperature	R	uint16	–	0000_h
	04_h	Lifetime Temperature Cycle Count	R	uint8	–	00_h
	05_h	Lifetime Operating Hours	R	uint32	–	00000000_h
	06_h	Lifetime Power-On Cycles	R	uint32	–	00000000_h
	07_h	Lifetime EMC Disturbances	R	uint32	–	00000000_h
	08_h	EVENT FLAG[1][2]	R	uint8	0 = B0 (Coil failure) 1 = B1 (Short circuit on output) 2 = B2 (EMC disturbances) 3 = B3 (Collision on output) 4 = B4 (Over temperature) 5 = B5 (Under voltage)	00_h
SMAU – SENSOR MEASUREMENT ALARM UNIT						
47_h	01_h	Sensor Alarm 1 Threshold	R/W	uint16	0…110% S_d	10% S_d
	02_h	Sensor Alarm 1 Hysteresis	R/W	uint16	–	5%
	03_h	Sensor Alarm 1 Configuration	R/W	uint8	0 = Always OFF 1 = Active 2 = Active / IO-Link Event Generation	01_h

[1] This parameter is stored in a volatile memory

[2] A read on this subindex clear all flags

	04_h	Sensor Alarm 1 Source	R/W	uint8	0 = Distance (VTARGET) 1 = Counter 2 = Temperature 3 = MHM Median 4 = MHM Deviation 50% 5 = MHM Deviation To Target Value	00_h
	05_h	Sensor Alarm 2 Threshold	R/W	uint16	0 … 65535	0000_h
	06_h	Sensor Alarm 2 Hysteresis	R/W	uint16	–	0000_h
	07_h	Sensor Alarm 2 Configuration	R/W	uint8	0 = Always OFF 1 = Active 2 = Active / IO-Link Event Generation	01_h
	08_h	Sensor Alarm 2 Source	R/W	uint8	0 = Distance (VTARGET) 1 = Counter 2 = Temperature 3 = MHM Median 4 = MHM Deviation 50% 5 = MHM Deviation To Target Value	01_h
	09_h	Sensor Alarm 3 Threshold	R/W	uint16	–25 … 70°C	70°C
	10_h	Sensor Alarm 3 Hysteresis	R/W	uint16	–	0000_h
	11_h	Sensor Alarm 3 Configuration	R/W	uint8	0 = Always OFF 1 = Active 2 = Active / IO-Link Event Generation	01_h
	12_h	Sensor Alarm 3 Source	R/W	uint8	0 = Distance (VTARGET) 1 = Counter 2 = Temperature 3 = MHM Median 4 = MHM Deviation 50% 5 = MHM Deviation To Target Value	02_h
FUNCTION AND LOCATION TAG						
48_h	01_h	Function Tag	R/W	char []	<user string, 32 bytes (variable length)>	"***"
	02_h	Location Tag	R/W	char []	<user string, 32 bytes (variable length)>	"***"
DEVICE CHARACTERISTIC						
49_h	01_h	Profile Compatibility	R	char []	"SSP x.x.x"	–
	02_h	Detection Range Max.	R	char []	Depends on sensor type	–
	03_h	Supply Voltage Range (U_b)	R	char []	Depends on sensor type	–
	04_h	Max. Output Current	R	char []	Depends on sensor type	–
	05_h	Ambient Temperature Range (T_A)	R	char []	Depends on sensor type	–
	06_h	Storage Temperature Range (T_S)	R	char []	Depends on sensor type	–
	07_h	Enclosure Rating	R	char []	Depends on sensor type	–
MHM – MEASUREMENT HISTOGRAM MODULE						
$4A_h$	01_h	MHM Source	R/W	uint8	0 = Distance 1 = Temperature	00_h
	02_h	MHM Trigger	R/W	uint8	0 = OFF 2(2) = When Input = 1 1= ON 3 = When TSSP = 1	00_h
	03_h	Range Start	R/W	uint16	0 … 110% S_d	0% Sd
	04_h	Range End	R/W	uint16	0 … 110% S_d	100% Sd
	05_h	BIN 1[1]	R	uint32	First bin of value defined by ("Range End" – "Range Start")/16	$4 \times 00_h$
	06_h	BIN 2[1]	R	uint32	…	$4 \times 00_h$
	07_h	BIN 3[1]	R	uint32	…	$4 \times 00_h$
	08_h	BIN 4[1]	R	uint32	…	$4 \times 00_h$
	09_h	BIN 5[1]	R	uint32	…	$4 \times 00_h$
	10_h	BIN 6[1]	R	uint32	…	$4 \times 00_h$
	11_h	BIN 7[1]	R	uint32	…	$4 \times 00_h$
	12_h	BIN 8[1]	R	uint32	…	$4 \times 00_h$
	13_h	BIN 9[1]	R	uint32	…	$4 \times 00_h$
	14_h	BIN 10[1]	R	uint32	…	$4 \times 00_h$
	15_h	BIN 11[1]	R	uint32	…	$4 \times 00_h$

[1] This parameter is stored in a volatile memory

[2] Option 0 only available if OSS2 Logic = 4 = INPUT

	16_h	BIN 12[1]	R	uint32	…	$4 \times 00_h$
	17_h	BIN 13[1]	R	uint32	…	$4 \times 00_h$
	18_h	BIN 14[1]	R	uint32	…	$4 \times 00_h$
	19_h	BIN 15[1]	R	uint32	…	$4 \times 00_h$
	20_h	BIN 16[1]	R	uint32	Last bin of value defined by (“Range End” – “Range Start”)/16	$4 \times 00_h$
	21_h	Median[1]	R	uint16	–	$2 \times 00_h$
	22_h	Deviation 50%[1]	R	uint16	–	$2 \times 00_h$
	23_h	Target Value	R/W	uint16	–	$2 \times 00_h$
	24_h	Deviation[1]	R	uint16	Deviation = Median – Target Value	$2 \times 00_h$
FUNCTION CLASS – MDC DESCRIPTION PARAMETER (8005_h)						
4080_h	01_h	Lower Limit	R	int32	Lower value measurement range, see range definition in table A.5. According to SSP[2], table C.8 page 39.	0
	02_h	Upper Limit	R	int32	Upper value measurement range, see range definition in table A.5. According to SSP[2], table C.8 page 39.	0
	03_h	Unit Code	R	uint16	See Unit table defined in table A.7. According to SSP[2], table C.8 page 39.	0
	04_h	Scale	R	int8	See Table B.2. According to SSP[2], table C.8 page 39.	0

[1] This parameter is stored in a volatile memory

[2] https://io-link.com/share/Downloads/Smart-Sensor-Profile/IOL-Smart-Sensor-Profile-2ndEd_V10_Mar2017.pdf

PROCESS DATA REPRESENTATION

PROCESS DATA STRUCTURE – DISTANCE, COUNTER, TEMPERATURE SENSING MODE

PROCESS DATA INPUT

Bitoffset

Byte	7	6	5	4	3	2	1	0
3	ALR3	ALR2	ALR1	SSC2	SSC1	TSSP	OSS2	OSS1
2	Scale Value							
1	Measurement value (LSB)[1]							
0	Measurement value (MSB)[1]							

(1) Measurement value raw data: 0..16384
Scalled value in IODD:
Distance (VTARGET) : 0..110%
Counter value: 0..16384 (no scalling)
Temperature (8 bit): -75°C..180°C (1 LSB = 1°C, offset =-75)

Name	Value	Description
ALR3	0	Alarm 3 is OFF
	1	Alarm 3 is ON
ALR2	0	Alarm 2 is OFF
	1	Alarm 2 is ON
ALR1	0	Alarm 1 is OFF
	1	Alarm 1 is ON
SSC2	0	Switching signal 2 is OFF
	1	Switching signal 2 is ON
SSC1	0	Switching signal 1 is OFF
	1	Switching signal 1 is ON
TSSP	0	Timered selected signal is OFF
	1	Timered selected signal is ON
OSS2	0	Output switching signal 2 is OFF
	1	Output switching signal 2 is ON
OSS1	0	Output switching signal 1 is OFF
	1	Output switching signal 1 is ON

PROCESS DATA OUTPUT

Bitoffset

Byte	7	6	5	4	3	2	1	0
0	RFU							DIS

Name	Value	Description
DIS	0	Sensor is enabled
	1	Sensor is disabled

ERROR TYPES

Code	Additional code	Name	Description
80_h	11_h	Index Not Available	Access occurs to a not existing index
80_h	12_h	Subindex Not Available	Access occurs to a not existing subindex
80_h	20_h	Service Temporarily Not Available	Parameter is not accessible due to the current state of the device application
80_h	21_h	Service Temporarily Not Available – Local Control	Parameter is not accessible due to an ongoing local operation at the device
80_h	22_h	Service Temporarily Not Available – Device Control	Parameter is not accessible due to a remote triggered state of the device application
80_h	23_h	Access Denied	Write access on a read-only parameter
80_h	30_h	Parameter Value Out Of Range	Written parameter value is outside its permitted value range
80_h	31_h	Parameter Value Above Limit	Written parameter value is above its specified value range
80_h	32_h	Parameter Value Below Limit	Written parameter value is below its specified value range
80_h	33_h	Parameter Length Overrun	Written parameter length is above its predefined length
80_h	34_h	Parameter Length Underrun	Written parameter length is below its predefined length
80_h	35_h	Function Not Available	Written command is not supported by the device application
80_h	36_h	Function temporarily Not Available	Written command is not available due to the current state of the device
80_h	40_h	Invalid Parameter Set	Written single parameter collides with other actual parameter settings
80_h	41_h	Inconsistent Parameter Set	Parameter inconsistencies were found at the end of the block parameter transfer, device plausibility check failed
81_h	01_h	MHM Trigger not available	First select OSS2 Logic = INPUT

EVENTS

Code	Type	Name	Description
1800_h	Warning	EMC Disturbances	EMC Disturbances detected by sensor
1801_h	Warning	Under IOL Voltage	Under IOL Voltage detected by sensor
1802_h	Error	Emitter Failure	Emitter Failure detected by sensor
1803_h	Warning	Short Circuit	Short Circuit detected by sensor
1804_h	Error	Under Voltage	Under Voltage detected by sensor
1805_h	Warning	Disturbances on Receiver	Disturbances on Receiver detected by sensor
1806_h	Warning	LED Regulation Limit	LED Regulation Limit detected by sensor
1807_h	Error	Ferrite, Coil, PCB Failure	Ferrite, Coil, PCB Failure detected by sensor
1808_h	Notification	Alarm 1	Alarm 1 Threshold reached
1809_h	Notification	Alarm 2	Alarm 2 Threshold reached
$180A_h$	Notification	Alarm 3	Alarm 3 Threshold reached
$180B_h$	Notification	Trigger Teach	New SSC value is taught
5010_h	Error	Component malfunction	Repair or exchange
7710_h	Error	Short circuit	Check installation