Honeywell | Industrial & Commercial Thermal

krom schroder

Burner control units BCU 480

Technical Information · GB
6 Edition 03.16l

- For pilot and main burners in intermittent or continuous operation
- Replace the local control cabinet
- Flame control by UV, ionization or a further option of using the furnace chamber temperature
- Display of the program status, unit parameters and flame signal; Manual mode for burner adjustment and for diagnostic purposes

ПРОМЭЛЕКТРОНИКА / sales@prom-elec.com

Contents

Burner control units BCU 480 1

Contents 2

1 Application 5

1.1 Examples of application 7

1.1.1 Stage-controlled main burner with alternating pilot burner 7

1.1.2 Stage-controlled main burner with permanent pilot burner 8

1.1.3 Two-stage-controlled main burner with permanent pilot burner. 9

1.1.4 Modulating-controlled burner 10

1.1.5 BCU 480..B1 for PROFIBUS DP 11

1.1.6 BCU 480..D: High temperature equipment 11

2 Certification 12

3 Function 13

3.1 Connection diagrams 13

3.1.1 BCU 480..E1. 13

3.1.2 BCU 480. 14

3.1.3 BCU 480..B1..E1 15

3.1.4 BCU 480..B1. 16

3.1.5 BCU 460..P..E1 with industrial plug connector 17

3.1.6 BCU 460..P with industrial plug connector 18

3.2 BCU..P with 16-pin industrial plug connector 19

3.3 PROFIBUS DP 20

3.3.1 Safety-related control signals. 20

3.3.2 BCSoft. 21

3.3.3 Configuration, Master-Slave procedure 21

3.3.4 Addressing. 21

3.3.5 Network technology. 22

3.3.6 Configuration. 22

3.3.7 Bus communication 22

3.4 BCU 480 program sequence 24

3.5 Program status and fault messages. 27

4 Parameters 29

4.1 Scanning the parameters. 30

4.2 Flame control 31

4.2.1 Flame signal, pilot burner 31

4.2.2 Flame signal, main burner. 31

4.2.3 Program status when the most recent fault occurred 31

4.2.4 Switch-off threshold of the flame amplifier. 31

4.2.5 High temperature operation in the case of BCU.. D2 or BCU..D3 32

4.2.6 UVS check 35

4.3 Pilot and main burner monitoring 36

4.3.1 Permanent pilot burner. 37

4.3.2 Interrupted pilot burner 37

4.4 Behaviour in start-up position/standby 38

4.4.1 Flame simulation check in start-up position/ standby 38

4.4.2 Minimum burner pause time t_{BP} 39

4.5 Behaviour during start-up 40

4.5.1 Safety time on start-up t_{SA} 40

4.5.2 Flame proving period t_{FS} 41

4.5.3 Minimum burner on time t_B 41

4.5.4 Burner start-up attempts 42

4.6 Behaviour during operation. 44

4.6.1 Safety time during operation t_{SB} for pilot and main burners 44

4.6.2 Fault lock-out or restart, pilot burner 44

4.6.3 Fault lock-out or restart, main burner. 46

4.6.4 Program status on last fault 47

4.7 Air valve control on BCU..L. 48

4.7.1 Purge. 48

4.7.2 Cooling in start-up position/standby 48

4.7.3 Burner start 48

4.7.4 Air valve opens in the case of external activation (not during start-up). 49

4.7.5 Air valve opens in the case of external activation (even during start-up) 50

4.7.6 Air valve opens with valve V2 51

▼ = To be continued

4.7.7 Air valve opens with operating signal 52
4.7.8 Low fire over-run time t_{KN} after a controlled shut-down 53
4.7.9 Behaviour of the air valve in the event of a fault lock-out 54
4.8 Manual mode 55
4.8.1 Manual mode limited to 5 minutes 55
5 Selection 56
5.1 Type code 56
6 Project planning information 57
6.1 Cable selection 57
6.1.1 Ionization cable 57
6.1.2 Ignition cable 57
6.1.3 UV cable 57
6.2 Ignition electrode 57
6.2.1 Electrode gap 57
6.2.2 Star electrodes 57
6.3 Calculating the safety time t_{SA} 58
6.4 Minimum burner on time 59
6.5 Safety interlocks (Limits) 59
6.6 Protection of safety-relevant outputs 59
6.7 Emergency off 60
6.7.1 In the event of fire or electric shock 60
6.7.2 Via the safety interlocks (limits) 60
6.8 Reset 60
6.8.1 Parallel reset 60
6.8.2 Permanent remote reset 60
6.8.3 Automatic remote reset (PLC) 60
6.9 Burner start 60
6.10 Restart and start-up attempts 60
6.11 Fault signalling 61
6.12 Protecting the pilot burner from overload 61
6.13 Installation 61
6.14 Wiring 62
6.15 BCU and BCU..E1 (with and without adapted power management) 62
6.16 Signal distributor board 62
6.17 PROFIBUS DP 63
6.17.1 Safety-related control signals 63
6.17.2 Wiring the PROFIBUS plug connector 63
6.17.3 EMC 63
6.17.4 Unit replacement 63
6.17.5 Status and fault messages for PROFIBUS DP 64
6.18 Third gas valve (can be shut down) on BCU..L . 66
6.19 BCU switched off 67
6.20 Furnace control 67
6.21 Mains switch 67
6.22 Note on EC type-examination 67
6.23 SIL/PL level for thermoprocessing equipment 67
6.24 Changing parameters 68
7 Flame control 69
7.1 With ionization sensor 69
7.2 With UV sensor 69
7.3 Via the temperature in high temperature equipment 70
8 Accessories 71
8.1 High-voltage cable 71
8.2 Industrial plug connector, 16-pin 71
8.3 PROFIBUS plug connector 71
8.4 BCSoft 72
8.4.1 Opto-adapter PCO 200 72
8.4.2 Bluetooth adapter PCO 300 72
8.5 “Changed parameters” stickers 72
8.6 External securing bar 73
8.7 Fastening set 73
8.8 Radio interference suppressed electrode plugs . . 73
9 Technical data 74
9.1 BCU..B1 75
9.2 PROFIBUS DP 75
9.3 Safety-specific characteristic values 76

▼ = To be continued

9.4 Housing dimensions 77
9.5 Operating controls 77
9.6 Installation 77
10 Legend 78
11 Glossary 79
11.1 Waiting time t_W 79
11.2 Safety time on start-up t_{SA} 79
11.3 Ignition time t_Z 79
11.4 Flame simulation/Flame simulation delay time t_{LV} 79
11.5 Safety time during operation t_{SB} 80
11.6 Flame signal 80
11.7 Fault lock-out 80
11.8 Safety interlocks (Limits) 80
11.9 Pilot gas valve V1 80
11.10 Main gas valve V2 81
11.11 Continuous operation 81
11.12 Air valve 81
11.13 Diagnostic coverage DC 81
11.14 Mode of operation 81
11.15 Safe failure fraction SFF 81
11.16 Probability of dangerous failure PFH_D 82
11.17 Mean time to dangerous failure $MTTF_d$ 82
Feedback 83
Contact 83

▼ = To be continued

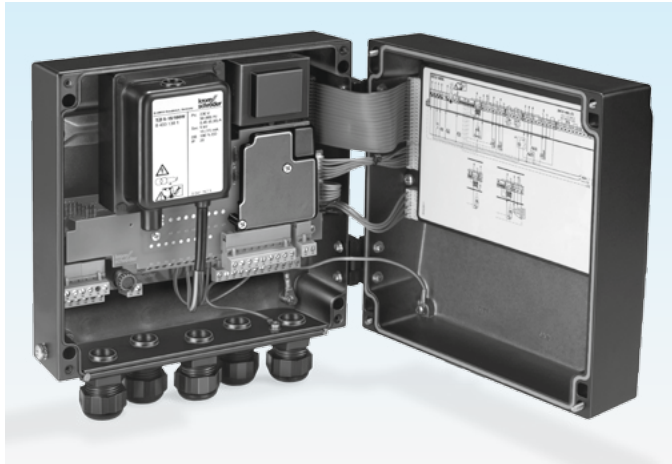

The BCU unites the functionally interrelated components of automatic burner control unit, ignition transformer, Manual/Automatic mode and display of operating and fault statuses in a compact metal housing.

1 Application

The burner control units BCU 480 control, ignite and monitor gas burners for intermittent or continuous operation. As a result of their fully electronic design, they react quickly to various process requirements and are therefore suitable for frequent cycling operation.

They can be used for industrial burners of unlimited capacity which are ignited by pilot burners. Pilot and main burners may be modulating or stage-controlled. The BCU 480 monitors pilot and main burners independently. The pilot burner can burn permanently or be switched off. The BCU is installed near the burner to be monitored.

On industrial furnaces, the BCU reduces the load on the central furnace control by taking over tasks that only relate to the burner, for example it ensures that the burner always ignites in a safe condition when it is restarted.

The air valve control assists the furnace control for cooling, purging and capacity control tasks.

The program status, the unit parameters and the level of the flame signal can be read directly from the unit. The burner can be controlled manually for commissioning and diagnostic purposes.

If the local requirements on the burner control unit change, the PC software “BCSoft” can be adjusted to the unit parameters of the application by using the optical interface.

Bogie hearth forging furnace in the metallurgical industry

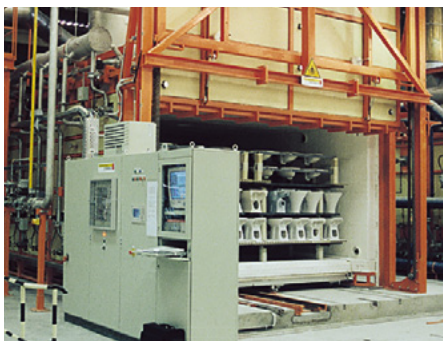

Intermittent shuttle kiln in the ceramics industry

Walking beam furnace with overhead firing

The service personnel is supported by a convenient visualization system of the input and output signals and the error history.

The new power management scheme reduces installation and wiring costs. The power for the valves and ignition transformer is supplied via the power supply of the BCU, protected by a replaceable fine-wire fuse.

The conventional wide-spread systems used in industrial furnace and kiln construction require bridging of large distances for signal processing. The optionally available BCU..B1 for connection to the PROFIBUS DP fieldbus is equipped for this purpose.

As a standardized fieldbus system, the PROFIBUS DP considerably reduces development, installation and commissioning costs compared to conventional wiring.

The use of a standard bus system offers massive benefits compared to manufacturer-specific bespoke solutions. Time-tested hardware components, standardized connection methods and a series of tools of bus diagnostics and optimization are available on the market from a whole range of manufacturers. The widespread use of the system ensures that the planning and service personnel are very familiar with how the system operates and how to handle it and can therefore operate the system efficiently.

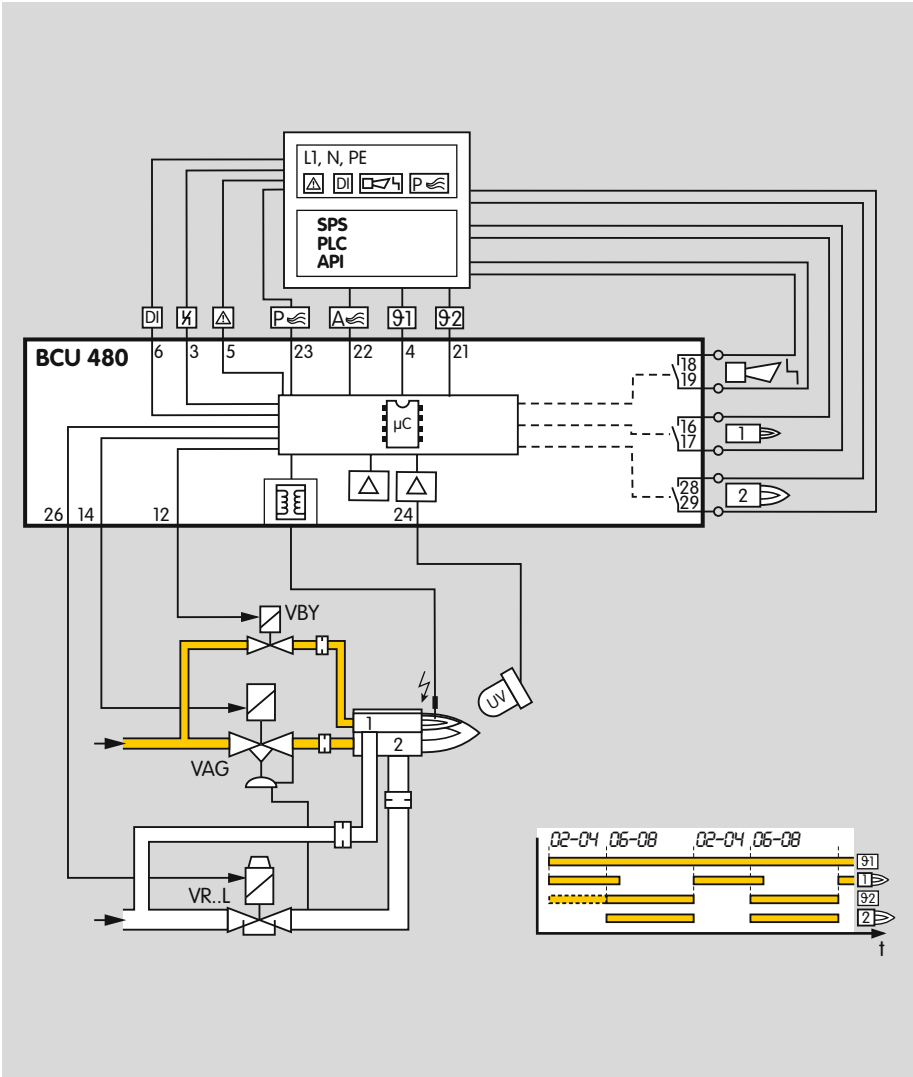

1.1 Examples of application

1.1.1 Stage-controlled main burner with alternating pilot burner

Control:
Main burner ON/OFF.

The main burner can be started with reduced capacity after the operating signal from the pilot burner has been detected. The pilot burner is switched off automatically after the main burner has started up. When the main burner is switched off, the pilot burner automatically switches on again. This reduces the main burner start-up time.

A UV sensor monitors the flame signal from pilot and main burners. UV sensor UVD 1 is used for continuous operation, UV sensor UVS for intermittent operation.

The BCU provides the cooling and purging processes.

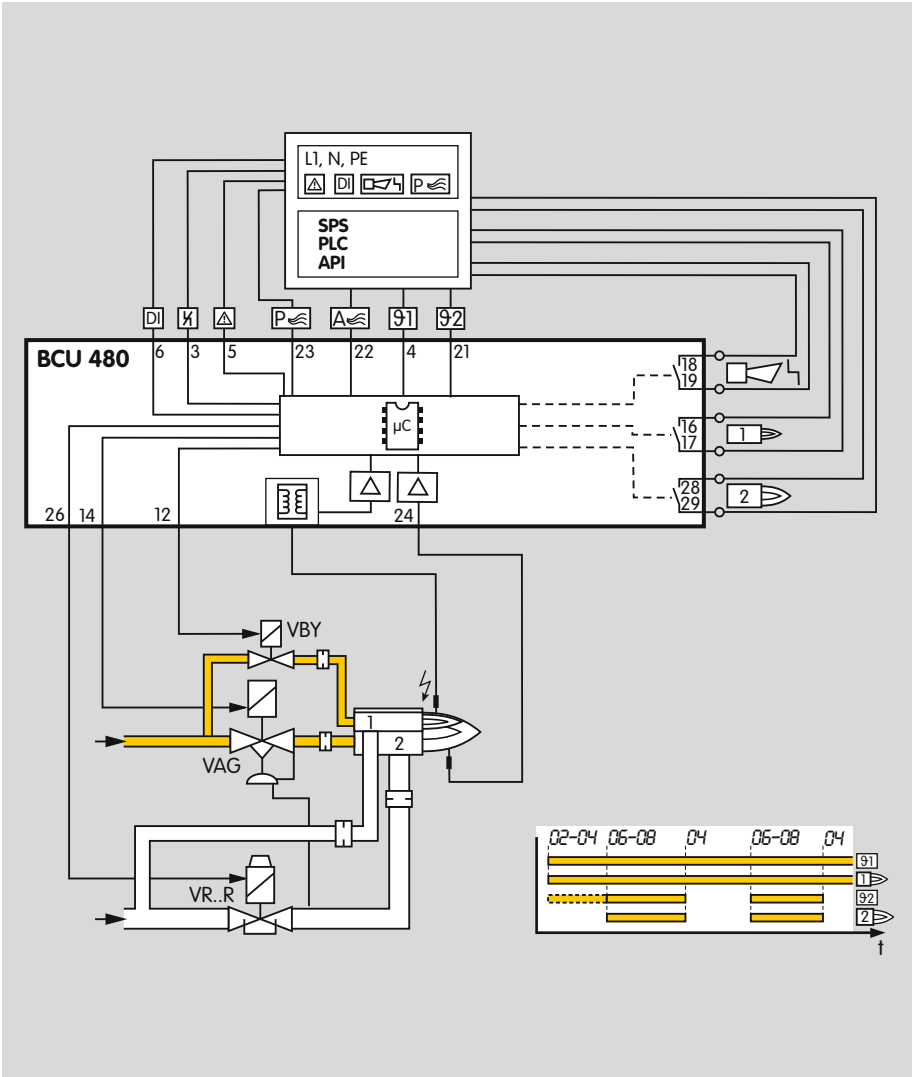

1.1.2 Stage-controlled main burner with permanent pilot burner

Control:
Main burner ON/OFF.

The main burner can be started with reduced capacity after the operating signal from the pilot burner has been detected. Pilot and main burners can be operated simultaneously. This reduces the time required by the main burner for starting up.

The BCU provides the cooling and purging processes.

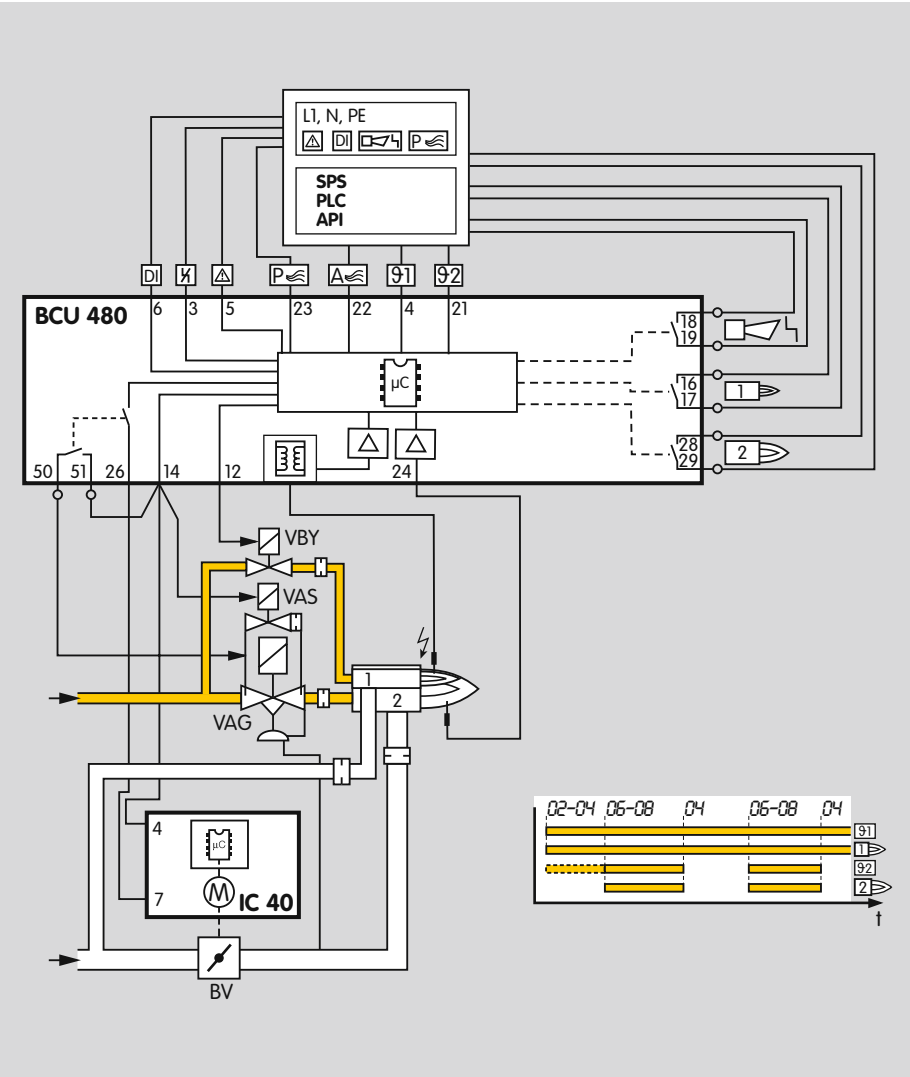

1.1.3 Two-stage-controlled main burner with permanent pilot burner

Control:
Main burner ON/OFF with ignition via bypass.

The main burner can be started at low-fire rate after the operating signal from the pilot burner has been detected. When the operating state is reached, the BCU issues the Enable signal for the maximum burner capacity. Pilot and main burners can be operated simultaneously. This reduces the time required by the main burner for starting up.

The BCU provides the cooling and purging processes.

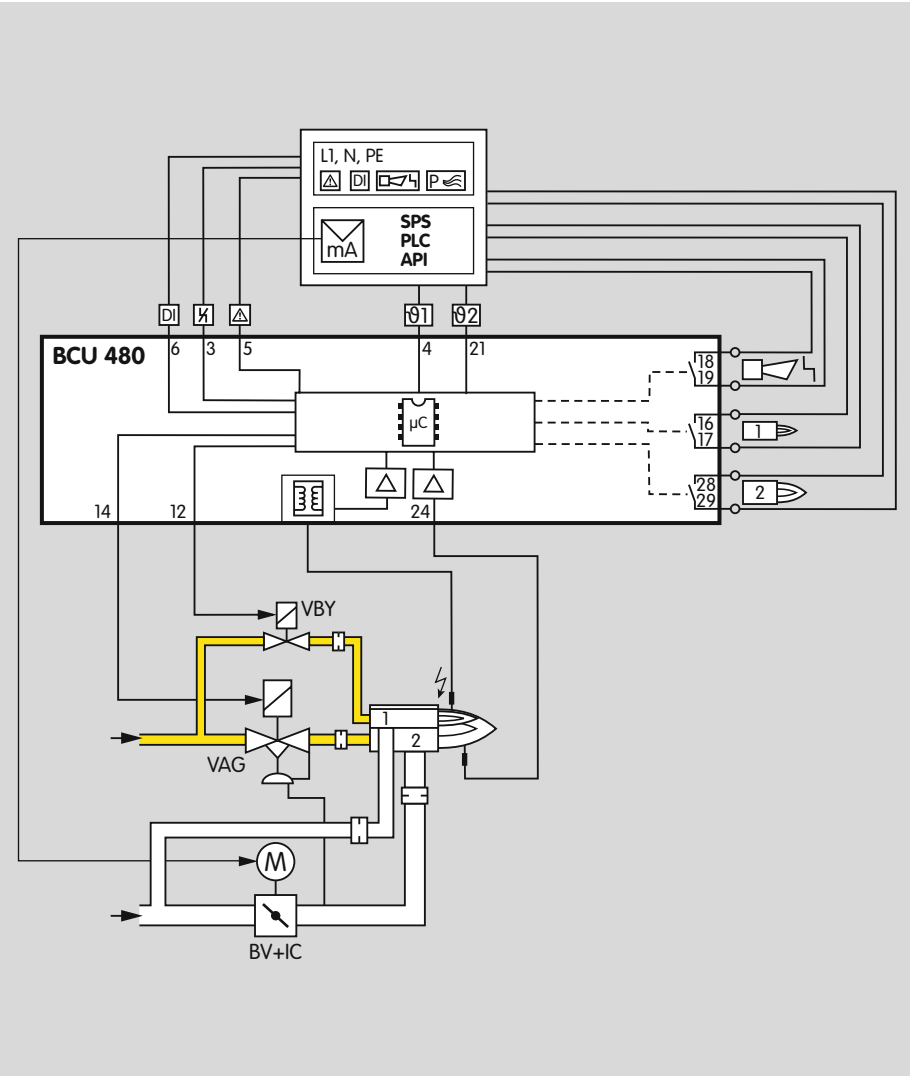

1.1.4 Modulating-controlled burner

Control:
Main burner continuous.

The butterfly valve for air is moved to ignition position in order to start the main burner. The main burner can be started at low-fire rate after the operating signal from the pilot burner has been detected. The control system controls the burner capacity via the butterfly valve for air after the operating state has been signalled. Pilot and main burners can be operated simultaneously. This reduces the time required by the main burner for starting up.

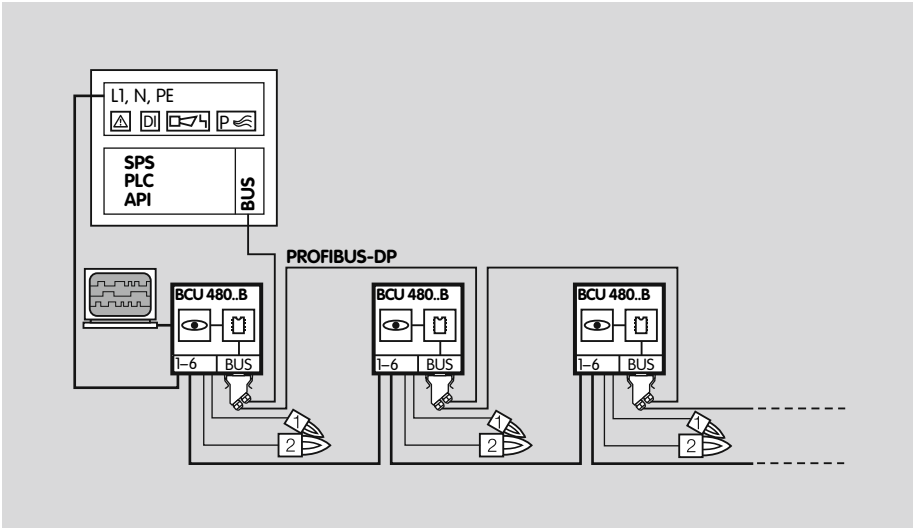

1.1.5 BCU 480..B1 for PROFIBUS DP

The bus system transfers the control signals for starting, resetting and for controlling the air valve from the control system to the BCU 480..B1. In the opposite direction, it sends operating status, the level of the flame signals and the current program status.

Control signals that are relevant for safety, such as the safety interlocks, purge (optional) and digital input, are transferred independently of the bus communication by separate cables.

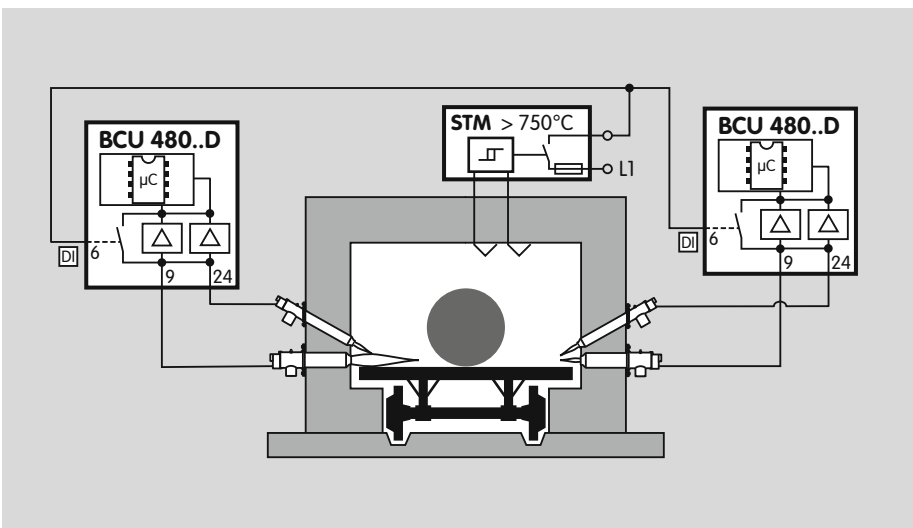

1.1.6 BCU 480..D: High temperature equipment

Indirect flame control using the temperature. During the start-up process, as long as the wall temperature is below auto ignition temperature, the flame must be controlled by conventional methods. When the working temperature has exceeded 750°C, the safety temperature monitor (STM) takes over the indirect flame control.

2 Certification

Certificates – see Docuthek.

Certified to SIL and PL

For systems up to SIL 3 pursuant to EN 61508 and PL e pursuant to ISO 13849

EU certified pursuant to

- Gas Appliances Directive (2009/142/EC) in conjunction with
  EN 298:2012

Meets the requirements of the

- Low Voltage Directive (2006/95/EC),
- EMC Directive (2004/108/EC).

ANSI/CSA approved

American National Standards Institute/Canadian Standards Association – ANSI Z21.20/CSA C22.2, No. 199/UL 372
www.csagroup.org – Class numbers: 3335-01 and 3335-81.

FM approved

Factory Mutual Research Class: 7610 “Combustion Safeguards and Flame Sensing Systems”.

Suitable for applications pursuant to NFPA 86.

www.approvalguide.com

AGA approved

Australian Gas Association, Approval No.: 6478

http://www.aga.asn.au/product_directory

Eurasian Customs Union

The product BCU 480 meets the technical specifications of the Eurasian Customs Union.

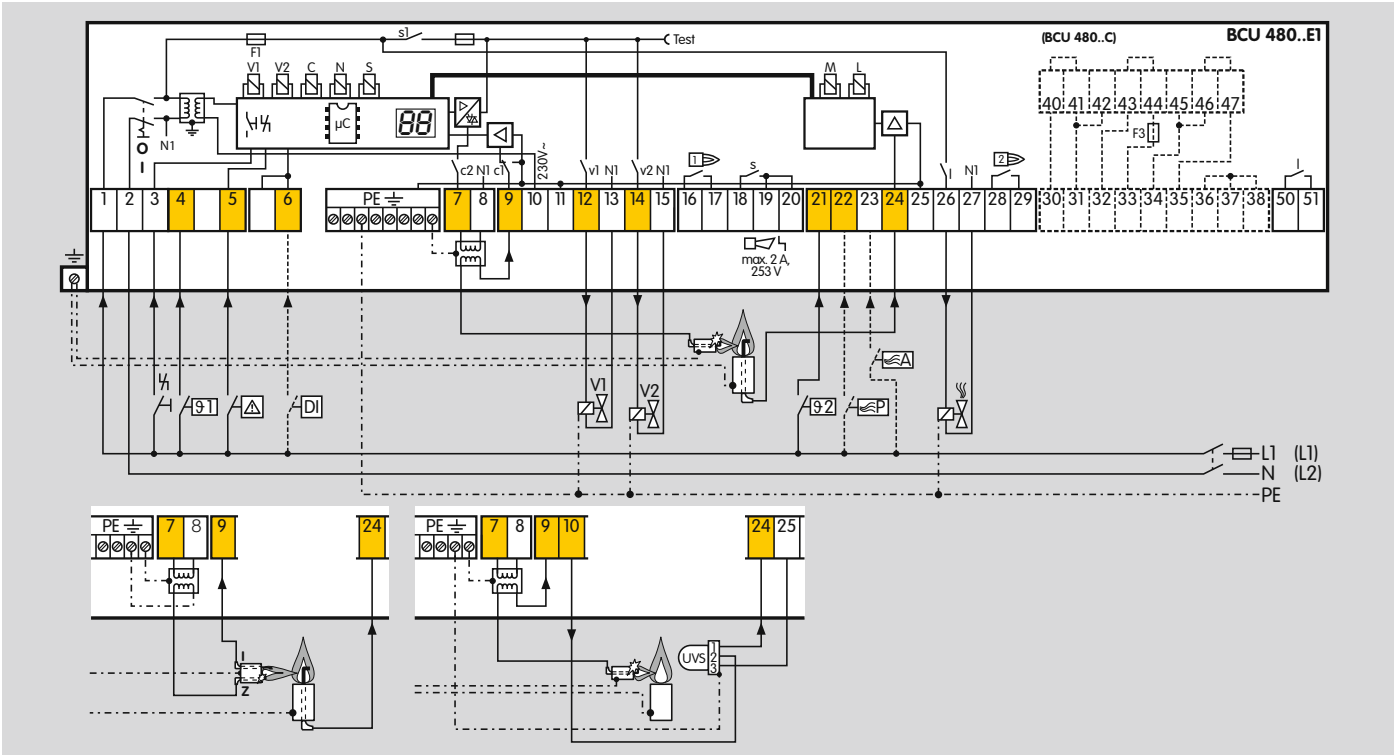

3 Function

3.1 Connection diagrams

3.1.1 BCU 480..E1

For cable selection and wiring, see page 57 (Project planning information).

For the explanation of symbols, see page 78 (Legend).

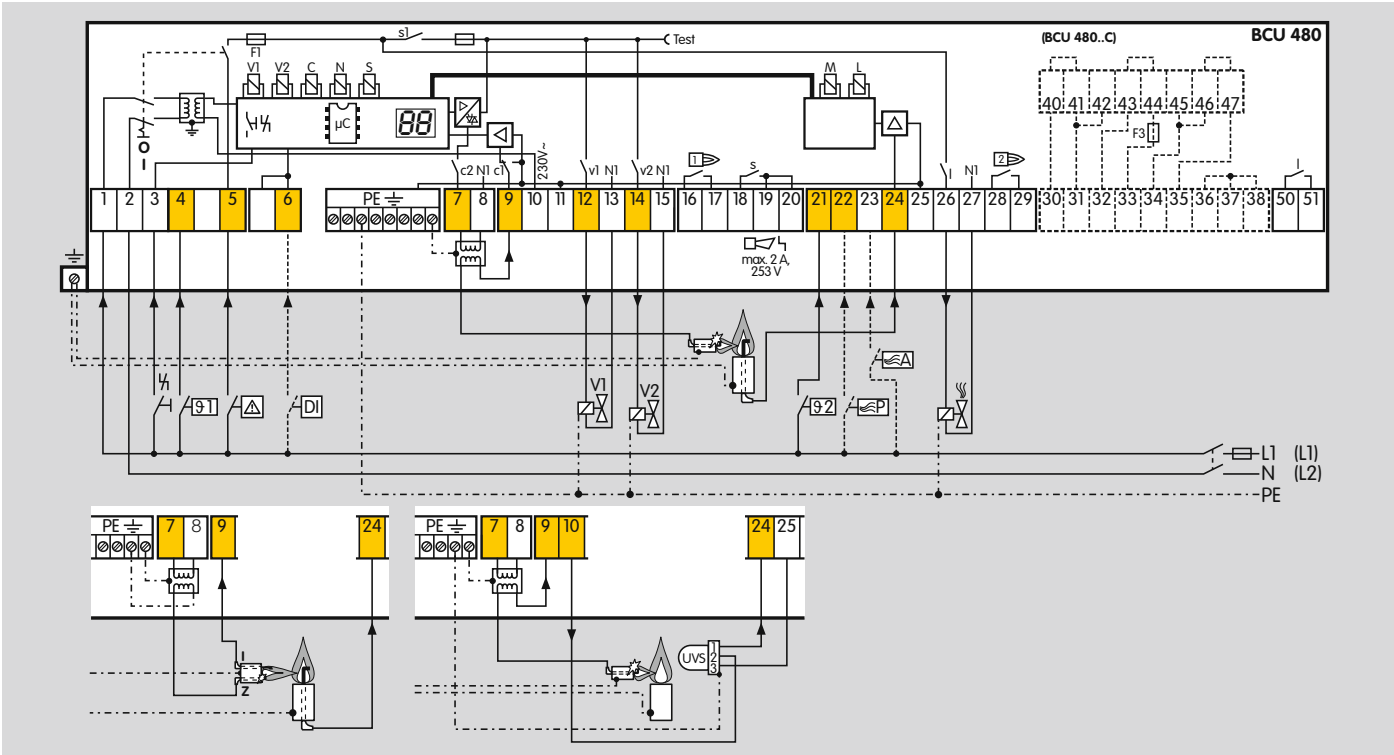

3.1.2 BCU 480

For cable selection and wiring, see page 57 (Project planning information).

For the explanation of symbols, see page 78 (Legend).

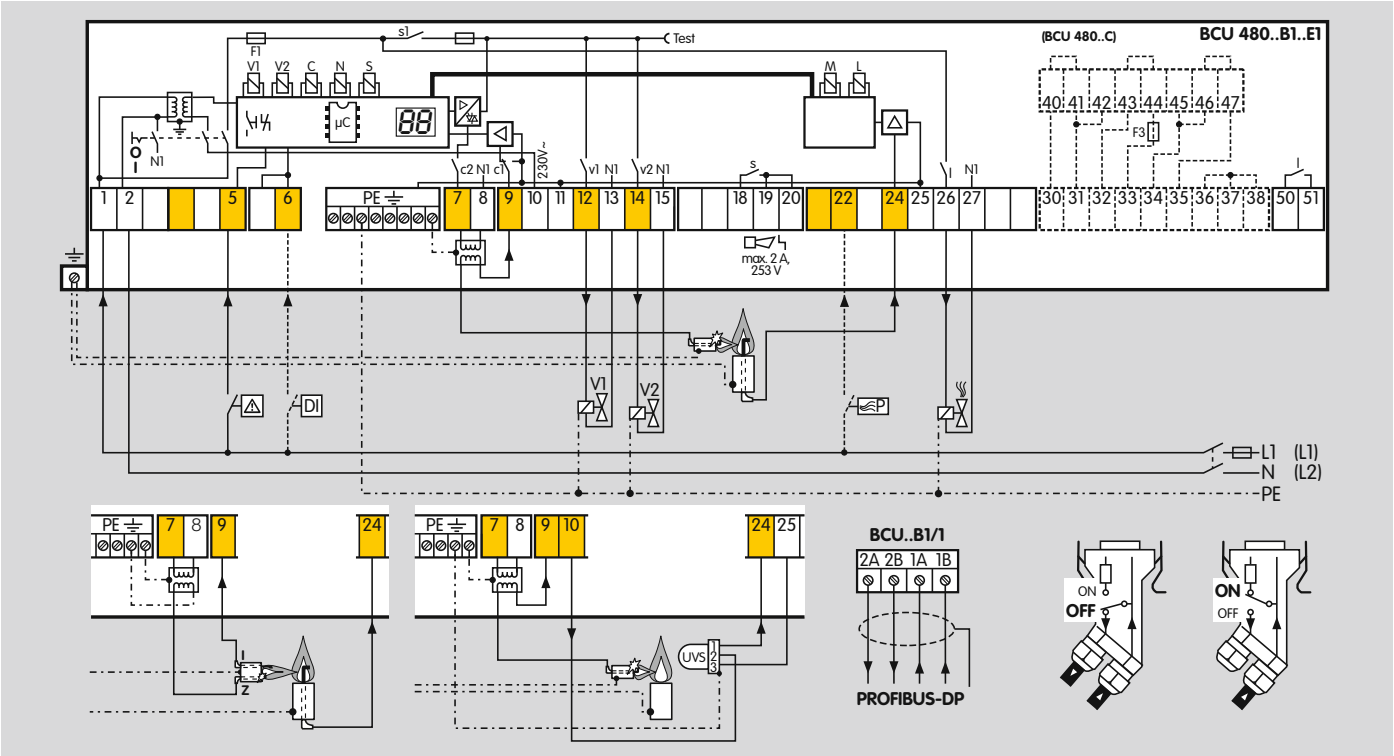

3.1.3 BCU 480..B1..E1

For cable selection and wiring, see page 57 (Project planning information).

For the explanation of symbols, see page 78 (Legend).

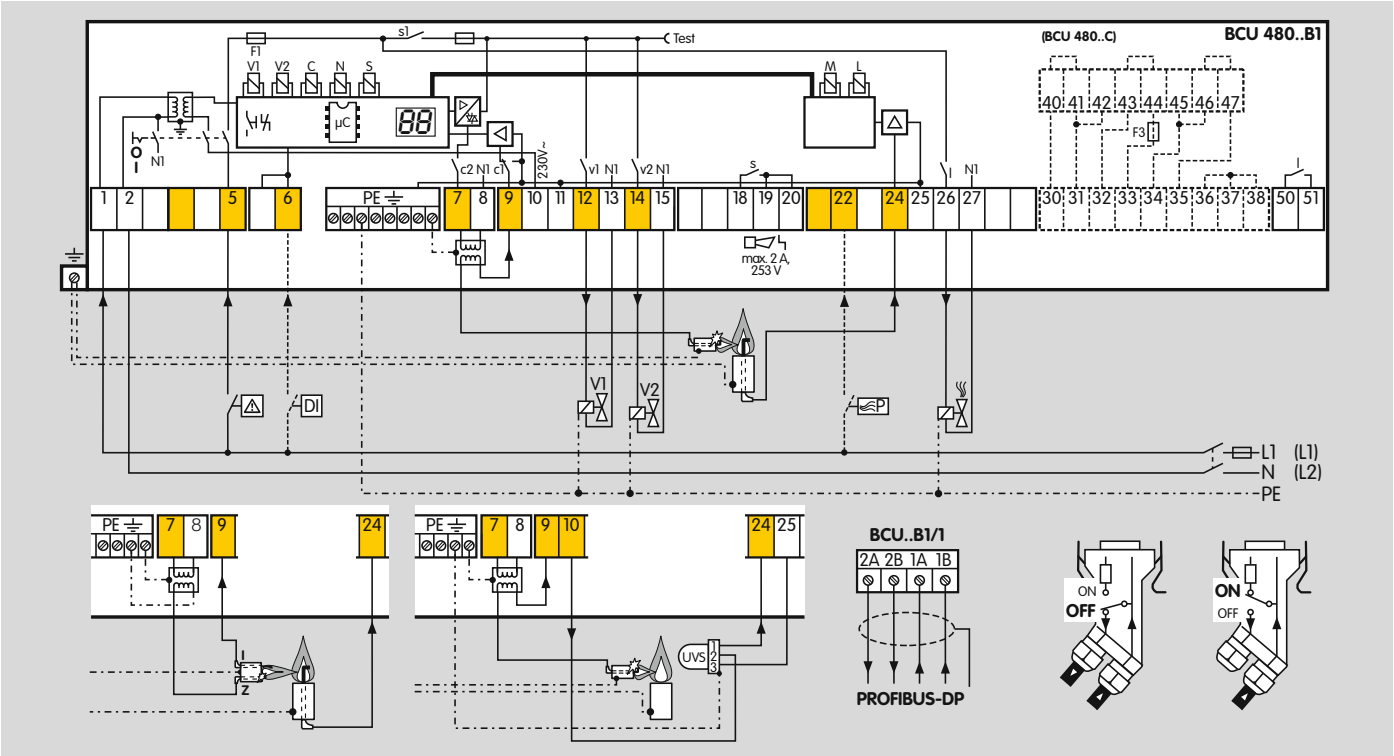

3.1.4 BCU 480..B1

For cable selection and wiring, see page 57 (Project planning information).

For the explanation of symbols, see page 78 (Legend).

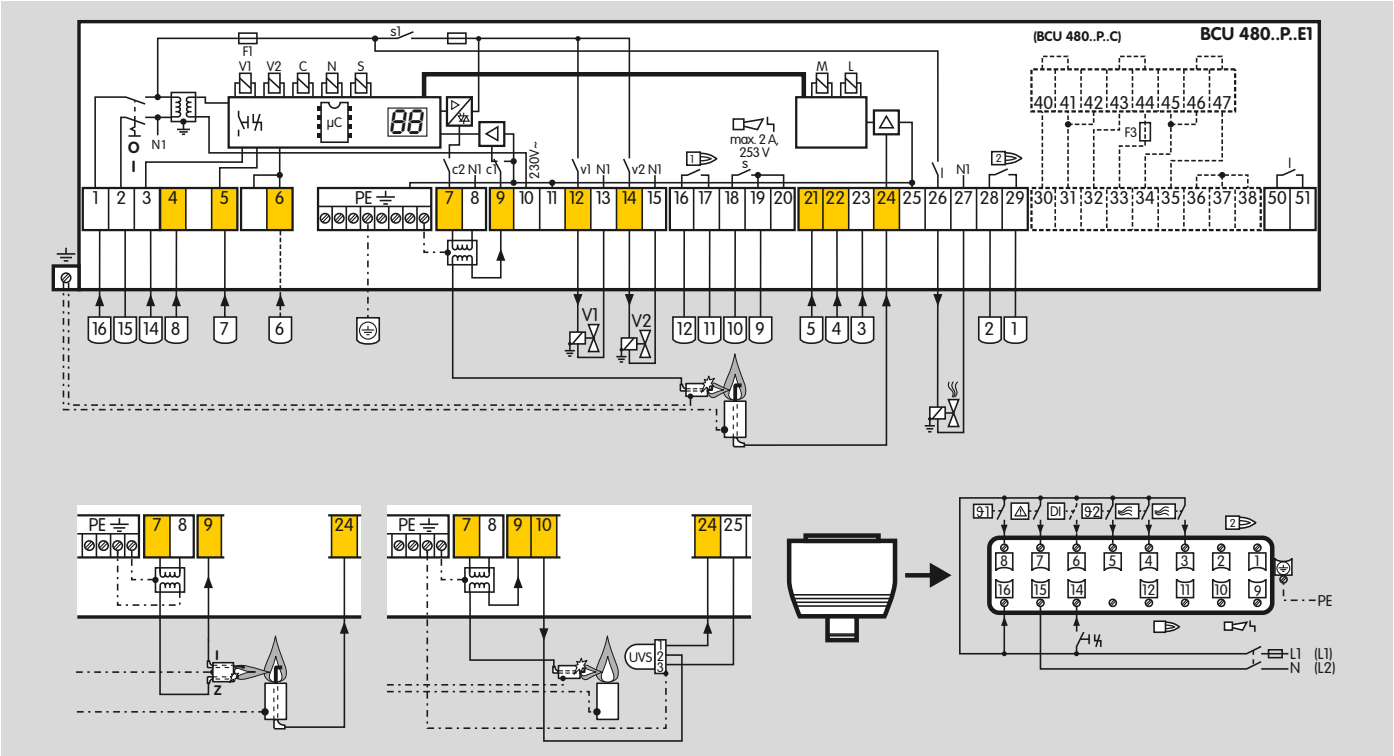

3.1.5 BCU 460..P..E1 with industrial plug connector

For cable selection and wiring, see page 57 (Project planning information).

For the explanation of symbols, see page 78 (Legend).

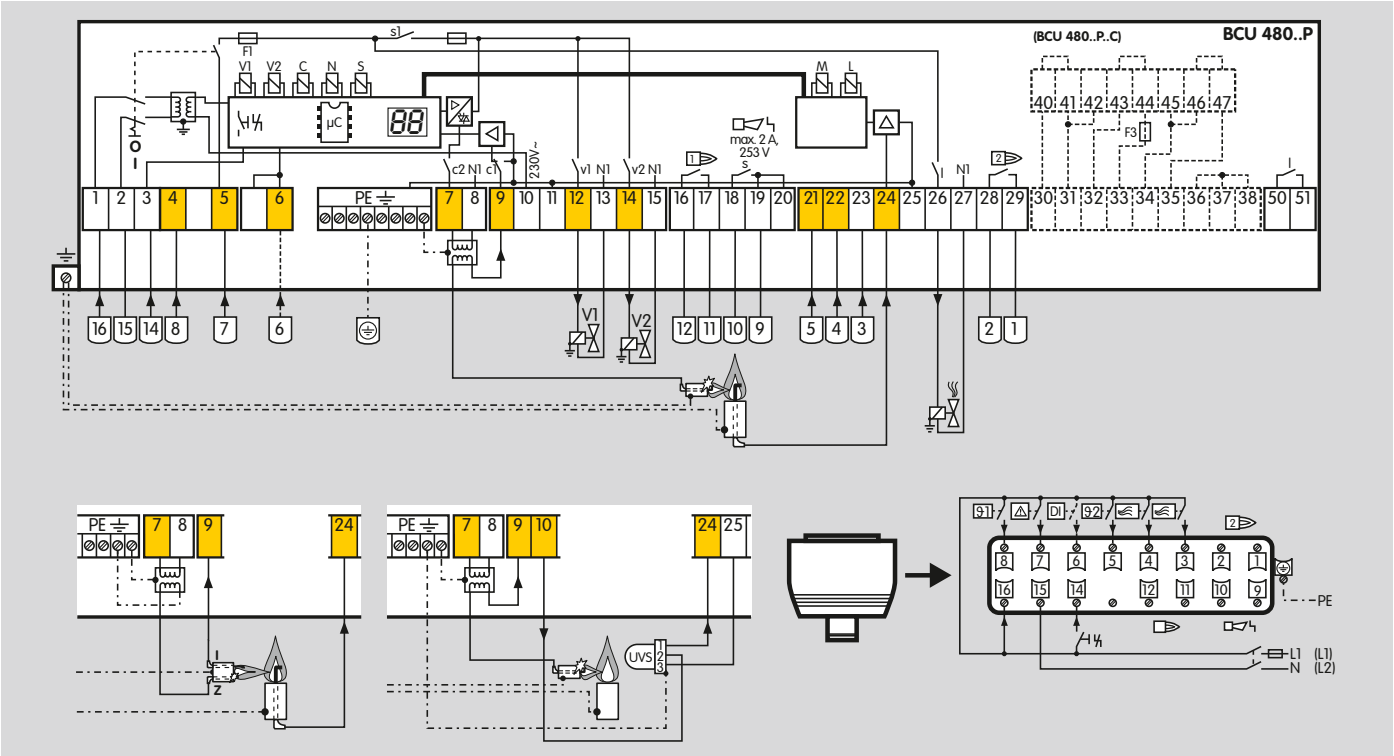

3.1.6 BCU 460..P with industrial plug connector

For cable selection and wiring, see page 57 (Project planning information).

For the explanation of symbols, see page 78 (Legend).

3.2 BCU..P with 16-pin industrial plug connector

The burner control unit BCU 480..P can be supplied with an industrial plug connector (pursuant to VDE 0627). This 16-pin plug connector ensures fast connecting or disconnecting of units without any additional wiring required. This simplifies replacing the unit and reduces standstill times.

All signals to the higher-level control system, the mains supply and the safety interlocks are routed via this plug, see page 71 (Accessories).

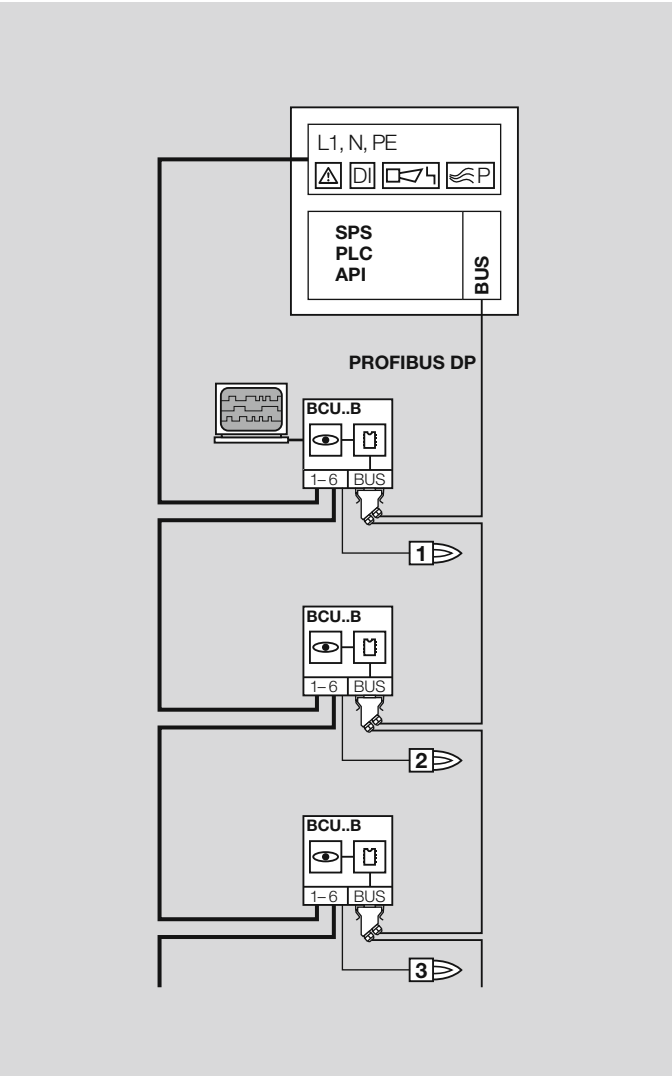

3.3 PROFIBUS DP

BCU..B1 features the same scope of functions and performance of a BCU® without a PROFIBUS connection.

PROFIBUS is a manufacturer-independent, open fieldbus standard for diverse applications.

PROFIBUS DP is a bus variant for communication between automation systems and distributed peripherals at the field level, optimized for speed and low connection costs.

On PROFIBUS DP, the individual bus stations are connected via a 2-core shielded cable as standard.

The bus system transfers the control signals for starting, resetting and for controlling the air valve to purge the furnace or kiln or for cooling in start-up position and heating during operation from the control system (PLC) to the BCU..B1. In the opposite direction, it sends operating status, the level of the flame signal and the current program status.

3.3.1 Safety-related control signals

Signals from the safety interlocks and digital input are transferred independently of the bus communication by separate cables. The air valve used to purge the furnace or kiln can either be activated via the PROFIBUS or via a separate cable to terminal 22. The purging process must be monitored by further measures, e.g. flow monitoring.

3.3.2 BCSoft

The Windows software BCSoft allows extended access to individual statistics, protocol functions, line recorders and the parameterization of the burner control unit via an optical interface. Unit parameters which are not relevant to safety can be set and adjusted to the specific application.

3.3.3 Configuration, Master-Slave procedure

PROFIBUS DP is structured as a Master-Slave system. This allows mono-master or multi-master systems to be implemented.

A distinction is made between three device types:

- DP Masters Class 1 (DPM1)
  DPM1 devices are central controllers which exchange data with the distributed stations (slaves) on the basis of a defined cycle. This includes, for instance, the PLC, PC, CNC or VME systems with which the PROFIBUS DP is operated.
- DP Masters Class 2 (DPM2)
  DPM2 devices are programming, project planning or operator-control devices. They are used for configuration and commissioning of the system or for system operation and visualization in ongoing operation.
- DP Slaves
  The devices which transmit input information from the periphery to the master and which issue output information from the master to the periphery are referred to as “slaves”.
  This also includes the BCU..B1.

3.3.4 Addressing

A maximum of 126 units (masters and slaves) can be connected to a PROFIBUS DP system. Each station is assigned an individual PROFIBUS address which can be set between 0 and 126 using two code switches on the BCU..B1 board.

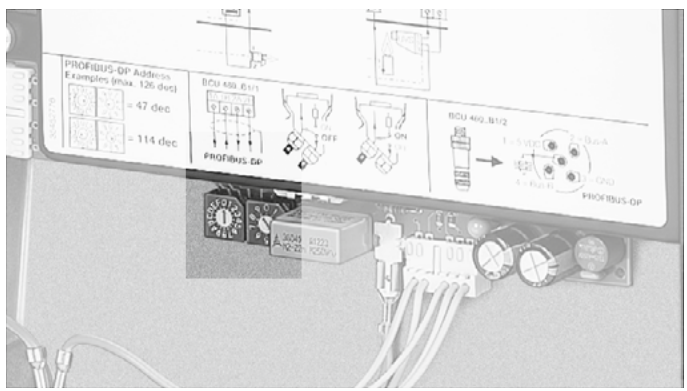

3.3.5 Network technology

All devices are connected in a bus structure (line). Up to 32 stations (masters or slaves) can be connected in a single segment. The beginning and end of each segment is fitted with an active bus terminator. Both bus terminators must have a permanent power supply to ensure error-free operation. The power supply for the bus terminator is provided by the BCU. The bus terminator can be connected in the bus connection plug.

If more than 32 stations are implemented or if there is a need to expand the network area, repeaters (amplifiers) must be used to link the individual bus segments.

3.3.6 Configuration

When planning a PROFIBUS DP system, unit-specific parameters of each station are to be taken into account.

To allow for simple and standardized planning, the parameters of the BCU..B1 have been summarized in a so-called device master data file (GSD). The file structure is standardized so that it can be read by the planning devices of different manufacturers.

The GSD file is supplied on the BCSoft CD which is included in the delivery of BCU..B1. The GSD file can also be ordered at www.docuthek.com. The steps required to copy the file are described in the instructions for the automation system.

3.3.7 Bus communication

Input bytes (BCU → master)

Bit	Byte 0	Byte 1	Byte 2	Byte 3	Byte 4
0	1	Reserved	See table on page 27 (Program status and fault messages)	0 – 25.5 µA 1 255 steps	0 – 25.5 µA 2 255 steps
1	2				
2					
3	A on				
4	P on				
5	DI on				
6					
7					
	BCU 480 basic I/O				
	BCU 480 standard I/O				

Output bytes (master → BCU)

Bit	Byte 0
0	
1	1
2	A
3	P
4	2
5	Reserved
6	Reserved
7	Reserved

I/O bytes: the programmer can choose the data to be transferred.

	Inputs	Outputs
480 basic I/O	1 byte	1 byte
480 standard I/O	5 bytes	1 byte

Baud rate: up to 1500 kbit/s.

The max. range per segment depends on the baud rate:

Baud rate [kbit/s]	Range [m]
93.75	1200
187.5	1000
500	400
1500	200

The specified ranges may be increased by using repeaters. No more than three repeaters should be connected in series.

The specified ranges relate to bus cable type A (two-core, shielded and twisted), e.g.
Siemens, Order No.: 6XV1830-0EH10, or
Lapp cable unitronic, Order No.: 2170-220T.

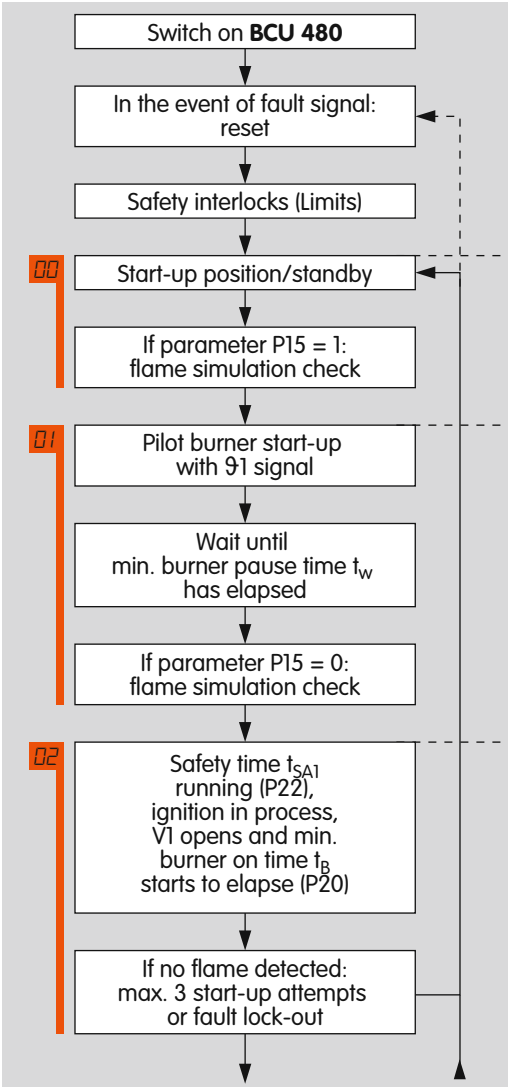

BCU 480

If the air valve control is used, the unit offers the following additional functions:

In start-up position, the air valve can be opened for cooling (display A0).

Using parameter 31, it can be determined whether the air valve can be activated externally during start-up (display A1).

The air valve can be set to open together with V1 (display A2) via parameter 30.

3.4 BCU 480 program sequence

Normal start-up

If an "old" fault is still being signalled after switching on, it will be necessary to reset this first.

The safety interlocks (terminal 5) must be closed and the burner control unit must be switched on.

The BCU 480 conducts a self-test when in the start-up position (the burner is switched off). If it does not determine a malfunction of the internal electronic circuitry or of the flame sensors, the burner can be started.

The pilot burner start-up is activated via the signal input "Start-up signal ϑ1" (terminal 4). Once the start-up signal ϑ1 has been applied, the BCU 480 opens valve V1 and ignites the burner. The ignition time t_Z is constant. If a flame is detected during the safety time t_{SA1}, the flame proving period t_{FS1} starts after the safety time t_{SA1} has elapsed.

If the pilot burner has been started successfully and its flame has stabilized, the burner control unit issues the Enable signal for main burner operation. The operation signalling contact for the pilot burner (terminals 16/17) closes.

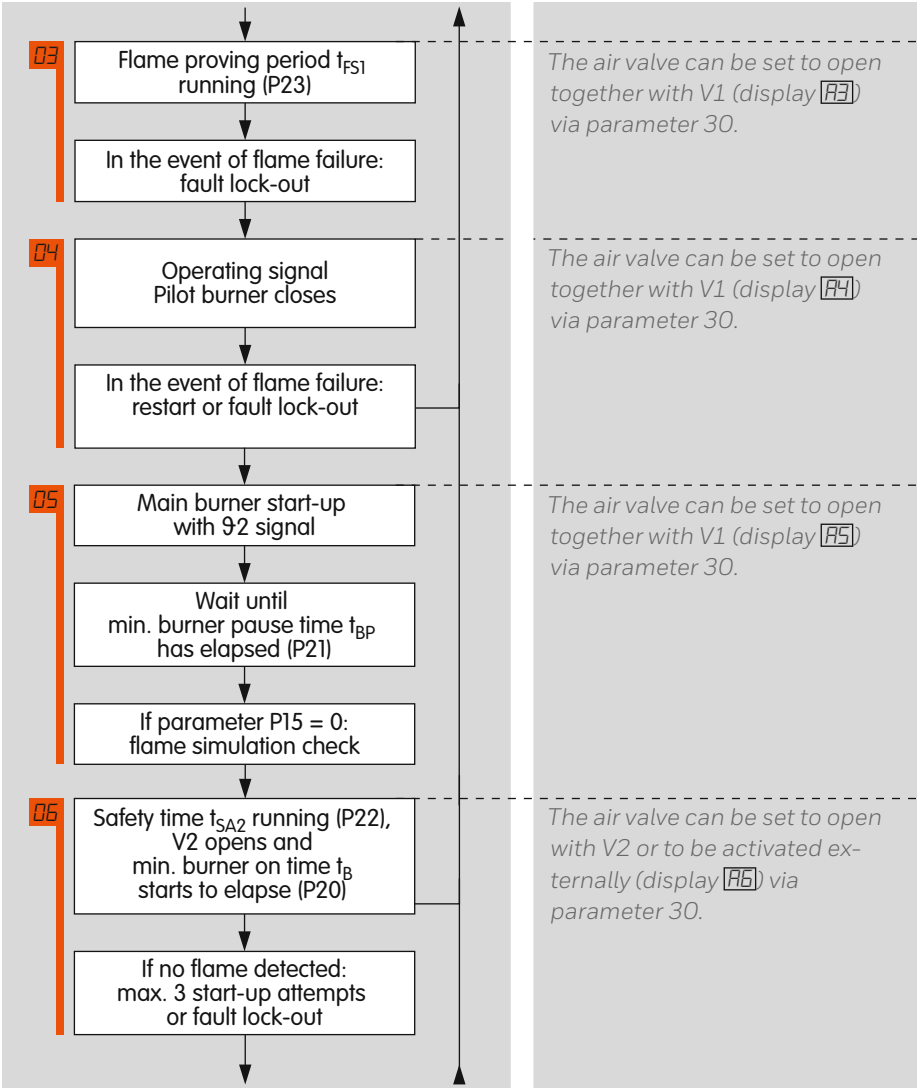

The BCU coordinates the correct program run for the pilot and main burners. The main burner can be started via the signal input "Start-up signal ϑ2" (terminal 21) if required.

Once the start-up signal ϑ2 has been applied (terminal 21), the BCU 480 opens valve V2. The main burner is ignited by the pilot burner.

If a flame is detected during the safety time t_{SA2}, the flame proving period t_{FS2} starts after the safety time t_{SA2} has elapsed.

If the main burner has been started successfully and its flame has stabilized, the operation signalling contact (terminals 28/29) closes.

Start-up of the pilot burner without flame signal

If no flame is detected during the safety time t_{SA1}, either a fault lock-out occurs or up to two further start-up attempts occur. The required functions and, if applicable, the number of start-up attempts must be specified when ordering (parameter 10, "Pilot burner start-up attempts").

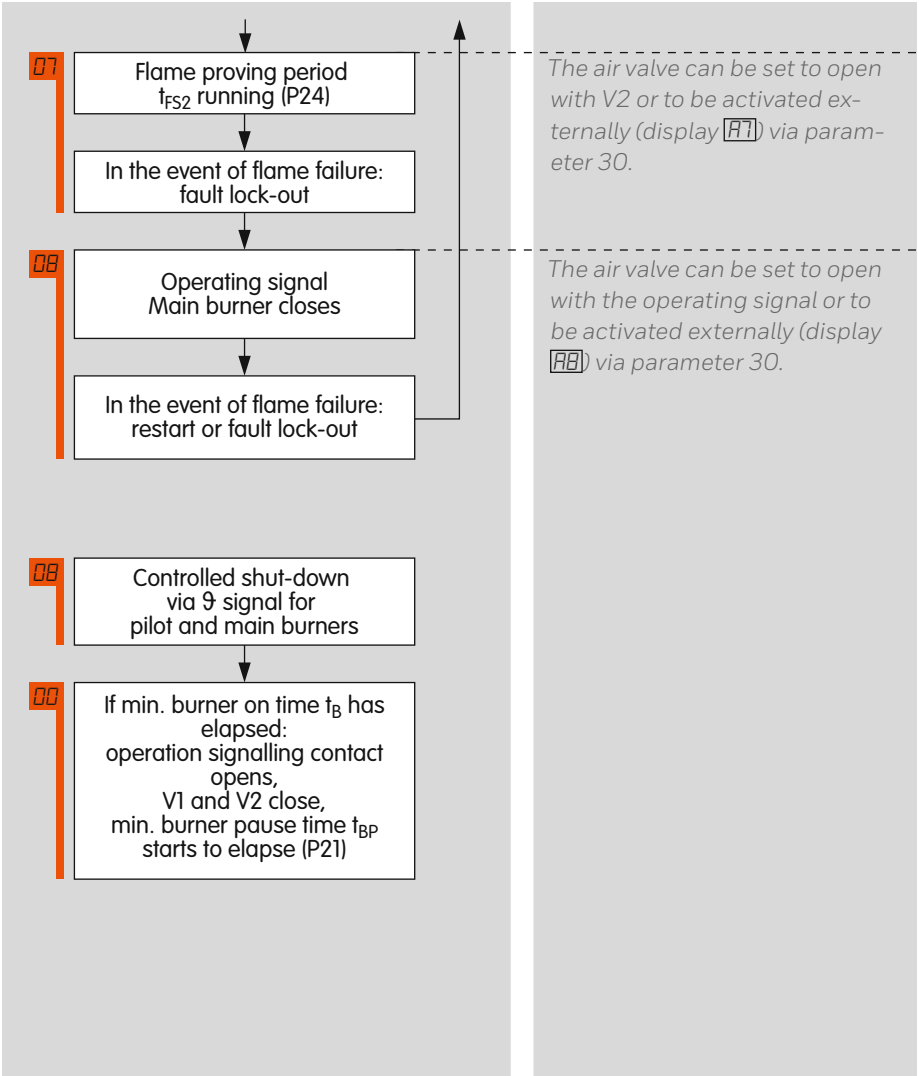

Behaviour of the pilot burner in the event of flame failure during operation

If the flame fails during operation, either an immediate fault lock-out or a restart occurs. This procedure can be set via the optical interface (parameter 12, “Pilot burner restart”).

Start-up of the main burner without flame signal

If no flame is detected during the safety time t_{SA2}, either a fault lock-out occurs or up to two further start-up attempts occur. The required functions and, if applicable, the number of start-up attempts must be specified when ordering (parameter 11, “Main burner start-up attempts”).

Behaviour of the main burner in the event of flame failure during operation

If the flame fails during operation, either an immediate fault lock-out or a restart occurs. This procedure can be set via the optical interface (parameter 13, “Main burner restart”).

3.5 Program status and fault messages

Program status	DISPLAY	Fault message (flashing)	BCU 480	BCU 480..B1
BCU switched off	--			●
Start-up position/Standby	00		●	●
Purge	P0		●	●
Waiting time/Pause time	1	Flame simulation	●	●
Safety time on start-up, pilot burner	2	Start-up without flame signal, pilot burner	●	●
Flame proving period, pilot burner	3	Flame failure during flame proving period, pilot burner	●	●
Operation, pilot burner	4	Flame failure during operation, pilot burner	●	●
Waiting time, main burner	5	Flame simulation, main burner	●	●
Safety time on start-up, main burner	6	Start-up without flame signal, main burner	●	●
Flame proving period, main burner	7	Flame failure during flame proving period, main burner	●	●
Operation, main burner	8	Flame failure during operation, main burner	●	●
	10	Too many remote resets	●	●
Air valve	A		●	●
Pre-ventilation	A1		●	●
Post-ventilation	A0		●	●
Cooling	A0		●	●
	d0	Air pressure switch “no flow” state	●	●
	dP	No air flow during purge	●	●
	dX	No air flow in position X	●	●
High temperature operation	. .		○	○
	Pb	Bus fault		●

Program status	DISPLAY	Fault message (flashing)	BCU 480	BCU 480..B1
	30	EEPROM data change, NFS*		●
	31	EEPROM data change, FS*		●
	32	Undervoltage in power pack		●
	33	Faulty parameterization		●
	bE	Bus module fault		●
	51	Safety interlock failure	●	●
	52	Permanent remote reset	●	●
	53	Timing cycle too short	●	●

In Manual mode, two dots will blink on the display in program status 01 – 08.
● = standard, ○ = option.
** FS = input/output, safety circuit, NFS = input/output, control system.*

4 Parameters

Description	Parameter	Value range	Factory default setting	Adjustable*
Flame signal, pilot burner	01	0 – 99 µA		
Flame signal, main burner	02	0 – 99 µA		
Program status when the most recent fault occurred	03	x0 – x8		
Switch-off threshold, pilot burner	04	1 – 20 µA	1 µA	●
Switch-off threshold, main burner	05	1 – 20 µA	1 µA	●
Start-up attempts, pilot burner**	10	1 – 4	1	
Start-up attempts, main burner**	11	1 – 4	1	
Restart, pilot burner	12	0; 1	0	●
Restart, main burner	13	0; 1	0	●
Safety time during operation for V1 and V2 t_{SB}	14	1; 2 s	1 s	
Flame simulation check in start-up position/standby	15	0; 1	1	●
Permanent pilot burner	16	0; 1	1	●
Minimum burner on time t_B	20	25 s	t_{SA}	●
Minimum burner pause time t_{BP}	21	0 – 250 s	0 s	●
Pilot burner safety time on start-up t_{SA1}**	22	3; 5; 10 s		
Pilot burner flame proving period t_{FS1}	23	0 – 25 s	0 s	●
Main burner safety time on start-up t_{SA2}**	24	3; 5 s		
Main burner flame proving period t_{FS2}	25	0 – 25 s	0 s	●
Air valve control	30	0; 1; 2; 3	0	●
Air valve can be activated externally on start-up	31	0; 1	0	●
Air valve closed/can be activated in the event of malfunction	32	0; 1	1	●

Description	Parameter	Value range	Factory default setting	Adjustable*
High temperature operation**	33	2; 3		
Manual mode limited to 5 minutes	34	0; 1	1	●
UVS check (1 x in 24 hours)	35	0; 1	0	●
Low fire over-run time**	36	0; 5; 15; 25 s	0 s	●

* *Adjustable using BCSoft software and a PC opto-adapter*
** *Please quote in your order.*
0 = Function inactive,
1 = Function active.

On parameterization, ensure that the program sequence started matches the application. This parameter may be set in this way only if the burner can restart as intended in all operating phases.

4.1 Scanning the parameters

During operation, the 7-segment display shows the program status, see page 27 (Program status and fault messages).

The flame signal and all following parameters of the BCU can be scanned one after the other by repeatedly pressing the Reset/Information button (for 2 s).

In the event of a fault, the BCU halts the program run, the display blinks and it then displays the cause of the fault in coded form.

4.2 Flame control

4.2.1 Flame signal, pilot burner

Parameter 01

Flame signal of the pilot burner, display in µA, measuring range: 0 – 30 µA.

4.2.2 Flame signal, main burner

Parameter 02

Flame signal of the main burner, display in µA, measuring range: 0 – 30 µA.

4.2.3 Program status when the most recent fault occurred

Parameter 03

This indicates the program status in which the last burner fault occurred (e.g. the unit indicates that a flame simulation has been detected with a blinking 01).

In parameter 03, it is now shown which program position the unit was in when the fault was detected (waiting time 01 or standby 00).

Result: a flame simulation was detected during the waiting time or standby.

4.2.4 Switch-off threshold of the flame amplifier

Parameter 04, pilot burner switch-off threshold
Parameter 05, main burner switch-off threshold

The sensitivity at which the burner control unit still detects a flame can be set between 1 and 20 µA.

Example: in the case of UV control with the UV sensor UVS, the signal of the burner to be monitored is influenced by other burners.

The set value can be incremented in parameter 04 so that only the flame of the system's "own" burner is detected.

The measured flame signal of the system's "own" burner should be at least 3 µA (empirical value) higher than the set switch-off threshold.

4.2.5 High temperature operation in the case of BCU..D2 or BCU..D3

Parameter 33

Operation of firing systems at temperatures above 750°C. The BCU features a safety-relevant DI input (Digital Input). This input supports the “High temperature operation” function. If firing systems are operated above 750°C, the system is considered to be an item of high temperature equipment (see EN 746-2). Flame control must be in operation until the furnace wall temperature has exceeded 750°C. Note the requirements of the Standards!

Frequently, flame control is dispensed with so as to achieve a particularly high flexibility of the installation. This means that no incorrect flame signals, e.g. signals from a UV sensor which are interpreted as extraneous signals due to reflection of UV radiation, may lead to faults.

When the DI input is activated, the burner control unit reverts to high temperature operation. This means: **the BCU operates without evaluation of the flame signal. The safety function of the device-internal flame control system is placed out of operation.**

In High temperature mode, the gas valves are opened without flame control.

The precondition for high temperature operation is that an external flame safeguard ensures the presence of the flame in fail-safe manner indirectly via the temperature. For this purpose, we recommend a safety temperature monitor with double thermocouple (DIN 3440). Sensor discontinuity, sensor short-circuit, failure of a component or mains failure must set the installation to a safe state.

The voltage may be applied to the DI input (terminal 6) so as to activate high temperature operation only when the temperature at the furnace wall has exceeded 750°C. The BCU starts the burner as usual, without monitoring the presence of the flame.

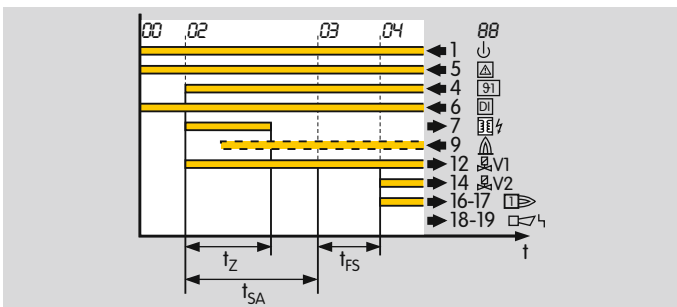

If the temperature in the furnace chamber drops below 750°C, the DI input must be disconnected from the electrical power supply and the furnace must be operated with the internal flame control system.

The BCU then responds, depending on setting:
Parameter 33 = 2 (BCU..D2)

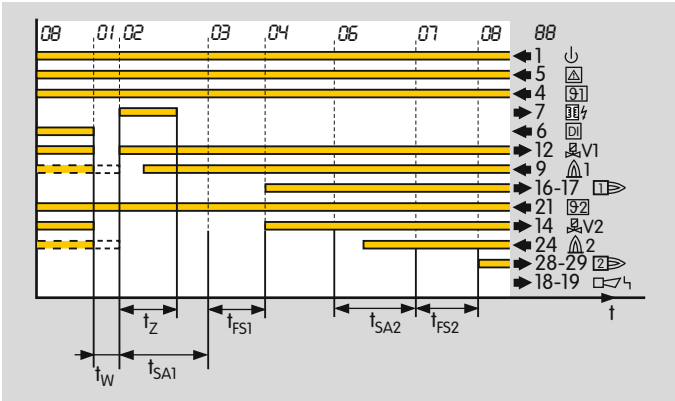

The BCU switches off the burner once the DI input has been disconnected from the electrical power supply and restarts with flame simulation check (recommended in the case of UV control with UVS).

Parameter 33 = 3 (BCU..D3)

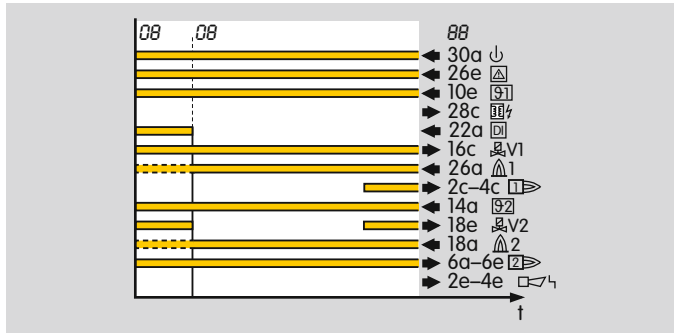

The burner remains in operation and the BCU performs flame control again (recommended in the case of ionization control or UV control with UVD).

If no flame signal is present when high temperature operation is deactivated, the burner control unit performs a fault lock-out, regardless of parameter 33.

Fault, pilot burner

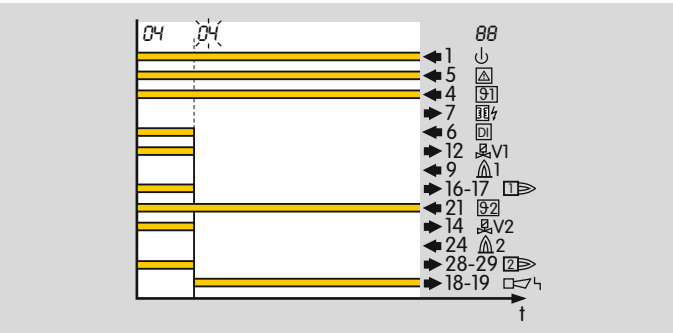

Fault, main burner

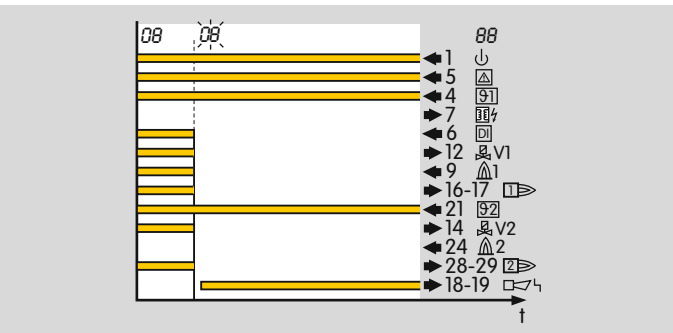

4.2.6 UVS check

Parameter 35

An automatic restart of the burner control unit can be activated every 24 hours via this parameter. The time starts each time the start-up signal (ϑ) is applied.

Parameter 35 = 0: Unlimited burner operation.

Parameter 35 = 1: An automatic restart is activated once every 24 hours.

It must be ensured in this case that the program sequence started matches the application. This parameter may be set in this way only if the burner can restart as intended in all operating phases.

UV sensor for intermittent operation

For intermittent operation, the operating state of the complete system is limited to 24 h pursuant to EN 298. To meet the requirement for intermittent operation, the burner is shut down and restarted automatically after an operating time of 24 hours. The restart does not meet the requirements of EN 298 for UV sensor continuous operation because the required self-test (at least once per hour) is not performed while the burner is operating.

This shut-down and subsequent restart are performed in the same way as a normal controlled shut-down. This process is controlled independently by the BCU and therefore it must be checked whether the industrial process permits the pause in heat supply it creates.

4.3 Pilot and main burner monitoring

Automatic burner control unit BCU 480 for pilot and main burner combination of unlimited capacity.

Pilot burner: single-stage-controlled.

Main burner: modulating or stage-controlled.

The burner control unit BCU 480 has separate start-up signal inputs for the pilot burner (terminal 4) and the main burner (terminal 21). The burner control unit coordinates the program run (the interplay) of both burners. If required, the main burner can be started once the pilot burner has reached its operating position. Benefit: the time for starting up the main burner can be reduced as low as its safety time. By using two flame amplifiers, the pilot and main burners can be monitored separately.

The BCU 480 can also be used on indirectly ignited surface burners with end point monitoring.

Three different operating modes are possible:

Permanent pilot burner

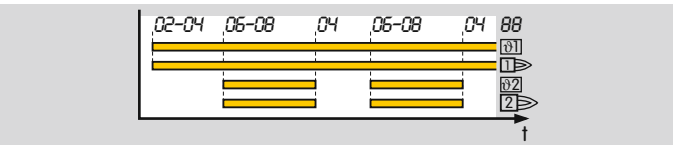

For applications which require a high system availability or where a continuously burning flame is necessary. The pilot burner is ignited once and remains constantly in operation. The main burner is controlled separately.

Intermittent pilot burner

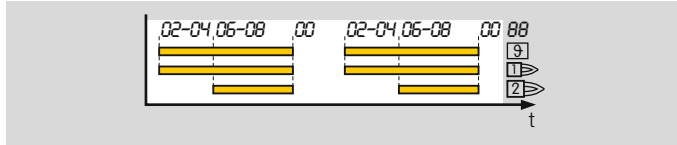

Pilot and main burners are controlled with one start-up signal (terminals 4 and 21 in parallel). The main burner starts automatically after the operating signal from the pilot burner has been detected. Operation is terminated simultaneously for both burners.

Interrupted pilot burner

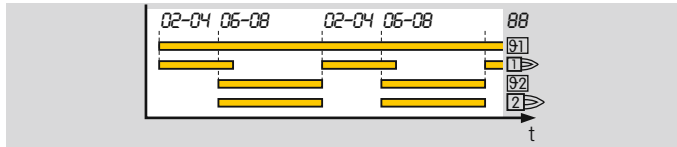

The pilot burner is switched off during the main burner safety time t_{SA2}. This type of flame control is required if no distinction can be made between the flame signals of the pilot and main burners (e.g. if both burners can be monitored with a single UV sensor). If the start-up signal for the pilot burner is applied continually, the pilot burner restarts immediately after the main burner has been switched off.

4.3.1 Permanent pilot burner

Parameter 16 = 1

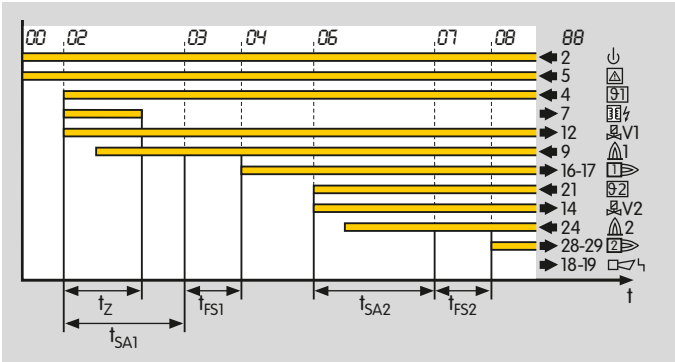

Operating mode: Permanent pilot burner

In the “Permanent pilot burner” operating mode, the pilot burner remains in operation until its start-up signal drops.

If this parameter is activated (P16 = 1), both flames are controlled independently in the case of pilot and main burner monitoring.

Operating mode: Intermittent pilot burner

Start-up as in the illustration “Permanent pilot burner” with the difference being that the start-up signal for pilot and main burners is applied synchronously and that immediately after the flame proving period t_{FS1}, the main burner is started.

4.3.2 Interrupted pilot burner

Parameter 16 = 0

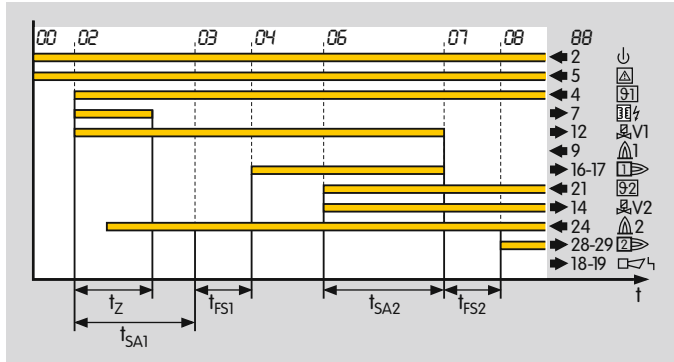

Operating mode: Interrupted pilot burner

If parameter 16 = 0, the pilot burner is switched off once the safety time t_{SA2} has elapsed. In this setting, the flame signal can be connected to terminals 24 or 9.

The pilot burner is switched off after the main burner safety time t_{SA2} has elapsed.

4.4 Behaviour in start-up position/standby

4.4.1 Flame simulation check in start-up position/ standby

Parameter 15

This defines the instant for the flame simulation check.

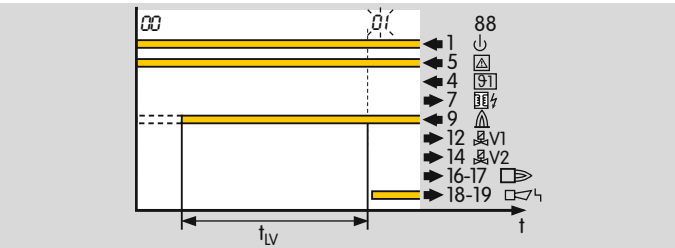

If the BCU notices an extraneous signal during the flame simulation check, it starts the flame simulation delay time t_{LV} (25 s). If the extraneous signal is discontinued during this period, the burner can start up. Otherwise, a fault lock-out occurs. 1 blinks on the display if an extraneous signal is detected by the pilot burner and 5 blinks if an extraneous signal is detected by the main burner.

Parameter 15 = 0: The flame simulation check is conducted after applying the start-up signal (ϑ) during the waiting time t_W.

Parameter 15 = 1: The flame simulation check is conducted provided no start-up signal (ϑ) is applied (during the so-called start-up position/standby). This allows fast start-up of the burner since there is no waiting time t_W.

The burner must have been switched off for at least 4 s before start-up in order for the flame simulation check to be conducted correctly.

Flame simulation check depending on parameter 16, see page 37 (Permanent pilot burner) and (Interrupted pilot burner):

Parameter 15 = 1, parameter 16 = 1

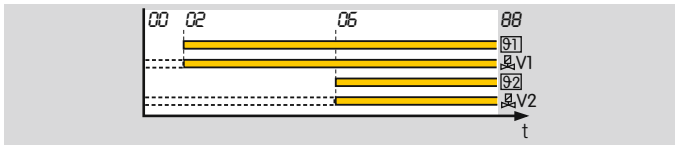

Parameter 15 = 0, parameter 16 = 1

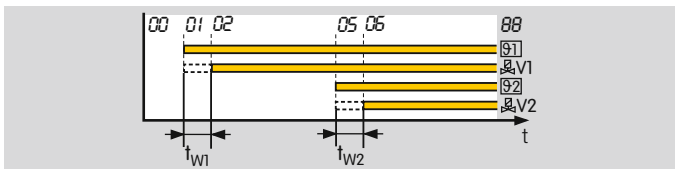

Parameter 15 = 1, parameter 16 = 0

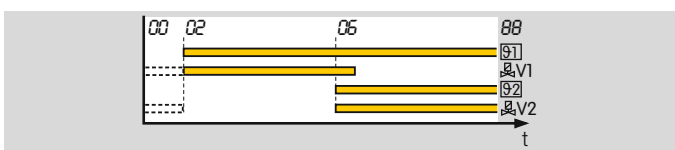

Parameter 15 = 0, parameter 16 = 0

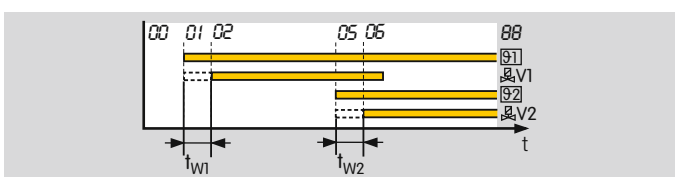

4.4.2 Minimum burner pause time t_{BP}

Parameter 21

Programmable time between 0 and 250 s

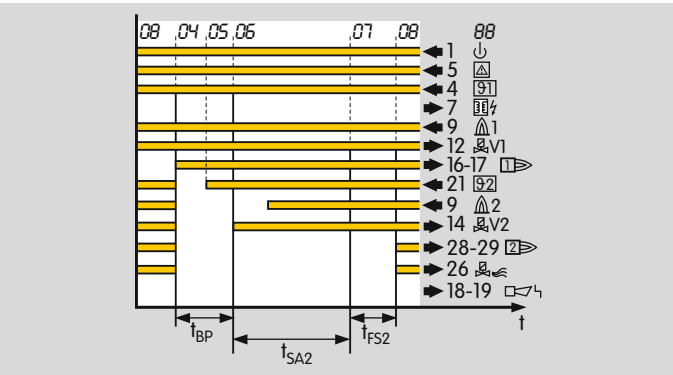

An immediate restart of the burner after a controlled shut-down, a start-up attempt, restart, cooling or purging is prevented by the pause time. The pause time starts when the air valve is switched off. If a start-up signal (ϑ) is applied before expiry of this time, start-up is delayed until the end of the pause time.

After the pause time, the burner is started if the start-up signal (ϑ) is applied.

The minimum burner pause time t_{BP} serves to adapt the program sequence to the requirements of the application.

The time should be set such that the system can be moved to ignition position, i.e. butterfly valves can be closed and, possibly, gas can be flared off, before a restart occurs.

Example of application

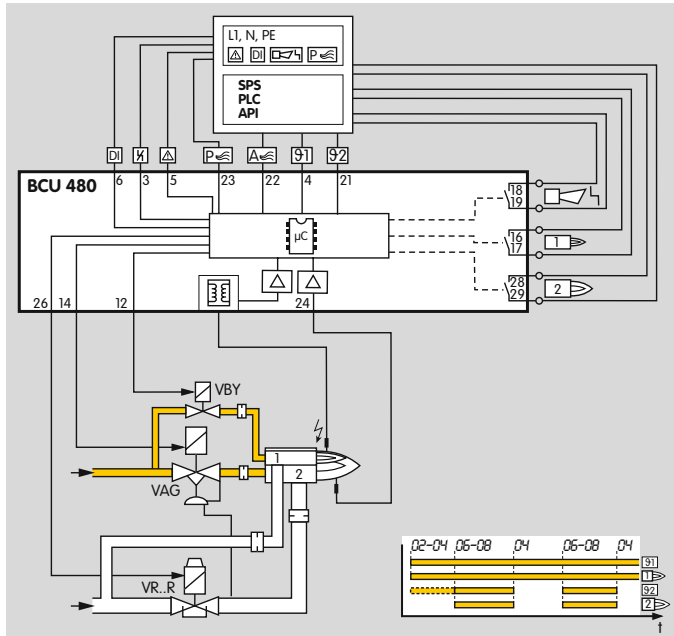

The pause time has an effect on the behaviour of the main burner only. Reason: the pilot burner is only used in single-stage operation.

4.5 Behaviour during start-up

4.5.1 Safety time on start-up t_{SA}

Pilot burner

Parameter 22

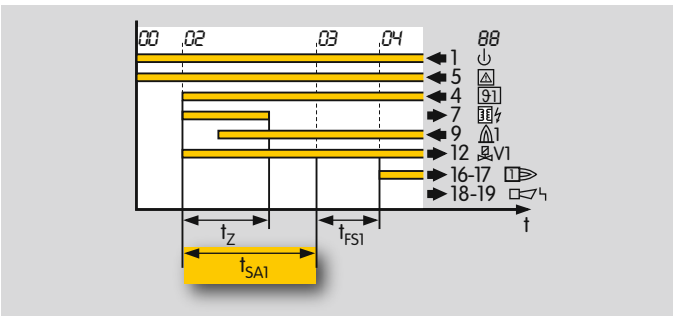

This indicates the safety time on start-up t_{SA1} for the pilot burner.

Main burner

Parameter 24

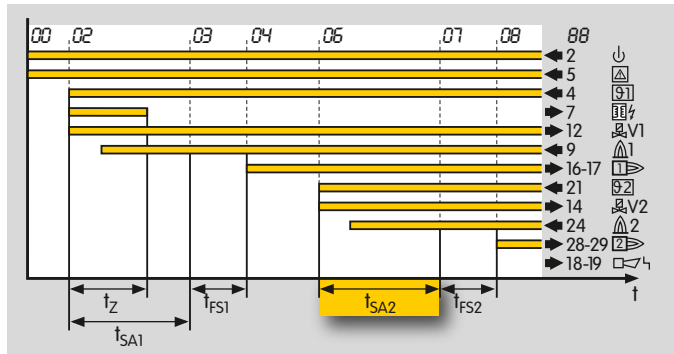

This indicates the safety time on start-up t_{SA2} for the main burner.

4.5.2 Flame proving period t_{FS}

Pilot burner

Parameter 23

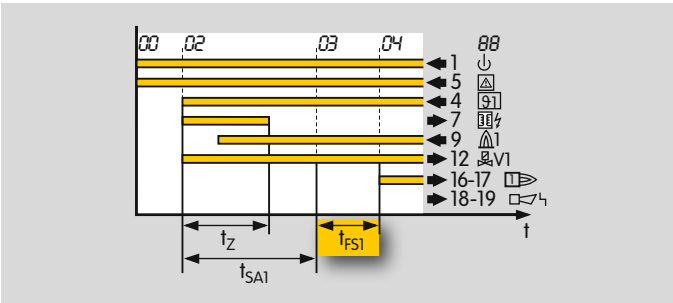

Main burner

Parameter 25

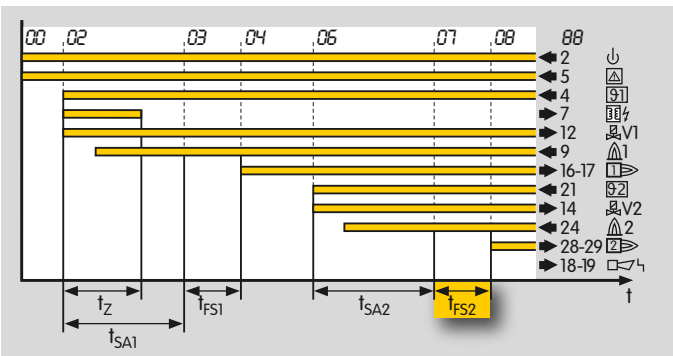

Programmable time between 0 and 25 s.

This time elapses before the BCU starts the next program step so as to give the flame time to stabilize.

4.5.3 Minimum burner on time t_B

Parameter 20

Programmable time in the range from minimum safety time on start-up t_{SA2} to maximum 25 s during which the main burner remains in operation. In the case of brief activation of the start-up signal input (ϑ2) (e.g. with a pulse), the burner on time t_B is started, and the main burner remains in operation for at least this period.

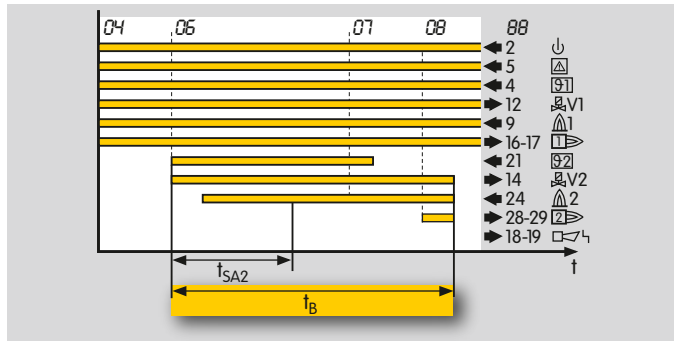

4.5.4 Burner start-up attempts

Pilot burner

Parameter 10

This indicates the number of possible start-up attempts of the burner.

In accordance with EN 746-2, three start-ups are permitted in specific cases if the safety of the installation is not impaired (note the requirements of the Standards).

If no flame is detected or if the air flow on the BCU fails during start-up, either a fault lock-out occurs or up to two further start-up attempts occur. The required functions and, if applicable, the number of start-up attempts must be specified when ordering.

1 start-up attempt

Parameter 10 = 1

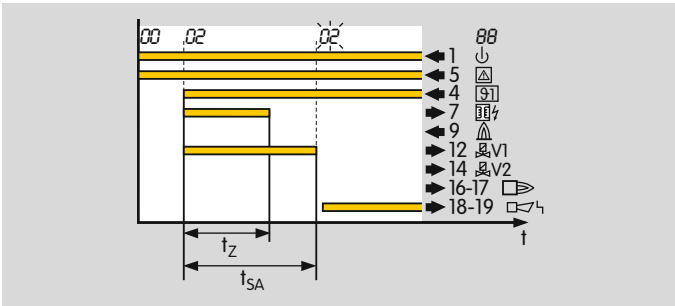

If no flame forms during start-up, a fault lock-out is performed after expiry of time t_{SA}. The display blinks and shows the cause of the fault.

2 or 3 start-up attempts

Parameter 10 = 2, 3

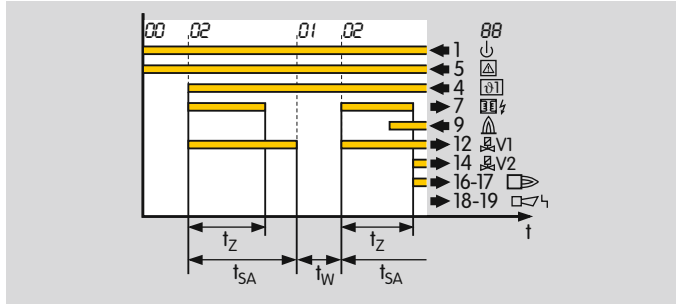

If several start-up attempts are set at the works and if the BCU detects a flame failure during start-up, it closes valve V1 after the safety time t_{SA1} has expired and attempts to start up again. After the last programmed start-up attempt has been completed, the burner control unit conducts a fault lock-out. The display blinks and shows the cause of the fault.

Main burner

Parameter 11

This indicates the number of possible start-up attempts of the main burner.

In accordance with EN 746-2, three start-ups are permitted in specific cases if the safety of the installation is not impaired (note the requirements of the Standards).

If no flame is detected during start-up, either a fault lock-out occurs or up to two further start-up attempts occur. The required functions and, if applicable, the number of start-up attempts must be specified when ordering.

1 start-up attempt

Parameter 11 = 1

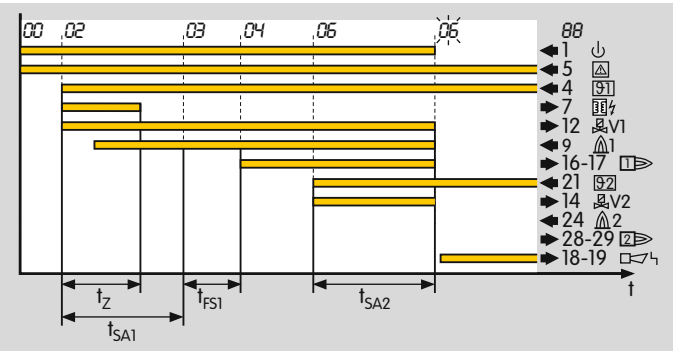

If no flame forms during the start-up of the main burner, a fault lock-out is performed after expiry of time t_{SA2}. The display blinks and shows the cause of the fault.

2 or 3 start-up attempts

Parameter 11 = 2, 3

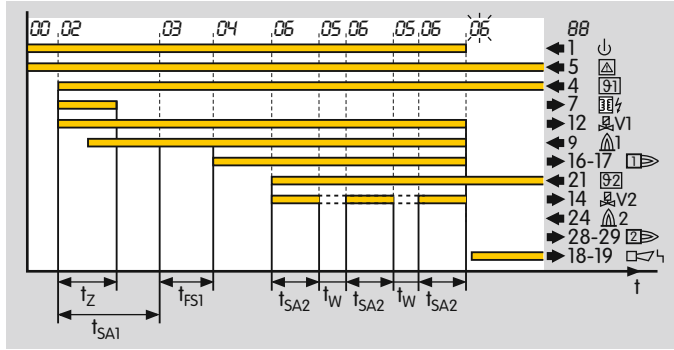

If several start-up attempts are set at the works and if the BCU does not detect a flame signal during start-up, it closes valve V2 after the safety time t_{SA2} has expired and attempts to start up again. After the last programmed start-up attempt has been completed, the burner control unit conducts a fault lock-out. The display blinks and shows the cause of the fault.

4.6 Behaviour during operation

4.6.1 Safety time during operation t_{SB} for pilot and main burners

Parameter 14

This indicates the safety time during operation t_{SB} for valves V1 and V2.

The default in accordance with EN 298 is 1 s.

The BCU has also the available option of a safety time during operation t_{SB} of 2 s. Prolonging the time increases the installation availability in the case of brief-duration signal fades (e.g. fades of the flame signal).

In accordance with EN 746-2, the safety time of the installation during operation (including closing time of the valves) may not exceed 3 s. (Note the requirements of the Standards!)

4.6.2 Fault lock-out or restart, pilot burner

Parameter 12

This parameter determines whether the BCU initiates a one-off restart or performs an immediate fault lock-out for the burner after a flame failure (see also page 57 (Project planning information)).

Immediate fault lock-out in the event of flame failure

Parameter 12 = 0: Pilot burner fault lock-out.

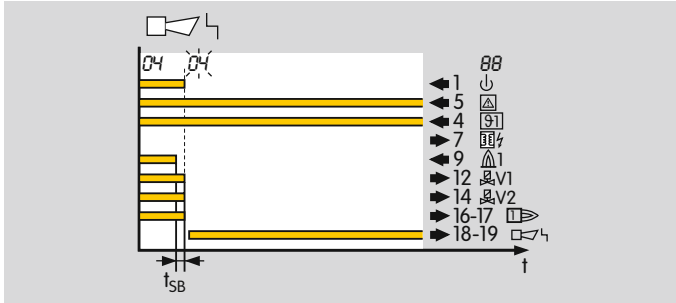

After a fault lock-out, the burner control unit can be reset, either with the button on the front panel or using an external button. Several burner control units can be reset in parallel using the external button.

The BCU cannot be reset by mains failure. The fault signalling contact does, however, open as soon as the mains voltage fails.

See also parameter 32, page 54 (Behaviour of the air valve in the event of a fault lock-out).

Restart in the event of flame failure

Parameter 12 = 1: Restart in the event of flame failure.

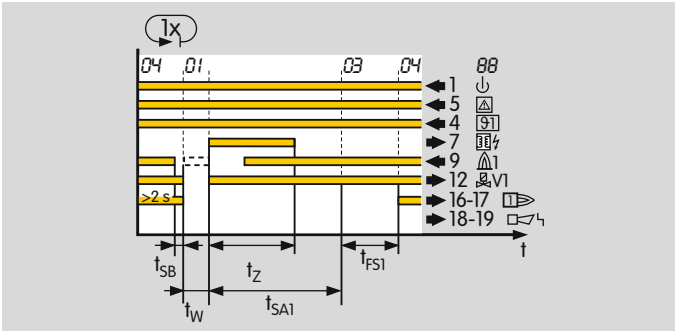

If the BCU detects a flame failure after a minimum operating time of 2 s, the valves are closed and the operation signalling contact is opened within time t_{SB}.

The burner control unit now attempts to restart the burner once. If the burner does not function, a fault lock-out occurs. The display blinks and shows the cause of the fault.

In accordance with EN 746-2, a restart may be conducted only if the safety of the installation is not impaired. Restart is recommended for burners which occasionally display unstable behaviour during operation.

The precondition for a restart is that activation of the restart allows the burner to restart as intended (in all operating phases). In this case, it must be ensured that the program sequence started by the BCU matches the application.

4.6.3 Fault lock-out or restart, main burner

This parameter determines whether the BCU starts a one-off restart or performs an immediate fault lock-out for the main burner after a flame failure (see also Project planning information).

Immediate fault lock-out in the event of flame failure

Parameter 13 = 0: Main burner fault lock-out.

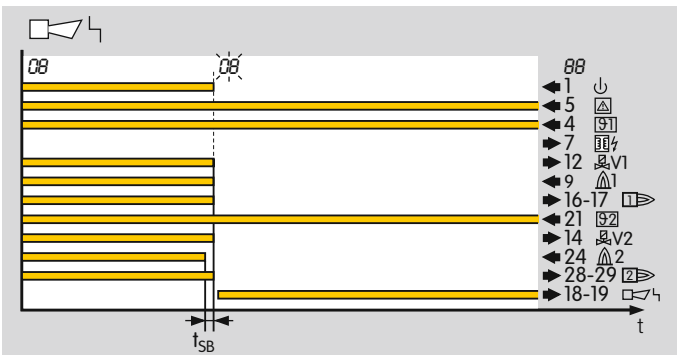

After a flame failure, the burner control unit performs a fault lock-out within the safety time during operation t_{SB}. This involves disconnecting the power from the gas valves and the ignition transformer. The fault signalling contact closes, the display blinks and shows the current program status, see table on page 27 (Program status and fault messages).

After a fault lock-out, the burner control unit can be reset, either with the button on the front panel or using an external button. Several burner control units can be reset in parallel using the external button.

The BCU cannot be reset by mains failure. The fault signalling contact does, however, open as soon as the mains voltage fails.

See also page 54 (Behaviour of the air valve in the event of a fault lock-out).

Restart in the event of flame failure

Parameter 13 = 1: Restart in the event of flame failure.

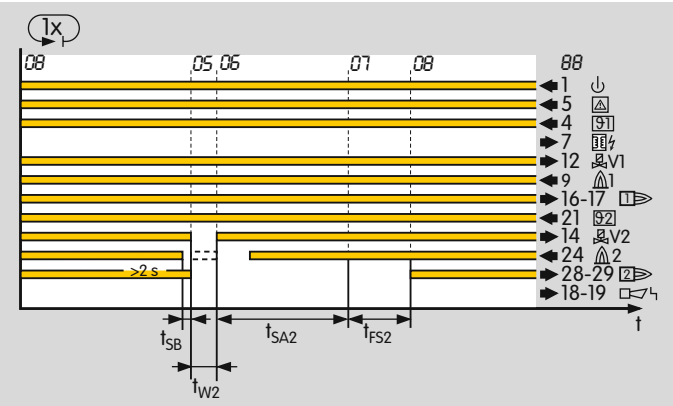

If the BCU detects a flame failure after a minimum operating time of 2 s, valve V2 is closed and the operation signalling contact is opened within time t_{SB}.

The burner control unit now attempts to restart the main burner once. If the burner does not function, a fault lock-out occurs. The display blinks and shows the cause of the fault.

In accordance with EN 746-2, a restart may be conducted only if the safety of the installation is not impaired. Restart is recommended for burners which occasionally display unstable behaviour during operation.

The precondition for a restart is that activation of the restart allows the burner to restart as intended (in all operating phases). In this case, it must be ensured that the program sequence started by the BCU matches the application.

4.6.4 Program status on last fault

Parameter 03

This indicates the program status in which the last burner fault occurred.

Example: the unit indicates that the safety interlocks have been interrupted with a blinking 51.

Parameter 03 can now be used to scan in what program status the BCU was when the fault was detected.

4.7 Air valve control on BCU..L

Parameter 30, Behaviour of the air valve during operation.

Parameter 31, Behaviour of the air valve during start-up.

Parameter 32, Behaviour of the air valve in the event of a fault lock-out.

The BCU..L features an adjustable air valve control. The display shows that purging is currently being carried out with PO. A indicates that the air valve is being activated for cooling or heating.

The BCU..L supports the following functions:

- Purge
- Cooling in start-up position/standby
- Switching of the burner between low and high burner capacity during operation via the air valve
- To start up the burner as intended, external activation of the air valve can be blocked during start-up (prevents synchronization problems between the BCU and the central control system).
- Setting the air valve parameters, so that it
  - opens with valve V1
  - opens with valve V2
  - opens once the main burner has reached its operating position
- Low fire over-run time t_{KN} after a controlled shutdown

4.7.1 Purge

In the case of multiple burner applications, burners with mechanical combustion air supply are used. The air for combustion and pre-purge is supplied by a central fan controlled by a separate logic. This logic determines the purging time.

The BCU..L..E1 with adapted power management supports centrally-controlled pre-purge or post-purge. The BCU..L is informed that purging is currently being performed by input 22. It then opens the air valve, regardless of the status of the other inputs (purging has priority). The display indicates PO.

On BCUs without power management, input 22 and input 5 (safety interlocks) must be activated for purging, see connection diagrams on pages 14 (BCU 480), 16 (BCU 480..B1) and 18 (BCU 480..P with industrial plug connector).

4.7.2 Cooling in start-up position/standby

The air valve can be activated externally via input 23 for cooling in the start-up position. During activation of the air valve the display shows AO, indicating that cooling is currently being carried out.

4.7.3 Burner start

Parameters 30 and 31 determine the behaviour of the air valve during burner start.

4.7.4 Air valve opens in the case of external activation (not during start-up)

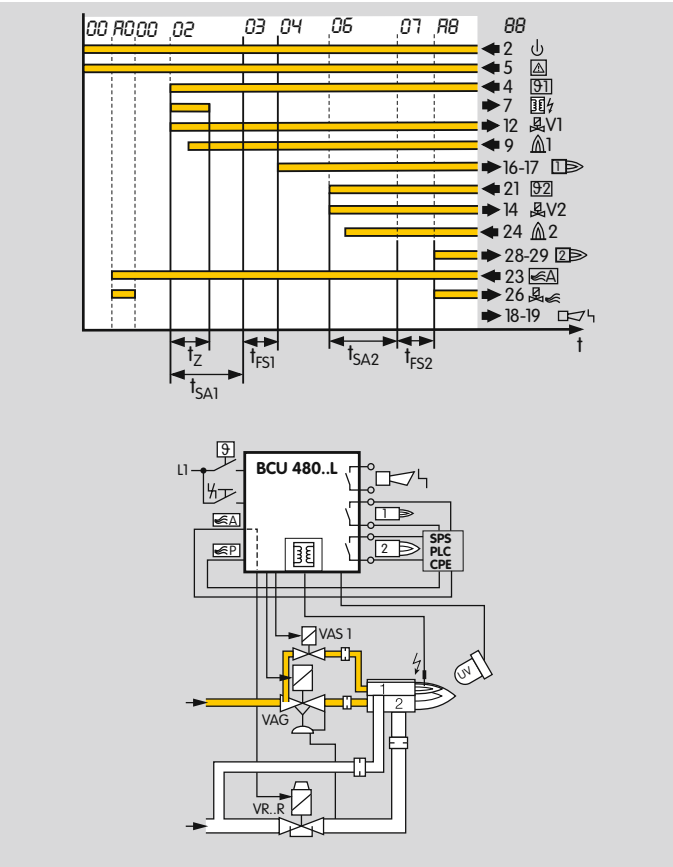

Parameter 30 = 0: The air valve opens if it is activated externally via input 23.

Parameter 31 = 0: The air valve remains closed during start-up even if it is activated externally.

These settings are required on burners on which the gas/air ratio is controlled via a pneumatic ratio control system and which also need to be started at low fire, e.g. on two-stage-controlled burners. In this case, activation of the air valve during burner start via input 23 must be prevented.

External control allows switchover between low fire and high fire during operation.

4.7.5 Air valve opens in the case of external activation (even during start-up)

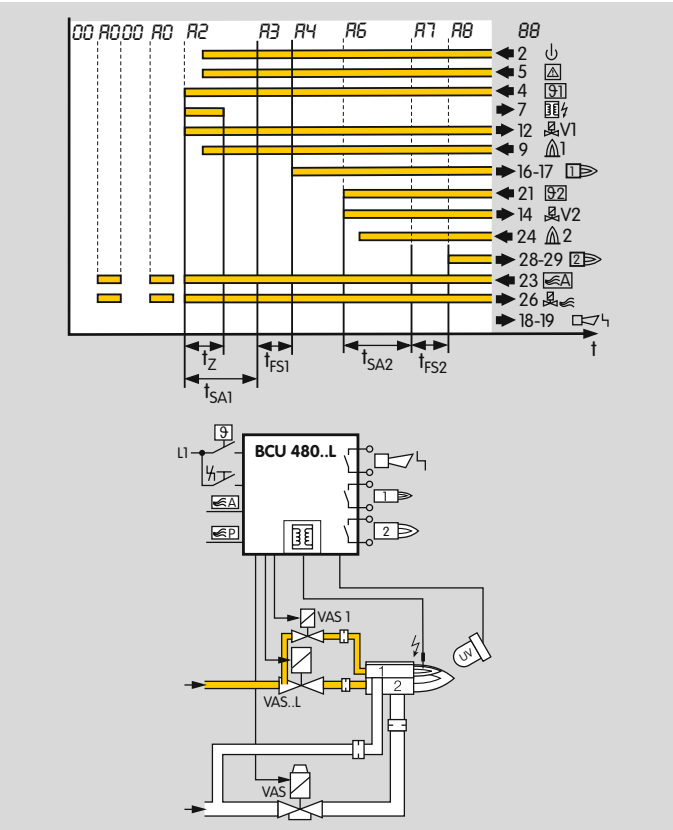

Parameter 30 = 0: The air valve opens if it is activated externally via input 23.

Parameter 31 = 1: The air valve can be activated even during start-up.

These settings may be selected only if the burner can start with full air capacity.

4.7.6 Air valve opens with valve V2

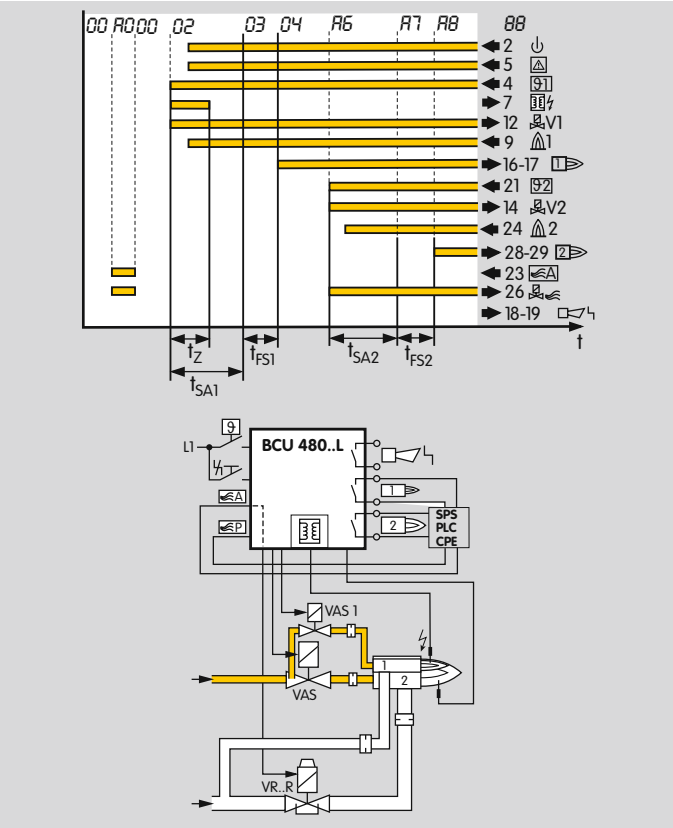

Parameter 30 = 2: The air valve opens simultaneously with valve V2.

Application: single-stage-controlled main burner is switched ON/OFF via the ϑ input.

The air valve can be activated externally via input 23 for cooling the burner in the start-up position/standby.

4.7.7 Air valve opens with operating signal

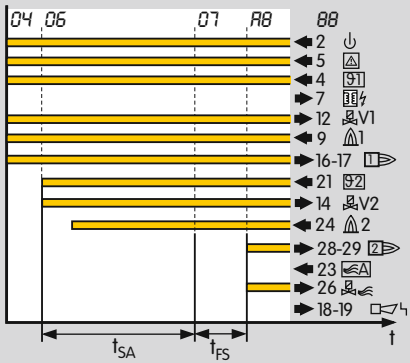

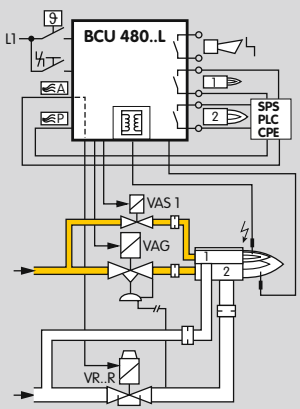

Parameter 30 = 3: The air valve opens simultaneously with the operating signal.

Application: two-stage-controlled main burner is switched ON/OFF via the ϑ input.

The air valve can be activated externally via input 23 for cooling the burner in the start-up position/standby.

4.7.8 Low fire over-run time t_{KN} after a controlled shut-down

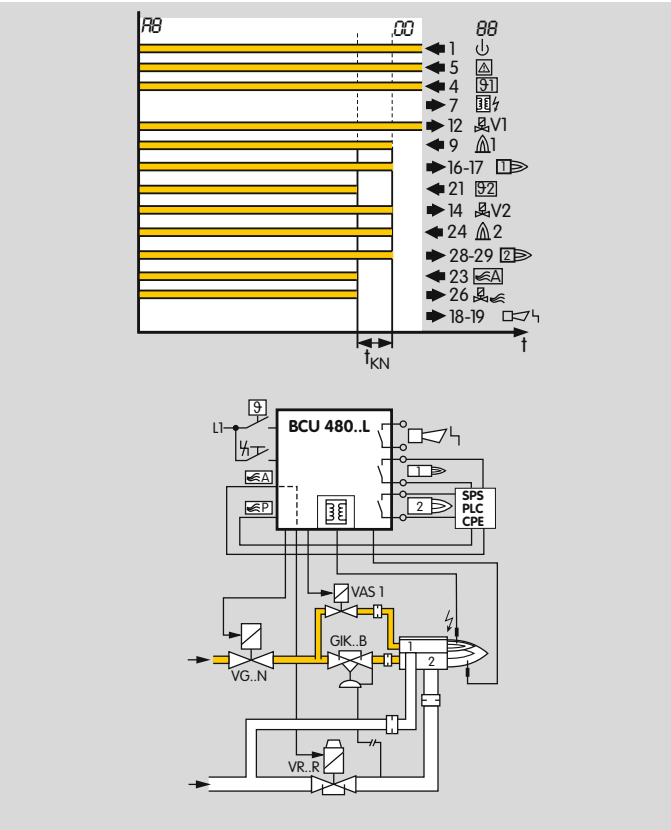

Parameter 36

Settings: 0; 5; 15 or 25 (low fire over-run time in seconds)

This parameter is applicable to systems with a pneumatic
air/gas ratio control system and On/Off control.

Parameter 36 = 0 (low fire over-run time t_{KN} = 0 s):
Without low fire over-run, the gas circuit is closed immediately owing to the quick-closing gas valve in the case of On/Off control. The air circuit closes more slowly. The air flowing in during the closing time increases the O_2 content in the combustion chamber.

Parameter 36 = 5; 15 or 25 (low fire over-run time t_{KN} = 5, 15 or 25 s):
The air valve closes slowly after the activation signal has been switched off. The gas valve remains open for t_{KN}. This means that the burner, after deactivation of the start-up signal (ϑ), is initially adjusted down to low fire and then switched off completely.

Using the low fire over-run function reduces the O_2 content in the furnace atmosphere.

Flame control is still operational. Can be used only in the case of a pneumatic air/gas ratio control system and On/Off control. It must be ensured that no excess gas occurs.

The low fire over-run time has an effect on the behaviour of the main burner only.

Background: the pilot burner is only used in single-stage operation.

4.7.9 Behaviour of the air valve in the event of a fault lock-out

Parameter 32

This determines whether the air valve can be activated in the event of a fault lock-out.

Parameter 32 = 0: The air valve is closed in the event of a fault. It cannot be activated externally via terminal 23.

Parameter 32 = 1: The air valve can be activated externally via input 23 even during a fault, e.g. for cooling.

4.8 Manual mode

For convenient setting of the burner or analyzing faults.

The parameter display is not available in Manual mode. Manual mode can be accessed only if the unit was not in Fault state before switching off. The following times/functions are not active in Manual mode: start-up attempts, restart, minimum burner on time and cycle lock.

If the Reset/Information button is pressed for 2 s during switch-on, the BCU reverts to Manual mode. Two dots blink on the display.

In this operating mode, the burner control unit operates independently of the status of the inputs (apart from the pre-purge input and the safety interlocks. These are of higher priority and will be processed first).

Each time after the button is pressed again, the BCU moves to the next section of the program sequence and stops there. Briefly pressing the Reset/Information button (< 1 s) displays the relevant Manual mode step. When the operating position is reached (program status 4 (Operation, pilot burner) or 8 (Operation, main burner)), the flame signal is indicated instead of the program parameter after approx. 3 s. If there is flame simulation during start-up, the flame signal is displayed immediately.

On units with air valve control, the air valve can be opened and closed repeatedly by pressing the button during operation.

Manual mode can be terminated by switching off the BCU (On/Off button).

4.8.1 Manual mode limited to 5 minutes

Parameter 34

Parameter 34 determines when Manual mode is terminated.

Parameter 34 = 0: Manual mode is not limited in time. If this function has been selected, operation of the furnace may be continued manually in the event of failure of the central control system.

Parameter 34 = 1: Manual mode ends automatically five minutes after the last time the button was pressed. The BCU then moves abruptly back to start-up position/standby.

5 Selection

	T	-3	-5	-10	/3	/5	/1	/2	L	5	15	25	W	R	1	2	3	8	GB[1)]	P[2)]	D2	D3	S2	S3	/2	/3	U	C	B1	/1	E1
BCU 480	○	●	●	●	●	●	●	●	○	○	○	○	●	●	●	●	●	●	●	○	○	○	○	○	○	○	○	○	○	○	○

Order example

BCU 480-5/3/1LW3GBCE1

● = standard, ○ = available. [1)] Not available for BCU..T. [2)] Not in conjunction with PROFIBUS DP (BCU..B1).

5.1 Type code

Code	Description
BCU	Burner control unit
4	Series 4
80	Version for pilot and main burners
3; 5; 10	1st safety time on start-up t_{SA} [s]
/3; /5	2nd safety time on start-up t_{SA} [s]
/1; /2	Safety time during operation t_{SB} [s]
L*	Air valve control
5*; 15*; 25*	Low fire over-run time [s]
W R	Mains voltage: 230 V AC, -15/+10%, 50/60 Hz 115 V AC, -15/+10%, 50/60 Hz
1* 2* 3* 8*	Ignition transformer: TZI 5-15/100 TZI 7-25/20 TZI 7,5-12/100 TZI 7,5-20/33
GB*	Front film in English with additional stickers in D, F, I, NL, E
P*	Industrial plug connector
D2* D3*	High temperature operation in conjunction with: ... UVS ... ionization sensor or UVD
S2*; S3*	Number of start-up attempts, pilot burner
/2*; /3*	Number of start-up attempts, main burner
U* C*	Preparation for UV sensor for continuous operation UVD 1 Additional signal distribution
B1*	For PROFIBUS DP
/1*	9-pin D-Sub bus plug connector
E1*	Power management via phase (L1)

** If "none", this specification is omitted. Please quote the default parameter settings when ordering.*

6 Project planning information

6.1 Cable selection

Use mains cable suitable for the type of operation and complying with local regulations. Signal and control line: max. 2.5 mm^2. Cable for burner ground/PE wire: 4 mm^2. Do not route BCU cables in the same cable duct as frequency converter cables or cables emitting strong fields.

The connection cables are fed into the BCU housing via cable glands. The cable glands are equipped with multiple seal inserts for cable diameters of up to 7 mm. For two cable glands, there is one seal insert each for cable diameters between 7 and 12 mm.

6.1.1 Ionization cable

Use unscreened high-voltage cable, see page 71 (Accessories).

Recommended cable length: max. 50 m.

Lay cable individually and, if possible, not in a metal conduit.

Install well away from mains cables and interference from electro-magnetic sources.

Do not lay together with ignition cable.

6.1.2 Ignition cable

Use unscreened high-voltage cable, see page 71 (Accessories).

Cable length for integrated ignition. max. 5 m (16.4 ft).

Avoid external electrical interference. The longer the ignition cable, the lower the ignition capacity.

Lay cable individually and, if possible, not in a metal conduit.

Do not lay UV/ionization cable and ignition cable together and lay them as far apart as possible.

Screw the ignition cable securely into the ignition transformer and feed it out of the unit on the shortest possible route (no loops) – use the left-hand M20 plastic cable gland.

Only use radio interference suppressed electrode plugs (with 1 kΩ resistor) for ignition electrodes, see page 71 (Accessories).

6.1.3 UV cable

Recommended cable length: max. 50 m.

Install well away from mains cables and interference from electro-magnetic sources.

Do not lay together with ignition cable.

6.2 Ignition electrode

6.2.1 Electrode gap

Gap between electrode and burner ground:
2 mm ± 0.5 mm.

6.2.2 Star electrodes

We recommend using 7.5 kV ignition transformers on burners with star electrodes.

6.3 Calculating the safety time t_{SA}

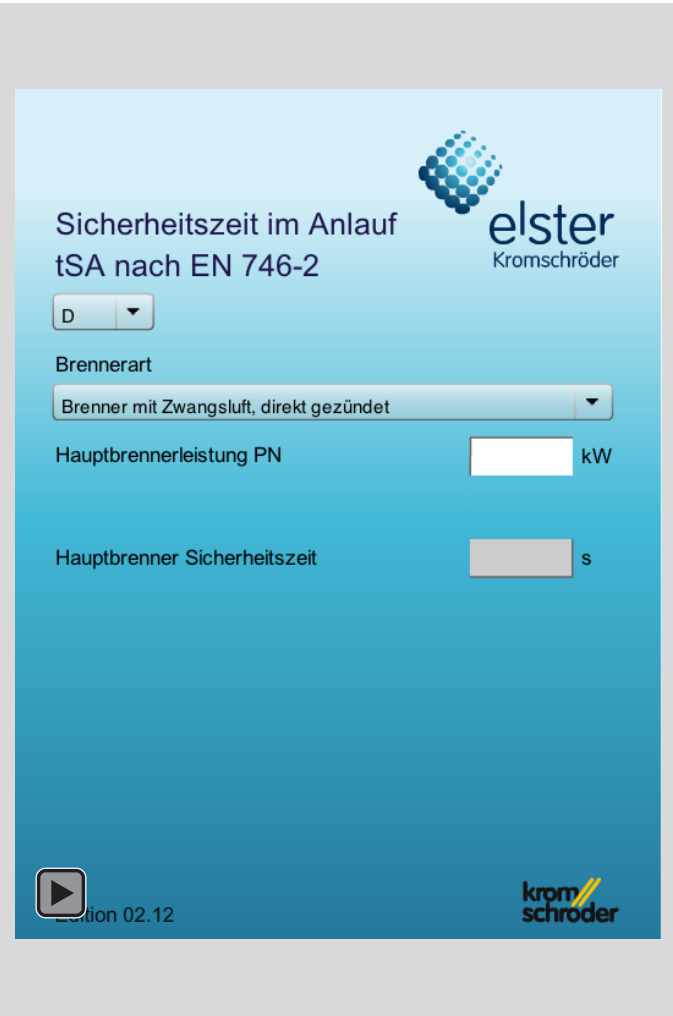

6.4 Minimum burner on time

Even if the start-up signal (ϑ) is applied only briefly, the time set under parameter 20 elapses. The minimum burner on time t_B can be extended beyond the safety time t_{SA} to max. 25 s.

The signal inputs for the pilot/main burner start-up signal cannot be used for a safety shut-down because the unit controls the valves until the minimum burner on time has elapsed.

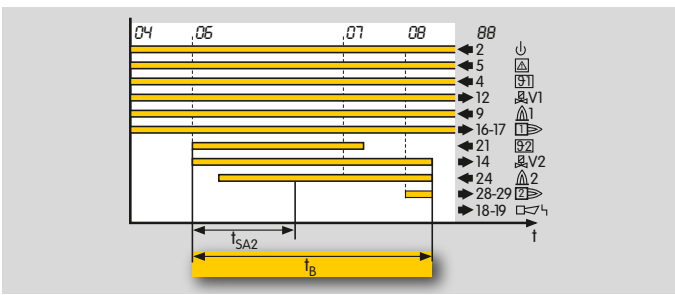

In the case of pilot/main burner monitoring, the minimum burner on time only has an effect on the behaviour of the main burner. The minimum burner on time for the pilot burner is limited to the safety time on start-up (t_{SA}).

Background: the pilot burner is only used in single-stage operation.

6.5 Safety interlocks (Limits)

The limiters in the safety interlock (linking of all the relevant safety control and switching equipment for the use of the application, e.g. safety temperature limiter, minimum and maximum gas pressure, tightness control) must isolate terminal 5 from the voltage supply. If the safety interlock is interrupted or if fuse F1 has tripped, the display shows a blinking 51 to indicate a fault.

If the safety interlocks fail, an immediate program abort with switch-off of all outputs occurs (even during the safety time). If the safety interlocks are operational again or the unit is switched back on, the program run is restarted in standby.

6.6 Protection of safety-relevant outputs

When commissioning, do not switch the safety-relevant outputs to a short-circuit.

Before switching on, ensure that outputs 7, 12 and 14 are not overloaded (> 3 A), using an ohmmeter, for example.

All safety-relevant outputs of the BCU are fused with an internal, non-replaceable fuse, see page 13 (Connection diagrams). This affects the outputs for ignition, gas valve V1 and gas valve V2. In the event that the internal fuse for these outputs blows, the unit must be sent to the manufacturer for repair.

6.7 Emergency off

6.7.1 In the event of fire or electric shock

If there is a risk of fire, electric shock or similar, inputs L1, N and 5 (safety interlocks) of the BCU should be disconnected from the electrical power supply – this should be reflected in the wiring on site.

6.7.2 Via the safety interlocks (limits)

The safety interlock turns off the power to the input 5, such as in the event of low air pressure or similar.Reset

6.8 Reset

6.8.1 Parallel reset

Several automatic burner control units can be reset in parallel using the external button. The BCU cannot be reset by mains failure.

6.8.2 Permanent remote reset

Permanent remote reset gives rise to a malfunction. If a remote reset signal is permanently applied to terminal 3, 52 flashes on the display to indicate a fault.

Reset with a pulse < 1 s.

6.8.3 Automatic remote reset (PLC)

In the case of automatic remote reset (PLC), the reset pulse duration should not exceed 1 second. Check compliance with standards.

If a fault is acknowledged by remote reset too often, error 10 (Too many remote resets) is displayed. The error can only be acknowledged with the Reset/Information button on the unit.

The burner malfunction must be remedied. The malfunction cannot be remedied by changing the method of activation.

6.9 Burner start

A furnace start may only be initiated, if it has been ensured using an appropriate procedure that there is no combustible mixture in the combustion/processing chamber, in the connected areas or in the exhaust gas system (heat exchanger, dust collector). This can be achieved by pre-purge, which occurs immediately before ignition or within the period specified in the operating instructions.

In the case of multiple burner applications, pre-purge is not necessary after a controlled burner shut-down.

Note the requirements of the Standards. For exceptions, see Standards.

6.10 Restart and start-up attempts

The precondition for a restart/start-up attempt is that activation of the restart allows the burner to restart as intended (in all operating phases). In this case, it must be ensured that the program sequence started by the BCU matches the application.

In accordance with EN 746-2, up to three start-ups are permitted in specific cases if the safety of the installation is not impaired (note the requirements of the Standards).

6.11 Fault signalling

The fault signalling contact opens, as soon as the mains voltage fails.

6.12 Protecting the pilot burner from overload

To protect the unit against overload by too frequent cycling of the pilot burner, the number of start-ups within one minute is limited for the BCU. Excessive cycling of the pilot burner triggers a fault message (blinking 53). The max. number of start-ups per minute depends on the safety time t_{SA1} and the ignition transformer used.

t_{SA} [s]	Ignition transformer TZI	Max. start-ups/min.
3	5-15/100	6
5	5-15/100	6
10	5-15/100	3
3	7-25/20	3
5	7-25/20	2
10	7-25/20	1
3	7,5-12/100	6
5	7,5-12/100	4
10	7,5-12/100	2
3	7,5-20/33	4
5	7,5-20/33	3
10	7,5-20/33	2

6.13 Installation

Recommended installation position: vertical (cable glands pointing downwards).

When installing, ensure that there is sufficient space to open the BCU.

From inside

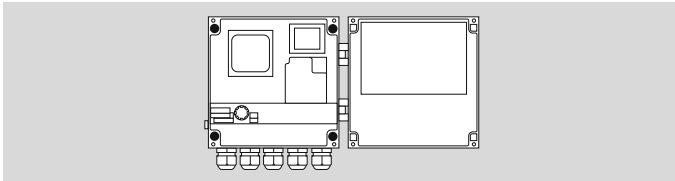

Open BCU and screw on with four screws (Ø 4 mm, min. length 15 mm).

From outside

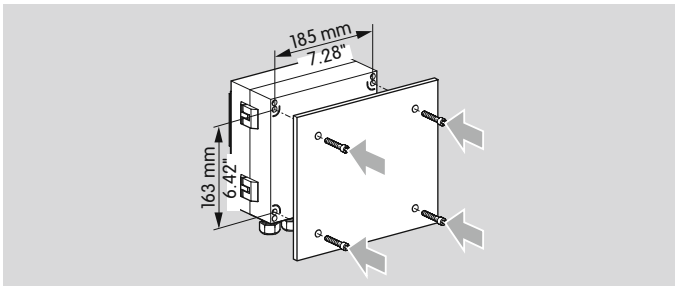

Screw on the closed unit to the rear with 4 self-tapping screws (enclosed).

Otherwise, mount with external securing bars or the fastening set, see page 71 (Accessories).

6.14 Wiring

Electrical connection via plug-in connection terminals (2.5 mm²) and plug-in cable glands. The latter can be removed in order to facilitate installation.

The BCU is suitable for hard wiring only. Do not reverse phase and neutral conductor. Different phases of a three-phase current system must not be installed at the BCU.

No voltage may be connected to the valve and ignition outputs.

No gas valve may be connected to the air valve output (terminal 26).

See page 13 (Connection diagrams) onwards.

6.15 BCU and BCU..E1 (with and without adapted power management)

The BCU is available as a replacement unit for existing systems in which a BCU is already in operation.

We recommend using a BCU with power management (BCU..E1) when planning new systems. It features a new power management scheme for simplified installation and control. The power for the ignition transformer and valves is supplied via the phase (terminal 1) and must no longer be supplied by the safety interlocks. No effort and expenditure is thus required for coupling contactors and their safety devices.

Unit replacement

A BCU without power management may not be replaced with a BCU with power management (BCU..E1). The reverse also applies, i.e. a BCU..E1 may not be replaced with a BCU without power management.

6.16 Signal distributor board

An additional signal distributor board (terminals 30 – 38) can be ordered for wiring additional relays, etc. (BCU..C).

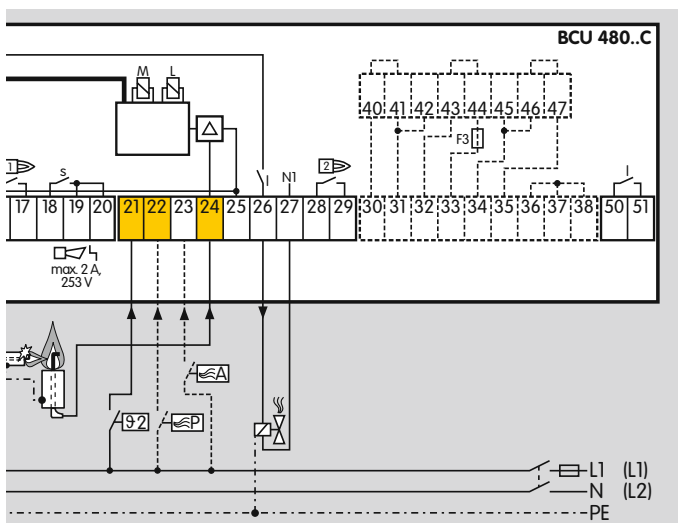

6.17 PROFIBUS DP

6.17.1 Safety-related control signals

Signals from the safety interlocks and digital input are transferred independently of the bus communication by separate cables.

The purge signals can be transferred via the bus communication or by a separate cable.

6.17.2 Wiring the PROFIBUS plug connector

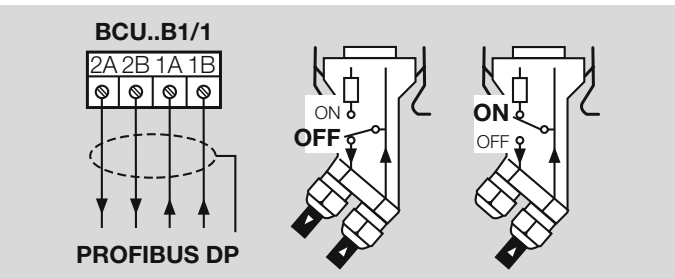

The PROFIBUS plug connector must be ordered separately, see page 71 (Accessories).

Data cables A and B must not be reversed.

The power supply for the bus terminator is provided by the BCU. The bus terminator can be connected in the PROFIBUS plug connector.

Ensure an equipotential bond between the different slaves and masters.

6.17.3 EMC

To achieve a high immunity of the system against electromagnetic interference radiation, a shielded data cable must be used. The shield must be connected to protective earth on both sides using wide-area shield clips that ensure good conductivity.

In addition, it must be ensured that all cables leading to and from the BCU® be installed as far away as possible from cables emitting strong fields (e.g. frequency converter cables).

6.17.4 Unit replacement

A BCU..B1 (for PROFIBUS) may only be replaced by a BCU..B1. BCUs without a PROFIBUS connection may not be replaced by a BCU..B1.

6.17.5 Status and fault messages for PROFIBUS DP

This table can be used to program the master.

Input bytes (BCU → master)			
Byte 2	Display	Status signal Byte 0, Bit 2 = 0	Fault signal Byte 0, Bit 2 = 1
0	00	Start-up position/standby	
0	A0	Cooling	
1	01 A1*	Waiting time/Pause time	Flame simulation
2	02 A2*	Safety time on start-up	Start-up without flame signal
3	03 A3*	Flame proving period	Flame failure during flame proving period
4	04 A4*	Operation	Flame failure during operation
5	05 A5*	Waiting time, main burner	Flame simulation, main burner
6	06 A6*	Safety time on start-up, main burner	Start-up without flame signal, main burner
7	07 A7*	Flame proving period, main burner	Flame failure during flame proving period, main burner
8	08 A8*	Operation, main burner	Flame failure during main burner operation
9	P0	Purge	
10	10		Too many remote resets
30	30	EEPROM data change, NFS**	
31	31	EEPROM data change, FS**	
33	33	Faulty parameterization	

Input bytes (BCU → master)			
Byte 2	Display	Status signal Byte 0, Bit 2 = 0	Fault signal Byte 0, Bit 2 = 1
51	51	Fuse F1 defective or safety interlocks discontinuity	
52	52	Permanent remote reset	
53	53	Timing cycle too short	
99	88		Internal error/negative flame current

* *Display on BCU..L upon activation of the air valve during program step x*

** *FS = input/output, safety circuit, NFS = input/output, control system*

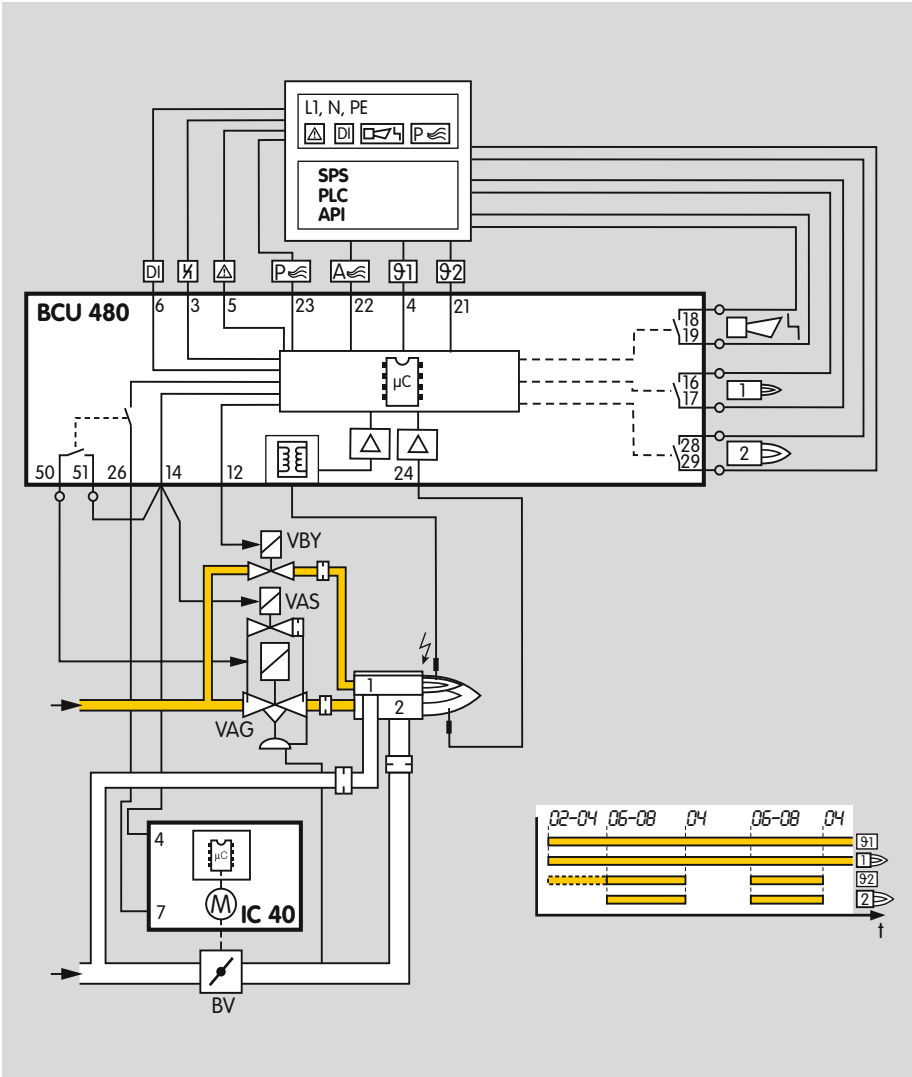

6.18 Third gas valve (can be shut down) on BCU..L

Units with air valve control have an additional contact (terminal), which closes at the same time as the air valve.

This can be used to activate a third gas valve (V3). To do this, the output of valve V1 or V2 must be used as auxiliary energy (as a result of the required flame control).

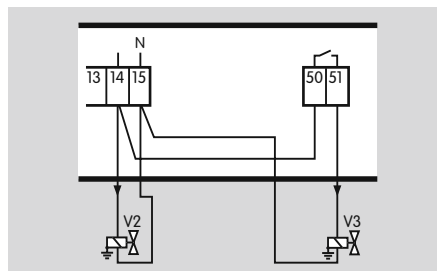

The opposite application describes a two-stage-controlled burner without a pneumatic air/gas ratio control system. The third gas valve (V3) and the air valve are activated simultaneously. During purging/cooling, the gas valve (V3) is not activated.

6.19 BCU switched off

In general, the BCU cannot be activated when no mains voltage is applied or the burner control unit is switched off. The fault signalling contact is only closed when the unit is supplied with voltage and switched on.

If the unit is switched off, an immediate program abort with switch-off of all outputs occurs (even during the safety time). When the unit is switched on, the program run is restarted in standby.

6.20 Furnace control

Switch on the system to start up the furnace, then release the burner start via the safety interlocks and afterwards start the burner control so that the burner control unit may monitor the burners as intended. To shut down the furnace, first disconnect the burner control unit from the temperature control (burner ON signal), then disconnect the safety interlocks and finally switch off the system.

6.21 Mains switch

The mains switch in the unit isolates the BCU on two poles from the mains. It does not meet the requirements of EN 50156-1:2004 (5.2.2 Switch disconnectors) set out in chapter 5 for a device to disconnect the power supply.

Although the mains switch cannot be used for disconnecting from the electrical power supply in accordance with EN 50156, it does allow the burner to be isolated functionally from the central control system. This function is required for manual operation and, in the case of PROFIBUS units, to switch off the unit without causing bus errors.

Disconnection for electrical maintenance work is to be implemented with an external switch per unit or group only, in accordance with Standard EN 50156.

6.22 Note on EC type-examination

Since EN 298 (1993) does not describe all functions of the BCU, the operator is responsible for ensuring that all parameters and functions are matched to the respective application.

6.23 SIL/PL level for thermoprocessing equipment

Since thermoprocessing installations include different safety functions, it is not possible to determine a single SIL/PL level for an entire installation, but this must be determined separately for every safety function of the installation.

See also page 76 (Safety-specific characteristic values).

6.24 Changing parameters

In certain cases, it may be necessary to change the default settings. Using a separate software package and a PC opto-adapter, it is possible to modify certain parameters on the BCU, such as the switch-off threshold of the flame amplifier, the behaviour in the event of a flame failure or whether the pilot burner is to burn permanently in the case of pilot and main burner monitoring.

The software package with PC opto-adapter, as well as "Changed parameters" stickers, are available as accessories, see page 71 (Accessories).

The unit parameters set at the factory are specified in the enclosed delivery note.

Document changed parameters in BCSoft using the protocol function and enclose the protocol with the plant documentation.

If a replacement is ordered for a BCU with changed parameters, refer to the protocol for details.

7 Flame control

7.1 With ionization sensor

The BCU generates an alternating voltage (230 V AC) between the sensing electrode and burner ground. The flame rectifies this voltage. Only the DC signal (> 1 µA) is detected by the burner control unit.

A flame cannot be simulated.

Ignition and monitoring with a single electrode is possible.

For ionization control, the BCU is suitable for Safety Integrity Level SIL 3, see page 76 (Safety-specific characteristic values).

7.2 With UV sensor

A UV tube inside the UV sensor detects the ultraviolet light of a flame. It does not respond to sunlight, incandescent bulb light or infrared radiation emitted by hot workpieces or red-hot furnace walls.

In the event of incident UV radiation, the UV sensor rectifies the supplied alternating voltage. As with ionization control, the burner control unit only detects this DC signal.

When using UV sensors of Type UVS, the burner control unit may be used for intermittent operation only. This means that operation must be interrupted at least once every 24 hours. This can be programmed using parameter 35.

Further information can be found in brochure UVS at www.docuthek.com.

The burner control unit BCU..U is prepared for UV sensor UVD 1. This enables continuous operation.

No safety-specific characteristic values are available for flame control with UVS sensor.

For flame control with UVD sensor, safety-specific characteristic values are available for the Safety Integrity Level SIL.

Further information can be found in TI UVD 1 at www.docuthek.com.

7.3 Via the temperature in high temperature equipment

High temperature equipment is defined as a thermo-processing installation, in which the wall temperature of the combustion chamber and/or the processing chamber exceeds 750°C.

Burner control units BCU..D feature a special "High temperature operation" function, see page 32 (High temperature operation in the case of BCU..D2 or BCU..D3).

During heating up, standard monitoring methods (ionization or UV) must be used for flame control. When the working temperature has exceeded 750°C, indirect flame control can be taken over by a central monitoring device. When the DI input (terminal 6) is activated, the burner control unit reverts to this operating mode.

Important: in "High temperature operation" (HT operation), i.e. with the DI input being activated, burner control units BCU..D do not evaluate the flame signal. The safety function of the burner control unit's flame control is deactivated during this operating phase.

8 Accessories

8.1 High-voltage cable

FZLSi 1/7 up to 180°C,
Order No.: 04250410.

FZLK 1/7 up to 80°C,
Order No.: 04250409.

8.2 Industrial plug connector, 16-pin

Order No.: 74919469

8.3 PROFIBUS plug connector

Variosub PROFIBUS plug connector, 9-pin, with deactivatable bus terminator, Order No.: 74960431

GSD files for BCU Profibus DP on BCSoft CD-ROM, Order No. 74960436, or at www.docuthek.com

Bibliography

- PROFIBUS Specification, EN 50170 Vol. 2 (version 1.0).
- Installation Guideline for PROFIBUS DP/FMS, available from the Profibus User Organization (PUO).
- PROFIBUS Technology and Application, Order No.: 4.001, available from the PUO.
- M. Popp, The New Rapid Way to PROFIBUS DP, a textbook for system operators.
- M. Popp, PROFIBUS DP Principles, Tips and Tricks for Users.
- www.profibus.com

8.4 BCSoft

The current software can be downloaded from our Internet site at http://www.docuthek.com. To do so, you need to register in the DOCUTHEK.

8.4.1 Opto-adapter PCO 200

With USB interface, cable length 3 m, including BCSoft CD-ROM.

Order No.: 74960437.

8.4.2 Bluetooth adapter PCO 300

BCSoft CD-ROM included

Order No.: 74960617.

8.5 “Changed parameters” stickers

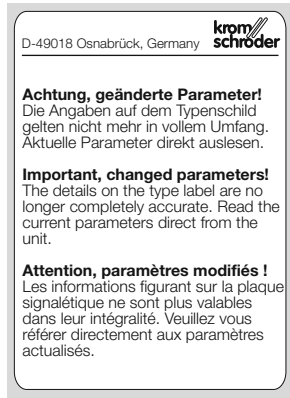

Affix on the connection diagram of the BCU following changes to unit parameters set at the factory.

100 pcs,

Order No.: 74921492.

8.6 External securing bar

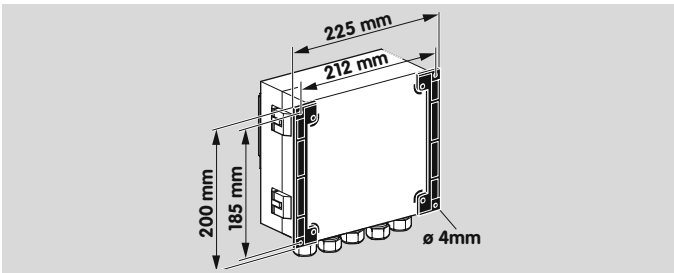

Order No.: 74960414

8.7 Fastening set

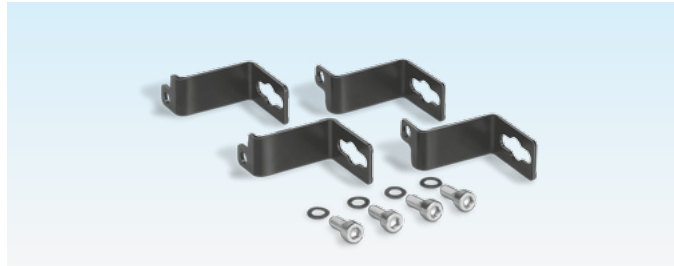

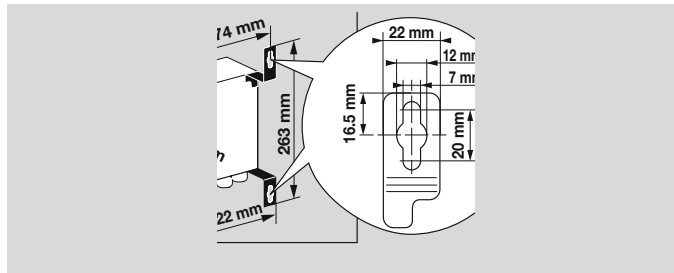

Order No.: 74960422

8.8 Radio interference suppressed electrode plugs

Angle plug, 4 mm, interference-suppressed,
Order No. 04115308.

Straight plug, 4 mm, interference-suppressed,
Order No. 04115307.

Straight plug, 6 mm, interference-suppressed,
Order No. 04115306.

9 Technical data

Mains voltage:
230 V AC, -15/+10%, 50/60 Hz,
115 V AC, -15/+10%, 50/60 Hz,
for grounded and ungrounded mains.

Inherent consumption: approx. 9 VA plus inherent consumption of the integrated ignition transformer [50/60 Hz].

Voltage to inputs and valves = mains voltage.

Signal and control line: max. 2.5 mm^2 (AWG 14).

Cable for burner ground/PE wire: 4 mm^2 (AWG 12).

Cable gland:5 cable glands with multiple seal inserts for 2 cable diameters of up to 7 mm,
BCU..P: with 2 cable glands with multiple seal inserts for 4 cables of up to 7 mm in diameter and an industrial chassis plug.
Each BCU is supplied for two cable glands with one seal insert each for cable diameters between 7 and 12 mm.

Input voltage of signal inputs:

Rated value	115 V AC	230 V AC
Signal "1"	80 – 126.5	160 – 253
Signal "0"	0 – 20	0 – 40
Frequency	50/60 Hz	50/60 Hz

Input current of signal inputs:
Signal "1": typ. 2 mA

Output current:
max. 1 A, cos φ = 1, for the valve outputs (or SRC outputs),
but total current for valves and ignition transformer: max. 2.5 A

Fail-safe inputs and outputs:
All the inputs and outputs marked "■" (see connection diagrams) may be used for safety tasks.

Flame control with UV sensor or ionization sensor.

Flame signal for
ionization control: 1 – 28 µA,
UV control: 1 – 35 µA.

For intermittent or continuous operation.

Maximum length of ignition cable with integrated electronic ignition: 5 m (16.4 ft).
Maximum length of ionization/UV cable: 50 m (164 ft).

Fuses in unit:
F1: 3.15 A, slow-acting, H, pursuant to IEC 127-2/5.
Fuse for protecting the safety-relevant ignition, valve 1, valve 2 and air valve outputs (terminals 7, 12, 14 and 26): 5 A, slow-acting, not replaceable.
F3 (only for BCU.. A, BCU..C and BCU..U):
3.15 A, slow-acting, H, pursuant to IEC 127-2/5.

Operation and fault signalling contacts:
Signalling contact for mains voltage, max. 2 A, 253 V, not internally fused.

Number of operating cycles:
Relay outputs: 250,000 pursuant to EN 298,
Mains switch: 1,000,
Reset/Information button: 1,000.

Ambient temperature: -20 to +60°C (-4 to +140°F), climate: no condensation permitted.

Enclosure: IP 54 pursuant to IEC 529.

Weight: approx. 5 kg (11 lb) depending on version.

Ignition transformer	Input			Output	
	V AC	Hz*	A*	V	mA*
TZI 5-15/100W	230	50 (60)	0.45 (0.35)	5000	15 (11)
TZI 7-25/20W	230	50 (60)	1.1 (0.8)	7000	25 (18)
TZI 7,5-12/100W	230	50 (60)	0.6 (0.45)	7500	12 (9)
TZI 7,5-20/33W	230	50 (60)	0.9 (0.7)	7500	20 (15)
TZI 5-15/100R	115	50 (60)	0.9 (0.7)	5000	15 (11)
TZI 7-25/20R	115	50 (60)	2.2 (1.6)	7000	25 (18)
TZI 7,5-12/100R	115	50 (60)	1.2 (0.9)	7500	12 (9)
TZI 7,5-20/33R	115	50 (60)	1.8 (1.35)	7500	20 (15)

** Values in ( ) apply to 60 Hz.*

9.1 BCU..B1

External fuse: 12 A per zone.

9.2 PROFIBUS DP

Manufacturer ID: 0x05DB.

ASIC type: SPC3.

SYNC- and FREEZE-capable.

Baud rate detection: automatic.

Min. cycle time: 0.1 ms.

Diagnostic bytes: 6 (DP Standard).

Parameter bytes: 7 (DP Standard).

9.3 Safety-specific characteristic values

In the case of ionization control, suitable for Safety Integrity Level	SIL 3
Diagnostic coverage DC	92.7%
Type of subsystem	Type B to EN 61508-2, 7.4.3.1.4
Mode of operation	High demand mode pursuant to EN 61508-4, 3.5.12
Mean probability of dangerous failure PFH_D	1.92×10^{-8} 1/h
Mean time to dangerous failure $MTTF_d$	$MTTF_d = 1 / PFH_D$
Safe failure fraction SFF	98.8%

The specified values apply for the combination with ionization electrode (sensor) and a unit of the BCU 400 series. No characteristic values are available for flame control with UVS sensor.

For flame control with UVD sensor, safety-specific characteristic values are available for the Safety Integrity Level SIL. Further information can be found in TI UVD 1 at www.docuthek.com.

Relationship between the Performance Level (PL) and the Safety Integrity Level (SIL)

PL	SIL
a	–
b	1
c	1
d	2
e	3

Pursuant to EN ISO 13849-1:2006, Table 4, the BCU can be used up to PL e.

Max. service life under operating conditions: 20 years after date of production.

For a glossary of terms, see page 79 (Glossary).

For further information on SIL/PL, see www.k-sil.de

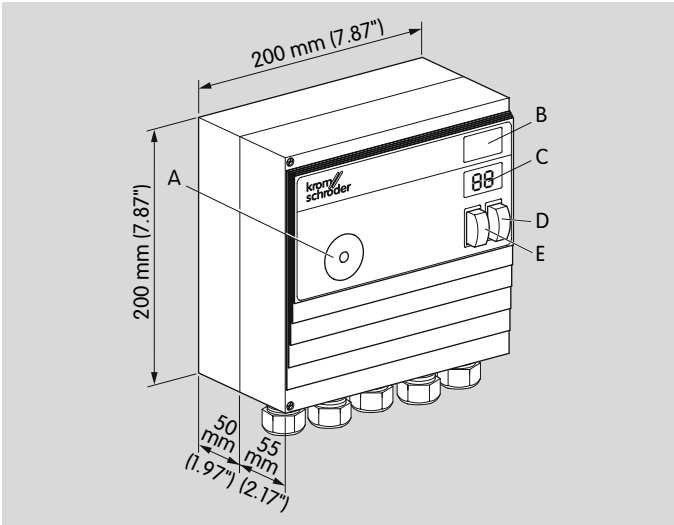

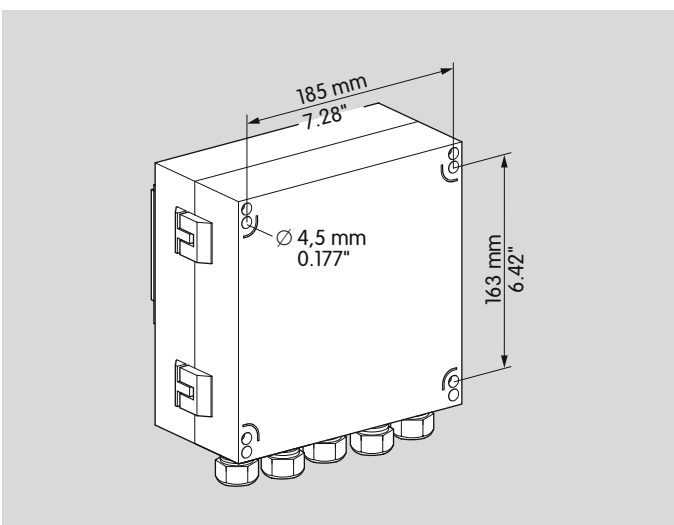

9.4 Housing dimensions

Die-cast aluminium housing with plug-in terminal blocks and plug-in M20 cable glands or (16-pin) industrial plug connector for input signals and optionally pre-assembled cables for output signals.

9.5 Operating controls

A: Optical interface.

B: Labelling field for individual labelling of the system components.

C: 2-digit 7-segment display.

D: Mains switch to isolate the BCU on two poles from the mains.

E: Reset/Information button to reset the system after a fault or to scan parameters on the display.

9.6 Installation

Recommended installation position: vertical (cable glands pointing downwards).

Open the BCU and attach with four screws Ø 4 mm or screw on the closed unit using the external securing bar, see page 71 (Accessories).

Electrical connection via plug-in connection terminals (2.5 mm²) and plug-in cable glands. The latter can be removed in order to facilitate installation. When installing, ensure that there is sufficient space to open the BCU.

10 Legend

88	Display
88	Blinking display
⏻	Ready
⚠	Safety interlocks (Limits)
θ1	Start-up signal, pilot burner
θ2	Start-up signal, main burner
DI	Digital input
ϟ	Ignition transformer
	Gas valve
	Air valve
P	Purge
A	Ext. air valve control
	Flame signal
1	Operating signal, pilot burner
2	Operating signal, main burner
	Fault signal
↯	Reset
◀	Input signal
▶	Output signal
	Flame simulation check
t_W	Waiting time ≥ 2 s
t_{SA}	Safety time on start-up 3 s, 5 s or 10 s
t_{SB}	Safety time during operation < 1 s or < 2 s
t_Z	Ignition time 2 s, 3 s or 6 s
t_{LV}	Flame simulation delay time 25 s
t_{FS}	Flame proving period 0 – 25 s

t_B	Minimum burner on time t_{SA} up to max. 25 s
t_{BP}	Minimum burner pause time 0 – 250 s
t_{KN}	Low fire over-run time 0 s, 5 s, 15 s or 25 s
	Input/Output, safety circuit

11 Glossary

11.1 Waiting time t_W

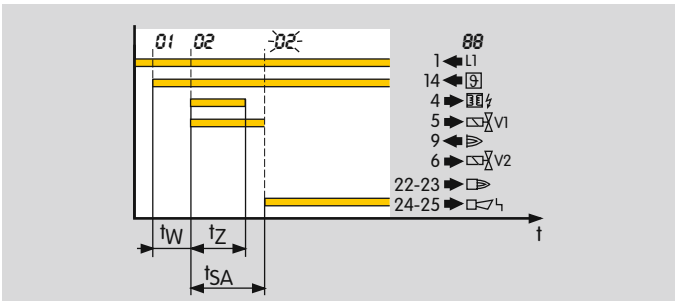

Once the start-up signal ϑ has been applied, the waiting time t_W starts to elapse. During this time, a self-test is conducted to detect errors in internal and external circuit components. If no malfunction is detected, the burner will start up.

11.2 Safety time on start-up t_{SA}

This refers to the period of time between switching on and switching off of the pilot gas valve V1, when no flame signal is detected. The safety time on start-up t_{SA} (3, 5 or 10 s) is the minimum operating time of the burner and automatic burner control unit.

11.3 Ignition time t_Z

If no malfunction is detected during the waiting time t_W, the ignition time t_Z then starts to elapse. Voltage is supplied to the pilot gas valve V1 and the ignition transformer and the burner is ignited. The duration of the ignition time is either 2, 3 or 7 seconds depending on safety time t_{SA} selected.

11.4 Flame simulation/Flame simulation delay time t_{LV}

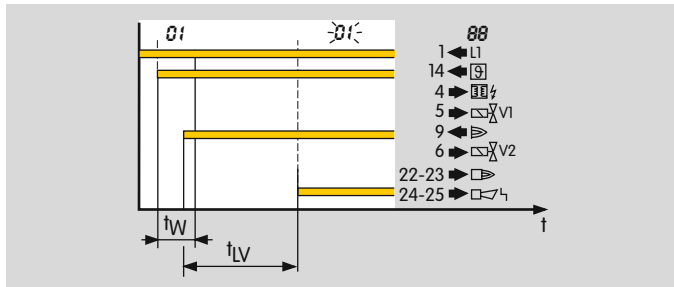

An extraneous signal (flame simulation) is a flame signal that is detected, although there should be no flame according to the program sequence. If such an extraneous signal is detected, the flame simulation delay time t_{LV} starts to elapse. If the flame simulation is discontinued during the flame simulation delay time t_{LV}, start-up can be initiated or operation continued. Otherwise, a fault lock-out occurs.

11.5 Safety time during operation t_{SB}

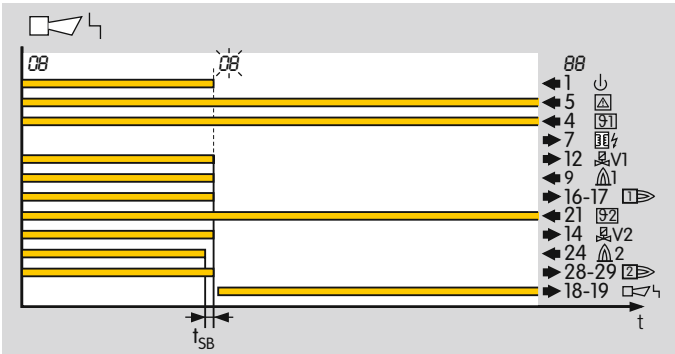

If the flame fails during operation, the valve outputs are disconnected within the safety time t_{SB}.

The default safety time during operation t_{SB} in accordance with EN 298 is 1 second. In accordance with EN 746-2, the safety time of the installation during operation (including closing time of the valves) may not exceed 3 s.
Note the requirements of the Standards!

11.6 Flame signal

If a flame is detected, the flame detector will supply a flame signal.

11.7 Fault lock-out

In the event of a fault lock-out, all valves and the ignition transformer are disconnected from the electrical power supply, and a fault is signalled. Resetting must take place manually following a fault lock-out.

11.8 Safety interlocks (Limits)

The limiters in the safety interlock (linking of all the relevant safety control and switching equipment for the use of the application, e.g. safety temperature limiter, minimum/maximum gas pressure) must isolate input ⚠ from the voltage supply.

11.9 Pilot gas valve V1

The start fuel flow rate for the pilot burner is released by pilot gas valve V1. It opens when the safety time on start-up t_{SA1} starts to elapse. It remains open until the burner is switched off again by a controlled shut-down or fault lock-out.

11.10 Main gas valve V2

The start fuel flow rate for the main burner is released by main gas valve V2. It opens when the safety time on start-up t_{SA2} starts to elapse. It remains open until the burner is switched off again by a controlled shut-down or fault lock-out.

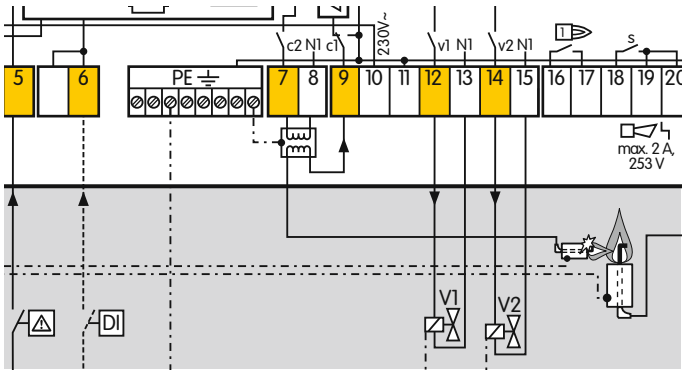

11.11 Continuous operation

The gas burner runs continuously for more than 24 hours.

11.12 Air valve

The air valve can be used

- for cooling,
- for purging,
- to control the burner capacity in ON/OFF mode and in High/Low mode when using a pneumatic air/gas ratio control system.

11.13 Diagnostic coverage DC

Measure of the effectiveness of diagnostics, which may be determined as the ratio between the failure rate of detected dangerous failures and the failure rate of total dangerous failures

NOTE: Diagnostic coverage can exist for the whole or parts of a safety-related system. For example, diagnostic coverage could exist for sensors and/or logic system and/or final elements. Unit: %.

from EN ISO 13849-1:2008

11.14 Mode of operation

High demand mode or continuous mode

Operating mode, where the frequency of demands for operation made on a safety-related system is greater than one per year or greater than twice the proof-test frequency

from EN 61508-4:2001

11.15 Safe failure fraction SFF

Fraction of safe failures related to all failures, which are assumed to appear

from EN 13611/A2:2011

11.16 Probability of dangerous failure PFH_D

Value describing the likelihood of dangerous failure per hour of a component for high demand mode or continuous mode. Unit: 1/h.

from EN 13611/A2:2011

11.17 Mean time to dangerous failure $MTTF_d$

Expectation of the mean time to dangerous failure

from EN ISO 13849-1:2008

Feedback

Finally, we are offering you the opportunity to assess this “Technical Information (TI)” and to give us your opinion, so that we can improve our documents further and suit them to your needs.

Clarity

- ○ Found information quickly
- ○ Searched for a long time
- ○ Didn’t find information
  What is missing?
- ○ No answer

Comprehension

- ○ Coherent
- ○ Too complicated
- ○ No answer

Scope

- ○ Too little
- ○ Sufficient
- ○ Too wide
- ○ No answer

Use

- ☐ To get to know the product
- ☐ To choose a product
- ☐ Planning
- ☐ To look for information

Navigation

- ○ I can find my way around
- ○ I got “lost”
- ○ No answer

My scope of functions

- ○ Technical department
- ○ Sales
- ○ No answer

Remarks

Contact

Elster GmbH
Postfach 2809 · 49018 Osnabrück
Strotheweg 1 · 49504 Lotte (Büren)
Germany
Tel +49 541 1214-0
Fax +49 541 1214-370
info@kromschroeder.com
www.kromschroeder.com

The current addresses of our international agents are available on the Internet:
www.kromschroeder.de/Weltweit.20.0.html?&L=1

We reserve the right to make technical modifications in the interests of progress.

Copyright © 2016 Elster GmbH
All rights reserved.

03250692